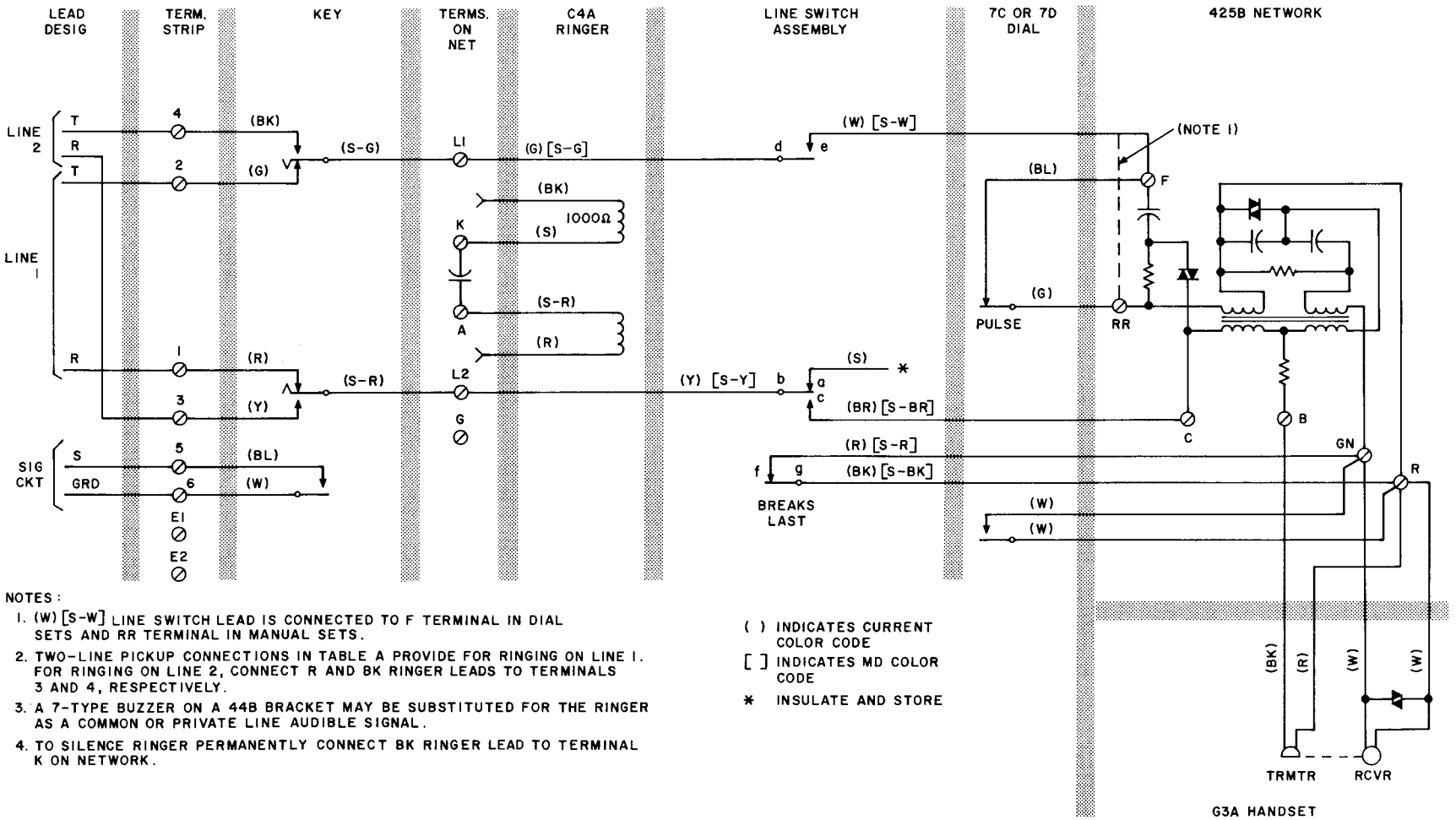

NOTES:

1. (W) [S-W] LINE SWITCH LEAD IS CONNECTED TO F TERMINAL IN DIAL SETS AND RR TERMINAL IN MANUAL SETS.
2. TWO-LINE PICKUP CONNECTIONS IN TABLE A PROVIDE FOR RINGING ON LINE 1. FOR RINGING ON LINE 2, CONNECT R AND BK RINGER LEADS TO TERMINALS 3 AND 4, RESPECTIVELY.
3. A 7-TYPE BUZZER ON A 44B BRACKET MAY BE SUBSTITUTED FOR THE RINGER AS A COMMON OR PRIVATE LINE AUDIBLE SIGNAL.
4. TO SILENCE RINGER PERMANENTLY CONNECT BK RINGER LEAD TO TERMINAL K ON NETWORK.

( ) INDICATES CURRENT COLOR CODE

[ ] INDICATES MD COLOR CODE

* INSULATE AND STORE

558A and B Telephone Sets, 2-Line Pickup and Signaling