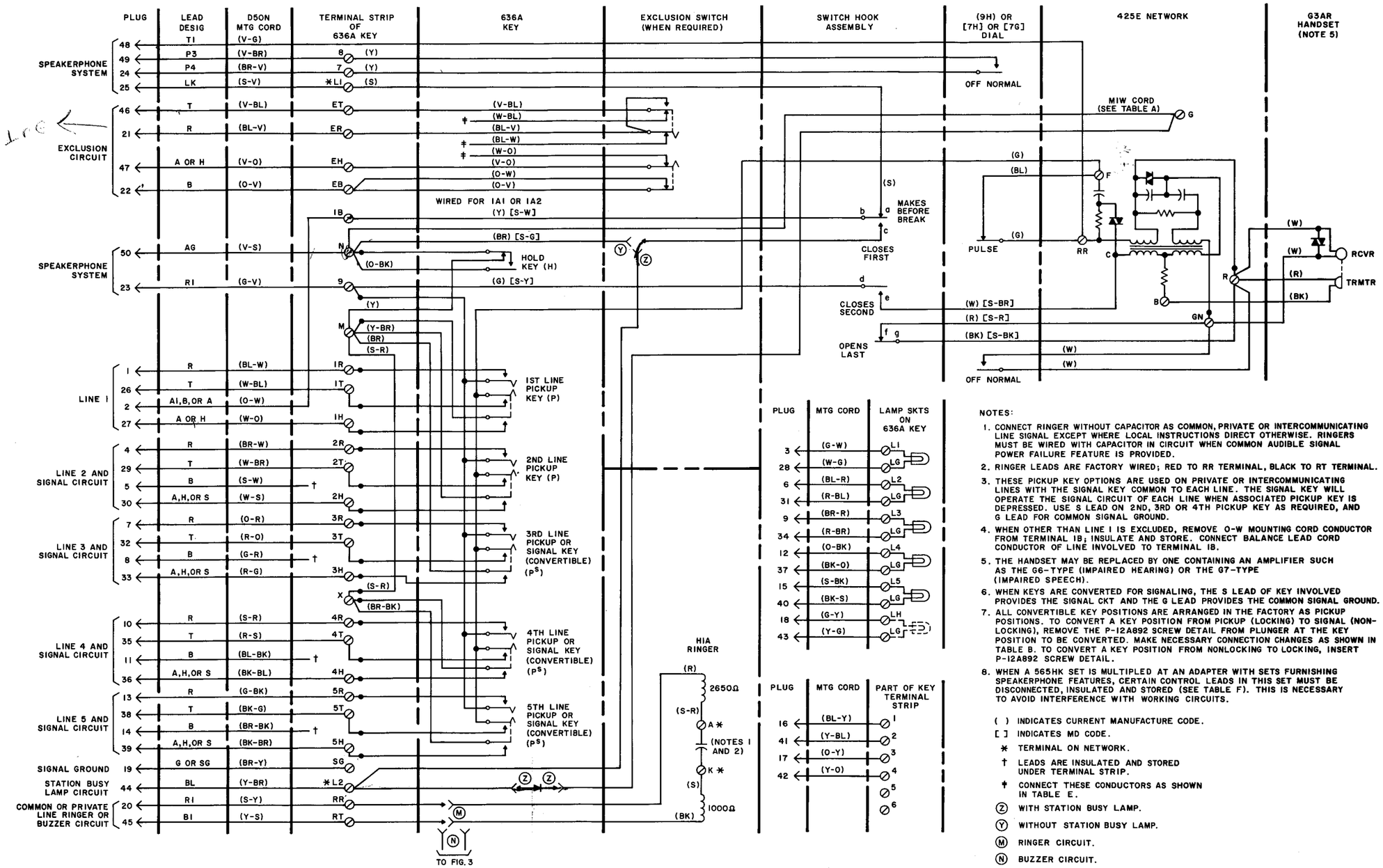

NOTES:

1. CONNECT RINGER WITHOUT CAPACITOR AS COMMON, PRIVATE OR INTERCOMMUNICATING LINE SIGNAL EXCEPT WHERE LOCAL INSTRUCTIONS DIRECT OTHERWISE. RINGERS MUST BE WIRED WITH CAPACITOR IN CIRCUIT WHEN COMMON AUDIBLE SIGNAL POWER FAILURE FEATURE IS PROVIDED.
2. RINGER LEADS ARE FACTORY WIRED; RED TO RR TERMINAL, BLACK TO RT TERMINAL.
3. THESE PICKUP KEY OPTIONS ARE USED ON PRIVATE OR INTERCOMMUNICATING LINES WITH THE SIGNAL KEY COMMON TO EACH LINE. THE SIGNAL KEY WILL OPERATE THE SIGNAL CIRCUIT OF EACH LINE WHEN ASSOCIATED PICKUP KEY IS DEPRESSED. USE S LEAD ON 2ND, 3RD OR 4TH PICKUP KEY AS REQUIRED, AND G LEAD FOR COMMON SIGNAL GROUND.
4. WHEN OTHER THAN LINE 1 IS EXCLUDED, REMOVE O-W MOUNTING CORD CONDUCTOR FROM TERMINAL 1B; INSULATE AND STORE. CONNECT BALANCE LEAD CORD CONDUCTOR OF LINE INVOLVED TO TERMINAL 1B.
5. THE HANDSET MAY BE REPLACED BY ONE CONTAINING AN AMPLIFIER SUCH AS THE G6-TYPE (IMPAIRED HEARING) OR THE G7-TYPE (IMPAIRED SPEECH).
6. WHEN KEYS ARE CONVERTED FOR SIGNALING, THE S LEAD OF KEY INVOLVED PROVIDES THE SIGNAL CKT AND THE G LEAD PROVIDES THE COMMON SIGNAL GROUND.
7. ALL CONVERTIBLE KEY POSITIONS ARE ARRANGED IN THE FACTORY AS PICKUP POSITIONS. TO CONVERT A KEY POSITION FROM PICKUP (LOCKING) TO SIGNAL (NON-LOCKING), REMOVE THE P-12A892 SCREW DETAIL FROM PLUNGER AT THE KEY POSITION TO BE CONVERTED. MAKE NECESSARY CONNECTION CHANGES AS SHOWN IN TABLE B. TO CONVERT A KEY POSITION FROM NONLOCKING TO LOCKING, INSERT P-12A892 SCREW DETAIL.
8. WHEN A 565HK SET IS MULTIPLED AT AN ADAPTER WITH SETS FURNISHING SPEAKERPHONE FEATURES, CERTAIN CONTROL LEADS IN THIS SET MUST BE DISCONNECTED, INSULATED AND STORED (SEE TABLE F). THIS IS NECESSARY TO AVOID INTERFERENCE WITH WORKING CIRCUITS.

( ) INDICATES CURRENT MANUFACTURE CODE.
[ ] INDICATES MD CODE.
* TERMINAL ON NETWORK.
† LEADS ARE INSULATED AND STORED UNDER TERMINAL STRIP.
‡ CONNECT THESE CONDUCTORS AS SHOWN IN TABLE E.
(Z) WITH STATION BUSY LAMP.
(Y) WITHOUT STATION BUSY LAMP.
(M) RINGER CIRCUIT.
(N) BUZZER CIRCUIT.

Fig. 1 — 565HK Telephone Set, Connections