From Irish P&T
Wiring is Different From
North American Sets

Scanned by John Mulrane

N.E.I. - 500 & N.E.I. - 554 TYPE TELEPHONE SET SCHEMATIC

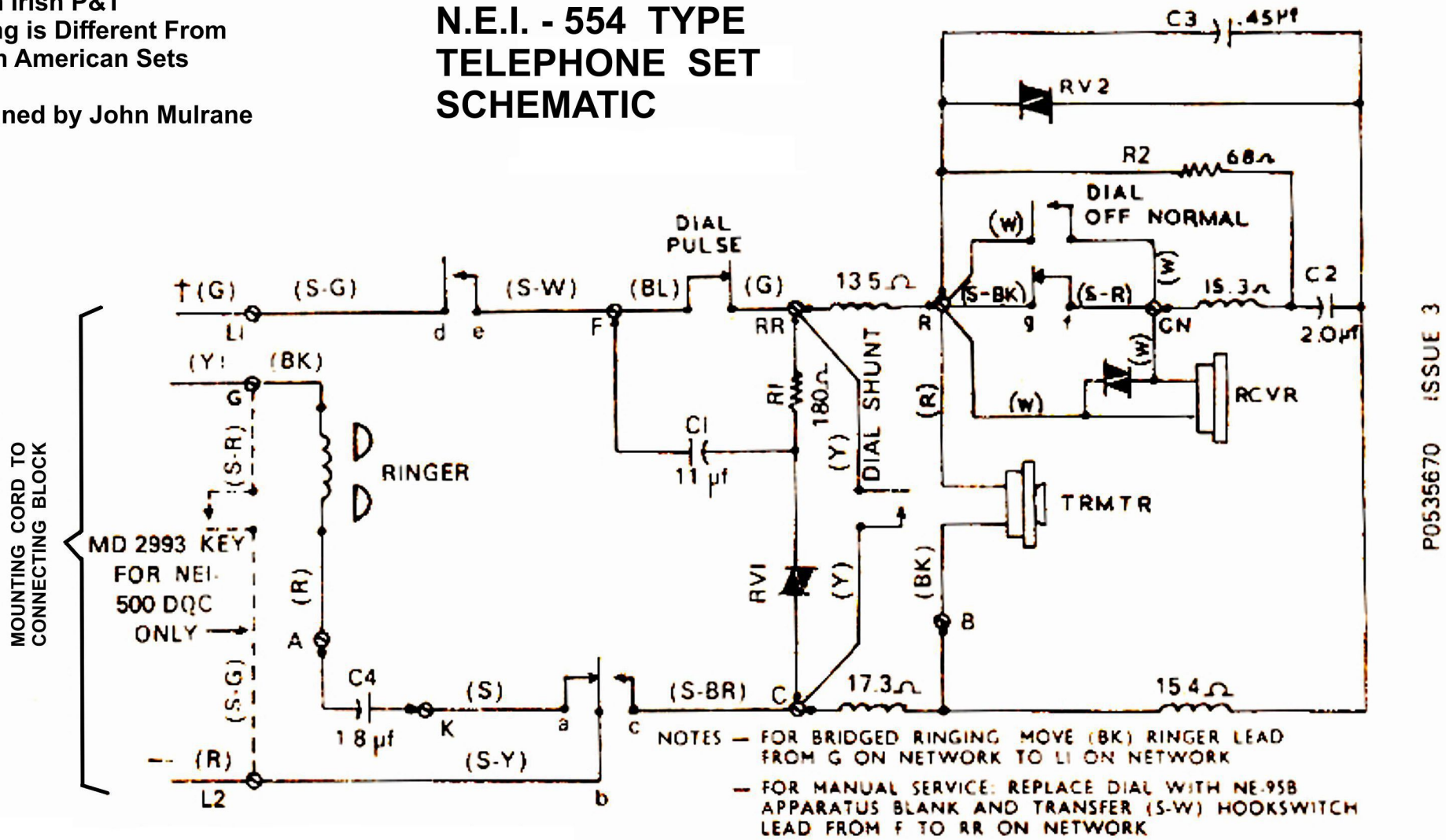

A number of differences from the North American NE 500-type sets are as follows;

- No 22 ohm resistor between terminal B and the junction of terminals 3 and 8 of the induction coil.

- Ringer circuit is isolated from the line in the off hook condition; Ringer is Single coil, 1000 ohms; Ringing capacitor (between A & K) is 1.8uF (not 0.45uF).

TCI Library: www.telephonecollectors.info

NE500-type sets as supplied to the Irish P&T, Assembled in Galway, Built to P&T specification using standard components when suitable.
Scanned by John Mulrane.

ISSUE & DATE	
A	5-11-74
B	7-5-76

Oifig an Phrimh Innealtóra
Brainse na hInneallóireachta
An Roinn Poist agus Teleagrafa

A4

NOTES. 1. Cord colours are in brackets. The other letters refer to connections on network block NE-425 QE1.

2. When an extension bell is required it can be connected across B.T.1, B.T.2 with the yellow wire removed to B.T.2.

3. For CB working omit dial, strap F and RR together.

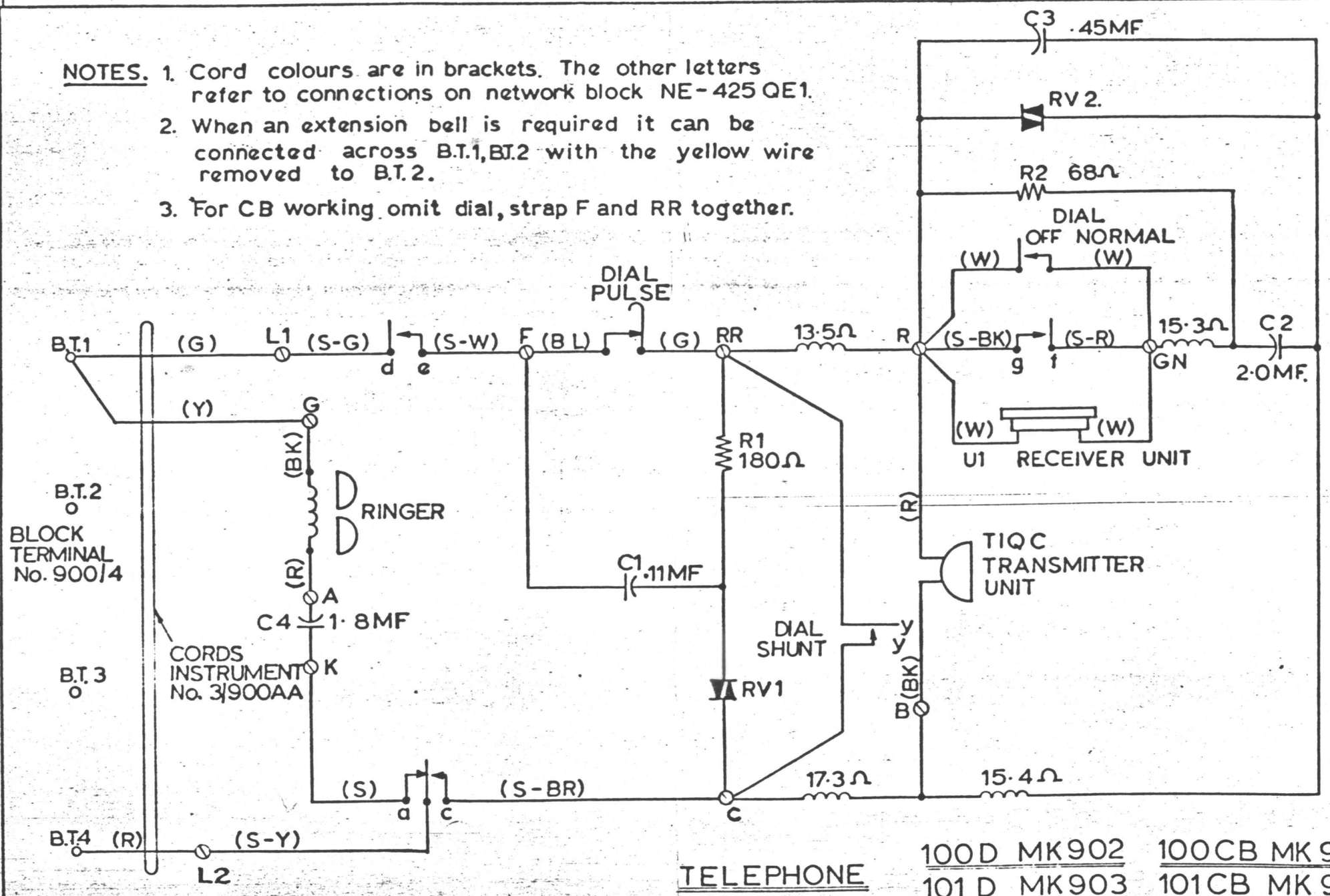

TELEPHONE

100D MK902 100CB MK 900
101 D MK903 101CB MK 901

Drn.:- T.A. Walsh
Date:- 22.8.74
Chkd.:-
Appvd.:-

Drawing No
TX 5424

TCI Library: www.telephonecollectors.info