NORTHERN ELECTRIC TYPE 181 PREPAYMENT PAYSTATION

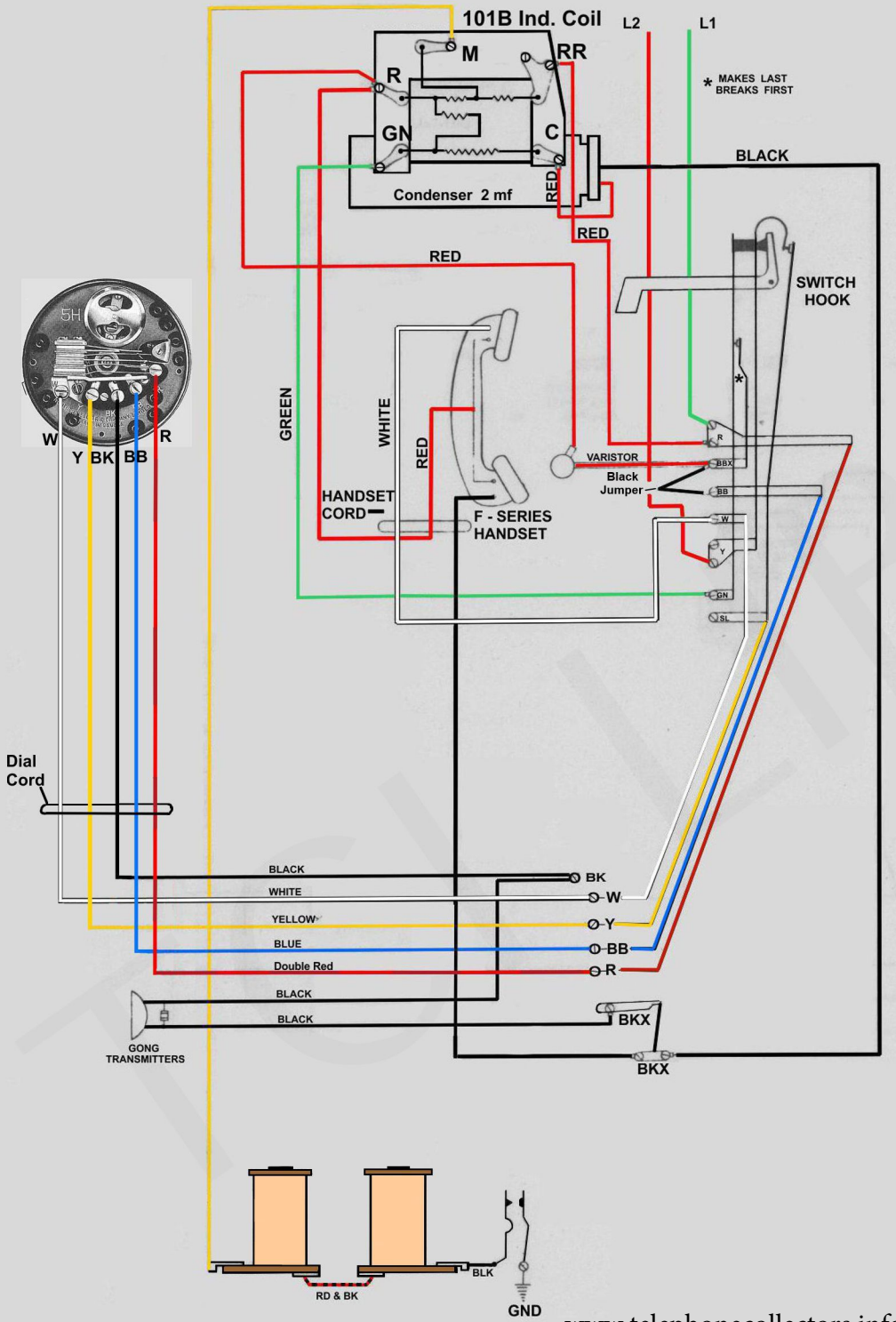

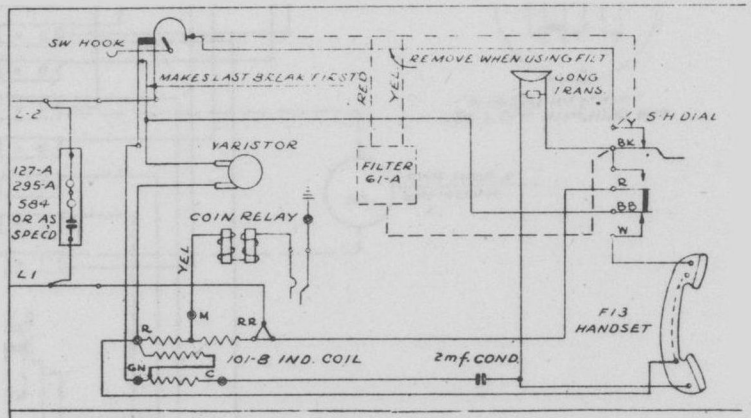

181 PREPAYMENT PAYSTATION
WITH
127-A, 295-A, 584 BELLS

www.telephonecollectors.info