[redacted]

BELL SYSTEM CAPACITORS

The information in this Section has been prepared primarily for the use of Bell Telephone Laboratories technical people as an aid in development work. It is believed, however, that much of the information will be valuable to engineering people of the Telephone Companies. This Section will be kept up to date by means of addenda or revisions as required.

Prepared by the
Bell Telephone Laboratories, Inc.
Murray Hill, N. J.

Copyright, 1956, by American Telephone and Telegraph Company
Printed in U.S.A.

TCI Library www.telephonecollectors.info

TABLE OF CONTENTS

1. Introduction

2. Card Catalog Ratings

3. Data and Index Tables

INDEX TABLES

Coded Type Capacitors

KS Specification Capacitors

TCI Library www.telephonecollectors.info

BELL SYSTEM CAPACITORS

1. INTRODUCTION

This is one of the series of Engineering Reference Data Bulletins. It contains information on capacitors designed by the Bell Telephone Laboratories for Bell System applications and manufactured by the Western Electric Company or by other suppliers in accordance with specifications prepared by the Laboratories. It is intended for use by engineers of the Laboratories. Items currently rated Manufacture Discontinued are not included.

The information given herein is intended to aid in development work. For any specific circuit arrangement, however, consideration should be given to the possible existence of new designs which may be smaller or less expensive, or may have more desirable characteristics.

TO OBTAIN THE LATEST INFORMATION AND COMPLETE CHARACTERISTICS FOR ANY APPLICATION, CONSULT THE CAPACITOR DEVELOPMENT DEPARTMENT.

Information on contact protection networks is also included. These networks consist of various combinations of capacitors and resistances assembled together.

All capacitors listed are PREFERRED types except those designated NON-PREFERRED. Non-preferred types are so described because they are highly specialized, of limited application, of an obsolescent type or relatively expensive. They should not be used in new applications.

2. CARD CATALOG RATINGS

It is planned to bring this bulletin up-to-date periodically. However, the information contained herein may not be complete and catalog ratings of the items are not shown. The information should be supplemented by reference to the usual sources such as the Western Electric Apparatus Card Catalog, the manufacturing specifications and price data. For information regarding the output of apparatus refer to the Western Electric Report A-822.1.

The bulletin may include some codes of apparatus for which cards will not be found in the Western Electric Apparatus Card Catalog. Such codes are in general rated "Component Part." This rating is applied to apparatus where it is believed that the associated telephone companies will have no need for apparatus card catalog information and orders for the apparatus from the field are not expected.

When apparatus which is not listed on a white card in the Western Electric Apparatus Card Catalog is selected for use in new applications, the Standards Engineer, Dept. 5241, Bell Telephone Laboratories, 463 West Street, New York should be notified of the new use and probably demand so that consideration can be given to rerating the apparatus. When such new applications are to be made, the selection should first be discussed with the Capacitor Development Department.

3. DATA AND INDEX TABLES

Both coded and KS specification capacitors are included in this bulletin. Detailed information on the capacitance values, principal applications, mechanical form, dimensions, characteristics and circuit arrangements are given in the data tables. The capacitors are arranged in order of their capacitance values on each table to facilitate selection.

To aid in locating the information pertaining to a given type of capacitor, lists of the tables, by types, are given in the first pages of the bulletin. To aid in locating details of a capacitor when the code or KS number is given, index tables 101 and 103 are included.

PREFERRED NUMBERS (capacitance values) are given in Table 100. These should be used when capacitors are to be supplied with specified values of capacitance. Capacitance values should be limited, insofar as possible, to these preferred numbers because of manufacturing economies.

TCI Library www.telephonecollectors.info

TCI Library www.telephonecollectors.info

LIST OF TABLES
CODED TYPE CAPACITORS

PAPER

Table	Description	Capacitance - mf Max	Min
1.01	Aroclor, stud mounted	35	0.850
1.02	Mineral oil, stud mounted	10.3	0.003
1.03	Metallized, rectangular, tubular	5.0	0.020
1.04	Wax, stud mounted, 1 section	5.0	0.005
1.05	Wax, stud mounted, 2-3 sections	4.36	0.005
1.06	Wax, strap mounted	4.36	0.050
1.07	Stud mounted, balanced pairs	4.36	0.012
1.08	Tubular	2.4	0.008
1.09	Interference prevention, by pass	0.15	0.006
1.10	Ten section, stud mounted, building out	0.002	0.0005
1.11	Precision, F, 1 section, moderate Q	4.3	0.0019
1.12	Precision, F, 2-3 sections, moderate Q	1.2	0.006
1.13	Precision, stud mounted	0.914	0.0059
1.14	Precision, C, 1 section, high Q	0.71	0.001
1.15	Precision, C, 2-3 sections, high Q	0.54	0.0007
1.16	Precision, C, lug mounted	0.15	0.001

PLASTIC

Table	Description	Capacitance - mf Max	Min
2.01	Mylar, stud mounted and tubular	2.50	0.034
2.02	Mylar, lacquer coated	0.625	0.012
2.03	Mylar, lacquer coated	0.60	0.001

MICA

Table	Description	Capacitance - mmf Max	Min
3.01	Precision potted silvered, A, lugs, 1 section	493,000	22
3.02	Precision potted silvered, B, 1 section	329,600	89
3.03	Precision potted silvered, B, 2-3 sections	388,000	1096
3.04	Molded silvered, pigtails or terminals	40,000	2.5
3.05	Potted silvered, studs or lugs, 2-8 sections	22,000	5.0

VARIABLE

Table	Description	Capacitance - mmf Max	Min
4.01	Miscellaneous	820	23.0
4.02	Trimmers, air, tubular glass	325	2.0
4.03	Differential	75	3.7

CONTACT PROTECTION NETWORKS

Table	Description	Max	Min
7.01	Contact Protection Networks		
	Capacitance, mf	1.25	0.10
	Resistance, ohms	1000	100

TCI Library www.telephonecollectors.info

KS SPECIFICATION CAPACITORS

PAPER

Table	Description	Capacitance - mf Max	Capacitance - mf Min
11.01	Miscellaneous large rectangular	50	0.1
11.02	Large rectangular, brackets	12	0.1
11.03	Rectangular and bathtub, AC	10	0.135
11.05	Tubular, single hole mounting	4	0.25
11.06	Bathtub, 1-3 sections	1.0	0.05
11.07	Bathtub, 1-3 sections	1.0	0.05
11.08	Tubular, subminiature	1.0	0.001
11.09	Hearing aid	1.0	0.00035
11.10	Rectangular, brackets, 1-2 sections	0.5	0.01
11.11	Rectangular, brackets, 1-3 sections	0.50	0.01
11.12	Tubular by pass	0.47	0.0075
11.13	Molded, tubular and postage stamp	0.20	0.027
11.14	Molded tubular, pigtails	0.15	0.00047
11.15	Tubular, pigtails	0.10	0.003

GENERAL

Table	
100	Preferred Numbers
101	Index by Code Numbers
103	Index by KS Numbers

MICA

Table	Description	Capacitance - mmf Max	Capacitance - mmf Min
13.01	Potted silvered, lugs or screws	100,000	47
13.02	Molded, screws or pigtails	47,000	2
13.04	Button type	6,000	10

VARIABLE

Table	Description	Capacitance - mmf Max	Capacitance - mmf Min
14.01	Miscellaneous transmitting	1250	94
14.02	Miscellaneous	446	0.5
14.03	Straight line capacitance or frequency	320	5.5
14.04	Trimmers, air	129	0.7
14.05	Trimmers, air	99	15.5
14.06	Trimmers, miniature, air	18.7	4.5
14.07	Trimmers, ceramic	45	0.7

ELECTROLYTIC

Table	Description	Capacitance - mf Max	Capacitance - mf Min
15.01	Aluminum, 1-3 sections	7500	5
15.02	Tantalum	250	1

CERAMIC

Table	Description	Capacitance - mmf Max	Capacitance - mmf Min
16.01	Tubular, non-insulated, pigtails	15,000	0.5
16.02	Disc, wires	10,000	1500
16.04	Tubular, insulated, pigtails	3,900	0.75
16.05	Feed-through, screw	1,500	5.0
16.06	Stand-off, threaded	1,000	0.5
16.07	Tubular, paired insulated, pigtails	51	0.5

TCI Library www.telephonecollectors.info

DESCRIPTION

Paper capacitors, impregnated with Aroclor (chlorinated diphenyl), in hermetically sealed rectangular metal cans.

Principal Applications: Power Supply Filters.

Operating Temperature Range: -50° to +85°C.
-58° to +185°F.

AC ripple voltages on the capacitors should not exceed 15 percent of the d-c working voltages listed below.

These capacitors are also suitable for use with 60-cycle voltages at ratings which can be obtained from the capacitor development department.

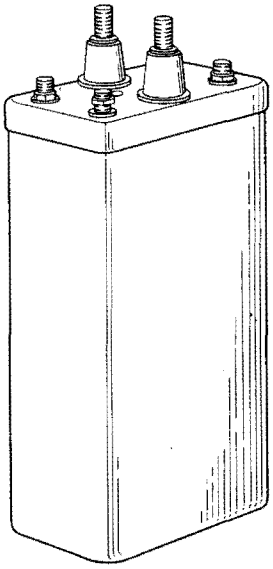

Code	Dimensions - Inches			Mounting
	Width	Depth	Height	
287, 288, 306	1-21/32	1-1/2	3-29/32	Stud
289, 290,291	2-13/32	1-15/32	4-3/4	Stud
293, 294, 295, 296	4-15/16	1-1/2	4-3/4	Stud
302	5-3/4	4-17/32	3-31/32	Angle brackets.
303	7-3/8	4-15/16	13-17/32	Bottom plate
304	4-15/16	2-1/4	6-1/8	Special bracket.

CAPACITANCES

Code	Capacitance - mf		DC Working Voltages	Remarks
	Max.	Min.		
304A	35.0	25.0	50	
293B	18.5	16.5	400	
302A	20.4	15.6	600	
293A	18.4	13.6	400	
287B	8.8	7.2	50	
289C	7.7	7.0	400	
294A	9.2	6.8	600	
293C	8.0 8.0	6.6 6.6	400	Common terminal.
289A	8.05	5.95	400	
303A	6.9	5.1	2700	
295A	5.75	4.25	1000	
287A	4.6	3.4	400	
290A	4.0	3.0	600	
289D	3.4 3.4	3.0 3.0	400	Common terminal.
289B	3.45 3.45	2.55 2.55	400	Common terminal.
296A	3.5	2.5	1200	
291A	2.9	2.1	1000	
288A	2.3	1.7	600	
306A	1.15	0.85	1000	

TCI Library www.telephonecollectors.info

TCI Library www.telephonecollectors.info

DESCRIPTION

Paper capacitors, impregnated with oil, in hermetically sealed rectangular metal cans.

Principal Applications: Filters for power supplies and carrier systems where relatively high temperatures and voltages may be encountered.

Operating Temperature Range: -50° to +85°C.
-58° to +185°F.

AC working voltages, except as otherwise noted, should be limited to ripple voltages which do not exceed 15 percent of the working dc voltages listed below.

CAPACITANCES

SINGLE UNIT TYPES

Code	Capacitance - mf		Working Voltages		Remarks
	Maximum	Minimum	DC	AC*	
268C	10.3	9.7	250	180	
268A	11.5	8.5	250	180	Gray can.
268B	11.5	8.5	250	180	Black can.
268D	11.5	8.5	250	180	170-230 mmf to can.
485A	7.14	6.46	600	-	
486A	4.41	3.99	600	-	
231A	3.45	2.55	250	-	
267A	2.87	2.13	600	-	
228B	2.27	2.13	250	-	
482G	2.00	1.80	250	200	
228A	2.30	1.70	250	-	
232B	2.00	1.65	250	-	
229A	1.725	1.275	250	-	
482F	1.24	1.12	250	200	
482C	1.05	0.95	400	-	
226A	1.15	0.85	600	-	
229C	1.15	0.85	250	-	
481K	0.848	0.752	250	200	
480A	0.90	0.70	250	-	
338A	Nominal	0.70	250	-	
490A	0.802	0.698	400	-	
481H	0.767	0.693	250	200	
481J	0.721	0.679	250	200	
483E	0.721	0.679	150	-	
259A	0.81	0.60	250	-	Lugs midway
233A	0.81	0.60	250	-	Bottom lugs
227A	0.575	0.425	600	-	
330D	0.575	0.425	600	-	
230A	Nominal	0.40	250	-	
483A	0.412	0.388	400	300	
481F	0.385	0.335	600	-	
364A	0.44	0.32	250	-	
234H	0.20	0.18	600	-	
364B	0.186	0.175	600	-	
234T	0.186	0.175	600	-	
234G	0.170	0.160	600	-	
234A	0.23	0.16	600	-	
234F	0.1401	0.1319	600	-	
234S	0.130	0.122	600	-	
484A	0.126	0.114	600	-	
234B	0.105	0.095	600	-	
234E	0.101	0.095	600	-	
234R	0.0993	0.0935	600	-	
234P	0.0960	0.0904	600	-	
234N	0.0937	0.0883	600	-	
234M	0.0923	0.0869	600	-	
234C	0.115	0.085	600	-	
481G	0.0566	0.0533	-	850	
234L	0.0550	0.0518	600	-	
234D	0.0458	0.0432	600	-	
495A	0.0416	0.0376	-	2000	
234K	0.0331	0.0311	600	-	
234J	0.0255	0.0240	600	-	
483D	0.02115	0.01995		850	
494A	0.01605	0.0145	-	2000	
494B	0.00942	0.00852	-	2000	
230B	0.0115	0.0085	600	-	
483C	0.006210	0.005850	-	850	
483B	0.003415	0.003215	-	850	

*At frequencies of 60cps or less

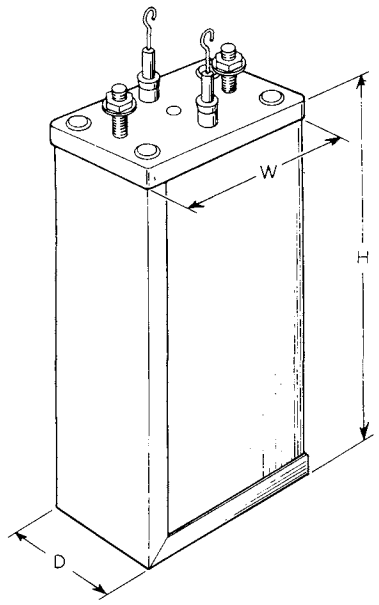

Code	Dimensions - Inches			Mounting
	W	D	H	
226, 228, 231, 482	1-21/32	1-1/2	3-1/2	Studs
227, 229, 232, 481, 490	1-1/2	1	3-1/2	Studs
230, 234, 364, 484	1-1/2	19/32	3-9/16	Studs
233, 259	2-27/32	11/16	1-15/16	Lugs
268, 485	4-15/16	1-1/2	4-3/4	Studs
267, 315, 486	2-13/32	1-15/32	4-3/4	Studs
330	1-1/2	1	4-3/8	Studs
338	2-1/4	11/16	1-31/32	No lugs or studs
480	2-1/4	11/16	1-15/16	Lugs
483	1-1/2	1	2-3/8	Studs
491	3-11/32	1-9/16	3-17/32	Studs
494	2-3/8	1-13/32	4-7/32	No lugs or studs
495	2-3/8	2-1/16	4-7/32	No lugs or studs

TCI Library www.telephonecollectors.info

TABLE 1.02 **PAPER, MINERAL OIL, STUD MOUNTED**

CAPACITANCES

MULTIPLE UNIT TYPES

Code	Capacitance - mf		Working Voltages		Remarks
	Maximum	Minimum	DC	AC*	
TWO SEPARATE UNITS					
491A	0.924 0.924	0.836 0.836	600	-	Balanced to 0.0088 mf at 1 kc
481A	0.1312 0.86	0.1236 0.64	250	-	
481B	0.0606 0.69	0.0570 0.51	250	-	
TWO UNITS WITH COMMON TERMINAL					
330A	0.86 0.86	0.64 0.64	250	-	
482B	0.575 0.575	0.425 0.425	400	-	
330C	0.86 0.130	0.64 0.100	250	-	
482A	0.575 0.115	0.425 0.085	400	-	
482E	0.077 0.077	0.063 0.063	-	850	Common on can
330B	0.86 0.06	0.64 0.04	250	-	
481C	0.023 0.023	0.017 0.017	600	-	
FOUR SEPARATE UNITS					
315B	0.575 0.574 0.574 0.574	0.425 0.425 0.425 0.425	250	-	
315A	2.30 1.15 0.05 0.115	1.70 0.85 0.03 0.085	250	-	

*At frequencies of 60cps or less

TCI Library www.telephonecollectors.info

DESCRIPTION

Metallized paper capacitors potted in synthetic gel in metal containers.

Principal applications: Coin collectors and transmission circuits where small size, high quality, low voltage dc capacitors are needed.

Tubular types are hermetically sealed.

CAPACITANCES

CODE	CAP - mf MAX.	CAP - mf MIN.	RATED DC VOLTAGE SPARKING SOME	RATED DC VOLTAGE SPARKING NONE	MAX OPR TEMP °F	FIGS
513B	5.0	4.0	200	125	170	1,8
452B	4.6	3.4	200	125	170	2,8
513A	3.5	2.5	350	250	170	1,8
452C	2.5	2.0	200	125	170	2,8
510A	2.4	1.6	200	125	185	5,7
521A	1.20	0.80	200	125	185	5,7
508A	1.20	0.80	200	125	185	5,7
522A	0.60	0.40	350	250	185	5,7
503B	0.480	0.392	200	125	185	3,7
502D	0.344	0.281	200	125	185	3,7
508B	0.30	0.20	350	250	185	5,7
503A	0.30	0.20	350	250	185	3,7
502E	0.240	0.196	200	125	185	3,7
502A	0.325	0.175	200	125	185	3,7
519A	0.120	0.080	350	250	185	4,8
502B	0.120	0.080	350	250	185	3,7
502C	0.090	0.050	-	300	185	3,7

For sparking "None", the voltage ratings are for substantially no sparking (momentary breakdown with self healing). If moderate sparking can be tolerated the "Some" ratings should be used.

Codes 515, 517

Maximum Operating Temperature: +170°F.

Tolerance: ±3%.

Figures 6 and 7.

NOTE: The maximum operating temperature should be 135°F if the aging is not to exceed approximately 1/2%.

CODE	CAP mf	RATED DC VOLTAGE	CODE	CAP mf	RATED DC VOLTAGE
517A	2.26	125	515N	0.0959	200
517B	2.18	125	515AL	0.0902	200
517C	1.51	125	515G	0.0806	200
515U	1.23	125	515AC	0.0779	200
515W	0.975	125	515AD	0.0721	200
515A	0.641	125	515H	0.0666	200
515B	0.533	125	515AJ	0.0609	200
515R	0.462	125	515AG	0.0568	200
515Y	0.361	125	515S	0.0535	200
515C	0.346	125	515AE	0.0485	200
515AH	0.335	125	515J	0.0458	200
515D	0.320	125	515AF	0.0410	200
515E	0.229	125	515K	0.0284	200
515T	0.173	200	515P	0.0239	200
515AA	0.158	200			
515M	0.140	200			
515L	0.131	200			
515AK	0.1162	200			
515AB	0.106	200			
515F	0.1009	200			

NOTE: Capacitors in this group having voltage ratings of 200 are of foil paper construction.

TCI Library www.telephonecollectors.info

TABLE 1.03

METALLIZED PAPER, RECTANGULAR, TUBULAR

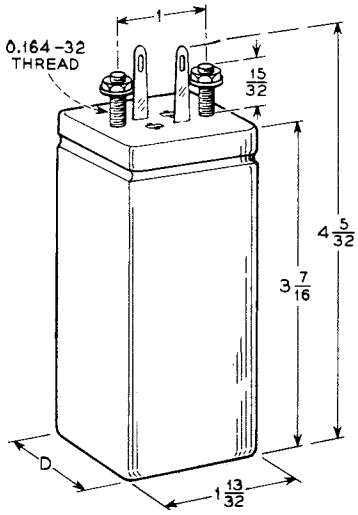

FIG. 1

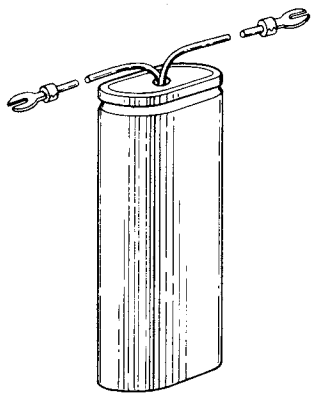

FIG. 2

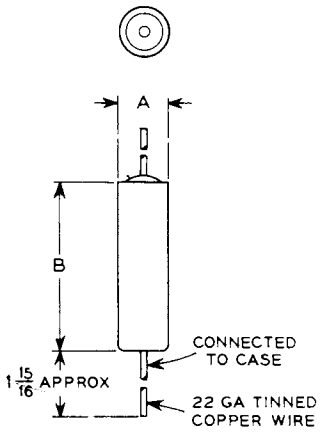

FIG. 3

FIG. 4

SAME AS FIG. 3 EXCEPT WITH GLASS TERMINALS AT BOTH ENDS

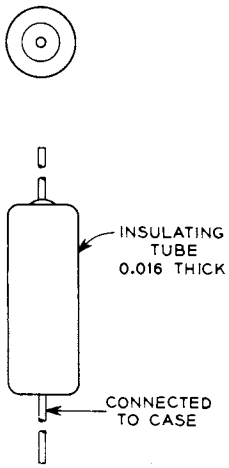

FIG. 5

SAME AS FIG. 3 EXCEPT WITH INSULATING TUBE

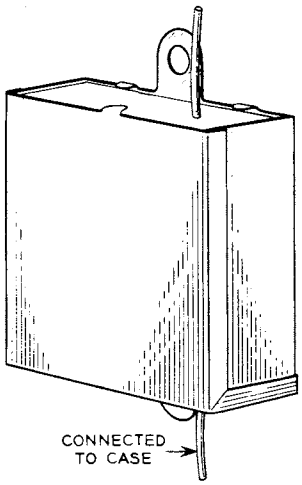

FIG. 6

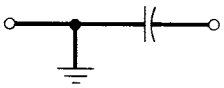

FIG. 7

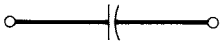

FIG. 8

CODE	DIMENSIONS	
	A	B
502	1/2	1
503	3/4	1
508	9/16	1-15/16
510	3/4	2
519	1/2	1-1/16
521	5/8	1-5/16
522	5/8	1-13/16

CODE	DIMENSIONS - INCHES		
	W	D	H
452	1-25/64	41/64	2-9/32
513	1-13/32	25/32	3-7/16
515	1-9/32	7/16	1-11/32
517	1-3/8	25/32	1-11/32

TCI Library www.telephonecollectors.info

DESCRIPTION

Paper capacitors potted in wax in aluminum cans

Principal Applications: Central Office circuits

Operating Temperature Range: 0° to +120°F

One mounting stud is connected electrically to can.

Use Q-types only when circuit conditions justify the special close limits and extra price.

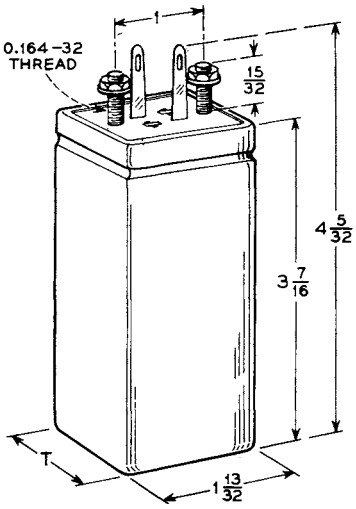

Codes	T
437	1-13/32
439, 440 444	25/32
441, 442	15/32

CAPACITANCES

Code	Capacitance - mf		Working Voltage		Remarks
	Maximum	Minimum	DC	AC*	
437QA	4.36	4.28	200	180	
437A	5.00	4.00	200	180	
444A	3.75	3.00	130	100	
439QF	2.28	2.16	200	180	
439QC	2.22	2.16	200	180	
439QA	2.18	2.14	200	180	
439QB	2.16	2.10	200	180	
439QD	2.24	2.08	200	180	
439QE	2.16	2.04	200	180	
439A	2.50	2.00	200	180	
441S	1.60	1.30	200	180	
440F	1.57	1.25	300	300	
441QF	1.14	1.08	200	180	
441QC	1.11	1.08	200	180	
440QA	1.09	1.07	300	300	
441QA	1.09	1.07	200	180	
441QB	1.08	1.05	200	180	
440QB	1.12	1.04	300	300	
441QD	1.12	1.04	200	180	
441QE	1.08	1.02	200	180	
440A	1.25	1.00	300	300	
441A	1.25	1.00	200	180	
441QM	0.57	0.54	200	180	
441QJ	0.555	0.540	200	180	
441QG	0.545	0.535	200	180	
442QA	0.545	0.535	300	300	
441QH	0.540	0.525	200	180	
441QK	0.560	0.520	200	180	
441QL	0.54	0.51	200	180	
441B	0.625	0.500	200	180	
442A	0.62	0.50	300	300	
440C	0.62	0.50	300	300	Note 1
441QS	0.29	0.27	200	180	
441QN	0.275	0.265	200	180	
441QP	0.28	0.26	200	180	
442B	0.32	0.25	300	300	
441D	0.32	0.25	200	180	
441QR	0.27	0.25	200	180	
441J	0.160	0.125	200	180	
441QW	0.12	0.11	200	180	
441QT	0.115	0.105	200	180	
441K	0.135	0.100	200	180	
442C	0.125	0.100	300	300	
441QU	0.11	0.10	200	180	
441L	0.085	0.065	200	180	
442D	0.06	0.05	300	300	
441M	0.06	0.04	200	180	
441U	0.04	0.03	200	180	
441N	0.03	0.02	200	180	
441P	0.006	0.004	200	180	

NOTES

* At frequencies of 60 cps or less

1. Intended for use as plate blocking capacitor in repeater circuits where unusually high insulation resistance is required.

TCI Library www.telephonecollectors.info

TCI Library www.telephonecollectors.info

DESCRIPTION

Paper capacitors potted in wax in aluminum cans.

Principal Applications: Central Office Circuits.

Operating Temperature Range: 0° to +120°F.

Rated working voltages, except as otherwise noted, are 200 dc or 180 ac at frequencies of 60 cps or less.

One mounting stud is connected electrically to can.

Use Q-types only when circuit conditions justify the special close limits and extra price.

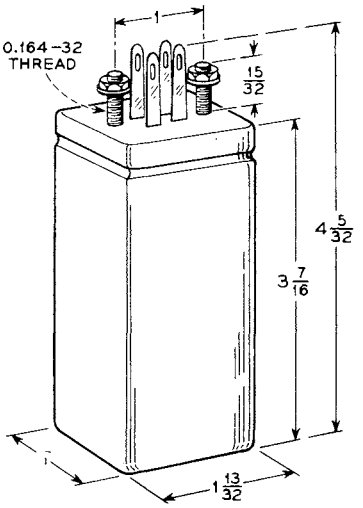

Codes	T
437	1-13/32
439	25/32
441, 442	15/32

CAPACITANCES

DOUBLE UNIT TYPE. Two separate capacitors insulated but not shielded from each other. Should not be used where capacitance between units will be detrimental.

Code	Capacitance - mf				Remarks
	A-B		C-D		
	Max.	Min.	Max.	Min.	
437QB	4.36	4.28	0.03	0.02	
437D	5.00	4.00	0.06	0.05	
437B	5.00	4.00	0.03	0.02	
439QG	2.28	2.16	0.03	0.02	
437C	2.50	2.00	2.50	2.00	
437E	2.50	2.00	2.50	2.00	Matched to 0.11 mf
439D	2.50	2.00	0.06	0.05	
439B	2.50	2.00	0.03	0.02	
439E	1.50	1.20	1.50	1.20	
439QH	1.08	1.05	1.25	1.00	
439C	1.25	1.00	1.25	1.00	
439H	1.25	1.00	1.25	1.00	Matched to 0.055 mf
441C	0.625	0.500	0.625	0.500	
441F	0.32	0.25	0.625	0.500	
441E	0.32	0.25	0.32	0.25	
441Y	0.135	0.100	0.16	0.14	
441G	0.085	0.065	0.160	0.125	
441T	0.135	0.100	0.135	0.100	
441R	0.013	0.010	0.013	0.010	
442E	0.03	0.02	0.03	0.02	Note 1
441H	0.03	0.02	0.03	0.02	
442F	0.0065	0.0050	0.0065	0.0050	Note 1

TRIPLE UNIT TYPE. Three units having common terminal "C".

Code	Capacitance - mf	
	Max.	Min.
441W	0.135 0.135 0.135	0.100 0.100 0.100

NOTES

1. Rated working voltages are 300 dc or ac at frequencies of 60 cps or less.

TCI Library www.telephonecollectors.info

TCI Library www.telephonecollectors.info

DESCRIPTION

Paper capacitors potted in wax. 195-type has lead can, others have aluminum cans.

Principal Application: Telephone sets, step-by-step switches.

Operating Temperature Range: 0° to +120°F.

CAPACITANCES

SINGLE UNIT TYPE

Code	Capacitance mf		Working Voltages		Remarks
	Max.	Min.	DC	AC*	
445QA	4.36	4.28	200	180	Two units, strapped externally.
195C	2.50	2.00	130	100	Flexible leads.
447A	2.50	2.00	200	180	
449A	1.25	1.00	200	180	
449E	1.25	1.00	200	180	Flexible leads.
449G	1.25	1.00	200	180	Flexible leads.
449D	0.80	0.65	200	180	
449F	0.80	0.65	200	180	Flexible leads.
449B	0.62	0.500	200	180	
449H	0.62	0.500	200	180	Flexible leads.
449C	0.13	0.10	200	180	
449J	0.05	0.04	300	300	

DOUBLE UNIT TYPE. Two separate capacitors insulated but not shielded from each other. Should not be used where capacitance between units will be detrimental.

Code	Capacitance mf		Working Voltages		Remarks
	Max.	Min.	DC	AC*	
445A	2.50	2.00	200	180	
	2.50	2.00	200	180	
447H	2.50	2.00	130	100	
	1.25	1.00	200	180	
447L	2.50	2.00	130	100	Flexible leads.
	1.25	1.00	200	180	
195A	2.50	2.00	130	100	Flexible leads.
	0.63	0.50	200	180	
195B	2.50	2.00	130	100	Flexible leads. Can has lead
	0.63	0.50	200	180	attached and insulating coating.
447J	2.50	2.00	130	100	
	0.625	0.50	200	180	
447K	2.50	2.00	130	100	Flexible leads.
	0.625	0.50	200	180	
447G	0.048	0.032	300	300	Smaller unit stamped 0.04mf.
	2.50	2.00	200	180	
447E	1.25	1.00	200	180	Flexible leads.
	1.25	1.00	200	180	
447B	1.25	1.00	200	180	
	1.25	1.00	200	180	
447F	1.25	1.00	200	180	Flexible leads. Common terminal.
	0.62	0.50	200	180	
447D	1.25	1.00	200	180	Common terminal.
	0.62	0.50	200	180	

TRIPLE UNIT TYPE. Units insulated but not shielded from each other.

Code	Capacitance mf		Working Voltages		Remarks
	Max.	Min.	DC	AC*	
445B	2.50	2.00	200	180	
	2.50	2.00	200	180	
	0.048	0.032	300	300	Stamped 0.04.
387A	2.50	2.00	200	180	
	0.63	0.50	200	180	Flexible leads.
	0.63	0.50	200	180	

* At frequencies of 60 cps or less

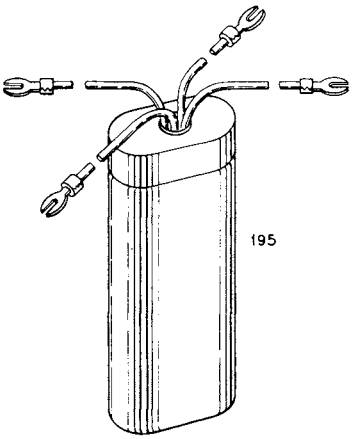

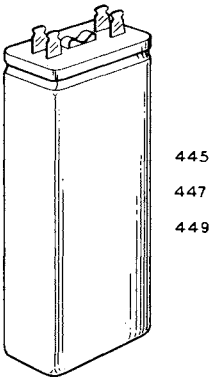

Code	Dimensions - Inches		
	Width	Depth	Height
195	1-3/8	11/16	3-9/16
387	1-11/32	1-7/32	3-7/16
445	1-13/32	1-13/32	3-7/16
447	1-13/32	25/32	3-7/16
449	1-13/32	15/32	3-7/16

TCI Library www.telephonecollectors.info

TCI Library www.telephonecollectors.info

DESCRIPTION

Two capacitor units, each potted in a separate metal can. Except as noted, the two cans are fastened together by soldering, by a strap or a common metal cover.

Paper capacitors, wax impregnated, except the 491A which is oil impregnated.

Principal Application: Circuit in which balanced components are required, such as composite sets, line filters, etc.

At least one mounting stud is connected electrically to can.

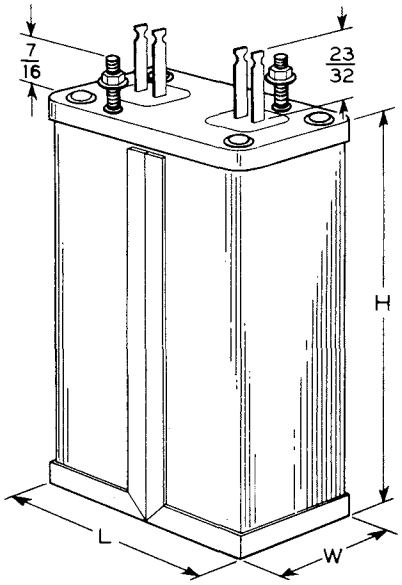

CAPACITANCES

Code	Capacitance of Each Unit, mf Max.	Min.	Maximum Unbalance mf	Temperature Range °F		Working Voltages DC	AC*	Dimensions - Inches L	W	H	Remarks
157A	4.36	4.28	0.022	0	+120	200	180	4-15/16	1-1/2	3-1/2	
158A	2.18	2.14	0.011	0	+120	300	300	4-29/32	1-15/32	3-29/64	
155A	2.18	2.14	0.011	0	+120	200	180	2-13/32	1-15/32	3-29/64	
489A	2.50 0.03	2.00 0.02	0.11	0	+120	200	180	1-13/32	25/32 each	3-7/16	Paired 439B's. Not fastened together.
491A	0.924	0.836	0.0088	-60	+185	600	400	3-11/32	1-9/16	3-17/32	Oil impregnated paper, hermetically sealed.
154A	0.0131	0.0119	0.000062	0	+120	600	400	1-17/32	1-15/32	3-13/32	

* At frequencies of 60cps or less.

TCI Library www.telephonecollectors.info

TCI Library www.telephonecollectors.info

DESCRIPTION

Tubular paper capacitors, hermetically sealed in metal cans or in glass.

Principal Applications: Transmission equalizers, filters and networks. Power supply filters.

Operating Temperature Range: -60° to +185°F.

Rated working voltages are specified in table below.

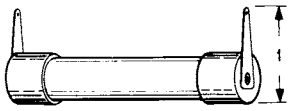

310
314

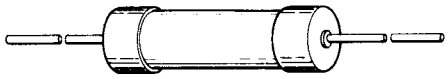

477
512

478

502
503
508
510

Code	Dimensions - Inches		Terminals
	Diameter	Length	
310, 314	17/32	2-1/8	Cylindrical, solder lugs
477	17/32	1-19/32	Cylindrical, wires
478	9/16	1-19/32	Tinned axial wires
502	1/2	1-1/8	Tinned axial wires
503	13/16	1-1/8	Tinned axial wires
508	9/16	1-15/16	Tinned axial wires
510	3/4	1-15/16	Tinned axial wires
512	17/32	2-5/32	Tinned axial wires

CAPACITANCES

Code	Capacitance - mf		Voltages		Type	Enclosure
	Maximum	Minimum	DC	AC*		
510A	2.40	1.60	125	-	Metallized paper	Metal, insulating cover
508A	1.20	0.80	125	-	Metallized paper	Metal, insulating cover
508B	0.30	0.20	250	-	Metallized paper	Metal, insulating cover
503A	0.30	0.20	250	-	Metallized paper	Metal
502A	0.325	0.175	125	-	Metallized paper	Metal
512A	0.115	0.085	250	-	Oil, paper	Glass
314B	0.115	0.085	250	-	Oil, paper	Glass
502B	0.105	0.055	250	-	Metallized paper	Metal
502C	0.090	0.050	300	-	Metallized paper	Metal
478B	0.060	0.050	400	-	Oil, paper	Glass, insulating cover
477A	0.060	0.050	400	-	Oil, paper	Glass
478A	0.0462	0.0418	400	-	Oil, paper	Glass, insulating cover
478C	0.0315	0.0285	600	-	Oil, paper	Glass, insulating cover
314A	0.0207	0.0169	1000	-	Oil, paper	Glass
310B	0.024	0.016	1200	660	Aroclor, paper	Glass
310A	0.012	0.008	1200	660	Aroclor, paper	Glass

*At frequencies of 60 cps or less.

TCI Library www.telephonecollectors.info

TCI Library www.telephonecollectors.info

DESCRIPTION

Paper capacitors in metal cans.

Principal Applications: By-pass and radio interference suppression.

Operating Temperature Range: 0° to +120°F unless otherwise specified.

Working voltages are specified in the table below.

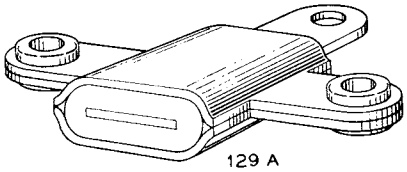

129 A

CAPACITANCES

Code	Capacitance - mf		Voltages		Dimensions - Inches			Flex Leads	Lead Can	Remarks
	Maximum	Minimum	DC	AC*	Width	Depth	Height			
129A	-	0.006	100	-	1-11/64	3/16	29/32	No	No	
129E	-	0.006	100	-	3/4	21/32	1-11/32	One	No	Insulating wrapper
129F	-	0.006	100	-	15/16	1/4	1	No	No	

*At frequencies of 60 cps or less.

TCI Library www.telephonecollectors.info

TCI Library www.telephonecollectors.info

DATA SHEET **PAPER, TEN SECTION, STUD MOUNTED, BUILDING OUT** **TABLE 1.10**

DESCRIPTION

Paper capacitors in metal can having metal cover. Common terminal "C".

Principal Application: Tuned circuits and building-out.

Operating Temperature Range: 0° to +120°F.

Rated working voltages are 300dc or ac at frequencies of 60 cps or less.

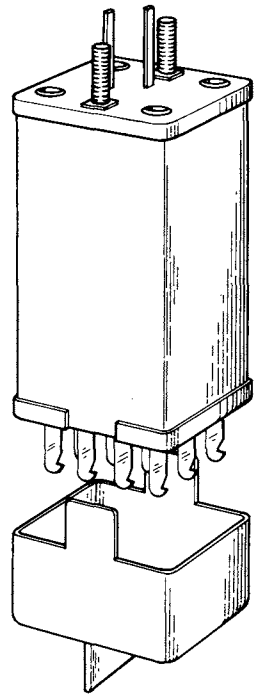

1-5/8 X 1-15/32 X 3-1/2 not including terminals, mounting studs or cover tab.

CAPACITANCES

Code	Capacitance Obtainable	Term No	Capacitance of Units - mf Max	Min	Marking	Term No	Capacitance of units - mf Max	Min	Marking
187A	0 to 0.346 to within 0.00133mf	1	0.00266	0.00133	0.002	6	0.0235	0.0165	0.02
		2	0.00266	0.00133	0.002	7	0.0400	0.0280	0.034
		3	0.0048	0.0032	0.004	8	0.0682	0.0478	0.058
		4	0.0084	0.0056	0.007	9	0.115	0.085	0.100
		5	0.0141	0.0094	0.012	10	0.200	0.148	0.174
187B	0 to 0.069 to within 0.00066mf	1	0.00133	0.00066	0.001	6	0.0048	0.0032	0.004
		2	0.00133	0.00066	0.001	7	0.0096	0.0064	0.008
		3	0.00266	0.00133	0.002	8	0.0096	0.0064	0.008
		4	0.00266	0.00133	0.002	9	0.0240	0.0168	0.020
		5	0.0048	0.0032	0.004	10	0.0412	0.0288	0.035
187E	Same as 187B but without dust cover								
187C	0 to 0.00584 to within 0.000084mf	1	0.000166	0.000084	0.00012	6	0.00066	0.00033	0.0005
		2	0.000166	0.000084	0.00012	7	0.00133	0.00066	0.001
		3	0.00033	0.000166	0.00025	8	0.00133	0.00066	0.001
		4	0.00033	0.000166	0.00025	9	0.00266	0.00133	0.002
		5	0.00066	0.00033	0.00050	10	0.004	0.002	0.003

TCI Library www.telephonecollectors.info

TCI Library www.telephonecollectors.info

DATA SHEET **PAPER, PRECISION, F, 1 SECTION, MODERATE Q** **TABLE 1.11**

DESCRIPTION

Precision paper capacitors potted in asphalt in aluminum cans. No mounting studs or lugs.

Principal Applications: Transmission equalizers, filters and networks.

Operating Temperature Range: 0° to +120°F.

Frequencies at which the capacitances are measured are given in the table.

Rated working voltages are 200 dc or 180 ac at frequencies of 60 cps or less. Capacitors for which test voltages are specified are capable of withstanding occasional impulses of short duration having peak values as high as those of the test voltages.

CAPACITANCES

Code	Capacitance - mf Maximum	Capacitance - mf Minimum	Freq kc	Remarks
FF9	4.363	4.277	1.0	
FF12	4.725	4.275	1.0	
FF7	3.623	3.586	1.0	
FF6	3.885	3.515	1.0	
FF11	3.362	3.295	1.0	
FF10	2.501	2.452	1.0	
FE51	2.18	2.14	1.0	
FF15	1.954	1.915	1.0	
FE66	1.782	1.747	1.0	
FF14	1.762	1.727	1.0	
FF13	1.706	1.672	1.0	
FE111	1.620	1.587	1.0	
FE110	1.347	1.320	1.0	
FE73	1.199	1.190	1.0	
FJ10	1.09	1.07	1.0	
FE82	0.9582	0.9486	2.5	
FJ41	0.7639	0.7563	1.0	
FF8	0.7594	0.7444	1.0	1500 ac test
FJ14	0.765	0.735	1.0	
FJ101	0.7216	0.7073	2.5	
FJ53	0.6953	0.6815	2.5	
FJ52	0.6779	0.6644	1.0	
FJ169	0.6551	0.6421	1.0	
FJ152	0.6616	0.6356	1.0	
FJ170	0.6065	0.5945	1.0	
FJ134	0.6018	0.5782	1.0	
FJ17	0.5454	0.5346	1.0	
FJ73	0.5508	0.5292	1.0	
FJ44	0.5321	0.5267	10.0	
FJ158	0.510	0.490	1.0	
FJ135	0.4637	0.4591	10.0	
FJ133	0.4743	0.4557	1.0	
FJ151	0.4475	0.4387	1.0	
FJ21	0.3877	0.3839	5.0	
FJ132	0.3586	0.3514	1.0	
FJ131	0.3333	0.3267	1.0	
FJ150	0.3306	0.3240	1.0	
FJ83	0.2919	0.2861	1.0	
FJ71	0.269	0.259	1.0	
FJ130	0.2576	0.2524	1.0	
FJ129	0.2505	0.2455	1.0	
FJ54	0.2548	0.2448	1.0	
FJ97	0.2485	0.2435	1.0	
FJ88	0.2348	0.2302	1.0	
FJ38	0.2307	0.2284	1.0	
FJ167	0.2220	0.2175	2.5	
FJ70	0.216	0.208	1.0	
FJ82	0.2020	0.1980	1.0	
FJ23	0.2014	0.1974	2.5	
FJ46	0.1929	0.1891	1.0	
FJ45	0.1875	0.1856	20.0	
FJ95	0.1848	0.1812	1.0	
FJ128	0.1798	0.1762	1.0	
FJ149	0.1790	1.1754	1.0	
FJ156	0.1736	0.1718	2.5	
FJ24	0.1744	0.1710	2.5	
FJ7	0.1714	0.1646	1.0	
FJ104	0.1682	0.1640	1.0	
FJ43	0.1627	0.1611	5.0	
FJ148	0.1641	0.1609	1.0	
FJ147	0.1612	0.1580	1.0	
FJ42	0.1585	0.1569	5.0	
FJ146	0.1575	0.1543	1.0	
FJ92	0.1531	0.1501	1.0	
FJ145	0.1518	0.1488	2.5	

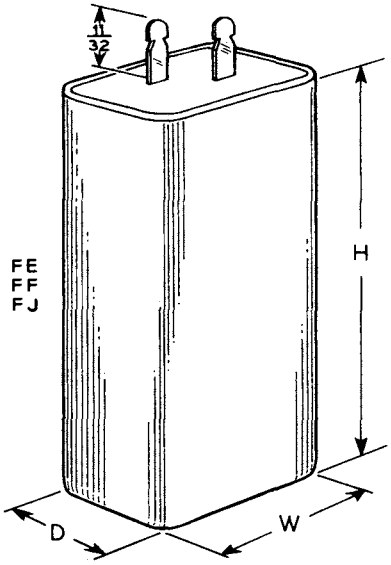

Code	Dimensions - Inches W	D	H
FE	1-13/32	25/32	3-13/32
FF	1-13/32	1-13/32	3-13/32
FJ	1-13/32	15/32	3-13/32

TCI Library www.telephonecollectors.info

TABLE 1.11 **PAPER, PRECISION, F, 1 SECTION, MODERATE Q**

Code	Capacitance - mf Maximum	Capacitance - mf Minimum	Freq kc	Remarks
FJ144	0.1511	0.1481	2.5	
FJ127	0.1472	0.1442	1.0	
FJ22	0.1442	0.1414	2.5	
FJ79	0.1434	0.1406	1.0	
FJ47	0.1424	0.1396	1.0	
FJ143	0.1399	0.1371	2.5	
FJ102	0.1377	0.1350	1.0	
FJ142	0.1356	0.1330	2.5	
FJ81	0.1293	0.1267	1.0	
FJ111	0.1237	0.1212	1.0	
FJ166	0.1185	0.1161	2.5	
FJ176	0.1139	0.1127	3.0	
FJ90	0.1108	0.1086	1.0	
FJ48	0.1091	0.1069	1.0	
FJ155	0.1080	0.1069	2.5	
FJ159	0.1076	0.1056	1.0	
FJ87	0.1071	0.1049	1.0	
FJ78	0.1061	0.1039	1.0	
FJ62	0.1071	0.1029	5.0	
FJ77	0.1035	0.1015	1.0	
FJ116	0.1020	0.0980	1.0	
FJ59	0.09799	0.09701	10.0	
FJ103	0.0984	0.0965	1.0	
FJ89	0.09580	0.09390	1.0	
FJ175	0.09471	0.09377	3.0	
FJ165	0.09169	0.08987	2.5	
FJ141	0.08981	0.08803	2.5	
FJ110	0.0880	0.0862	1.0	
FJ49	0.08652	0.08488	1.0	
FJ112	0.0859	0.0842	1.0	
FJ69	0.0866	0.0832	1.0	
FJ126	0.08343	0.08177	1.0	
FJ80	0.08242	0.08078	1.0	
FJ153	0.07705	0.07553	2.5	
FJ164	0.07609	0.07458	2.5	
FJ94	0.07541	0.07391	1.0	
FJ163	0.07381	0.07235	2.5	
FJ174	0.07053	0.06983	3.0	
FJ50	0.07030	0.06890	1.0	
FJ125	0.06969	0.06831	1.0	
FJ162	0.06865	0.06729	2.5	
FJ168	0.06713	0.6580	2.5	
FJ105	0.0651	0.0638	1.0	
FJ93	0.06232	0.06108	1.0	
FJ91	0.05979	0.05861	1.0	
FJ173	0.05864	0.05806	3.0	
FJ51	0.05818	0.05702	1.0	
FJ76	0.05585	0.05475	1.0	
FJ61	0.0561	0.0539	5.0	
FJ140	0.05447	0.05339	2.5	
FJ177	0.05380	0.05326	5.0	
FJ20	0.05306	0.05200	2.5	
FJ55	0.0539	0.0517	1.0	
FJ124	0.05252	0.05148	1.0	
FJ75	0.05171	0.05069	1.0	
FJ154	0.05078	0.05027	2.5	
FJ115	0.05050	0.04950	1.0	
FJ37	0.04735	0.04685	1.0	
FJ68	0.0475	0.0457	1.0	
FJ36	0.04580	0.04534	1.0	
FJ74	0.04343	0.04257	1.0	
FJ139	0.04324	0.04238	2.5	
FJ123	0.04262	0.04178	1.0	
FJ172	0.04100	0.04060	3.0	
FJ161	0.04030	0.03950	2.5	

Code	Capacitance - mf Maximum	Capacitance - mf Minimum	Freq kc	Remarks
FJ13	0.03679	0.03607	1.0	
FJ67	0.0364	0.0350	1.0	
FJ122	0.03495	0.03425	1.0	
FJ66	0.0339	0.0325	1.0	
FJ19	0.03291	0.03225	2.5	
FJ84	0.03182	0.03118	1.0	
FJ16	0.03131	0.03069	1.0	
FJ114	0.03060	0.0294	1.0	
FJ138	0.02984	0.02924	2.5	
FJ35	0.02767	0.02739	1.0	
FJ57	0.0284	0.0272	1.0	
FJ113	0.02754	0.02646	1.0	
FJ121	0.02687	0.02633	1.0	
FJ86	0.02636	0.02584	1.0	
FJ171	0.02549	0.02523	3.0	
FJ3	0.02368	0.02322	2.5	
FJ65	0.0222	0.0214	1.0	
FJ120	0.02081	0.02039	1.0	
FJ64	0.0211	0.0203	1.0	
FJ39	0.02056	0.02014	1.0	
FJ137	0.01990	0.01950	2.5	
FJ40	0.01962	0.01942	10.0	
FJ34	0.01850	0.01832	1.0	
FJ160	0.0179	0.0175	1.0	
FJ9	0.01769	0.01733	1.0	
FJ119	0.01747	0.01713	1.0	
FJ12	0.01592	0.01560	1.0	
FJ6	0.01530	0.01500	1.0	
FJ118	0.01525	0.01495	1.0	
FJ33	0.01430	0.01416	2.5	
FJ32	0.01415	0.01401	2.5	
FJ58	0.01448	0.01392	10.0	
FJ31	0.01391	0.01377	2.5	
FJ30	0.01354	0.01340	1.0	
FJ29	0.01324	0.01310	2.5	
FJ85	0.01318	0.01292	1.0	
FJ28	0.01289	0.01277	1.0	
FJ98	0.01227	0.01203	1.0	
FJ27	0.01161	0.01149	1.0	
FJ96	0.01151	0.01129	1.0	
FJ11	0.01118	0.01096	1.0	
FJ63	0.0112	0.0108	1.0	
FJ99	0.01061	0.01039	1.0	
FJ60	0.01005	0.00995	5.0	
FJ2	0.01012	0.00992	2.5	
FJ26	0.009943	0.009845	2.5	
FJ8	0.009116	0.008936	1.0	
FJ117	0.008706	0.008534	1.0	
FJ15	0.007979	0.007821	1.0	
FJ25	0.007740	0.007662	2.5	
FJ5	0.007647	0.007495	1.0	
FJ100	0.005454	0.005346	1.0	
FJ136	0.005276	0.005070	2.5	
FJ72	0.0051	0.0049	1.0	
FJ4	0.004447	0.004359	1.0	
FJ18	0.00408	0.00392	1.0	
FJ157	0.003533	0.003463	1.0	
FJ56	0.00194	0.00186	1.0	

TCI Library www.telephonecollectors.info

DESCRIPTION

Precision paper capacitors potted in asphalt in metal cans. No mounting studs or lugs.

Principal Applications: Transmission equalizers, filters and networks.

Operating Temperature Range: 0° to +120° F

Rated working voltages are 200 dc or 180 ac at frequencies of 60 cps or less.

CAPACITANCES

TWO SEPARATE UNITS

Code	Capacitance - mf 1-2 Maximum	1-2 Minimum	3-4 Maximum	3-4 Minimum	Freq kc
FF5	0.997	0.958	1.227	1.179	1.0
FE109	0.7401	0.7254	0.7401	0.7254	0.9
FF4	0.732	0.704	1.914	1.839	1.0
FF3	0.732	0.704	1.690	1.624	1.0
FE108	0.6328	0.6202	0.6328	0.6202	1.0
FE48	0.6083	0.6022	0.6083	0.6022	1.0
FE107	0.5714	0.5600	0.5714	0.5600	2.5
FE47	0.5387	0.5333	0.5387	0.5333	1.0
FF2	0.5394	0.5182	1.164	1.118	1.0
FE106	0.5225	0.5121	0.5225	0.5121	2.5
FE30	0.4891	0.4842	0.4891	0.4842	2.5
FE14	0.4859	0.4811	0.4859	0.4811	1.0
FE105	0.4767	0.4672	0.4767	0.4672	2.5
FE46	0.4669	0.4622	0.4669	0.4622	2.5
FE104	0.4453	0.4364	0.4453	0.4364	2.5
FE103	0.4204	0.4120	0.4204	0.4120	2.5
FF1	0.4205	0.4040	0.8770	0.8426	1.0
FE45	0.3818	0.3779	0.3818	0.3779	5.0
FE102	0.3755	0.3680	0.3755	0.3680	2.5
FE13	0.3664	0.3628	0.3664	0.3628	5.0
FE101	0.3635	0.3563	0.3635	0.3563	1.0
FE57	0.3523	0.3453	0.3805	0.3730	1.0
FE100	0.3444	0.3376	0.3444	0.3376	2.5
FE85	0.4050	0.3970	0.3169	0.3106	1.0
FE72	0.3119	0.2997	0.6555	0.6297	1.0
FE119	0.3057	0.2996	0.3057	0.2996	1.0
FE99	0.2857	0.2800	0.2857	0.2800	2.5
FE98	0.2744	0.2689	0.2744	0.2689	2.5
FE97	0.2602	0.2550	0.2602	0.2550	1.0
FE117	0.2454	0.2406	0.2454	0.2406	1.0
FE84	0.2450	0.2402	0.2450	0.2402	5.0
FE116	0.2348	0.2302	0.2348	0.2302	1.0
FE96	0.2176	0.2132	0.2176	0.2132	2.5
FE95	0.2105	0.2063	0.2105	0.2063	2.5
FE114	0.2081	0.2040	0.2081	0.2040	1.0
FE12	0.2034	0.2014	0.2034	0.2014	2.5
FE115	0.1999	0.1960	0.1999	0.1960	1.0
FE11	0.1910	0.1890	0.1910	0.1890	1.0
FE86	0.4799	0.4704	0.1853	0.1816	1.0
FE94	0.1723	0.1688	0.1723	0.1688	1.0
FE10	0.1562	0.1546	0.1562	0.1546	5.0
FE87	0.3949	0.3871	0.1509	0.1479	1.0
FE83	0.1505	0.1475	0.1505	0.1475	5.0
FE9	0.1470	0.1456	0.1470	0.1456	2.5
FE71	0.1463	0.1435	0.1463	0.1435	1.0
FE8	0.1436	0.1422	0.1436	0.1422	5.0
FE93	0.1348	0.1321	0.1348	0.1321	1.0
FE118	0.1237	0.1212	0.1237	0.1212	1.0
FE7	0.1112	0.1100	0.1112	0.1100	2.5
FE92	0.09422	0.09235	0.09422	0.09235	2.5
FE91	0.09032	0.08853	0.09032	0.08853	1.0
FE74	0.08708	0.08536	0.1610	0.1578	1.0
FE44	0.08205	0.08123	0.08205	0.08123	1.0
FE70	0.08151	0.07989	0.08151	0.7989	1.0
FE90	0.07529	0.07380	0.07529	0.07380	2.5
FE81	0.0719	0.0711	0.1656	0.1639	20.0
FE6	0.06991	0.06921	0.06991	0.06921	2.5
FE113	0.06502	0.06373	0.06502	0.06373	1.0
FE43	0.06066	0.06006	0.06066	0.06006	1.0
FE50	0.05969	0.05910	0.05969	0.05910	10.0

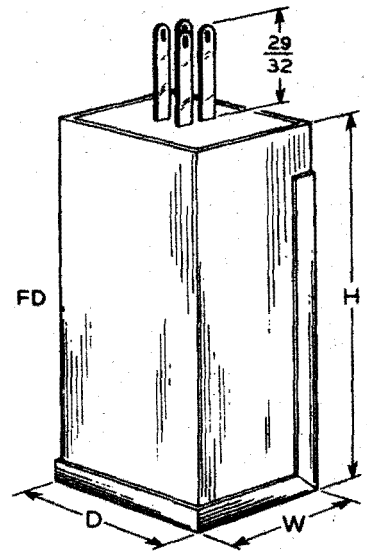

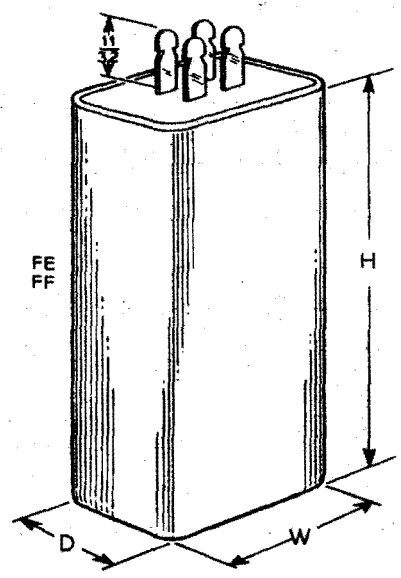

Code	Dimensions - Inches W	D	H	Material of can
FD	1-13/32	2-13/32	3-13/32	Tinplate
FE	1-13/32	25/32	3-13/32	Aluminum
FF	1-13/32	1-13/32	3-13/32	Aluminum

TCI Library www.telephonecollectors.info

TABLE 1.12 **PAPER, PRECISION, F, 2-3 SECTIONS, MODERATE Q**

TWO SEPARATE UNITS

Code	Capacitance - mf 1-2 Maximum	1-2 Minimum	3-4 Maximum	3-4 Minimum	Freq kc
FE49	0.05782	0.05724	0.05782	0.05724	1.0
FE121	0.05692	0.05636	0.05692	0.05636	3.0
FE69	0.05144	0.05042	0.05144	0.05042	1.0
FE42	0.05016	0.04966	0.05016	0.04966	2.5
FE89	0.04944	0.04845	0.04944	0.04845	2.5
FE68	0.04597	0.04505	0.04597	0.04505	1.0
FE5	0.04537	0.04491	0.04537	0.04491	2.5
FE88	0.04382	0.04295	0.04382	0.04295	2.5
FE67	0.03919	0.03841	0.03919	0.03841	1.0
FE41	0.03800	0.03762	0.03800	0.03762	2.5
FE120	0.03537	0.03501	0.03537	0.03501	3.0
FE4	0.03254	0.03222	0.03254	0.03222	5.0
FE112	0.03806	0.03024	0.03086	0.03024	1.0
FE40	0.02889	0.02860	0.02889	0.02860	2.5
FE39	0.02810	0.02782	0.02810	0.02782	2.5
FE38	0.02376	0.02352	0.02376	0.02352	2.5
FE3	0.02310	0.02288	0.02310	0.02288	5.0
FE37	0.01994	0.01974	0.01994	0.01974	2.5
FE36	0.01688	0.01671	0.01688	0.01671	2.5
FE2	0.01432	0.01418	0.01432	0.01418	5.0
FE35	0.01427	0.01412	0.01427	0.01412	5.0
FE34	0.01210	0.01198	0.01210	0.01198	5.0
FE33	0.01031	0.01021	0.01031	0.01021	5.0
FE32	0.008839	0.008751	0.008839	0.008751	5.0
FE31	0.007635	0.007559	0.007635	0.007559	5.0
FE78	0.001227	0.001179	0.03722	0.03576	1.0
FE79	0.001176	0.001130	1.559	1.528	1.0

TWO UNITS IN SERIES

Code	Capacitance - mf 1-2 Maximum	1-2 Minimum	2-3 Maximum	2-3 Minimum	Freq kc
FD2	1.984	1.906	2.505	2.407	1.0
FD1	1.984	1.906	2.393	2.299	1.0

THREE UNITS WITH COMMON TERMINAL

Code	Capacitance - mf 1-4 Maximum	1-4 Minimum	2-4 Maximum	2-4 Minimum	3-4 Maximum	3-4 Minimum	Freq kc
FE80	0.4568	0.4477	0.05319	0.05213	0.4568	0.4477	1.0
FE18	0.05171	0.05069	0.05585	0.05475	0.1434	0.1406	1.0
FE17	0.04789	0.04695	0.05174	0.05072	0.1328	0.1302	2.5
FE53	0.0441	0.0399	0.0693	0.0627	0.139	0.125	1.0
FD4	0.03443	0.03375	2.177	2.133	2.754	2.700	1.0
FE52	0.0347	0.314	0.0882	0.0798	0.139	0.125	1.0
FD3	0.02734	0.02680	1.195	1.171	1.600	1.568	1.0

THREE UNITS IN SERIES

Code	Capacitance - mf 1-2 Maximum	1-2 Minimum	2-3 Maximum	2-3 Minimum	3-4 Maximum	3-4 Minimum	Freq kc
FE64	0.09538	0.09349	0.7898	0.7741	0.2531	0.2481	0.5
FE124	0.1394	0.1380	0.09169	0.09077	0.1394	0.1380	5.0
FE20	0.1915	0.1879	0.0911	0.0893	0.1915	0.1879	2.5
FE21	0.1657	0.1625	0.0789	0.0773	0.1657	0.1625	2.5
FE15	0.1369	0.1342	0.0651	0.0638	0.1369	0.1342	2.5
FE58	0.04858	0.04762	0.2121	0.2079	0.04858	0.04762	1.0
FE19	0.1061	0.1039	0.1035	0.1015	0.04343	0.04257	1.0
FE16	0.09821	0.09627	0.09589	0.09399	0.04020	0.03940	2.5
FE59	0.02939	0.02881	0.1545	0.1515	0.02939	0.02881	1.0
FE60	0.01919	0.01881	0.1172	0.1148	0.01919	0.01881	1.0
FE122	0.09390	0.09296	0.01743	0.01725	0.09390	0.09296	5.0
FE61	0.01313	0.01287	0.09231	0.09049	0.01313	0.01287	1.0
FE62	0.009423	0.009237	0.07444	0.07296	0.009423	0.009237	1.0
FE1	0.02207	0.02164	0.00927	0.00909	0.0538	0.0527	1.0
FE77	0.007736	0.007582	0.5104	0.5002	0.5032	0.4932	1.0
FE123	0.1267	0.1255	0.006952	0.006882	0.1267	0.1255	5.0
FE63	0.006979	0.006841	0.06131	0.06009	0.006979	0.006841	1.0
FE76	0.2521	0.2471	0.006905	0.006769	0.06247	0.06123	1.0
FE75	0.04465	0.04377	0.004334	0.004248	0.1306	0.1280	1.0
FE65	0.03483	0.0314	0.003068	0.002947	0.006025	0.005905	0.5

TCI Library www.telephonecollectors.info

DESCRIPTION

Precision paper capacitors potted in wax in aluminum cans.

Principal Application: Non-precise tuned circuits.

Operating Temperature Range: 0° to +120°F.

Working voltages, except as otherwise noted, are 200 dc or 180 ac at frequencies of 60 cps or less.

One mounting stud is connected electrically to can.

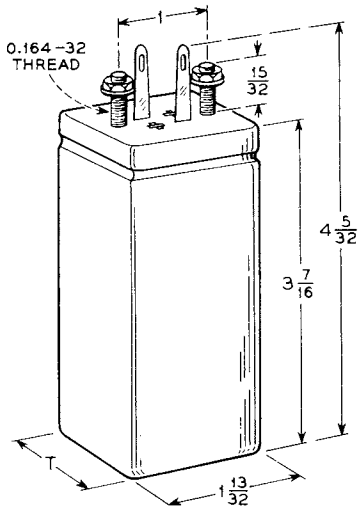

Codes	T
473	25/32
475, 476	15/32

CAPACITANCES

Code	Capacitance - mf Maximum	Capacitance - mf Minimum	Frequency kc	Remarks
475AD	0.914	0.878	1.0	
475D	0.871	0.837	1.0	
475CB	0.810	0.777	1.0	
475C	0.765	0.735	1.0	
475CA	0.727	0.713	1.0	
475AE	0.4947	0.4753	1.0	
475AL	0.4444	0.4356	2.5	
476B	0.4040	0.3960	1.0	See Note 1
475AK	0.4040	0.3960	2.5	
475BW	0.3889	0.3811	1.0	
475AP	0.362	0.348	1.0	
475A	0.306	0.300	1.0	
475F	0.2142	0.2058	1.0	
475AM	0.182	0.174	1.0	
475BY	0.1690	0.1624	1.0	
475CC	0.1414	0.1386	1.0	
475AF	0.132	0.128	1.0	
475B	0.100	0.094	1.0	
475BU	0.09090	0.08910	2.5	
475AJ	0.07070	0.06930	2.5	
475N	0.0662	0.0636	1.0	
475AH	0.06060	0.05940	2.5	
475BT	0.05050	0.04950	2.5	
475BR	0.04545	0.04455	5.0	
475AG	0.04040	0.03960	2.5	
475CD	0.0387	0.0373	1.0	
475R	0.0372	0.0357	1.0	
475BS	0.02525	0.02475	1.0	
475AA	0.02361	0.02337	2.5	
476A	0.02353	0.02307	1.0	See Note 1
475AC	0.02045	0.02025	2.5	
475CE	0.01827	0.01791	10.0	
475K	0.0167	0.0161	1.0	
475Y	0.01534	0.01518	2.5	
475W	0.01362	0.01348	2.5	
475AB	0.01327	0.01313	2.5	
475U	0.00977	0.00967	2.5	
475AS	0.0077	0.0074	1.0	
473C	0.0428 0.0510 0.0612	0.0412 0.0490 0.0588	0.9	One common terminal.

NOTES

1. Working voltages are 300 dc or ac at frequencies of 60 cps or less.

TCI Library www.telephonecollectors.info

TCI Library www.telephonecollectors.info

DATA SHEET DESCRIPTION

PAPER, PRECISION, C, 1 SECTION, HIGH Q

TABLE 1.14

Precision paper capacitors potted in in metal cans. No mounting studs or lugs. No finish on can.

Principal Applications: Transmission equalizers, filters and networks.

Operating Temperature Range: 0° to +120°F.

Rated working voltages are 200dc or 180ac at frequencies of 60 cps or less. Capacitors for which test voltages are specified are capable of withstanding occasional impulses of short duration having peak values as high as those of the test voltages.

Frequencies at which capacitances are measured are shown in the tables.

Types CR and CS are NON-PREFERRED.

CAPACITANCES

Code	Capacitance - mf Maximum	Capacitance - mf Minimum	Freq kc	Test Voltage	Can Mtl
CW45	0.7133	0.7062	5.0		A
CW18	0.5137	0.5085	10.0		A
CW46	0.4858	0.4810	2.5		A
CW84	0.4760	0.4666	2.5		A
CW17	0.4669	0.4622	10.0		A
CW44	0.4534	0.4489	5.0		A
CW83	0.4183	0.4100	2.5		A
CT42	0.3928	0.3850	2.5		A
CT41	0.3685	0.3613	2.5		A
CT40	0.3240	0.3176	2.5		A
CT28	0.2855	0.2799	5.0		A
CT39	0.2621	0.2569	2.5		A
CW89	0.2288	0.2242	2.5		A
CT1	0.2311	0.2221	1.0		A
CT23	0.2236	0.2191	1.0		A
CT13	0.2187	0.2144	2.5		A
CW88	0.1944	0.1925	2.5		A
CT34	0.1573	0.1557	1.0		A
CW87	0.1549	0.1519	2.5		A
CT33	0.1529	0.1499	2.5		A
CR107	0.1501	0.1487	1.0		T
CR106	0.1411	0.1397	1.0		T
CR16	0.1367	0.1353	4.0		T
CT75	0.1373	0.1346	5.0	1500 dc	A
CT74	0.1368	0.1341	5.0	1500 dc	A
CT73	0.1354	0.1327	10.0	1500 dc	A
CT72	0.1347	0.1320	10.0	1500 dc	A
CT71	0.1329	0.1302	5.0	1500 dc	A
CT32	0.1307	0.1280	2.5		A
CR132	0.1299	0.1249	10.0		T
CR129	0.1191	0.1179	3.0		T
CR128	0.1182	0.1170	3.0		T
CR138	0.1159	0.1147	20.0		T
CT31	0.1155	0.1131	2.5		A
CR15	0.1093	0.1083	4.0		T
CR130	0.1095	0.1051	10.0		T
CR108	0.1008	0.09980	0.9		T
CR121	0.09914	0.09816	2.5		T
CR127	0.09756	0.09659	3.0		T
CR34	0.09516	0.09422	5.0		C
CT22	0.09521	0.09332	2.5		A
CT21	0.09315	0.09131	5.0		A
CR105	0.09069	0.08979	1.0		T
CT30	0.08943	0.08766	2.5		A
CR104	0.08640	0.08554	1.0		T
CT29	0.08650	0.08478	2.5		A
CR12	0.08558	0.08222	30.0		C
CR113	0.08200	0.08118	0.9		T
CR126	0.08169	0.08088	3.0		T
CT20	0.08060	0.07900	5.0		A
CR137	0.07956	0.07876	20.0		T
CT70	0.07859	0.07780	5.0	1500 dc	A
CR131	0.08018	0.07702	10.0		T
CT12	0.07786	0.07632	5.0	1500 ac	A
CR125	0.07670	0.07594	3.0		T
CT43	0.07698	0.07545	2.5		A
CR14	0.07557	0.07481	4.0		T
CT11	0.07594	0.07443	5.0	1500 ac	A
CT35	0.07563	0.07414	5.0		A
CT38	0.06922	0.06852	1.0		A
CT69	0.06711	0.06643	5.0	1500 dc	A
CT10	0.06703	0.06570	5.0	1500 ac	A
CR103	0.06565	0.06499	1.0		T
CR28	0.06216	0.06154	5.0		T
CR122	0.06196	0.06134	10.0		T

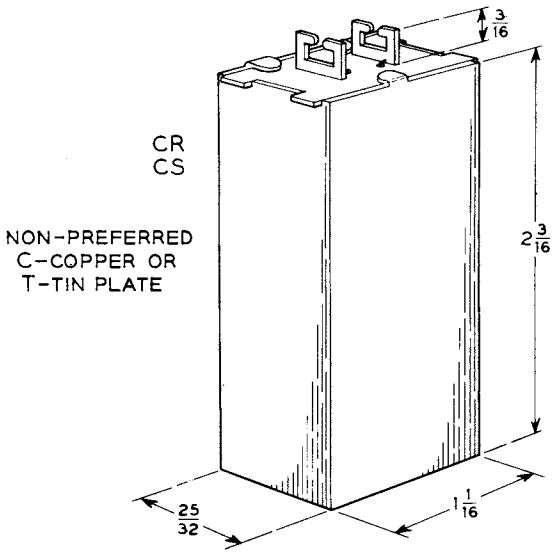

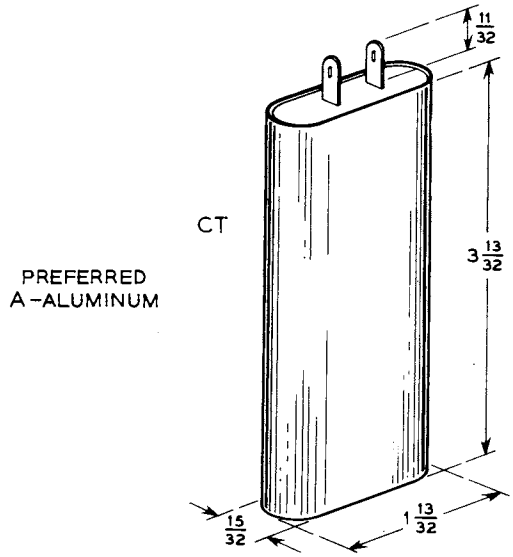

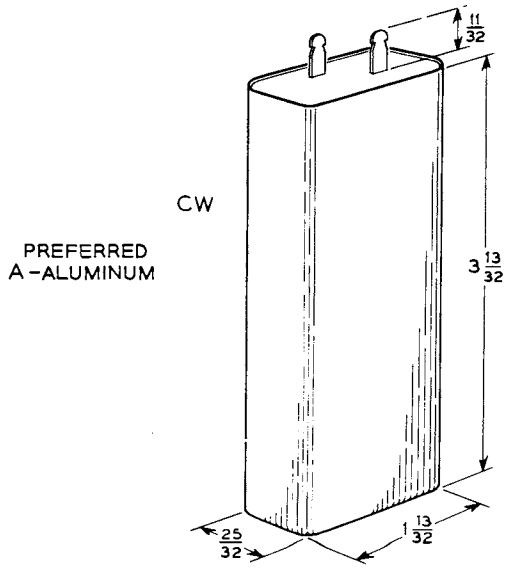

TCI Library www.telephonecollectors.info

TABLE 1.14 **PAPER, PRECISION, C, 1 SECTION, HIGH Q**

Code	Capacitance - mf Maximum	Capacitance - mf Minimum	Freq kc	Test Voltage	Can Mtl
CR102	0.06172	0.06110	1.0		T
CT25	0.06077	0.06016	1.0		A
CS3	0.0605	0.0593	2.5	1000 ac	T
CR101	0.05771	0.05713	1.0		T
CS13	0.05662	0.05606	5.0	1000 ac	T
CT68	0.05663	0.05605	5.0	1500 dc	A
CR112	0.05552	0.05496	0.9		T
CR11	0.05515	0.05461	30.0		C
CR27	0.05502	0.05446	5.0		T
CR136	0.05416	0.05361	20.0		T
CT78	0.05425	0.05317	5.0	2000 dc	A
CS1	0.0541	0.0531	2.5	1000 ac	T
CR29	0.05169	0.05117	5.0		T
CR111	0.05144	0.05092	0.9		T
CT77	0.05046	0.04994	5.0	2000 dc	A
CT67	0.04978	0.04927	5.0	1500 dc	A
CS9	0.04996	0.04898	5.0	1000 ac	T
CR31	0.04937	0.04887	5.0		T
CS4	0.0490	0.0480	10.0	1000 ac	T
CR124	0.04774	0.04726	3.0		T
CR139	0.04820	0.04724	20.0		C
CS12	0.04766	0.04718	5.0	1000 ac	T
CT66	0.04766	0.04718	5.0	1500 dc	A
CR100	0.04689	0.04643	1.0		T
CR134	0.04546	0.04501	20.0		T
CR35	0.04515	0.04471	20.0		C
CT65	0.04494	0.04448	5.0	1500 dc	A
CS8	0.04492	0.04448	5.0	1000 ac	T
CR99	0.04458	0.04414	1.0		T
CR120	0.04344	0.04300	20.0		T
CR30	0.04276	0.04234	1.5		T
CT19	0.04273	0.04188	5.0		A
CR13	0.04211	0.04169	3.0		T
CT76	0.04139	0.04097	5.0	2000 dc	A
CT8	0.04047	0.04006	2.5		A
CT9	0.04043	0.04003	2.5		A
CR110	0.03966	0.03926	0.9		T
CR98	0.03827	0.03789	1.0		T
CR22	0.03807	0.03769	10.0		C
CT64	0.03799	0.03760	5.0	1500 dc	A
CS33	0.03798	0.03760	5.0	1000 ac	T
CR135	0.03664	0.03626	20.0		T
CR109	0.03535	0.03499	0.9		T
CR25	0.03446	0.03412	20.0		C
CT63	0.03406	0.03371	5.0	1500 dc	A
CS23	0.03405	0.03371	5.0	1000 ac	T
CT14	0.03356	0.03321	0.5		A
CT62	0.03275	0.03241	5.0	1500 dc	A
CS7	0.03291	0.03225	5.0	1000 ac	T
CS32	0.03254	0.03222	5.0	1000 ac	T
CT61	0.03255	0.03221	5.0	1500 dc	A
CR119	0.03181	0.03149	20.0		T
CT60	0.03164	0.03132	5.0	1500 dc	A
CS22	0.03164	0.03132	5.0	1000 ac	T
CR24	0.03083	0.03053	10.0		C

Code	Capacitance - mf Maximum	Capacitance - mf Minimum	Freq kc	Test Voltage	Can Mtl
CR33	0.03037	0.03007	5.0		C
CR97	0.02869	0.02841	1.0		T
CT15	0.02852	0.02822	0.5		A
CS2	0.0285	0.0279	10.0	1000 ac	T
CR96	0.02795	0.02767	1.0		T
CT18	0.02795	0.02739	5.0		A
CR95	0.02735	0.02707	1.0		T
CT59	0.02672	0.02644	5.0	1500 dc	A
CS21	0.02669	0.02643	7.0	1000 ac	T
CR32	0.02616	0.02590	20.0		T
CR94	0.02577	0.02551	1.0		T
CS20	0.02501	0.02477	5.0	1000 ac	T
CT58	0.02501	0.02475	5.0	1500 dc	A
CR10	0.02499	0.02449	30.0		C
CT16	0.02454	0.02428	0.5		A
CR9	0.02322	0.02276	30.0		C
CR4	0.02218	0.02196	20.0		C
CT37	0.02228	0.02183	5.0		A
CR93	0.02172	0.02150	1.0		T
CT17	0.02134	0.02112	0.5		A
CR92	0.02123	0.02101	1.0		T
CT26	0.02096	0.02076	10.0		A
CR91	0.019973	0.019767	1.0		T
CS11	0.01955	0.01935	5.0	1000 ac	T
CT57	0.01955	0.01935	5.0	1500 dc	A
CR90	0.019551	0.019349	1.0		T
CR21	0.01884	0.01866	20.0		C
CS10	0.01864	0.01846	5.0	1000 ac	T
CT56	0.01864	0.01845	5.0	1500 dc	A
CR89	0.018114	0.017926	1.0		T
CR20	0.01807	0.01789	10.0		C
CT55	0.01771	0.01752	5.0	1500 dc	A
CS6	0.01779	0.01743	5.0	1000 ac	T
CR123	0.01704	0.01687	3.0		T
CR88	0.017029	0.016851	1.0		T
CR87	0.016697	0.016523	1.0		T
CS31	0.01664	0.01648	10.0	1000 ac	T
CT54	0.01664	0.01647	5.0	1500 dc	A
CS19	0.01658	0.01642	5.0	1000 ac	T
CR8	0.01595	0.01579	30.0		C
CR86	0.015762	0.015598	1.0		T
CR118	0.01547	0.01531	20.0		T
CR85	0.01527	0.01511	1.0		T
CR23	0.01521	0.01505	20.0		C
CT27	0.01488	0.01473	5.0		A
CS30	0.01444	0.01430	7.0	1000 ac	T
CT53	0.01443	0.01428	10.0	1500 dc	A
CT52	0.01381	0.01366	10.0	1500 dc	A
CS29	0.01379	0.01365	10.0	1000 ac	T
CR84	0.013702	0.013558	2.0		T
CR7	0.01354	0.01340	30.0		C
CR83	0.013471	0.013329	2.0		T
CS18	0.01320	0.01306	10.0	1000 ac	T
CT51	0.01320	0.01306	10.0	1500 dc	A
CR82	0.012938	0.012802	1.0		T

A - Aluminum C - Copper T - Tin plate

TCI Library www.telephonecollectors.info

PAPER, PRECISION, C, 1 SECTION, HIGH Q

TABLE 1.14

Code	Capacitance - mf Maximum	Capacitance - mf Minimum	Freq kc	Test Voltage	Can Mtl
CS28	0.01289	0.01277	10.0	1000 ac	T
CT50	0.01290	0.01276	10.0	1500 dc	A
CS5	0.01293	0.01267	10.0	1000 ac	T
CR117	0.01278	0.01266	20.0		T
CS27	0.01261	0.01249	10.0	1000 ac	T
CT49	0.01260	0.01246	10.0	1500 dc	A
CR81	0.012567	0.012434	2.0		T
CS17	0.01255	0.01243	10.0	1000 ac	T
CR133	0.01196	0.01184	20.0		T
CR80	0.011923	0.011797	1.0		T
CR6	0.01144	0.01122	30.0		C
CR79	0.01119	0.01107	2.0		T
CS16	0.01061	0.01051	5.0	1000 ac	T
CT48	0.01061	0.01050	5.0	1500 dc	A
CR78	0.010345	0.010235	2.0		T
CS26	0.01032	0.01022	5.0	1000 ac	T
CT47	0.01032	0.01021	5.0	1500 dc	A
CT36	0.01028	0.01017	5.0		A
CR77	0.009623	0.009519	2.0		T
CR76	0.009435	0.009333	2.0		T
CR75	0.009297	0.009197	2.0		T
CR19	0.008819	0.008731	20.0		C
CT46	0.008770	0.008674	10.0	1500 dc	A
CS15	0.008756	0.008668	10.0	1000 ac	T
CR74	0.008666	0.008572	2.0		T
CS25	0.008262	0.008180	10.0	1000 ac	T
CT45	0.008266	0.008175	10.0	1500 dc	A
CS14	0.008231	0.008149	10.0	1000 ac	T
CR73	0.008012	0.007924	2.0		T
CR72	0.007916	0.007830	2.0		T
CS24	0.007627	0.007551	10.0	1000 ac	T
CT44	0.007631	0.007547	10.0	1500 dc	A
CR71	0.007367	0.007283	2.0		T
CR70	0.007282	0.007202	1.0		T
CR69	0.006887	0.006811	2.0		T
CR68	0.006802	0.006726	2.0		T
CR67	0.006642	0.006568	2.0		T
CR66	0.006429	0.006357	2.0		T
CR65	0.006253	0.006183	1.0		T
CR64	0.005984	0.005916	2.0		T
CR63	0.005914	0.005848	2.0		T
CR62	0.005646	0.005582	2.0		T
CR116	0.005414	0.005360	2.0		T
CR61	0.005247	0.005187	3.0		T
CR60	0.005191	0.005131	3.0		T
CR59	0.004869	0.004793	2.0		T
CR58	0.004776	0.004702	1.0		T
CR57	0.004648	0.004576	3.0		T
CR56	0.004600	0.004528	3.0		T
CT24	0.004295	0.004227	1.0		A
CR55	0.004233	0.004167	2.0		T
CR54	0.004138	0.004072	3.0		T
CR53	0.004098	0.004034	3.0		T
CR52	0.004018	0.003954	3.0		T
CR51	0.003982	0.003918	1.0		T
CR50	0.003811	0.003751	3.0		T
CR49	0.003776	0.003716	3.0		T
CR48	0.003716	0.003656	3.0		T
CR47	0.003565	0.003507	3.0		T
CR46	0.003412	0.003356	1.0		T
CR45	0.003287	0.003233	3.0		T
CR44	0.002928	0.002880	3.0		T
CR43	0.002882	0.002834	1.0		T
CR42	0.002699	0.002653	3.0		T
CR115	0.002503	0.002479	3.0		T
CR41	0.002402	0.002360	1.0		T
CR114	0.002221	0.002199	3.0		T
CR40	0.002059	0.002023	1.0		T
CR39	0.001862	0.001828	1.0		T
CR38	0.001553	0.001523	1.0		T
CR37	0.001331	0.001305	1.0		T
CR36	0.001064	0.001042	1.0		T

A - Aluminum C - Copper T - Tin plate

TCI Library www.telephonecollectors.info

TCI Library www.telephonecollectors.info

DESCRIPTION

Precision paper capacitors potted in asphalt in aluminum cans. No mounting studs or lugs. No finish on cans.

Principal Applications: Transmission equalizers, filters and networks.

Operating Temperature Range: 0° to +120°F.

Rated working voltages are 200dc or 180ac at frequencies of 60 cps or less.

Frequencies at which capacitances are measured are shown in the tables.

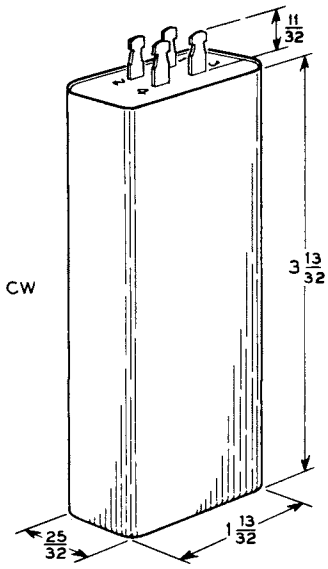

CAPACITANCES

TWO SEPARATE UNITS

Code	Capacitance - mf				Freq kc
	1-2		3-4		
	Maximum	Minimum	Maximum	Minimum	
CW2	0.5429	0.5217	0.5429	0.5217	1.0
CW12	0.3886	0.3847	0.3886	0.3847	2.5
CW16	0.3819	0.3781	0.3819	0.3781	5.0
CW82	0.3482	0.3412	0.3482	0.3412	2.5
CW81	0.3380	0.3313	0.3380	0.3313	2.5
CW80	0.3291	0.3225	0.3291	0.3225	1.0
CW11	0.3257	0.3224	0.3257	0.3224	2.5
CW10	0.3062	0.3031	0.3062	0.3031	2.5
CW28	0.2680	0.2653	0.2680	0.2653	5.0
CW7	0.1978	0.1958	0.2297	0.2274	2.5
CW85	0.1898	0.1860	0.5165	0.5062	1.0
CW5	0.1834	0.1816	0.1834	0.1816	2.5
CW79	0.1803	0.1767	0.1803	0.1767	2.5
CW78	0.1711	0.1677	0.1711	0.1677	1.0
CW4	0.1469	0.1454	0.1469	0.1454	2.5
CW9	0.1316	0.1303	0.2633	0.2606	2.5
CW77	0.1276	0.1250	0.1276	0.1250	2.5
CW76	0.1195	0.1171	0.1195	0.1171	2.5
CW75	0.1135	0.1112	0.1135	0.1112	1.0
CW25	0.1904	0.1885	0.1069	0.1058	2.5
CW19	0.3684	0.3612	0.09781	0.09588	20.0
CW62	0.08363	0.08279	0.08194	0.08112	0.5
CW8	0.0798	0.0790	0.2502	0.2476	2.5
CW74	0.07162	0.07020	0.07162	0.07020	1.0
CW15	0.1335	0.1321	0.06670	0.06604	2.5
CW34	0.05870	0.05825	0.05870	0.05825	1.0
CW3	0.05839	0.05781	0.1394	0.1380	2.5
CW20	0.08481	0.08314	0.05715	0.05603	20.0
CW1	0.05624	0.05404	0.05624	0.05404	1.0
CW73	0.05213	0.05109	0.05213	0.05109	2.5
CW64	0.05044	0.04993	0.04942	0.04892	1.0
CW22	0.03738	0.03663	0.06743	0.06609	20.0
CW66	0.03370	0.03336	0.03302	0.03268	1.0
CW21	0.02950	0.02891	0.04822	0.04726	20.0
CW68	0.02409	0.02384	0.02361	0.02337	1.0
CW70	0.01808	0.01789	0.01772	0.01753	1.0
CW35	0.02426	0.02402	0.01547	0.01531	1.0
CW36	0.01467	0.01451	0.01599	0.01583	1.0
CW72	0.01407	0.01392	0.01379	0.01364	1.0
CW29	0.01065	0.01054	0.01065	0.01054	5.0
CW51	0.009948	0.009840	0.01415	0.01401	1.0
CW37	0.009814	0.009715	0.01625	0.01609	1.0
CW23	0.03458	0.03389	0.00919	0.00901	1.0
CW52	0.007744	0.007658	0.01430	0.01416	1.0
CW38	0.007010	0.006930	0.01640	0.01624	1.0
CW39	0.005300	0.005220	0.01650	0.01634	1.0
CW6	0.005226	0.005174	0.1978	0.1958	2.5
CW40	0.004125	0.004065	0.01656	0.01640	1.0
CW41	0.003306	0.003251	0.01660	0.01644	2.5
CW42	0.002710	0.002663	0.01665	0.01647	2.5
CW54	0.02084	0.02062	0.002194	0.002156	1.0

TCI Library www.telephonecollectors.info

TABLE 1.15 **PAPER, PRECISION, C, 2-3 SECTIONS, HIGH Q**

THREE UNITS, COMMON TERMINAL

Code	Capacitance - mf						Freq kc
	1-4		2-4		3-4		
	Maximum	Minimum	Maximum	Minimum	Maximum	Minimum	
CW24	0.02042	0.02021	0.1806	0.1788	0.02675	0.02648	2.5
CW86	0.02872	0.02842	0.01632	0.01614	0.02308	0.02284	1.0
CW27	0.002398	0.002356	0.03202	0.03170	0.001201	0.001177	5.0

THREE UNITS IN SERIES

Code	Capacitance - mf						Freq kc
	1-2		2-3		3-4		
	Maximum	Minimum	Maximum	Minimum	Maximum	Minimum	
CW13	0.1080	0.1070	0.1736	0.1718	0.07657	0.07581	2.5
CW14	0.07687	0.07611	0.2609	0.2583	0.07184	0.07112	2.5
CW55	0.04101	0.04059	0.01618	0.01602	0.2734	0.2707	0.5
CW26	0.09518	0.09423	0.01338	0.01324	0.04173	0.04131	5.0
CW56	0.02474	0.02448	0.009761	0.009657	0.2781	0.2753	1.0
CW57	0.01653	0.01635	0.006523	0.006451	0.2804	0.2776	1.0
CW58	0.01181	0.01170	0.004674	0.004602	0.2817	0.2789	1.0
CW59	0.008864	0.008768	0.003509	0.003453	0.2826	0.2798	1.0
CW47	0.04580	0.0434	0.003496	0.003438	0.01161	0.01149	1.0
CW60	0.006894	0.006819	0.002731	0.002685	0.2831	0.2803	1.0
CW63	0.05044	0.04993	0.002457	0.002415	0.005293	0.005233	1.0
CW30	0.002366	0.002325	0.03476	0.03441	0.002366	0.002325	0.5
CW43	0.008121	0.007999	0.002301	0.002261	0.007454	0.007343	1.0
CW61	0.08363	0.08279	0.004071	0.004007	0.002224	0.002186	0.5
CW53	0.002194	0.002156	0.02084	0.02062	0.02796	0.02768	1.0
CW48	0.02767	0.02739	0.002113	0.002077	0.01290	0.01276	1.0
CW31	0.001843	0.01810	0.02953	0.02922	0.001843	0.001810	0.5
CW65	0.03370	0.03336	0.001643	0.001613	0.006843	0.006767	1.0
CW32	0.001464	0.001435	0.02534	0.02508	0.001464	0.001435	0.5
CW49	0.01851	0.01831	0.001415	0.001387	0.01353	0.01341	1.0
CW33	0.001182	0.001158	0.02197	0.02174	0.001182	0.001158	0.5
CW67	0.02409	0.02384	0.001176	0.001152	0.007731	0.007647	1.0
CW50	0.01324	0.01310	0.001014	0.000992	0.01391	0.01377	1.0
CW69	0.01808	0.01789	0.000884	0.000863	0.008288	0.008198	1.0
CW71	0.01407	0.01392	0.000688	0.000671	0.008660	0.008566	1.0

TCI Library www.telephonecollectors.info

DATA SHEET **PAPER, PRECISION, C, LUG MOUNTED** **TABLE 1.16**

DESCRIPTION

Precision paper capacitors potted in metal cans provided with mounting lugs.

Principal Applications: Transmission equalizers, filters and networks.

Operating Temperature Range: 0° to +120°F.

Rated Working Voltages:

Code	DC	AC*
CG	200	180
CH	300	300

* At frequencies of 60cps or less.

NON-PREFERRED TYPES

CAPACITANCES

Code	Capacitance - mf Maximum	Capacitance - mf Minimum	Frequency kc	Material of Can
CG18	0.1516	0.1456	1.8	T
CG17	0.1484	0.1426	0.5	T
CG16	0.1385	0.1329	1.8	T
CG54	0.1067	0.1025	0.5	T
CG57	0.102	0.098	0.9	T
CG54	0.10176	0.09777	0.5	T
CG20	0.09285	0.08571	3.0	C
CG114	0.08094	0.08013	20.0	T
CG5	0.0831	0.0797	0.5	T
CG56	0.0816	0.0784	0.5	T
CG9	0.0784	0.0752	0.5	T
CH4	0.0673	0.06663	5.0	C
CH5	0.06609	0.06543	5.0	C
CG19	0.06963	0.06428	3.0	C
CH2	0.06125	0.06065	5.0	C
CG33	0.0619	0.0593	0.9	T
CG1	0.05608	0.05388	0.5	T
CG35	0.04871	0.04679	0.9	T
CH6	0.04433	0.04389	5.0	C
CG7	0.04524	0.04346	0.5	T
CH1	0.04309	0.04267	5.0	C
CG3	0.04400	0.04228	0.5	T
CG38	0.04117	0.03955	0.9	T
CG10	0.03523	0.03385	0.9	T
CG111	0.03400	0.03367	20.0	T
CG40	0.03323	0.03191	0.9	T
CG113	0.03026	0.02995	20.0	T
CG6	0.02990	0.02870	0.5	T
CG46	0.02950	0.02834	1.1	T
CG34	0.02870	0.02756	0.9	T
CG32	0.02756	0.02648	0.9	T
CG48	0.02401	0.02307	1.1	T
CG36	0.02389	0.02295	0.9	T
CG51	0.02216	0.02128	1.3	T
CG39	0.01977	0.01899	0.9	T
CG55	0.1962	0.01884	0.5	T
CG37	0.01877	0.01803	0.9	T
CG53	0.01823	0.01751	1.3	T
CG41	0.01731	0.01663	1.1	T
CG12	0.01628	0.01564	1.3	T
CG11	0.01541	0.01479	1.3	T
CG47	0.01443	0.01385	1.1	T
CG45	0.01364	0.01310	1.1	T
CG49	0.01312	0.01260	1.3	T
CG14	0.01294	0.01242	1.8	T
CG13	0.01224	0.01176	1.8	T
CG110	0.01122	0.01078	20.0	C
CG52	0.01101	0.01057	1.3	T
CG8	0.01080	0.01036	0.5	T
CG15	0.01052	0.01010	1.8	T
CG50	0.01037	0.00995	1.3	T
CG60	0.0102	0.0098	0.9	T
CG109	0.00918	0.00882	20.0	C
CG2	0.007006	0.006732	0.5	T
CG65	0.00204	0.00196	0.9	T
CG64	0.00102	0.000980	0.9	T

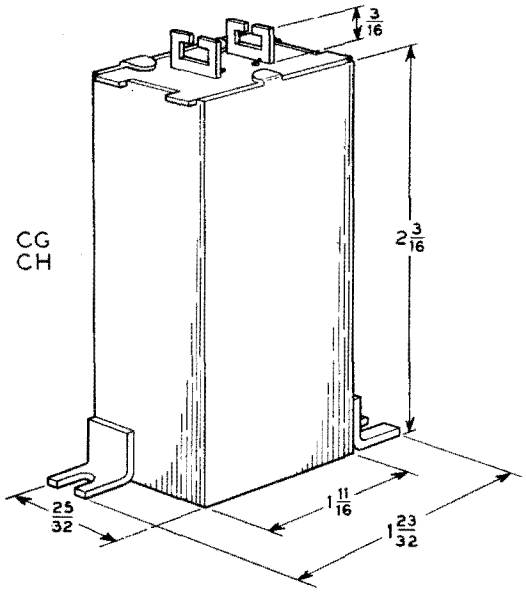

T – TIN PLATE
C – COPPER

TCI Library www.telephonecollectors.info

TCI Library www.telephonecollectors.info

DESCRIPTION

Mylar-film capacitors.

Types 511 and 520 are potted in synthetic gel in stud-mounted aluminum cans. One mounting stud is connected electrically to the can.

Type 516 is encased in a tubular metal can provided with a binding post at one end and a tipped cord at the other.

Type 525 is stud-mounted and encased in casting compound.

Principal Applications:

Types 511 and 520 in locations where operating temperature exceeds the maximum value recommended for wax impregnated paper capacitors.

Type 516 in lineman's test set where physical ruggedness is required.

Type 525 is used where a number of multi-unit capacitors are needed for impedance compensators, building-out pads and correctors at toll switching points.

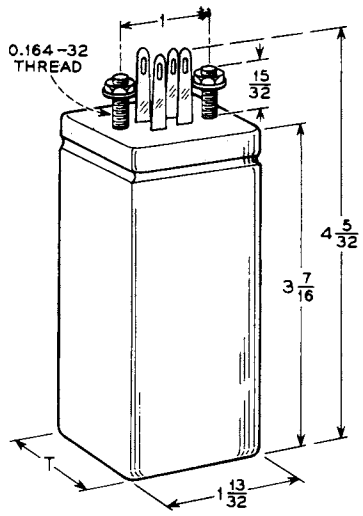

FIG.1

CAPACITANCES

Code	Capacitance Range mf	Working Voltage	Temperature Range °F	Fig	Dimensions - Inches Width	T	Height	Remarks
520A	2.50 to 2.00 2.50 to 2.00	250 dc	-60 +170	1	1-13/32	1-13/32	3-7/16	Two sections
511D	1.25 to 1.00	250 dc	-60 +150	1	1-13/32	15/32	3-7/16	
511F	0.625 to 0.50 0.625 to 0.50	250 dc	-60 +150	1	1-13/32	15/32	3-7/16	Two sections
511E	0.625 to 0.50	250 dc	-60 +150	1	1-13/32	15/32	3-7/16	
511C	0.2448 to 0.2352	250 dc	-60 +150	1	1-13/32	15/32	3-7/16	
511B	0.2040 to 0.1960	250 dc	-60 +150	1	1-13/32	15/32	3-7/16	
511A	0.1224 to 0.1176	250 dc	-60 +150	1	1-13/32	15/32	3-7/16	
516A	0.1 ±20%	250 dc	+150	-	33/64	dia	2-3/32	In tubular metal can.
525A	0.034 ±20% 0.020 ±20% 0.012 ±20% 0.007 ±20% 0.004 ±20% 0.002 ±33% 0.001 ±33%	300 dc or ac, 60 cps	-60 +150	-	10-5/8	1-23/32	2-3/8	Twelve complete capacitors in one block, each of which has seven sections with a common terminal.

TCI Library www.telephonecollectors.info

TCI Library www.telephonecollectors.info

DESCRIPTION

Lacquer coated mylar capacitors. Wire leads.
Principal Application: Electronic circuits.
Operating Temperature Range: -60° to +150°F.

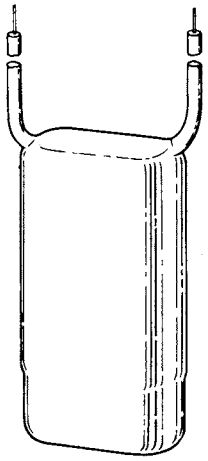

FIG. 1

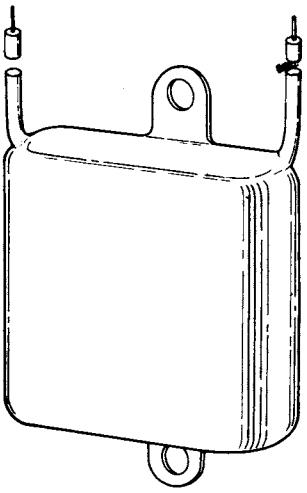

FIG. 2

CAPACITANCES

Code	Capacitance Range mf Max	Capacitance Range mf Min	Working Voltages DC	Working Voltages AC*	Approx Lead Length	Fig	Dimensions - Inches Width	Dimensions - Inches Depth	Dimensions - Inches Height	Remarks
198A	0.625	0.500	200	180	2-1/8	1	27/32	3/8	1-3/4	
198B	0.625	0.500	200	180	2-1/8	1	27/32	3/8	1-3/4	Spade tips.
198C	0.500	0.400	200	180	2-1/8	1	27/32	3/8	1-3/4	Spade tips.
361C	0.150	0.100	200	180	3	1	9/16	5/16	1-5/16	
152A	0.115	0.085	200	180	6	2	1	5/16	1	Spade tips. 50 ohm resistance in series.
152B	0.115	0.085	200	180	3	2	1	5/16	1	
363A	0.115	0.085	300	-	3-3/4	1	5/8	3/8	1-7/8	
312A	0.115	0.085	300	300	6	2	1-1/8	1/4	1-1/4	
313A	0.115 0.115	0.085 0.085	300	300	6	2	1-1/8	1/2	1-1/4	Two separate sections.
313B	0.115 0.115 0.115	0.085 0.085 0.085	300	300	6	2	1-1/8	3/4	1-1/4	Three separate sections.
313C	0.115 0.115 0.012	0.085 0.085 0.008	300	300	6	2	1-1/8	3/4	1-1/4	Three separate sections.
361A	0.090	0.060	200	180	3	1	9/16	5/16	1-5/16	
312B	0.069	0.051	300	300	6	2	1-1/8	1/4	1-1/4	
361D	0.050	0.037	200	180	3	1	9/16	5/16	1-5/16	
361F	0.0197	0.0145	200	180	3	1	9/16	1/4	1-5/16	
361B	0.0185	0.0135	300	300	3	1	9/16	1/4	1-5/16	
362B	0.015	0.010	300	-	3	1	9/16	3/16	1-5/16	
362A	0.0138	0.0102	300	-	3	1	9/16	3/16	1-5/16	
361E	0.0131	0.0097	200	180	3	1	9/16	1/4	1-5/16	
152C	0.012	0.008	300	300	3	2	1	5/16	1	One tip.
313D	0.012 0.012 0.012	0.008 0.008 0.008	300	300	6	2	1-1/8	3/4	1-1/4	Three separate sections.

*At frequencies of 60cps or less.

TCI Library www.telephonecollectors.info

TCI Library www.telephonecollectors.info

DESCRIPTION

Lacquer coated mylar capacitors. Wire leads.
Principal Application: Electronic circuits.
Operating Temperature Range: -20° to +150°F.

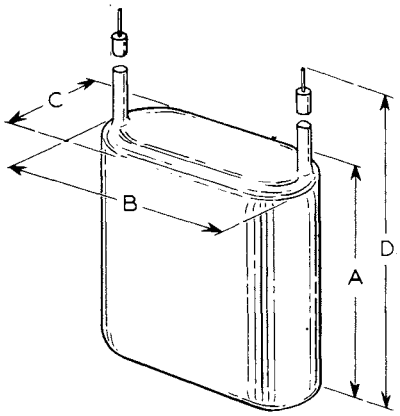

FIG. 1

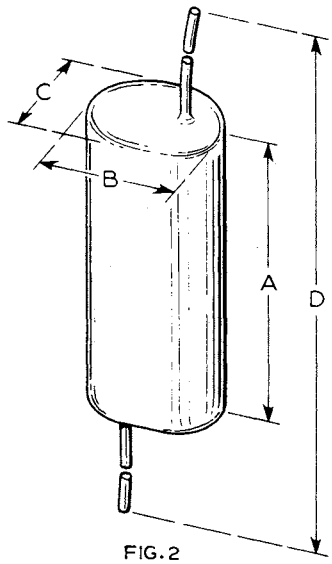

FIG. 2

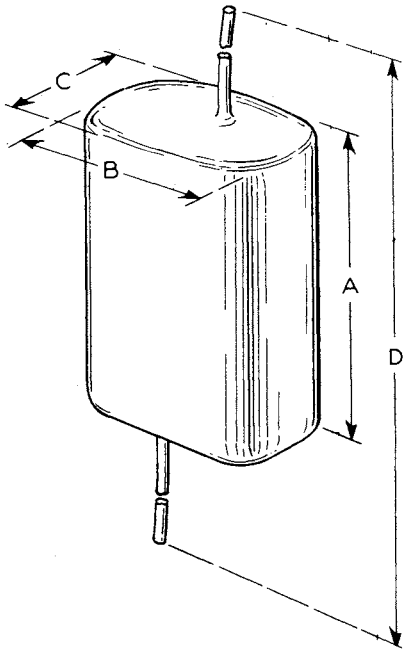

FIG. 3

CAPACITANCES

Code	Capacitance Range mf Max	Capacitance Range mf Min	Working DC Volts	Fig	Dimensions-Inches A	B	C	D	Remarks
526A	0.6	0.4	600	1	1-7/8	1-3/4	3/4	3-7/8	
527A	0.184	0.136	250	2	1-1/4	5/8	3/8	5	
528S	0.11	0.09	125	3	9/16	0.395	0.260	2-11/16	
528R	0.1010	0.084	125	3	9/16	0.395	0.240	2-11/16	
529B	0.0616	0.0504	600	2	1-1/4	5/8	5/16	5	Pair, matched to 1%.
528P	0.0550	0.0450	125	3	9/16	0.313	0.180	2-11/16	
528N	0.0522	0.0428	125	3	9/16	0.313	0.170	2-11/16	
528M	0.0481	0.0393	125	3	9/16	0.313	0.160	2-11/16	
527B	0.046	0.034	600	2	1-1/4	1/2	5/16	5	
528L	0.0436	0.0356	125	3	9/16	0.313	0.150	2-11/16	
530A	0.036	0.024	250	3	9/16	0.395	0.140	3	Pair, matched to 5%.
529A	0.0297	0.0243	600	2	1-1/4	1/2	1/4	5	Pair, matched to 1%.
528K	0.0286	0.0234	125	3	9/16	0.313	0.110	2-11/16	
528J	0.0246	0.0202	125	3	9/16	0.250	0.120	2-11/16	
528H	0.0223	0.0183	125	3	9/16	0.250	0.120	2-11/16	
528G	0.0211	0.0173	125	3	9/16	0.250	0.110	2-11/16	
528F	0.0200	0.0164	125	3	9/16	0.250	0.110	2-11/16	
530B	0.018	0.012	250	3	9/16	0.375	0.140	3	Pair, matched to 5%.
528E	0.0168	0.0138	125	3	9/16	0.250	0.100	2-11/16	
531A	0.0140	0.0131	125	3	11/16	0.200	0.150	2-11/16	
528D	0.0134	0.0110	125	3	9/16	0.250	0.090	2-11/16	
530C	0.012	0.008	250	3	9/16	3/8	1/8	3	Pair, matched to 5%.
528C	0.01120	0.00919	125	3	9/16	0.188	0.09	2-11/16	
527C	0.011	0.009	600	2	1-1/4	1/2	1/8	5	
528B	0.0102	0.0084	125	3	9/16	0.188	0.09	2-11/16	
528A	0.00115	0.00085	600	3	9/16	0.188	0.100	2-11/16	

TCI Library www.telephonecollectors.info

TCI Library www.telephonecollectors.info

DATA SHEET **MICA, PRECISION POTTED SILVERED, A, LUGS, 1 SECTION** **TABLE 3.01**

DESCRIPTION

Precision silvered mica capacitors potted in wax in aluminum cans provided with mounting lugs.

Principal Application: Transmission equalizers, filters and networks.

Operating Temperature Range: 0° to +120°F.

Rated working voltages, except as otherwise noted, are 200 dc or ac at frequencies of 60 cps or less.

CAPACITANCES

Code	Capacitance - mmf		Voltages		Remarks
	Maximum	Minimum	DC	AC*	
AL16	Nominal	493,000			
AL12	300,600	299,400			
AL15	240,500	239,500			
AN33	211,600	210,600			
AL14	200,400	199,600			
AN23	155,300	154,700			
AN32	155,400	154,600			
AL13	145,300	144,700			
AR84	127,700	127,100			
AN11	124,000	123,400			
AN24	90,180	89,820			
AN1	57,430	57,150			
AN15	55,160	54,940			
AN22	46,350	46,150			
AN27	45,150	44,950			
AR90	37,800	37,660			
AR67	35,850	35,690			
AN25	34,570	34,430			
AR69	34,070	33,930			
AR25	32,070	31,930			
AN16	31,690	31,560			
AN18	31,410	31,270			
AN26	30,000	29,880			
AN19	29,610	29,480			
AP5	29,380	29,260	300	300	
AN31	27,870	27,750			
AP1	27,360	27,240	300	300	
AR65	26,870	26,750			
AR80	26,767	26,653			
AN7	26,664	26,136			
AN17	25,310	25,190			
AR70	25,190	25,070			
AN20	25,020	24,900			Note 1
AN8	25,149	24,651			
AR64	24,660	24,560			
AN30	24,500	24,400			
AN14	24,320	24,220			
AR34	23,910	23,810			
AN13	23,490	23,390			
AR71	22,130	22,030			
AR48	21,830	21,730			
AR47	21,520	21,420			
AR57	21,480	21,380			
AR89	21,460	21,360			
AN29	21,200	21,100			
AR46	21,090	20,990			
AR45	20,760	20,660			
AR68	20,590	20,490			
AR54	20,360	20,260			
AP2	20,350	20,250	300	300	
AN28	20,240	20,140			
AP11	19,710	19,630	300	300	
AR28	19,610	19,530			
AR44	19,430	19,350			
AR88	19,350	19,250			
AR49	19,220	19,130			
AR43	19,040	18,960			
AN21	18,720	18,620			
AR42	18,700	18,620			
AR41	18,360	18,280			
AR29	18,330	18,250			
AS14	18,090	18,010	300	300	
AR35	17,790	17,710			
AR55	17,760	17,680			
AP7	17,550	17,450	300	300	

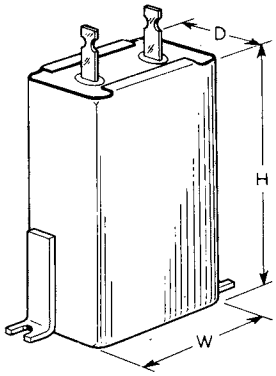

Code	Dimensions - Inches		
	W	D	H
AG, AT	1-3/16	1-1/32	1-7/16
AL	1-25/32	1-13/32	2-17/32
AN, AP	1-25/32	1-1/32	2-17/32
AR, AS	1-25/32	1-1/32	2-1/32
AU	1-3/16	21/32	1-7/16

NOTES

1. "G" terminal grounded to can.

* At frequencies of 60 cps or less.

TCI Library www.telephonecollectors.info

TABLE 3.01 **MICA, PRECISION POTTED SILVERED, A, LUGS, 1 SECTION**

Code	Capacitance - mmf		Voltages		Remarks
	Maximum	Minimum	DC	AC*	
AP10	17,270	17,190	300	300	
AR81	17,128	17,052			
AR50	16,890	16,810			
AR72	16,610	16,530			
AS17	15,650	15,570	300	300	
AR73	15,600	15,520			
AR74	15,030	14,950			
AR87	14,950	14,870			
AR58	14,670	14,590			Note 1
AR40	14,480	14,420			
AR82	14,403	14,337			
AR30	14,050	13,990			
AR51	14,020	13,960			
AR39	13,920	13,860			
AR36	13,600	13,540			
AR56	13,200	13,130			
AR63	13,000	12,940			
AS18	12,970	12,910	300	300	
AR32	12,960	12,900			
AP8	12,960	12,900	300	300	
AR75	12,190	12,130			
AR76	11,760	11,700			
AP3	11,350	11,290	300	300	
AR77	11,290	11,230			
AR86	11,170	11,110			
AR52	11,150	11,100			
AP4	11,140	11,080	300	300	
AR62	10,330	10,290			
AR83	10,030	9970			
AR53	9663	9621			
AR78	9101	9059			
AR79	8479	8441			
AR85	8271	8229			
AP9	7745	7711	300	300	
AS16	7216	7182	300	300	
AR24	7139	7105			
AR37	5628	5596			
AR23	5244	5218			
AR59	5139	5113			
AS20	Nominal	5066	300	300	
AR21	4935	4911			
AR22	4785	4761			
AG22	4727	4703			
AR20	4490	4468			
AR60	4237	4215			Note 1
AG9	4012	3988			
AS19	3319	3301	300	300	
AS7	3256	3224	500	500	
AS6	3171	3153	500	500	
AR61	3064	3046			Note 1
AG8	3010	2990			
AS5	2953	2933	500	500	
AR19	2159	2145			
AG7	2008	1992			
AG20	1880	1868			Note 1
AR66	1819	1807			
AR2	1788	1776			
AR9	1771	1759			
AS15	1762	1750	300	300	
AR1	1392	1382			
AR8	1252	1242			
AS12	1217	1208	300	300	
AG18	1202	1193			
AR4	1080	1070			
AG14	1048	1040			

Code	Capacitance - mmf		Voltages		Remarks
	Maximum	Minimum	DC	AC*	
AR10	1048	1038			
AG6	1006	994			
AR3	961	953			
AT1	921	913	300	300	
AG17	888	880			
AR18	878	870			Note 1
AS3	877	869	500	500	
AS2	866	858	500	500	
AR7	859	851			
AR12	845	837			
AG16	839	831			
AR11	833	825			
AG21	804	796			
AG12	778	762			
AR13	766	758			
AR14	731	723			
AR17	689	681			
AR6	674	666			
AR38	657	649			
AR5	626	618			
AR16	562	553			
AR15	551	543			
AS11	492	486	500	500	
AG19	488	482			
AG5	405	395			
AU6	299.5	296.5			Note 1
AG4	305	295			
AU2	273	267			
AG3	205	195			
AU5	181	178.5			Note 1
AG15	162	157			
AU4	124.5	122			Note 1
AG2	105	95			
AU7	93	87			
AU1	70	66			
AG1	55	45			
AU3	28	22			

NOTE 1. "G" terminal grounded to can.

* At frequencies of 60 cps or less.

TCI Library www.telephonecollectors.info

DATA SHEET **MICA, PRECISION POTTED SILVERED, B, 1 SECTION** **TABLE 3.02**

DESCRIPTION

Precision silvered mica capacitors potted in wax in aluminum cans. Hard rubber top held in place by formed metal lips. No mounting lugs.

Principal Application: Transmission equalizers, filters and networks.

Operating Temperature Range: 0° to 120°F.

Rated working voltages are 200 dc or 180 ac at frequencies of 60 cps or less.

Frequencies at which the capacitances are measured are given in the tables.

CAPACITANCES

Code	Capacitance - mmf Maximum	Capacitance - mmf Minimum	Freq kc	Remarks
BL3	329,600	326,400	0.9	Note 1
BL2	200,400	199,600	0.9	Note 1
BN24	107,600	107,200	0.9	
BL1	100,200	99,800	0.9	Note 1
BN23	96,000	95,600	0.9	
BN22	89,530	89,170	0.9	
BN3	84,770	84,430	10.0	
BR78	81,170	80,830	0.9	
BN15	79,000	78,200	0.9	
BN1	74,450	74,150	10.0	
BN12	69,440	69,160	0.9	
BN16	68,963	68,678	10.0	
BN14	63,400	63,140	0.9	Note 2
BR45	60,120	59,880	20.0	Note 1
BN17	57,430	57,150	10.0	
BN21	56,710	56,470	0.9	
BN11	41,210	41,030	0.9	
BR1	40,460	40,280	20.0	
BW16	34,930	34,770	20.0	
BW44	33,340	33,180	20.0	
BN13	32,690	32,550	0.9	
BR2	31,700	31,560	20.0	
BR7	31,430	31,290	10.0	
BN10	31,000	30,860	10.0	
BR44	30,060	29,940	20.0	Note 1
BW46	27,700	27,580	20.0	
BR11	27,590	27,470	20.0	
BN9	25,500	25,400	0.9	
BW65	25,460	25,340	20.0	
BN2	25,200	25,140	20.0	
BN20	24,760	24,660	0.9	
BR36	23,250	23,150	20.0	
BN19	23,140	23,040	0.9	
BW63	22,410	22,310	20.0	
BN8	22,310	22,210	0.9	
BN18	21,980	21,880	0.9	
BR5	21,690	21,590	20.0	
BN7	20,480	20,400	10.0	
BR43	20,040	19,960	20.0	Note 1
BW17	19,570	19,470	20.0	
BR4	19,170	19,070	10.0	
BR83	19,070	18,990	0.9	
BR82	18,990	18,910	0.9	
BW30	18,890	18,790	20.0	
BR9	17,000	16,920	20.0	
BW48	16,710	16,630	20.0	
BW47	16,180	16,100	20.0	
BN6	15,570	15,490	10.0	
BR81	15,530	15,450	0.9	
BR35	13,360	13,300	20.0	
BR3	13,250	13,190	10.0	
BW19	13,200	13,140	20.0	
BW62	12,770	12,710	20.0	
BR80	12,250	12,190	0.9	
BN5	12,190	12,130	10.0	
BW31	12,170	12,110	20.0	
BW43	12,040	11,980	20.0	
BR34	11,730	11,670	20.0	
BR37	11,400	11,350	20.0	
BW58	10,850	10,790	20.0	
BR15	10,802	10,750	20.0	
BR79	10,700	10,640	0.9	
BR12	10,150	10,090	20.0	
BW23	10,130	10,090	20.0	
BR42	10,024	9976	20.0	Note 1

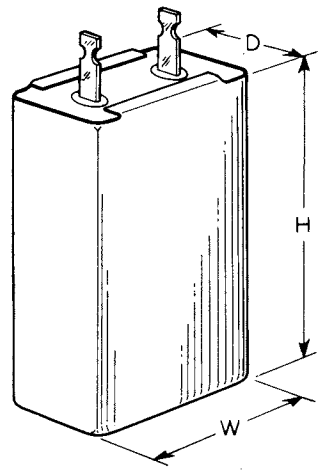

Code	Dimensions - Inches W	Dimensions - Inches D	Dimensions - Inches H
BG	1-3/16	1-1/32	1-7/16
BL	1-25/32	1-13/32	2-17/32
BN	1-25/32	1-1/32	2-17/32
BR, BW	1-25/32	1-1/32	2-1/32
BU	1-3/16	21/32	1-7/16

NOTES

1. Can is provided with ground terminal.
2. One terminal is grounded to can.

TCI Library www.telephonecollectors.info

TABLE 3.02

MICA, PRECISION POTTED SILVERED, B, 1 SECTION

Code	Capacitance - mmf Maximum	Capacitance - mmf Minimum	Freq kc	Remarks
BW64	9892	9858	20.0	
BR33	9787	9739	20.0	
BR17	9469	9427	20.0	
BR72	9300	9260	20.0	
BW20	8972	8952	20.0	
BW21	8444	8406	20.0	
BR48	8361	8323	20.0	
BR75	8233	8199	20.0	
BW60	7743	7709	20.0	
BW24	7280	7242	20.0	
BW33	7234	7200	20.0	
BR16	7158	7124	20.0	
BW56	6952	6920	20.0	
BW37	6954	6918	20.0	
BR19	6378	6348	20.0	
BR32	6207	6183	20.0	
BR49	6178	6150	20.0	
BW45	6132	6102	20.0	
BW15	6084	6056	20.0	
BR41	6016	5984	20.0	Note 1
BR14	5997	5969	20.0	
BR31	5995	5967	20.0	
BR30	5975	5947	20.0	Note 2
BR29	5952	5924	20.0	
BR55	5922	5894	20.0	
BN4	5916	5888	20.0	
BR76	5795	5768	20.0	
BR24	5542	5515	20.0	
BW34	5406	5380	20.0	
BR8	5323	5297	20.0	
BW38	5271	5241	20.0	
BW50	4945	4921	20.0	
BW35	4812	4788	20.0	
BR13	4786	4762	20.0	
BU18	4623	4601	20.0	
BR56	4579	4557	20.0	
BR26	4470	4448	20.0	
BR28	4421	4395	20.0	Note 2
BR62	4316	4294	20.0	
BR10	4265	4243	20.0	
BG47	4233	4213	20.0	
BG46	4129	4109	20.0	
BW61	4128	4108	20.0	
BR73	4083	4065	20.0	
BU13	3998	3974	20.0	
BW26	3931	3907	20.0	
BW51	3905	3885	20.0	
BG45	3709	3691	20.0	
BG44	3701	3683	20.0	
BR46	3683	3665	20.0	
BG18	3643	3627	20.0	
BU14	3551	3529	20.0	
BW29	3467	3449	20.0	
BR63	3458	3440	20.0	
BR74	3415	3399	20.0	
BG17	3386	3370	20.0	
BG43	3269	3251	20.0	Note 2
BR51	3255	3239	20.0	
BW27	3160	3140	20.0	
BR21	3111	3093	20.0	
BW18	3102	3084	20.0	
BR20	3076	3058	20.0	
BR40	3010	2990	20.0	Note 1
BR6	2847	2831	20.0	
BW57	2832	2816	20.0	
BW40	2717	2699	20.0	
BW28	2700	2682	20.0	
BG42	2667	2653	20.0	
BR52	2666	2652	20.0	
BG19	2622	2608	20.0	Note 1

Code	Capacitance - mmf Maximum	Capacitance - mmf Minimum	Freq kc	Remarks
BR71	2606	2594	20.0	
BG41	2541	2527	20.0	
BW59	2525	2511	20.0	
BG20	2438	2424	20.0	Note 1
BR23	2368	2354	20.0	
BR58	2320	2306	20.0	
BG40	2299	2285	20.0	
BW41	2264	2246	20.0	
BR53	2254	2242	20.0	
BG13	2126	2114	20.0	
BG25	2054	2038	10.0	Note 1
BG39	2035	2023	20.0	
BR39	2008	1992	20.0	Note 1
BG38	1980	1968	20.0	
BR59	1958	1946	20.0	
BW22	1947	1931	20.0	
BW53	1943	1931	20.0	
BW42	1897	1881	20.0	
BG26	1894	1878	10.0	Note 1
BG37	1802	1790	20.0	
BR69	1795	1785	20.0	
BW32	1768	1756	20.0	
BG36	1766	1754	20.0	
BR65	1698	1688	20.0	
BR27	1686	1674	20.0	
BW54	1663	1651	20.0	
BR60	1628	1618	20.0	
BR47	1625	1615	20.0	
BG74	1498	1493	20.0	
BR66	1468	1458	20.0	
BG75	1386	1381	20.0	
BG35	1378	1368	20.0	
BW55	1373	1363	20.0	
BW36	1369	1353	20.0	
BG72	1264	1254	10.0	
BR68	1205	1197	20.0	
BR54	1174	1166	20.0	
BR67	1132	1124	20.0	
BR70	1033	1027	20.0	
BR38	1006	994	20.0	Note 1
BW25	992	984	20.0	
BW49	990	982	20.0	
BG73	985	978	10.0	
BR25	960	952	20.0	
BG34	926	918	20.0	Note 2
BG71	904	896	10.0	
BR61	869.3	861.9	20.0	
BR18	843	835	20.0	
BG16	839	831	20.0	
BR50	828.7	821.5	20.0	
BG70	778	770	10.0	
BU17	706	694	20.0	
BW39	698	690	20.0	
BG69	667	661	10.0	
BG68	645	639	10.0	
BR57	599.1	592.7	20.0	
BG27	579	573	20.0	Note 1
BG67	574	568	10.0	
BG33	556	550	20.0	
BG28	555	549	20.0	Note 1
BU15	529	525	20.0	
BG66	507	501	10.0	
BW52	505	499	10.0	
BU16	505	495	20.0	
BG21	486	480	20.0	Note 1
BG65	477	471	10.0	
BG22	463	457	20.0	Note 1
BR64	444	438.2	20.0	
BG64	437	431	10.0	
BG76	408	405	20.0	

NOTES

1. Can is provided with ground terminal.
2. One terminal is grounded to can.

TCI Library www.telephonecollectors.info

MICA, PRECISION POTTED SILVERED, B, 1 SECTION

TABLE 3.02

Code	Capacitance - mmf		Freq	Remarks
	Maximum	Minimum	kc	
BG15	405	399	20.0	
BG63	395	389	10.0	
BG29	389	383	20.0	Note 1
BG77	385	382	20.0	
BG14	370	364	20.0	
BG23	369	363	20.0	Note 1
BG30	367	361	20.0	Note 1
BG62	363	357	10.0	
BG24	349	343	20.0	Note 1
BG61	340	334	10.0	
BR22	329	323	20.0	
BG78	315	312	20.0	
BG32	316	310	20.0	
BG60	314	308	10.0	
BG31	313	307	20.0	
BG79	299	296	20.0	
BG59	281	275	10.0	
BG58	253	247	10.0	
BG57	224	220	10.0	
BG56	206	202	10.0	
BG55	181	177	10.0	
BG54	171	167	10.0	
BG53	146	142	10.0	
BG52	138	134	10.0	
BG51	126	122	10.0	
BG50	115	111	10.0	
BG49	103	99	10.0	
BG48	93	89	10.0	

NOTES

1. Can is provided with ground terminal.
2. One terminal is gounded to can.

TCI Library www.telephonecollectors.info

TCI Library www.telephonecollectors.info

DATA SHEET **MICA, PRECISION POTTED SILVERED, B, 2-3 SECTIONS** **TABLE 3.03**

DESCRIPTION

Precision silvered mica capacitors potted in wax in aluminum cans. Hard rubber top held in place by formed metal lips. No mounting lugs.

Principal Application: Transmission equalizers, filters and networks.

Operating Temperature Range: 0° to 120° F.

Rated working voltages are 200 dc or 180 ac at frequencies of 60 cps or less.

Frequencies at which the capacitances are measured are given in the table.

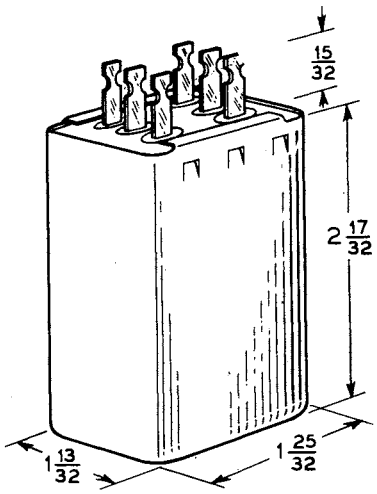

CAPACITANCES

Code	Terminals	Capacitance - mf Maximum	Capacitance - mf Minimum	Frequency kc	Remarks
BL5	1-2 3-4	0.031870 0.004281	0.031730 0.004259	20.0	Can is provided with ground terminal.
BL4	1-2 3-4 5-6	0.3880 0.03859 0.003878	0.3860 0.03821 0.003802	0.9	
BL6	1-2 3-4 5-6	0.036930 0.004932 0.001104	0.036770 0.004908 0.001096	20.0	

TCI Library www.telephonecollectors.info

TCI Library www.telephonecollectors.info

DESCRIPTION

Silvered mica units encased in a low loss molding material. Suitable for use under tropical humidity conditions.

Principal Applications: Transmission networks and filters.

Operating Temperature Range: -50° to +185°F.

Nominal value of capacitance must be specified in order. This value will be stamped on the capacitor.

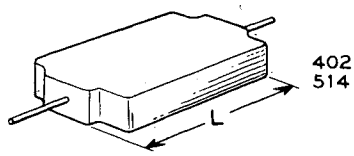

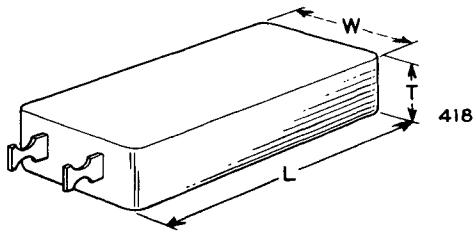

Code	Dimensions - Inches			Lead Length
	W	T	L	
402, 514	1-1/8	9/32	1-7/8	1-1/2
418	1-13/32	15/32	3-13/32	3/8

CAPACITANCES

Code	Range of Capacitance, mmf	Tolerance	Working Voltages			Remarks
			DC	AC*	Range, mmf	
418 B	500 to 40,000	±(0.5% + 1 mmf)	250	250	Entire	To stack with precision paper capacitors.
C		±(1% + 1 mmf)				
D		±(5% + 1 mmf)				
402 B	10 to 25,000	±(0.5% + 1 mmf)	250	250	Entire	
C		±(1% + 1 mmf)				
D		±(5% + 1 mmf)				
514 C	10 to 15,000	±(1% + 1 mmf)	300	300	Entire	

* At frequencies of 60 cps or less.

TCI Library www.telephonecollectors.info

TCI Library www.telephonecollectors.info

DESCRIPTION

Multi-unit silvered mica capacitors potted in wax in metal cans provided with lugs or studs.

Principal Application: Transmission filters and networks.

Operating Temperature Range: 0° to 120° F.

Rated working voltages are specified in the table below.

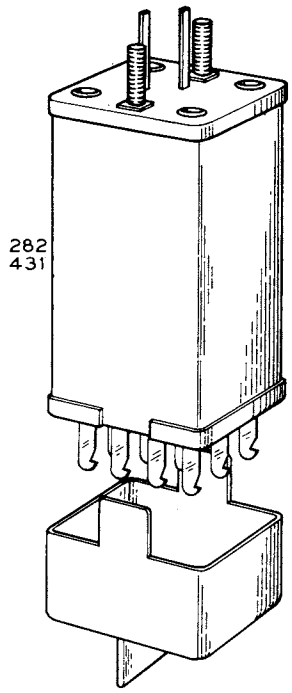

CAPACITANCES

Code	Capacitance - mmf Maximum	Capacitance - mmf Minimum	Voltages DC	Voltages AC*	Remarks
AK1	34,140 34,140	33,460 33,460	300	300	Two separate units
282B	1100 2200 4400 8800 11,000 16,500 22,000	900 1800 3600 7200 9000 13,500 18,500	200	200	Seven units with common terminal
282A	110 220 440 880 1650 3300 4400 22,000	90 180 360 720 1350 2700 3600 18,000	200	200	Eight units with common terminal
282C	110 220 440 880 1650 3300 4400 8800	90 180 360 720 1350 2700 3600 7200	200	200	Eight units with common terminal
AJ6	550 1100 2200 4400	450 900 1800 3600	200	200	Four units with common terminal
AJ1	695 2065 3780 1150	455 1685 3080 930	200	200	Four units with common terminal
AJ2	300 828 1490 504	200 676 1210 336	200	200	Four units with common terminal
AJ3	180 504 825 300	120 336 675 200	200	200	Four units with common terminal
431A	15 25 35 55 106 207 308 410	5 15 25 45 94 193 292 390	300	300	Eight units with common terminal

*At frequencies of 60 cps or less.

Code	Dimensions - Inches Width	Depth	Height	Mounting
282, 431	1-5/8	1-15/32	3-1/2	Stud
AJ, AK	1-25/32	1-13/32	2-17/32	Lug

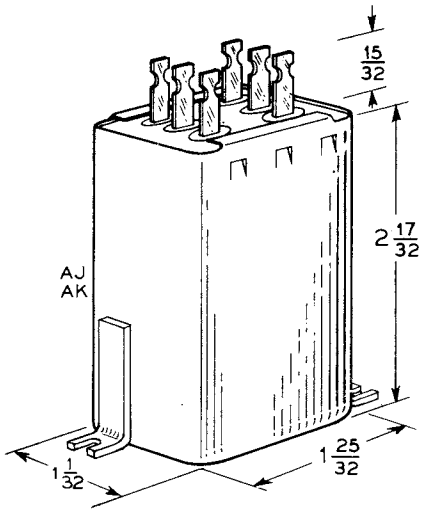

TCI Library www.telephonecollectors.info

TCI Library www.telephonecollectors.info

DESCRIPTION

Miscellaneous variable air capacitors. Listed primarily for identification.

Rated NON-PREFERRED because they are highly specialized, of limited application or are relatively expensive. Not recommended for general application.

CAPACITANCES

Code	Min Range, mmf		Dimensions - Inches			Test Voltage	Description
	Max	Min	Length	Width	Height		
376A	23 23	4 4	3-9/32	1-11/16	1-13/16	500ac	Two 357C variable air capacitors in rectangular metal can.
424A	About	200	4-25/32	4-3/4	4-3/4	500ac	Four sets of stator plates and one set of rotor. Rotor successively interleaves each set of stator plates. Two pairs of contact springs.
425A			5-5/16	2	2-1/2	1000ac	Two differential air capacitors mounted on metal base with shield between. Shafts insulated.
426A			6-3/8	4-11/16	4-11/16	500ac See Spec	Differential air capacitors. 8 separate stators and 2 rotors.
427A	55	2.25	4-25/32	3-3/4	3-1/4	1000ac	Two sets of stator plates, one set rotor. Stator plates interleaved and alternately connected to stator terminals.
436A	500 ±25		5-23/32	3-9/16	2-27/32	500ac	Two sets stator, two sets rotor plates. Interleave simultaneously. Switch.
436B	500 ±25		5-23/32	3-9/16	2-27/32	500ac	Same as 436A, but no switch.
451A	820	60	7-5/8	4-15/16	6-7/8	500ac	Precision capacitor. Main tuning unit in 17B oscillator. Linear frequency scale.
459A	74	30	7-27/32	4-13/16	6-7/8	500ac	Precision capacitor. Main tuning unit in 25A oscillator. Linear frequency scale.
466A	8		2-9/16	2-5/16	2-1/8	500ac	One rotor plate, two stator. Straight line frequency.
467A	Nominal	100	2-1/8	1-11/16	1-11/16	500ac	Adjustable to work with associated apparatus by 2 special stator plates.
467B	Nominal	70	2-1/8	1-11/16	1-11/16	500ac	Adjustable to work with associated apparatus by 2 special stator plates.
471A	46 46	5 5	3-5/8	1-3/8	1-1/2	500ac	Two sets stator, two sets rotor plates, shielded between. Shafts insulated.
504A	42	6	1-25/32	1-13/32	2-17/32	500ac	One 357 variable air capacitor in rectangular aluminum can.

TCI Library www.telephonecollectors.info

DATA SHEET **VARIABLE, TRIMMERS, AIR, TUBULAR GLASS** **TABLE 4.02**

DESCRIPTION

Variable air capacitors, trimmer type.
Test voltages are specified in the table below.

CAPACITANCES

Code	Min Range, mmf Max	Min	Terms*	Test Voltage	Remarks
432A	325	13.0		500ac	
432B	200	10.0		500ac	
357J	135	9.0	R,L	500ac	
432C	100	7.0		500ac	
393H	99	7.5		500ac	***
357H	99	7.5	R,L	500ac	
357G	75	6.0	R,L	500ac	
357K	75	6.0	R,L	500ac	
393D	42	5.0		500ac	***
357D	42	5.0	R,L	500ac	
357B	31	4.5	R,L	500ac	
357L	31	4.5	R	500ac	
357M	31	4.5	L	500ac	
393B	31	4.5		500ac	***
393C	23	4.0		500ac	***
357C	23	4.0	R,L	500ac	
393A	17	4.0		500ac	***
357A	17	4.0	R,L	500ac	
493A	10.5	0.8		500ac	Glass
357F	9.0	3.5	R,L	500ac	
399A	5.5	2.4		500ac	
493B	5.25	0.3		500ac	Glass **
492A	4.0	0.5		500dc	Glass
396A	2.5	0.5		500dc	Glass
395A	2.5	0.5		500dc	Glass
492B	2.0	0.5		500dc	Glass

* Terminals are as indicated, on the rotor side, viewed from that side.
** Similar to GA-51457
*** Terminals on both sides of base.

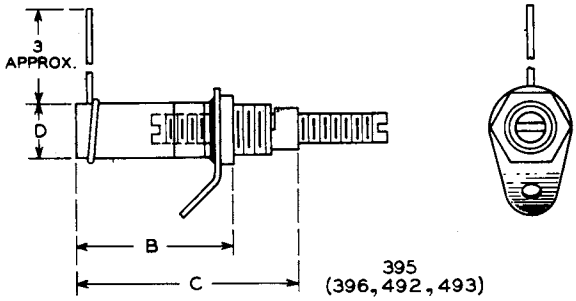

APPROXIMATE DIMENSIONS

Code	B	C	D	Dia Mtg Hole
395	7/8	1-5/16	5/16	0.277
396	7/8	1-5/16	5/16	0.277
492A	29/32	1-7/32	5/32	0.180
492B	5/8	15/16	5/32	0.180
493A	1-1/16	1-1/2	3/8	0.257
493B	13/16	1-1/4	3/8	0.257

Codes		A
357A	393A	7/8
357B, L, M	393B	1
357C	393C	15/16
357D	393D	1-1/32
357F		25/32
357G, K		1-21/64
357H	393H	1-17/32
357J		1-13/16
399A		21/32

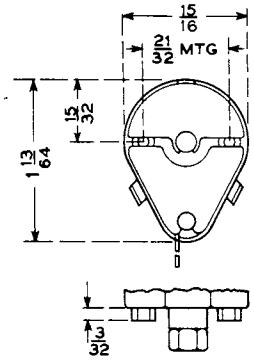

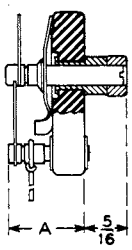

399

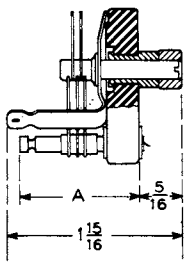

357

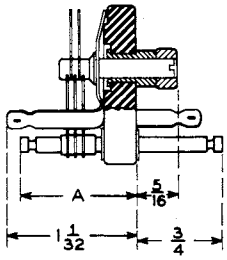

393

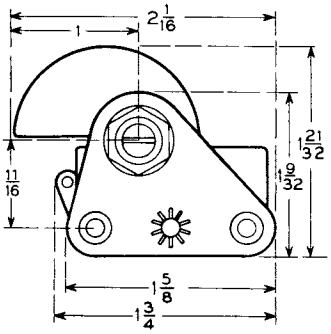

432

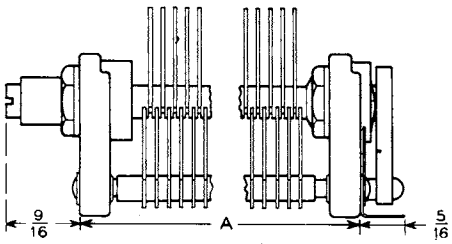

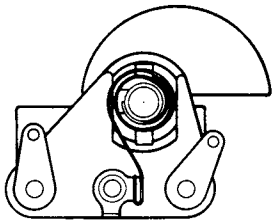

Code	A
432A	2-15/16
432B	2-5/32
432C	1-9/16

TCI Library www.telephonecollectors.info

TCI Library www.telephonecollectors.info

DESCRIPTION

Differential variable air capacitors
Principal Applications: Filters and Networks.
Test Voltage: 500ac.

APPROXIMATE DIMENSIONS

Code	A	B
394A	7/8	1-5/16
428	1-1/8	1-7/16
430	29/32	1-5/16
435	7/8	1-5/16

CAPACITANCES

Code	Min Range, mmf Max	Min
394B	75 75	6.0 6.0
428A	42 42	5.0 5.0
435A	17 17	4.0 4.0
394A	4.4 4.0	2.5 2.0
430A	4.2 3.7	2.5 2.0

The 435 type has terminals on both sides of base, others on rotor side only.

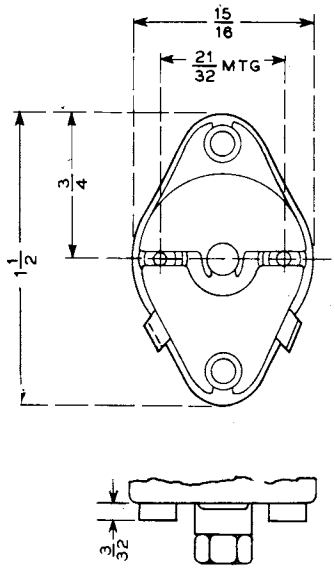

394A
428
430
435

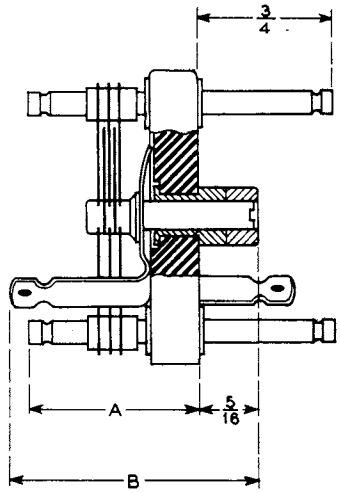

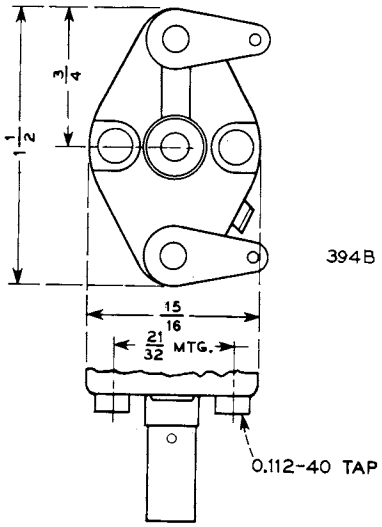

394B

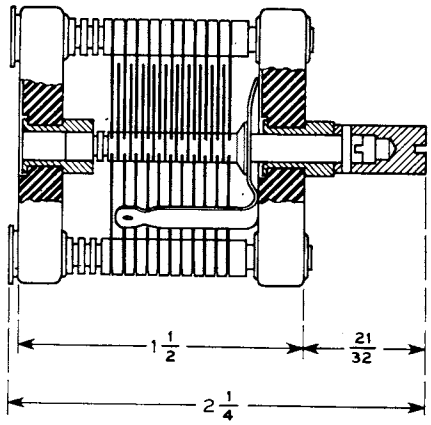

TCI Library www.telephonecollectors.info

TCI Library www.telephonecollectors.info

DESCRIPTION

Contact protection networks. One or two capacitors connected in series with resistors.

177, 178 and 179 types are assembled in aluminum cans. 180 type is cast in plastic. 185 and 186 types consist of a resistor mounted inside a tubular capacitor.

Operating voltage and temperatures are specified in the table.

CAPACITANCES

Code	Capacitance Range mf Max	Capacitance Range mf Min	Resistance Ohms ±10%	Rating - Volts Continuous DC	Rating - Volts Pulse Peak*	Max Opr Temp °F	Figs
177J	1.25	1.00	100	200	300	120	1,5
177A	1.25	1.00	150	200	300	120	1,5
179A	1.25	1.00	150	200	300	120	2,5
178A	1.25 1.25	1.00 1.00	150 -	200	300	120	2,7
177D	1.25	1.00	560	200	300	120	1,5
177K	0.625 0.625	0.500 0.500	100 100	200	300	120	1,6
177H	0.625 0.625	0.500 0.500	150 150	200	300	120	1,6
177E	0.625	0.500	150	200	300	120	1,5
177C	0.625 0.625	0.500 0.500	470 470	200	300	120	1,6
177F	0.625	0.500	1000	200	300	120	1,5
186A	0.4	0.3	120	-	350	150	4,5
180A	0.4	0.3	150	-	350	150	3,5
177G	0.32	0.25	560	200	300	120	1,5
185A	0.15	0.11	470	-	350	150	4,5
177B	0.135	0.100	150	200	300	120	1,5
179B	0.135	0.100	150	200	300	120	2,5

*Pulse repetition rate should not exceed 50 pulses per second.

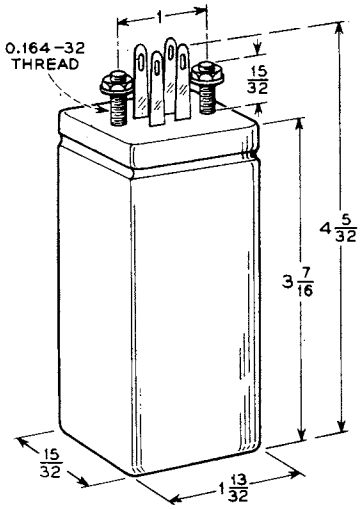

FIG. 1

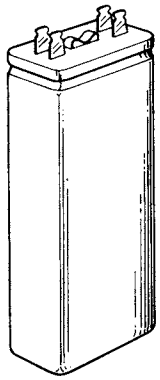

FIG. 2

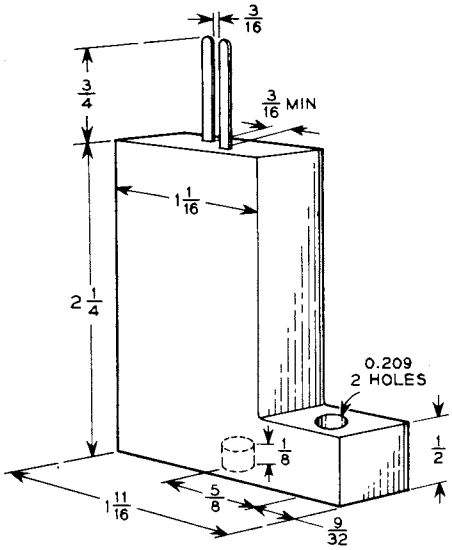

FIG. 3

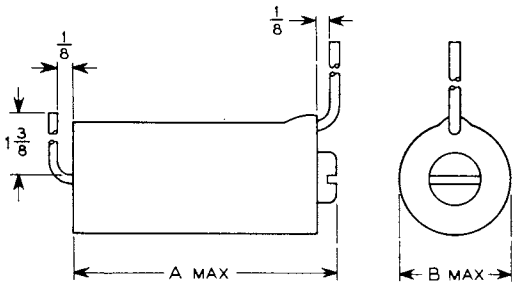

FIG. 4

Code	A	B
185	1-3/8	7/16
186	1-7/8	17/32

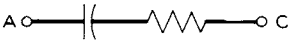

FIG. 5

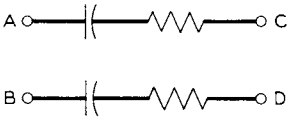

FIG. 6

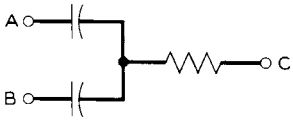

FIG. 7

Code	Width	Depth	Height
178	1-13/32	25/32	3-7/16
179	1-13/32	15/32	3-7/16

TCI Library www.telephonecollectors.info

TCI Library www.telephonecollectors.info

DESCRIPTION

Miscellaneous rectangular paper capacitors for application on dc voltages. Hermetically sealed, liquid impregnated and filled, except as noted. Some are stud mounted, others are provided with spade lug or footed brackets.

Principal Application: Power supply filters.

Operating temperature ranges are specified in the accompanying chart.

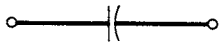

FIG.1

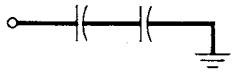

FIG.2

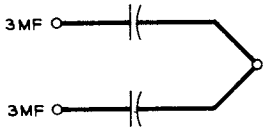

FIG.3

CAPACITANCES

Spec	Cap mf	Tol %	Recommended Max DC Wkg Volts	Temp Range °C	Mtg	Charac-teristic	Fig	Dimensions - Inches Width	Depth	Height	Remarks
KS-13967	50.0	±10	100	-55 +85	FB	F	1	3-3/4	3-3/16	5-1/2	Has ground lug. Vitamin Q.
KS-13889	10.0	±10	4000	-55 +65	FB	F	1	13-1/2	5-1/8	12-7/8	
KS-13499	5.0	±10	5000	-55 +85	-	F	1	13-1/2	5-1/8	12-7/8	
KS-14433	5.0	±10	2400	-55 +65	FB	F	1	4-9/16	3-3/4	6-1/2	
KS-14071	4.0	±15	5000	-55 +85	SLB	-	1	8-1/8	4-5/8	7-1/2	
KS-14072	4.0	+20 -10	1000	-55 +85	SLB	E	1	2-1/2	1-3/16	5-1/4	
KS-13888	4.0	±10	50	-55 +85	SLB	E	1	1-3/16	1-1/16	2-1/4	
KS-14326	2.0	+20 -10	600	-55 +85	SLB	E	1	1-13/16	1-1/16	3-1/4	
KS-14325	1.0	+20 -10	1000	-55 +85	SLB	E	1	1-13/16	1-1/16	2-3/4	
KS-14358	0.10	±10	3000	-55 +85	-	E	1	2-1/2	1-3/16	2-7/8	For military application.

SLB - Spade lug brackets FB - Footed brackets Stud - Stud mounted

TCI Library www.telephonecollectors.info

TCI Library www.telephonecollectors.info

DESCRIPTION

Large rectangular style paper capacitors, impregnated and filled with chlorinated diphenyl, of a limited number of the physical sizes of the CP70 type, characteristic F, of specification MIL-C-25A.

Furnished with two detachable brackets each, either of the footed or spade lug types.

Intended primarily for use on dc voltage as blocking, filter and by-pass capacitors in Bell System and non-government applications where long life and high reliability are essential. For this reason it is recommended that the normal dc operating voltage should not exceed 50 percent of the manufacturer's rating shown on the drawings of the specification. Values of the "Recommended Maximum DC Working Voltages" are shown below.

Operating Temperature Range: -55° to +85°C.

Suitable for use under tropical humidity conditions.

CAPACITANCES

KS	List	Cap mf	Tol %	Recommended Max DC Wkg Volts
13552	3	12.0	±10	750
13552	4	12.0	+20 -10	750
13557	1	12.0	+20 -10	500
13553	1	10.0	±10	1000
13553	2	10.0	+20 -10	1000
13552	1	10.0	±10	750
13552	2	10.0	+20 -10	750
13551	1	10.0	±10	500
13551	2	10.0	+20 -10	500
13550	1	10.0	±10	300
13550	2	10.0	+20 -10	300
13554	1	8.0	±10	500
13554	2	8.0	+20 -10	500
13551	3	6.0	±10	750
13551	4	6.0	+20 -10	750
13550	3	6.0	±10	500
13550	4	6.0	+20 -10	500
13558	1	4.0	±10	2000
13553	3	4.0	±10	1500
13553	4	4.0	+20 -10	1500
13550	5	4.0	±10	750
13550	6	4.0	+20 -10	750
13549	1	4.0	±10	300
13549	2	4.0	+20 -10	300
13548	1	2.0	±10	500
13548	2	2.0	+20 -10	500
13548	3	1.0	±10	750
13548	4	1.0	+20 -10	750
13547	9	1.0	±10	500
13547	10	1.0	+20 -10	500
13547	3	1.0	±10	300
13547	4	1.0	+20 -10	300
13556	1	0.5	+20 -10	1500
13555	1	0.5	+20 -10	750
13547	7	0.5	±10	500
13547	8	0.5	+20 -10	500
13547	1	0.5	±10	300
13547	2	0.5	+20 -10	300
13547	13	0.25	±10	750
13547	14	0.25	+20 -10	750
13547	5	0.25	±10	500
13547	6	0.25	+20 -10	500
13547	11	0.1	±10	750
13547	12	0.1	+20 -10	750

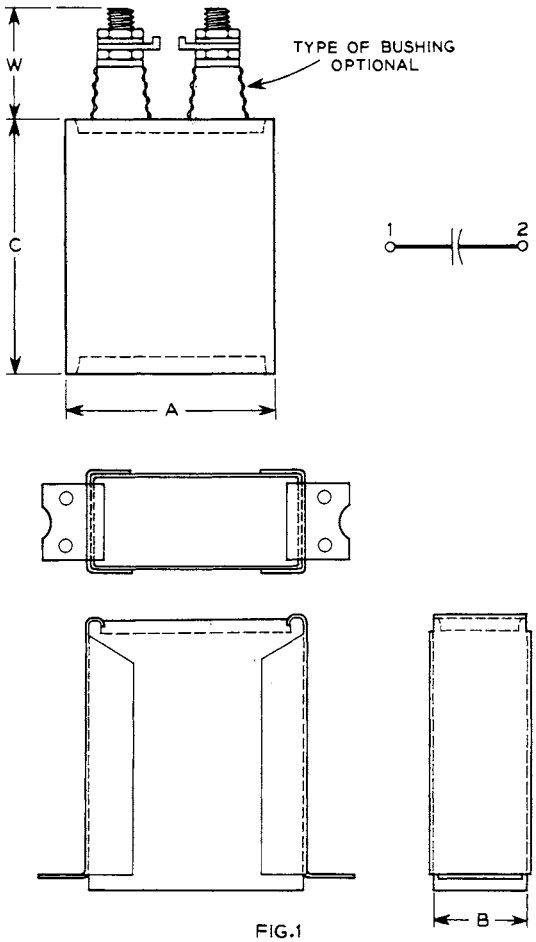

FIG.1

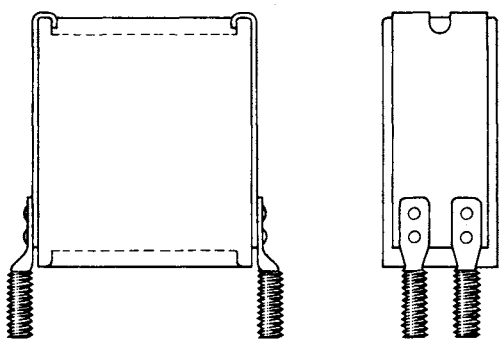

FIG.2

KS	Fig	A	B	C	W
13547	1	1-13/16	1-1/16	2-1/4	1-3/8
13548	1	1-13/16	1-1/16	3-7/8	1-3/8
13549	1	2-1/2	1-3/16	3-1/2	1-3/8
13550	1	3-3/4	1-1/4	4-3/4	1-3/8
13551	1	3-3/4	1-3/4	4-3/4	1-3/8
13552	1	3-3/4	3-3/16	4-3/4	1-3/8
13553	1	4-9/16	3-3/4	4-3/4	1-3/4
13554	2	3-3/4	1-3/4	3-7/8	1-3/8
13555	1	1-13/16	1-1/16	2-7/8	1-3/8
13556	1	2-1/2	1-3/16	4-1/4	1-3/4
13557	2	3-3/4	2-1/4	4-1/2	1-3/8
13558	1	4-9/16	3-3/4	8-1/2	2-3/4

TCI Library www.telephonecollectors.info

TCI Library www.telephonecollectors.info

DESCRIPTION

Hermetically sealed, liquid impregnated and filled, paper capacitors, for use on AC potentials. Maximum recommended working ac voltages and the maximum working frequencies are specified below.

As indicated, they are furnished with clamp, footed or spade lug brackets.

Principal Applications: Power harmonic suppression filters, blocking capacitors and voltage regulator capacitors.

CAPACITANCES

Spec	Cap mf	Tol %	Working AC Volts	Working Freq Cps	Temp Range °C	Dim Fig	Sch Fig	Dimensions - Inches Width	Depth	Height	Mtg	Remarks
KS-14179	10.0	±10	500	180	0 +65	-	5	3-3/4	3-3/16	4-1/8	SLB	Bell System use only
KS-14536	10.0	±10	330	180	0 +65	-	5	3-3/4	1-3/4	4-3/4	FB	Bell System use only
KS-14258	6.0	±10	600	100	0 +65	-	5	3-3/4	1-3/4	4-3/4	SLB	Bell System use only
KS-13982	5.0	±10	600	100	0 +65	-	5	3-3/4	1-3/4	4-1/4	SLB	Bell System use only
KS-13074	2.0	-10 +20	115	2800	-55 +50	2	5	2	2	1-1/8	-	Suitable for Military Use
KS-13075	0.5, 0.5	±10	115	2800	-55 +70	3	6	2	1-3/4	7/8	-	Suitable for Military Use
KS-13189	0.25, 0.25	±20	115	2800	-55 +85	4	6	1-13/16	1-1/4	3/4	-	Suitable for Military Use
KS-13157	0.15	±10	350	100	-55 +85	1	5	A=	1		-	Suitable for Military Use

CB - Clamp Bracket
FB - Footed brackets
S - Stud mounted
SLB - Spade lug brackets

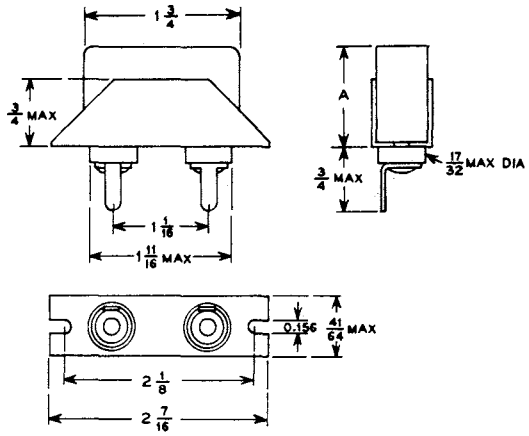

FIG.1

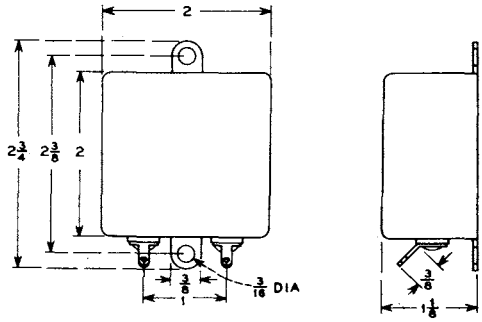

FIG.2

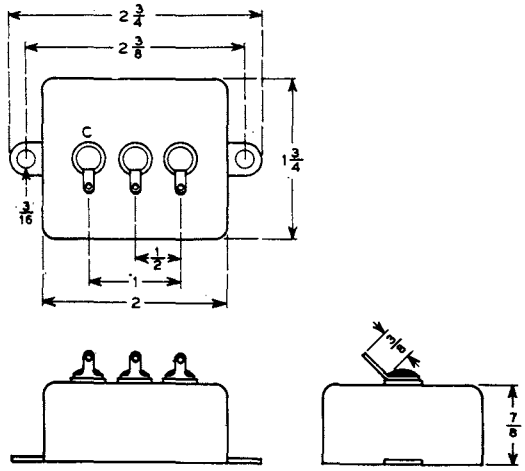

FIG.3

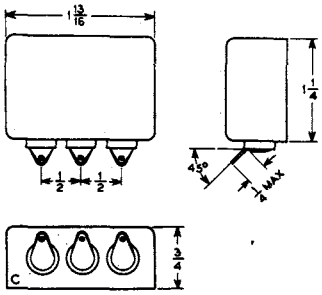

FIG.4

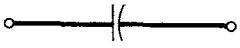

FIG.5

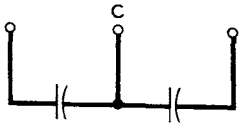

FIG.6

TCI Library www.telephonecollectors.info

TCI Library www.telephonecollectors.info

DESCRIPTION

Tubular style, mineral oil impregnated and filled paper capacitors, of the same physical size as the CP41 type, Characteristic E, of specification MIL-C-25A.

Intended primarily for use on dc potentials as blocking, filter and by-pass capacitors in Bell System and non-Government equipments where long life and high reliability are essential. For this reason it is recommended that the normal dc operating voltage should not exceed 50 percent of the manufacturer's rating shown on the drawings of the specification. Values of the "Recommended Maximum DC Working Voltages" are shown below.

Operating Temperature Range: -55° to +85°C.

Suitable for use under tropical humidity conditions.

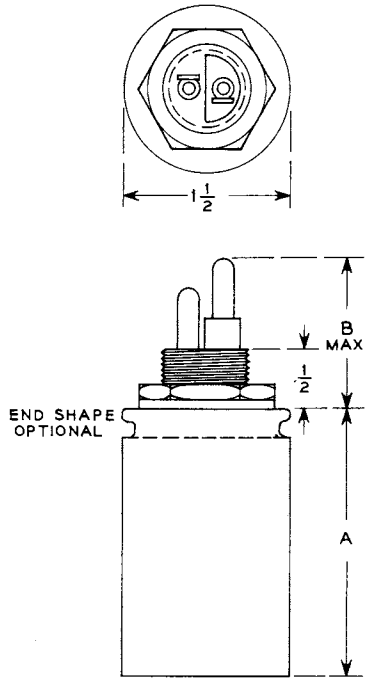

CAPACITANCES

KS	List	Cap mf	Tol %	Recommended Max DC Wkg Volts
13619	1	1.0	±10	750
13619	2	1.0	+20 -10	750
13617	1	0.50	±10	750
13617	2	0.50	+20 -10	750
13616	3	0.25	±10	750
13616	4	0.25	+20 -10	750
13620	3	2.0	±10	500
13620	4	2.0	+20 -10	500
13618	3	1.0	±10	500
13618	4	1.0	+20 -10	500
13620	1	4.0	±10	300
13620	2	4.0	+20 -10	300
13618	1	2.0	±10	300
13618	2	2.0	+20 -10	300
13618	5	2.0	+20 -10	300
13616	1	1.0	±10	300
13616	2	1.0	+20 -10	300

KS	List Nos	A	Max B
13616	1, 2, 3, 4	2-3/8	1-1/2
13617	1, 2	2-7/8	1-1/2
13618	1, 2, 3, 4	3-3/8	1-1/2
13618	5	3-3/8	1-1/2
13619	1, 2	4-1/2	1-1/2
13620	1, 2, 3, 4	5-1/4	1-1/2

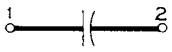

TCI Library www.telephonecollectors.info

TCI Library www.telephonecollectors.info

DESCRIPTION

Bath tub style, mineral oil impregnated and filled paper capacitors of the same physical sizes as the CP55 type, Characteristic E, of specification MIL-C-25A.

Intended primarily for use on dc voltages as blocking, filter and by-pass capacitors in Bell System and non-Government applications where long life and high reliability are essential. For this reason it is recommended that the normal dc operating voltages should not exceed 50 percent of the manufacturer's rating shown on the drawings of the specification. Values of the "Maximum Recommended DC Working Voltages" are shown below.

Operating Temperature Range: -55° to +85°C.

Suitable for use under tropical humidity conditions.

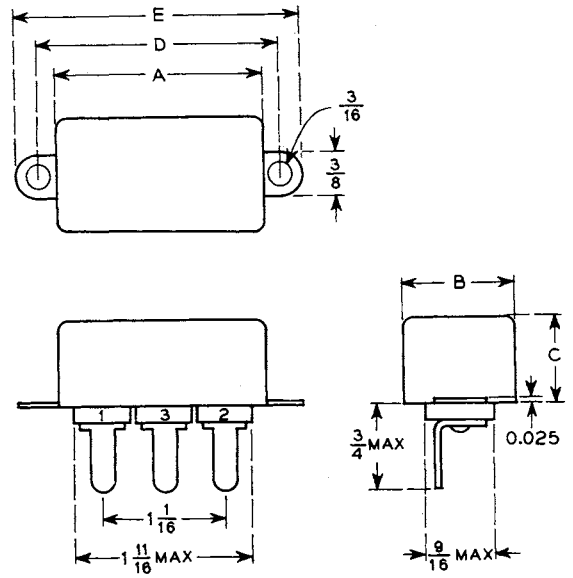

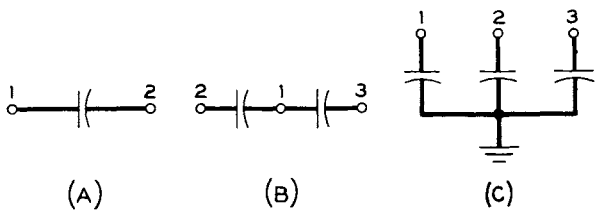

Circuit diagram "A" uses terminals 1 and 2, and terminal 3 is omitted. For diagram "B", terminal 1 is the common terminal and is marked C.

CAPACITANCES

MAXIMUM RECOMMENDED DC WORKING VOLTAGE = 500

KS	List	Cap mf	Tol %	Fig
13668	3	1.0	±10	A
13668	4	1.0	+20 -10	A
13664	7	0.5	±10	A
13664	8	0.5	+20 -10	A
13662	7	0.25	±10	A
13662	8	0.25	+20 -10	A
13661	9	0.1	±10	A
13661	10	0.1	+20 -10	A
13661	7	0.05	±10	A
13661	8	0.05	+20 -10	A
13668	7	2x0.5	±15	B
13668	8	2x0.5	+20 -10	B
13664	9	2x0.25	±15	B
13664	10	2x0.25	+20 -10	B
13662	9	2x0.1	±15	B
13662	10	2x0.1	+20 -10	B
13661	15	2x0.05	±15	B
13661	16	2x0.05	+20 -10	B
13668	11	3x0.25	±20	C
13668	12	3x0.25	+20 -10	C
13664	13	3x0.1	±20	C
13664	14	3x0.1	+20 -10	C
13661	19	3x0.05	±20	C
13661	20	3x0.05	+20 -10	C

KS	A	B	C	D	E
13661	1-13/16	1	3/4	2-1/8	2-1/2
13662	1-13/16	1	7/8	2-1/8	2-1/2
13663	1-13/16	1	1	2-1/8	2-1/2
13664	2	1-3/4	7/8	2-3/8	2-3/4
13665	2	1-3/4	1	2-3/8	2-3/4
13666	2	2	1	2-3/8	2-3/4
13667	2	2	1-1/8	2-3/8	2-3/4
13668	2	2	1-1/4	2-3/8	2-3/4

TCI Library www.telephonecollectors.info

PAPER, BATHTUB, 1-3 SECTIONS

MAXIMUM RECOMMENDED DC WORKING VOLTAGE = 300

KS	List	Cap mf	Tol %	Fig
13668	1	2.0	±10	A
13668	2	2.0	+20 -10	A
13665	1	1.0	±10	A
13665	2	1.0	+20 -10	A
13663	1	0.5	±10	A
13663	2	0.5	+20 -10	A
13661	5	0.25	±10	A
13661	6	0.25	+20 -10	A
13661	3	0.1	±10	A
13661	4	0.1	+20 -10	A
13661	1	0.05	±10	A
13661	2	0.05	+20 -10	A
13668	5	2x1.0	±15	A
13668	6	2x1.0	+20 -10	A
13665	3	2x0.5	±15	B
13665	4	2x0.5	+20 -10	B
13663	3	2x0.25	±15	B
13663	4	2x0.25	+20 -10	B
13661	13	2x0.1	±15	B
13661	14	2x0.1	+20 -10	B
13661	11	2x0.05	±15	B
13661	12	2x0.05	+20 -10	B
13668	9	3x0.5	±20	C
13668	10	3x0.5	+20 -10	C
13664	11	3x0.25	±20	C
13664	12	3x0.25	+20 -10	C
13662	11	3x0.1	±20	C
13662	12	3x0.1	+20 -10	C
13661	17	3x0.05	+20	C
13661	18	3x0.05	+20 -10	C

MAXIMUM RECOMMENDED DC WORKING VOLTAGE = 50

KS	List	Cap mf	Tol %	Fig
13667	1	4.0	±10	A
13667	2	4.0	+20 -10	A
13664	1	2.0	±10	A
13664	2	2.0	+20 -10	A
13662	1	1.0	±10	A
13662	2	1.0	+20 -10	A

MAXIMUM RECOMMENDED DC WORKING VOLTAGE = 200

KS	List	Cap mf	Tol %	Fig
13664	5	1.0	±10	A
13664	6	1.0	+20 -10	A
13662	5	0.5	±10	A
13662	6	0.5	+20 -10	A
13667	3	3x0.5	±20	C
13667	4	3x0.5	+20 -10	C

MAXIMUM RECOMMENDED DC WORKING VOLTAGE = 100

KS	List	Cap mf	Tol %	Fig
13666	1	2.0	±10	A
13666	2	2.0	+20 -10	A
13664	3	1.0	±10	A
13664	4	1.0	+20 -10	A
13662	3	0.5	±10	A
13662	4	0.5	+20 -10	A

TCI Library www.telephonecollectors.info

DESCRIPTION

Bath tub style paper capacitors, impregnated and filled with either mineral oil (Characteristic E) or chlorinated diphenyl (Characteristic F), of the same physical sizes as CP53 and CP54 of specification MIL-C-25A.

Intended primarily for use on dc potentials as blocking, filter and by-pass capacitors in Bell System and non-Government applications where long life and high reliability are essential. For this reason it is recommended that the normal dc operating voltage should not exceed 50 percent of the manufacturer's rating shown on the drawings of the specification. Values of the "Maximum Recommended DC Working Voltages" are shown below.

Operating Temperature Range: -55° to +85°C.

Suitable for use under tropical humidity conditions.

Only those characteristic F capacitors are included which offer a size advantage over the E characteristic capacitors of the same rating.

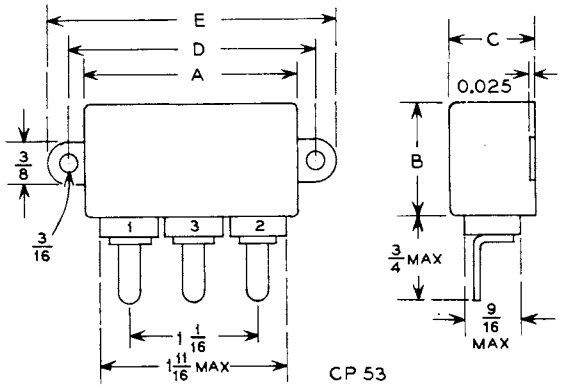

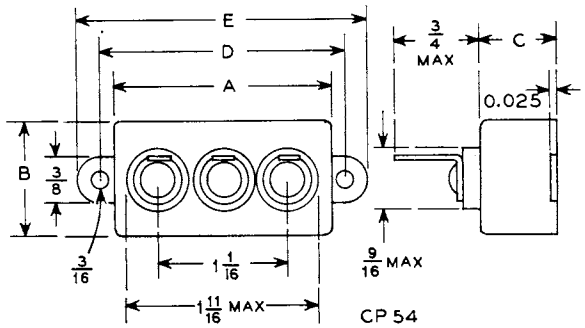

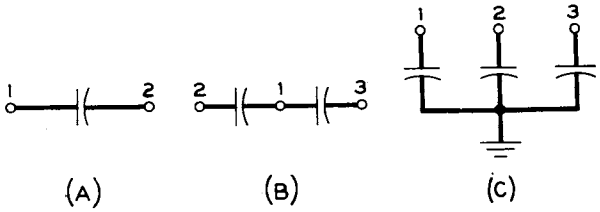

Circuit diagram "A" uses terminals 1 and 2, and terminal 3 is omitted. For diagram "B", terminal 1 is the common terminal and is marked C.

CAPACITANCES

Maximum Recommended DC Working Voltage = 500

KS	List	Cap mf	Tol %	Fig	Characteristic
13376	5	1.0	±10	A	E
13376	6	1.0	+20 -10	A	E
13384	3	1.0	±10	A	E
13384	4	1.0	+20 -10	A	E
13373, 13380	7	0.5	±10	A	E
13373, 13380	8	0.5	+20 -10	A	E
13371, 13378	7	0.25	±10	A	E
13371, 13378	8	0.25	+20 -10	A	E
13458, 13462	5	0.25	±10	A	F
13458, 13462	6	0.25	+20 -10	A	F
13370, 13377	9	0.1	±10	A	E
13370, 13377	10	0.1	+20 -10	A	E
13370, 13377	7	0.05	±10	A	E
13370, 13377	8	0.05	+20 -10	A	E
13376	9	2x0.5	±15	B	E
13376	10	2x0.5	+20 -10	B	E
13384	7	2x0.5	±15	B	E
13384	8	2x0.5	+20 -10	B	E
13373, 13380	9	2x0.25	±15	B	E
13373, 13380	10	2x0.25	+20 -10	B	E
13371, 13378	9	2x0.1	±15	B	E
13371, 13378	10	2x0.1	+20 -10	B	E
13458, 13462	7	2x0.1	±15	B	F
13458, 13462	8	2x0.1	+20 -10	B	F
13370, 13377	15	2x0.05	±15	B	E
13370, 13377	16	2x0.05	+20 -10	B	E
13376	15	3x0.25	±20	C	E
13376	16	3x0.25	+20 -10	C	E
13384	11	3x0.25	±20	C	E
13384	12	3x0.25	+20 -10	C	E
13373, 13380	13	3x0.1	±20	C	E
13373, 13380	14	3x0.1	+20 -10	C	E
13370, 13377	19	3x0.05	±20	C	E
13370, 13377	20	3x0.05	+20 -10	C	E

CP53	CP54
KS-13370 to 13376	KS-13377 to 13384
KS-13458 to 13461	KS-13462 to 13465

KS	A	B	C	D	E
13370, 13377 13458, 13462	1-13/16	1	3/4	2-1/8	2-1/2
13371, 13378 13459, 13463	1-13/16	1	7/8	2-1/8	2-1/2
13372, 13379	1-13/16	1	1	2-1/8	2-1/2
13373, 13380 13460, 13464	2	1-3/4	7/8	2-3/8	2-3/4
13374, 13381	2	1-3/4	1	2-3/8	2-3/4
13375, 13382 13461, 13465	2	2	1	2-3/8	2-3/4
13376, 13383	2	2	1-1/8	2-3/8	2-3/4
13384	2	2	1-1/4	2-3/8	2-3/4

TCI Library www.telephonecollectors.info

TABLE 11.07

PAPER, BATHTUB, 1-3 SECTIONS

MAXIMUM RECOMMENDED DC WORKING VOLTAGE = 300

KS	List	Cap mf	Tol %	Fig.	Charac-teristic
13376	3	2.0	±10	A	E
13376	4	2.0	+20 -10	A	E
13384	1	2.0	±10	A	E
13384	2	2.0	+20 -10	A	E
13374, 13381	1	1.0	±10	A	E
13374, 13381	2	1.0	+20 -10	A	E
13460, 13464	1	1.0	±10	A	F
13460, 13464	2	1.0	+20 -10	A	F
13372, 13379	1	0.5	±10	A	E
13372, 13379	2	0.5	+20 -10	A	E
13459, 13463	1	0.5	±10	A	F
13459, 13463	2	0.5	+20 -10	A	F
13370, 13377	5	0.25	±10	A	E
13370, 13377	6	0.25	+20 -10	A	E
13370, 13377	3	0.1	±10	A	E
13370, 13377	4	0.1	+20 -10	A	E
13370, 13377	1	0.05	±10	A	E
13370, 13377	2	0.05	+20 -10	A	E
13376	7	2x1.0	±15	B	E
13376	8	2x1.0	+20 -10	B	E
13384	5	2x1.0	±15	B	E
13384	6	2x1.0	+20 -10	B	E
13374, 13381	3	2x0.5	±15	B	E
13374, 13381	4	2x0.5	+20 -10	B	E
13460, 13464	3	2x0.5	±15	B	F
13460, 13464	4	2x0.5	+20 -10	B	F
13372, 13379	3	2x0.25	±15	B	E
13372, 13379	4	2x0.25	+20 -10	B	E
13459, 13463	3	2x0.25	±15	B	F
13459, 13463	4	2x0.25	+20 -10	B	F
13370, 13377	13	2x0.10	±15	B	E
13370, 13377	14	2x0.10	+20 -10	B	E
13370, 13377	11	2x0.05	±15	B	E
13370, 13377	12	2x0.05	+20 -10	B	E
13376	13	3x0.5	±20	C	E
13376	14	3x0.5	+20 -10	C	E
13384	9	3x0.5	±20	C	E
13384	10	3x0.5	+20 -10	C	E
13373, 13380	11	3x0.25	±20	C	E
13373, 13380	12	3x0.25	+20 -10	C	E
13371, 13378	11	3x0.1	±20	C	E
13371, 13378	12	3x0.1	+20 -10	C	E
13458, 13462	9	3x0.1	±20	C	F
13458, 13462	10	3x0.1	+20 -10	C	F
13370, 13377	17	3x0.05	±20	C	E
13370, 13377	18	3x0.05	+20 -10	C	E

MAXIMUM RECOMMENDED DC WORKING VOLTAGE = 200

KS	List	Cap mf	Tol %	Fig	Charac-teristic
13373, 13380	5	1.0	±10	A	E
13373, 13380	6	1.0	+20 -10	A	E
13371, 13378	5	0.5	±10	A	E
13371, 13378	6	0.5	+20 -10	A	E
13376	11	3x0.5	±20	C	E
13376	12	3x0.5	+20 -10	C	E
13383	3	3x0.5	±20	C	E
13383	4	3x0.5	+20 -10	C	E
13461, 13465	3	3x0.5	±20	C	F
13461, 13465	4	3x0.5	+20 -10	C	F

MAXIMUM RECOMMENDED DC WORKING VOLTAGE = 100

KS	List	Cap mf	Tol %	Fig	Charac-teristic
13375, 13382	1	2.0	±10	A	E
13375, 13382	2	2.0	+20 -10	A	E
13373, 13380	3	1.0	±10	A	E
13373, 13380	4	1.0	+20 -10	A	E
13371, 13378	3	0.5	±10	A	E
13371, 13378	4	0.5	+20 -10	A	E
13458, 13462	3	0.5	±10	A	F
13458, 13462	4	0.5	+20 -10	A	F

MAXIMUM RECOMMENDED DC WORKING VOLTAGE = 50

KS	List	Cap mf	Tol %	Fig	Charac-teristic
13376	1	4.0	±10	A	E
13376	2	4.0	+20 -10	A	E
13383	1	4.0	±10	A	E
13383	2	4.0	+20 -10	A	E
13461, 13465	1	4.0	±10	A	F
13461, 13465	2	4.0	+20 -10	A	F
13373, 13380	1	2.0	±10	A	E
13373, 13380	2	2.0	+20 -10	A	E
13371, 13378	1	1.0	±10	A	E
13371, 13378	2	1.0	+20 -10	A	E
13458, 13462	1	1.0	±10	A	F
13458, 13462	2	1.0	+20 -10	A	F

TCI Library www.telephonecollectors.info

DATA SHEET **PAPER, TUBULAR, SUBMINIATURE**

DESCRIPTION

Hermetically sealed, liquid impregnated, tubular paper capacitors.

Principal Application: Electronic chassis.

KS-types are for Bell System applications only.

Working dc voltages, tolerances and temperature ranges are specified in the table below.

Available in a variety of mechanical styles and mountings.

CAPACITANCES

Spec	List	Cap mf	Working DC Volts	Tol ± %	Temp Range °C	Dim Fig	Sch Fig	A	B	C	D	L	W	Lead #AWG
KS-14755	1	1.0	300	10	-55 +85	8	12				0.750	2-1/16	1-1/4	20
KS-14571	1	1.0	100	10	-55 +85	9	11				0.686	1-21/32	7/8	20
KS-14981	1	0.68	100	20	-55 +85	1	11				0.578	1-13/32		20
KS-14570	1	0.33	100	10	-55 +85	10	13				0.578	1-3/32		20
KS-14733	1	0.22	400	10	-55 +85	3	11				0.578	1-7/16		20
KS-14755	2	0.10	300	10	-55 +85	8	12				0.400	1-1/16	5/8	20
KS-14660	1	0.10	150	10	-55 +85	7	13			See	Fig.	7		

TCI Library www.telephonecollectors.info

PAPER, TUBULAR, SUBMINIATURE

Spec	List	Cap mf	Workg DC Volts	Tol ± %	Temp Range °C	Dim Fig	Sch Fig	A	B	C	D	L	W	Lead # Awg
KS-14980	2	0.027	100	10	-55 +85	1	11				0.328	29/32		22
KS-14980	1	0.012	100	10	-55 +85	1	11				0.251	25/32		22

TCI Library www.telephonecollectors.info

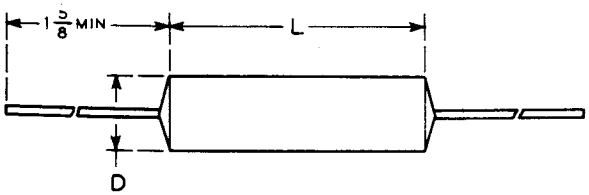

FIG. 1

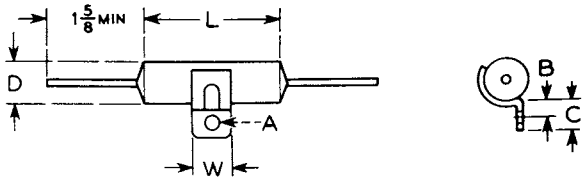

FIG. 2

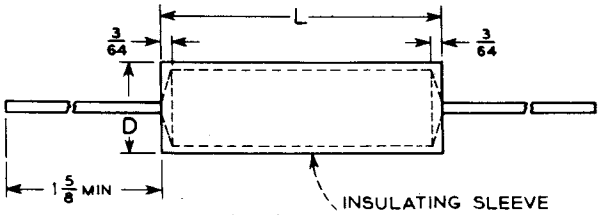

FIG. 3

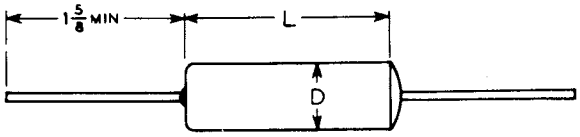

FIG. 4

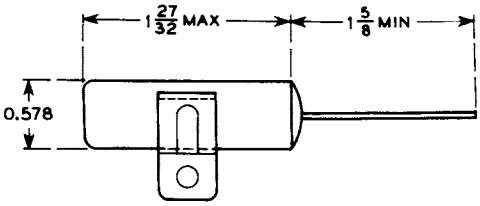

OTHERWISE SAME AS FIG. 2

FIG. 5

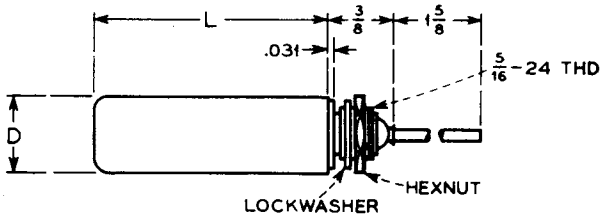

FIG. 6

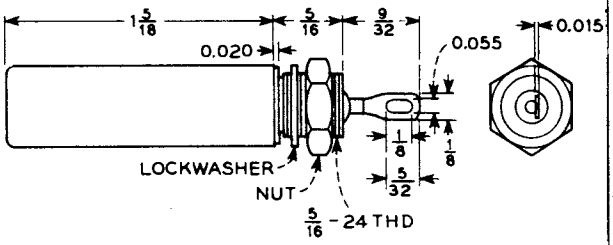

FIG. 7

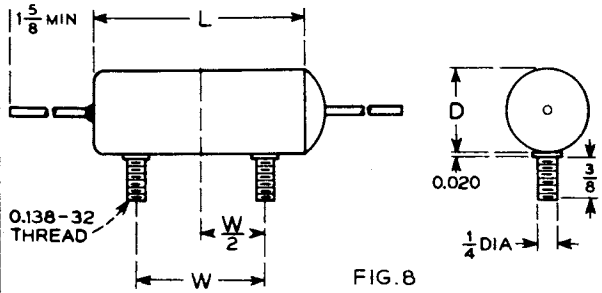

FIG. 8

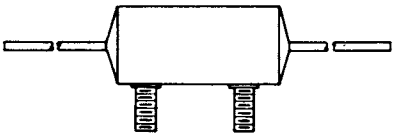

OTHERWISE SAME AS FIG. 8

FIG. 9

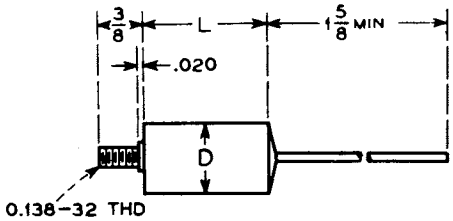

FIG. 10

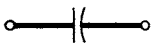

FIG. 11

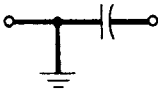

FIG. 12

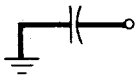

FIG. 13

TCI Library www.telephonecollectors.info

TCI Library www.telephonecollectors.info

DESCRIPTION

Wax impregnated paper or mylar capacitors which are small, inexpensive and suitable for use only where great reliability is not required.

Principal Applications: Amplifiers and networks.

Operating Temperature Range: 0° to +120°F

For Bell System use only.

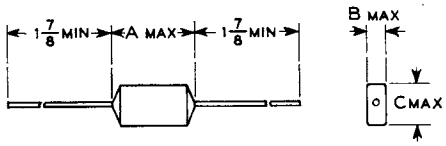

FIG. 1

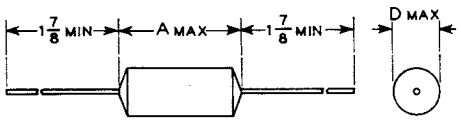

FIG. 2

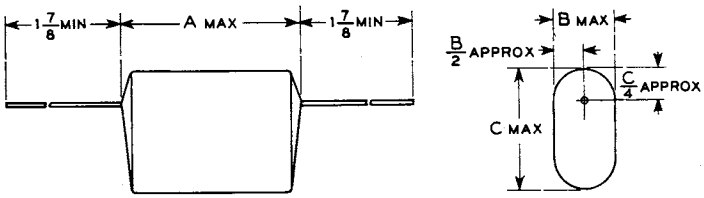

FIG. 3

CAPACITANCES

Spec	List	Cap Mf	Rated DC Volts	Tolerance Percent	Fig	Maximum Dimensions A	B	C	D
KS-14081	2	1.0	200	±20	2	1-7/8			25/32
KS-13815	1	1.0	150	+30 -10	1	1-7/8	15/32	11/16	
KS-13815	3	1.0	150	+30 -10	1	1-1/4	21/32	1-1/64	
KS-14081	3	1.0	150	±20	2	1-7/16			25/32
KS-14081	1	0.5	150	±20	2	1-7/16			37/64
KS-13815	5	0.50	150	±10	1	1-1/4	11/32	31/32	
KS-13815	2	0.25	200	±20	1	1-1/4	1/2	11/16	
KS-13815	4	0.25	150	±10	1	7/8	25/64	49/64	
KS-14420	1	0.15	200	±15	3	1-1/16	11/32	23/32	
KS-13814	6	0.15	150	±20	1	15/16	19/64	5/8	
KS-13814	10	0.10	200	±10	1	15/16	5/16	21/32	
KS-13814	4	0.10	150	±20	1	15/16	9/32	9/16	
KS-13814	9	0.10	150	±10	1	15/16	9/32	9/16	
KS-13669	9	0.10	150	±10	1	0.625	0.188	0.391	
KS-13669	2	0.10	100	±25	1	0.875	0.268	0.495	
KS-13669	4	0.10	100	±20	1	0.875	0.250	0.562	
KS-13669	8	0.10	100	±20	1	1.210	0.240	0.375	
KS-13669	7	0.10	100	±20	1	0.938	0.140	0.281	
KS-13669	5	0.10	100	±20	1	1.350	0.190	0.400	
KS-13814	5	0.075	150	±20	1	15/16	13/64	17/32	
KS-14290	1	0.05	400	+15 -10	2	15/16			1/2
KS-13814	1	0.05	150	+30 -10	1	15/16	7/32	1/2	
KS-13669	1	0.05	100	±25	1	0.875	0.168	0.445	
KS-13669	3	0.05	100	±20	1	0.938	0.168	0.445	
KS-13814	11	0.022	150	±10	1	15/16	7/32	1/2	
KS-14289	4	0.02	400	+15 -10	1	15/16	7/32	1/2	
KS-13814	3	0.02	150	±20	1	15/16	7/32	1/2	
KS-13814	7	0.02	150	±10	1	15/16	7/32	1/2	
KS-14289	3	0.01	400	+15 -10	1	13/16	7/32	1/2	
KS-13814	2	0.01	150	±10	1	13/16	7/32	1/2	
KS-14289	2	0.005	400	+15 -10	1	11/16	7/32	1/2	
KS-13814	8	0.005	150	+50 -25	1	5/8	7/32	11/32	
KS-13669	6	0.00035	100	+65 -25	1	0.938	0.110	0.281	

TCI Library www.telephonecollectors.info

TCI Library www.telephonecollectors.info

DESCRIPTION

Rectangular paper capacitors with separate spade brackets or attached mounting brackets, impregnated and filled with either mineral oil (Characteristic E) or chlorinated diphenyl (Characteristic F), of the same physical sizes as CP61 and CP65 of specification MIL-C-25A.

Intended primarily for use on dc potentials as blocking, filter and by-pass capacitors in Bell System and Non-Government applications where long life and high reliability are essential. For this reason it is recommended that the normal dc operating voltage should not exceed 50% of the manufacturer's rating shown on the drawings of the specification. Values of the "Maximum Recommended DC Working Voltages" are shown below.

Operating Temperature Range: -55° to +85°C.

Suitable for use under tropical humidity conditions.

Only those characteristic F capacitors are included which offer a size advantage over the E characteristic capacitors of the same rating.

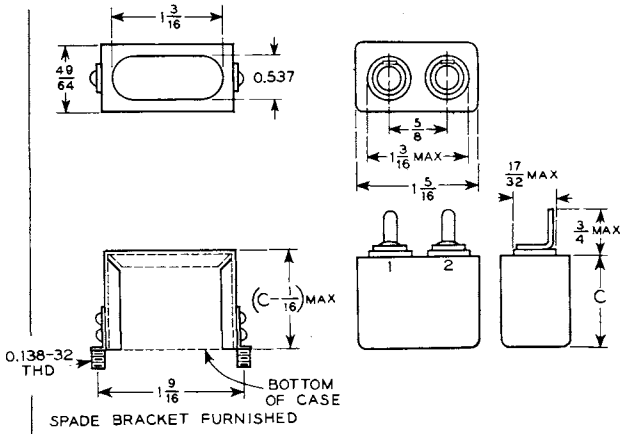

CP61

CHARACTERISTIC E KS	C	CHARACTERISTIC F KS	C
13440	1-1/16	13466	1-3/8
13441	1-3/8	13467	1-5/8
13442	1-5/8	13468	2
13443	2	13469	2-1/2
13444	2-1/2		
13445	2-3/4		

MAXIMUM RECOMMENDED DC WORKING VOLTAGE = 750

KS	List	Cap mf	Tol %	Fig	Characteristic
13443, 13449	9	2x0.05	±15	B	E
13443, 13449	10	2x0.05	+20 -10	B	E
13440, 13446	13	2x0.01	±15	B	E
13440, 13446	14	2x0.01	+20 -10	B	E

MAXIMUM RECOMMENDED DC WORKING VOLTAGE = 500

KS	List	Cap mf	Tol %	Fig	Characteristic
13445, 13451	3	0.5	±10	A	E
13445, 13451	4	0.5	+20 -10	A	E
13469, 13473	3	0.5	±10	A	F
13469, 13473	4	0.5	+20 -10	A	F
13443, 13449	3	0.25	±10	A	E
13443, 13449	4	0.25	+20 -10	A	E
13441, 13447	7	0.1	±10	A	E
13441, 13447	8	0.1	+20 -10	A	E
13441, 13447	5	0.05	±10	A	E
13441, 13447	6	0.05	+20 -10	A	E
13440, 13446	7	0.02	±10	A	E
13440, 13446	8	0.02	+20 -10	A	E
13440, 13446	5	0.01	±10	A	E
13440, 13446	6	0.01	+20 -10	A	E
13445, 13451	7	2x0.25	±15	B	E
13445, 13451	8	2x0.25	+20 -10	B	E
13469, 13473	7	2x0.25	±15	B	F
13469, 13473	8	2x0.25	+20 -10	B	F
13443, 13449	7	2x0.1	±15	B	E
13443, 13449	8	2x0.1	+20 -10	B	E
13467, 13471	1	2x0.1	±15	B	F
13467, 13471	2	2x0.1	+20 -10	B	F
13441, 13447	15	2x0.05	±15	B	E
13441, 13447	16	2x0.05	+20 -10	B	E
13441, 13447	13	2x0.02	±15	B	E
13441, 13447	14	2x0.02	+20 -10	B	E
13440, 13446	11	2x0.01	±15	B	E
13440, 13446	12	2x0.01	+20 -10	B	E

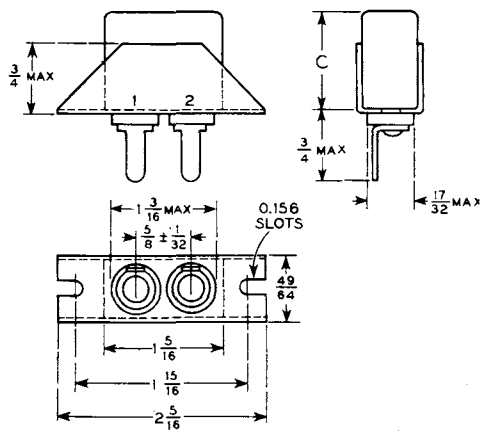

CP65

CHARACTERISTIC E KS	C	CHARACTERISTIC F KS	C
13446	1-1/16	13470	1-3/8
13447	1-3/8	13471	1-5/8
13448	1-5/8	13472	2
13449	2	13473	2-1/2
13450	2-1/2		
13451	2-3/4		

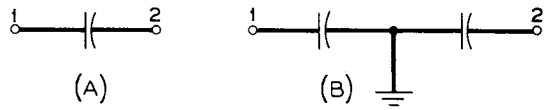

COMPARISON OF CHARACTERISTICS

	E	F
At 25°C, minimum (megohms x microfarads) or minimum megohms, insulation resistance	2000 6000	1500 4500
At 85°C, minimum (megohms x microfarads) or minimum megohms, insulation resistance	20 600	15 450
Maximum capacitance change at -55°C from values at 25°C, per cent	15	30

TCI Library www.telephonecollectors.info

TABLE 11.10 **PAPER, RECTANGULAR, BRACKETS, 1-2 SECTIONS**

MAXIMUM RECOMMENDED DC WORKING VOLTAGE = 300

KS	List	Cap mf	Tol %	Fig	Charac-teristic
13445, 13451	1	1.0	±10	A	E
13445, 13451	9	1.0	±5	A	E
13445, 13451	2	1.0	+20 -10	A	E
13469, 13473	1	1.0	±10	A	F
13469, 13473	2	1.0	+20 -10	A	F
13443, 13449	1	0.5	±10	A	E
13443, 13449	2	0.5	+20 -10	A	E
13442, 13448	1	0.25	±10	A	E
13442, 13448	2	0.25	+20 -10	A	E
13441, 13447	3	0.1	±10	A	E
13441, 13447	4	0.1	+20 -10	A	E
13440, 13446	3	0.05	±10	A	E
13440, 13446	4	0.05	+20 -10	A	E
13445, 13451	5	2x0.5	±15	B	E
13445, 13451	6	2x0.5	+20 -10	B	E
13469, 13473	5	2x0.5	±15	B	F
13469, 13473	6	2x0.5	+20 -10	B	F
13443, 13449	5	2x0.25	±15	B	E
13443, 13449	6	2x0.25	+20 -10	B	E
13442, 13448	3	2x0.1	±15	B	E
13442, 13448	4	2x0.1	+20 -10	B	E
13466, 13470	1	2x0.1	±15	B	F
13466, 13470	2	2x0.1	+20 -10	B	F
13441, 13447	11	2x0.05	±15	B	E
13441, 13447	12	2x0.05	+20 -10	B	E

MAXIMUM RECOMMENDED DC WORKING VOLTAGE = 200

KS	List	Cap mf	Tol %	Fig	Charac-teristic
13444, 13450	1	1.0	±10	A	E
13444, 13450	2	1.0	+20 -10	A	E
13468, 13472	1	1.0	±10	A	F
13468, 13472	2	1.0	+20 -10	A	F
13441, 13447	1	0.25	±10	A	E
13441, 13447	2	0.25	+20 -10	A	E
13440, 13446	1	0.1	±10	A	E
13440, 13446	2	0.1	+20 -10	A	E
13444, 13450	3	2x0.5	±15	B	E
13444, 13450	4	2x0.5	+20 -10	B	E
13441, 13447	9	2x0.1	±15	B	E
13441, 13447	10	2x0.1	+20 -10	B	E
13440, 13446	9	2x0.05	±15	B	E
13440, 13446	10	2x0.05	+20 -10	B	E

TCI Library www.telephonecollectors.info

DESCRIPTION

Rectangular style paper capacitors, with mounting brackets, impregnated and filled with either mineral oil (Characteristic E) or chlorinated diphenyl (Characteristic F), of the same physical sizes as CP69 of specification MIL-C-25A.

Intended primarily for use on dc potentials as blocking, filter and by-pass capacitors in Bell System and non-Government applications where long life and high reliability are essential. For this reason it is recommended that the normal dc operating voltage should not exceed 50% of the manufacturer's rating shown on the drawings of the specification. Values of the "Maximum Recommended DC Working Voltages" are shown below.

Operating Temperature Range: -55° to +85°C.

Suitable for use under tropical humidity conditions.

Only those characteristic F capacitors are included which offer a size advantage over the E characteristic capacitors of the same rating.

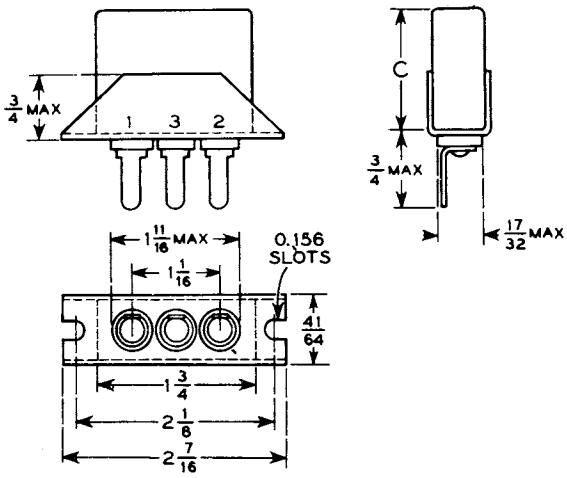

CHARACTERISTIC E		CHARACTERISTIC F	
KS	C	KS	C
13452	1-1/16	13474	1-1/16
13453	1-1/2	13475	1-1/2
13454	2	13476	2-1/2
13455	2-1/2		
13456	2-3/4		

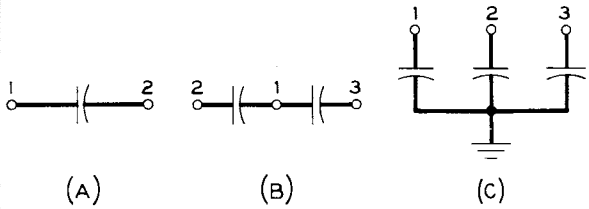

Circuit diagram "A" uses terminals 1 and 2, and terminal 3 is omitted. For diagram "B", terminal 1 is the common terminal and is marked C.

CAPACITANCES

MAXIMUM RECOMMENDED DC WORKING VOLTAGE = 500

KS	List	Cap mf	Tol %	Fig	Characteristic
13456	3	0.5	±10	A	E
13456	4	0.5	+20 -10	A	E
13476	3	0.5	±10	A	F
13476	4	0.5	+20 -10	A	F
13454	3	0.25	±10	A	E
13454	4	0.25	+20 -10	A	E
13453	3	0.1	±10	A	E
13453	4	0.1	+20 -10	A	E
13474	1	0.1	±10	A	F
13474	2	0.1	+20 -10	A	F
13452	9	0.05	±10	A	E
13452	10	0.05	+20 -10	A	E
13452	7	0.02	±10	A	E
13452	8	0.02	+20 -10	A	E
13452	5	0.01	±10	A	E
13452	6	0.01	+20 -10	A	E
13456	7	2x0.25	±15	B	E
13456	8	2x0.25	+20 -10	B	E
13476	7	2x0.25	±15	B	F
13476	8	2x0.25	+20 -10	B	F
13454	7	2x0.1	±15	B	E
13454	8	2x0.1	+20 -10	B	E
13475	1	2x0.1	±15	B	F
13475	2	2x0.1	+20 -10	B	F
13453	7	2x0.05	±15	B	E
13453	8	2x0.05	+20 -10	B	E
13474	3	2x0.05	±15	B	F
13474	4	2x0.05	+20 -10	B	F
13452	15	2x0.02	±15	B	E
13452	16	2x0.02	+20 -10	B	E
13452	13	2x0.01	±15	B	E
13452	14	2x0.01	+20 -10	B	E
13455	1	3x0.1	±20	C	E
13455	2	3x0.1	+20 -10	C	E
13453	13	3x0.05	±20	C	E
13453	14	3x0.05	+20 -10	C	E
13452	19	3x0.02	±20	C	E
13452	20	3x0.02	+20 -10	C	E
13452	17	3x0.01	±20	C	E
13452	18	3x0.01	+20 -10	C	E

COMPARISON OF CHARACTERISTICS

	E	F
At 25°C, minimum (megohms x microfarads) or minimum megohms, insulation resistance	2000 6000	1500 4500
At 85°C, minimum (megohms x microfarads) or minimum megohms, insulation resistance	20 600	15 450
Maximum capacitance change at -55°C from values at 25°C, per cent	15	30

TCI Library www.telephonecollectors.info

TABLE 11.11 **PAPER, RECTANGULAR, BRACKETS, 1-3 SECTIONS**

MAXIMUM RECOMMENDED DC WORKING VOLTAGE = 300

KS	List	Cap mf	Tol %	Fig	Charac-teristic
13456	1	1.0	±10	A	E
13456	2	1.0	+20 -10	A	E
13476	1	1.0	±10	A	F
13476	2	1.0	+20 -10	A	F
13454	1	0.5	±10	A	E
13454	2	0.5	+20 -10	A	E
13453	1	0.25	±10	A	E
13453	2	0.25	+20 -10	A	E
13452	3	0.1	±10	A	E
13452	4	0.1	+20 -10	A	E
13452	1	0.05	±10	A	E
13452	2	0.05	+20 -10	A	E
13456	5	2x0.5	±15	B	E
13456	6	2x0.5	+20 -10	B	E
13476	5	2x0.5	±15	B	F
13476	6	2x0.5	+20 -10	B	F
13454	5	2x0.25	±15	B	E
13454	6	2x0.25	+20 -10	B	E
13453	5	2x0.1	±15	B	E
13453	6	2x0.1	+20 -10	B	E
13452	11	2x0.05	±15	B	E
13452	12	2x0.05	+20 -10	B	E
13456	9	3x0.25	±20	C	E
13456	10	3x0.25	+20 -10	C	E
13476	9	3x0.25	±20	C	F
13476	10	3x0.25	+20 -10	C	F
13453	11	3x0.1	±20	C	E
13453	12	3x0.1	+20 -10	C	E
13453	9	3x0.05	±20	C	E
13453	10	3x0.05	+20 -10	C	E
13474	5	3x0.05	±20	C	F
13474	6	3x0.05	+20 -10	C	F

TCI Library www.telephonecollectors.info

DESCRIPTION

Hermetically sealed, oil impregnated and filled, paper capacitors in tubular metal cases.

Principal Application: By-Pass capacitors in electronic chassis.

Operating Temperature Range: -55° to +85°C.

Suitable for use under tropical humidity conditions.

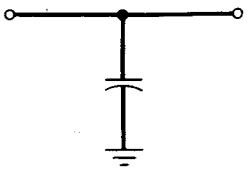

SCHEMATIC

CAPACITANCES

Spec.	List	Cap. MF	Tolerance Percent	Rated DC Volts	Fig.	Remarks
KS-13807	-	0.020	+20 -10	400	1	For Bell System use only.
KS-14658	-	0.020	+20 -10	600	4	For Bell System use only.
KS-14659	-	0.0075	+20 -10	600	5	For Bell System use only.

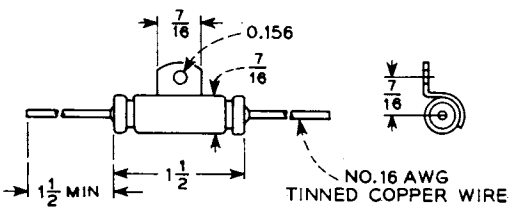

FIG. 1

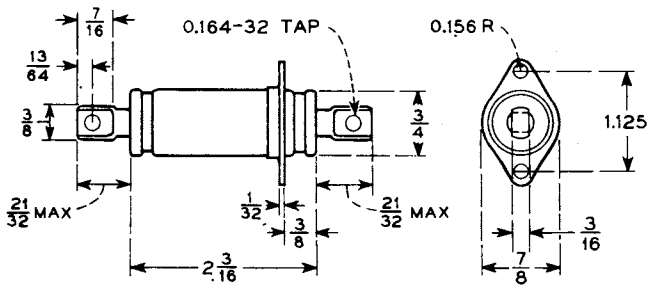

FIG. 2

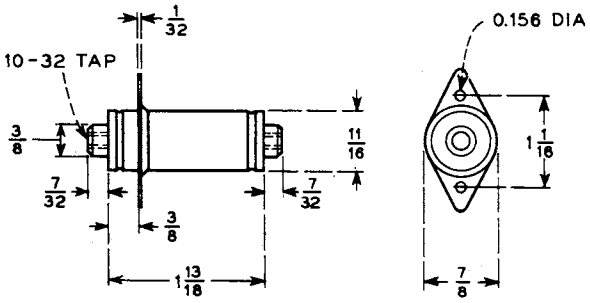

FIG. 3

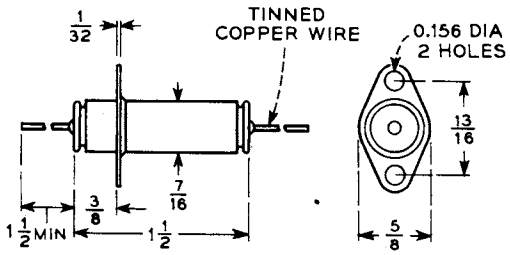

FIG. 4

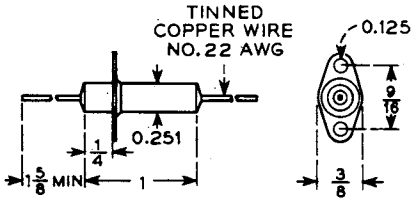

FIG. 5

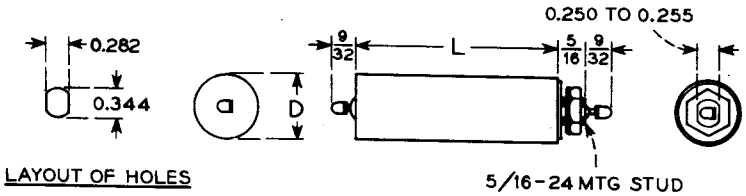

FIG. 6

TCI Library www.telephonecollectors.info

TCI Library www.telephonecollectors.info

DATA SHEET **PAPER, MOLDED, TUBULAR AND POSTAGE STAMP** **TABLE 11.13**

DESCRIPTION

Synthetic resin or mineral oil impregnated paper capacitors in molded phenolic cases. Exposed surfaces coated with high melting point mineral wax or glyptal lacquer.

Suitable for use under tropical humidity conditions.

Operating Temperature Range: -55° to +85°C

Principal Applications: Electronic circuits and transmission networks.

Capacitors are marked in characters or by color coding.

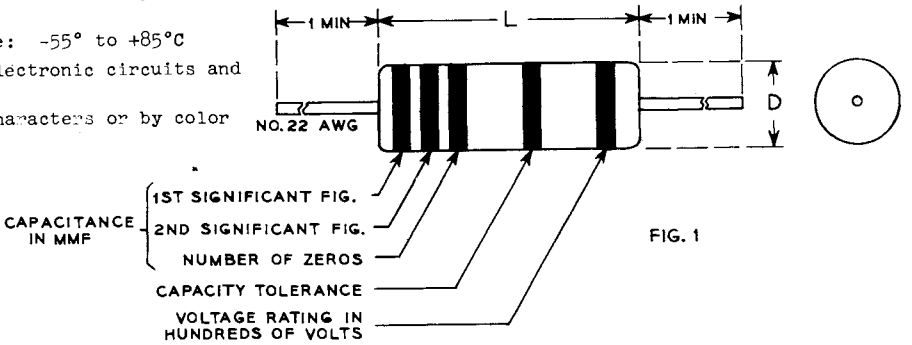

FIG. 1

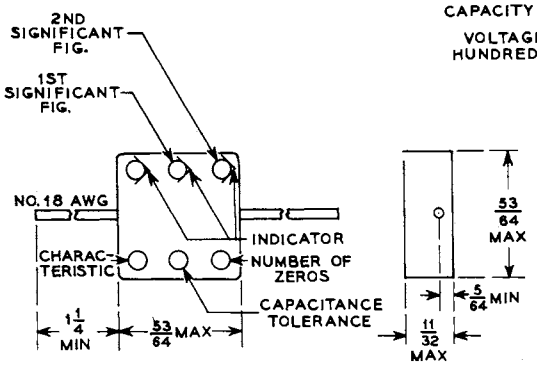

FIG. 2

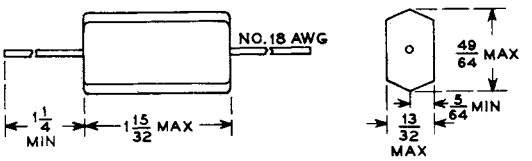

SHAPE MAY BE RECTANGULAR OR SIDES MAY BE TAPERED

FIG. 3

CAPACITANCES

Spec.	List	Cap mf	Tol %	Rated DC Volts	Fig	Dimensions Inches D	Dimensions Inches L
KS-13849	1	0.20	10	60	3	-	-
KS-13849	2	0.10	30	200	3	-	-
KS-13849	5	0.10	10	200	3	-	-
KS-13849	3	0.060	10	250	3	-	-
KS-13614	6	0.050	20	60	2	-	-

TCI Library www.telephonecollectors.info

PAPER, MOLDED, TUBULAR AND POSTAGE STAMP

Spec.	List	Cap mf	Tol %	Rated DC Volts	Fig	Dimensions Inches D	Dimensions Inches L
KS-13614	4	0.020	20	150	2	-	-
KS-13614	3	0.010	20	300	2	-	-
KS-13849	4	0.0080	10	500	3	-	-
KS-13614	2	0.0060	20	300	2	-	-
KS-13614	1	0.0030	20	400	2	-	-
KS-13614	5	0.0010	20	300	2	-	-

TCI Library www.telephonecollectors.info

DATA SHEET **PAPER, MOLDED, TUBULAR, PIGTAILS** **TABLE 11.14**

DESCRIPTION

Synthetic resin impregnated paper capacitors in molded phenolic cases. Exposed surfaces coated with high melting point mineral wax or glyptal lacquer.

Suitable for use under tropical humidity conditions.

Operating Temperature Range: -55°.to +85°C

Principal Applications: Electronic circuits and transmission networks.

Capacitors are marked by color coding.

When specifying or ordering these capacitors, state the "KS" number, list number and nominal capacitance value, as for example, "KS-14138 L1 0.0056 mf".

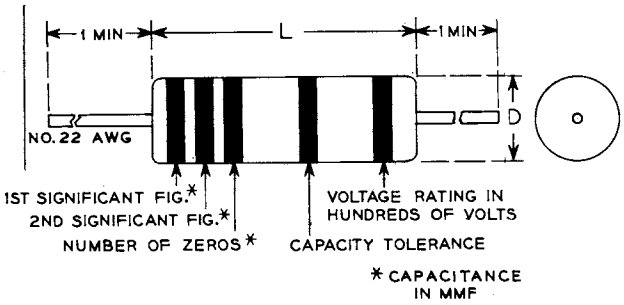

CAPACITANCES

KS-	List	Cap mf	Rated DC Volts	Tol ±%	Dimensions Inches D	Dimensions Inches L
14144	2	0.150	50	20	0.375	1-1/16
14144	1	0.150	50	10	0.375	1-1/16
14144	1	0.120	50	10	0.375	1-1/16
14144	2	0.100	100	20	0.375	1-1/16
14144	1	0.100	100	10	0.375	1-1/16
14144	3	0.100	100	5	0.375	1-1/16
14144	3	0.090	100	5	0.375	1-1/16
14144	1	0.086	100	10	0.375	1-1/16
14144	1	0.082	100	10	0.375	1-1/16
14144	2	0.068	100	20	0.375	1-1/16
14144	1	0.068	100	10	0.375	1-1/16
14144	3	0.067	100	5	0.375	1-1/16
14144	3	0.065	100	5	0.375	1-1/16
14144	3	0.062	100	5	0.375	1-1/16
14144	1	0.056	100	10	0.375	1-1/16
14144	2	0.047	100	20	0.375	1-1/16
14144	1	0.047	100	10	0.375	1-1/16
14144	3	0.047	100	5	0.375	1-1/16
14143	2	0.047	50	20	0.250	1-1/16
14143	1	0.047	50	10	0.250	1-1/16
14144	1	0.043	100	10	0.375	1-1/16
14144	1	0.039	100	10	0.375	1-1/16
14144	3	0.039	100	5	0.375	1-1/16
14143	1	0.039	50	10	0.250	1-1/16
14144	2	0.033	150	20	0.375	1-1/16
14144	1	0.033	150	10	0.375	1-1/16
14143	2	0.033	100	20	0.250	1-1/16
14143	1	0.033	100	10	0.250	1-1/16
14143	3	0.030	100	5	0.250	1-1/16
14144	1	0.027	150	10	0.375	1-1/16
14143	1	0.027	100	10	0.250	1-1/16
14143	1	0.024	100	10	0.250	1-1/16
14144	2	0.022	150	20	0.375	1-1/16
14144	1	0.022	150	10	0.375	1-1/16
14143	2	0.022	100	20	0.250	1-1/16
14143	1	0.022	100	10	0.250	1-1/16
14143	3	0.022	100	5	0.250	1-1/16
14140	2	0.022	50	20	0.250	3/4
14142	2	0.022	50	20	0.195	1-1/16
14140	1	0.022	50	10	0.25	3/4
14142	1	0.022	50	10	0.195	1-1/16
14144	1	0.018	150	10	0.375	1-1/16
14143	1	0.018	100	10	0.250	1-1/16
14140	1	0.018	50	10	0.250	3/4
14142	1	0.018	50	10	0.195	1-1/16
14144	2	0.015	150	20	0.375	1-1/16
14144	1	0.015	150	10	0.375	1-1/16
14140	2	0.015	100	20	0.250	3/4
14142	2	0.015	100	20	0.195	1-1/16
14140	1	0.015	100	10	0.250	3/4
14142	1	0.015	100	10	0.195	1-1/16
14142	3	0.015	100	5	0.195	1-1/16
14141	2	0.015	50	20	0.175	1-1/16
14141	1	0.015	50	10	0.175	1-1/16
14143	1	0.012	150	10	0.250	1-1/16
14140	1	0.012	100	10	0.250	3/4
14142	1	0.012	100	10	0.195	1-1/16
14141	1	0.012	50	10	0.175	1-1/16
14142	2	0.0100	150	20	0.195	1-1/16
14142	1	0.0100	150	10	0.195	1-1/16
14140	2	0.0100	100	20	0.250	3/4
14140	1	0.0100	100	10	0.250	3/4
14141	2	0.0100	63	20	0.175	1-1/16
14141	1	0.0100	63	10	0.175	1-1/16
14139	2	0.0100	50	20	0.200	3/4
14139	1	0.0100	50	10	0.200	3/4
14142	1	0.0082	150	10	0.195	1-1/16
14140	1	0.0082	100	10	0.250	3/4
14141	1	0.0082	100	10	0.175	1-1/16
14139	1	0.0082	50	10	0.200	3/4
14141	2	0.0068	150	20	0.175	1-1/16
14141	1	0.0068	150	10	0.175	1-1/16
14139	2	0.0068	100	20	0.200	3/4
14139	1	0.0068	100	10	0.200	3/4
14138	2	0.0068	50	20	0.175	3/4
14138	1	0.0068	50	10	0.175	3/4
14141	1	0.0056	150	10	0.175	1-1/16
14139	1	0.0056	100	10	0.200	3/4
14138	1	0.0056	50	10	0.175	3/4
14139	2	0.0047	150	20	0.200	3/4
14141	2	0.0047	150	20	0.175	1-1/16
14139	1	0.0047	150	10	0.200	3/4
14141	1	0.0047	150	10	0.175	1-1/16
14138	2	0.0047	100	20	0.175	3/4
14138	1	0.0047	100	10	0.175	3/4
14139	1	0.0039	150	10	0.200	3/4
14141	1	0.0039	150	10	0.175	1-1/16
14138	1	0.0039	100	10	0.175	3/4
14142	2	0.0033	200	20	0.195	1-1/16
14142	1	0.0033	200	10	0.195	1-1/16
14138	2	0.0033	150	20	0.175	3/4
14141	1	0.0033	150	10	0.175	1-1/16
14138	1	0.0033	150	10	0.175	3/4
14142	1	0.0027	200	10	0.195	1-1/16
14138	1	0.0027	150	10	0.175	3/4
14141	2	0.0022	200	20	0.175	1-1/16
14141	1	0.0022	200	10	0.175	1-1/16
14138	2	0.0022	150	20	0.175	3/4
14138	1	0.0022	150	10	0.175	3/4
14141	1	0.0018	200	10	0.175	1-1/16
14138	1	0.0018	150	10	0.175	3/4
14139	2	0.0015	200	20	0.200	3/4
14141	2	0.0015	200	20	0.175	1-1/16
14139	1	0.0015	200	10	0.200	3/4
14141	1	0.0015	200	10	0.175	1-1/16
14138	2	0.0015	150	20	0.175	3/4
14138	1	0.0015	150	10	0.175	3/4
14139	1	0.0012	200	10	0.200	3/4
14141	1	0.0012	200	10	0.175	1-1/16
14138	1	0.0012	150	10	0.175	3/4
14138	2	0.00100	200	20	0.175	3/4
14138	1	0.00100	200	10	0.175	3/4
14138	1	0.00082	200	10	0.175	3/4
14138	2	0.00068	200	20	0.175	3/4
14138	1	0.00068	200	10	0.175	3/4
14138	1	0.00056	200	10	0.175	3/4
14138	2	0.00047	200	20	0.175	3/4
14138	1	0.00047	200	10	0.175	3/4

TCI Library www.telephonecollectors.info

DESCRIPTION

Tubular style, mineral oil impregnated and filled paper capacitors of the same physical sizes as CP26 and CP29, Characteristic E, of specification MIL-C-25A.

Intended primarily for use on dc potentials as blocking, filter and by-pass capacitors in Bell System and non-Government equipments where long life and high reliability are essential. For this reason it is recommended that the normal d-c operating voltage should not exceed 50 percent of the manufacturer's rating shown on the drawings of the specification. Values of the "Maximum Recommended DC Working Voltages" are shown below.

Operating Temperature Range: -55° to +85°C.

Suitable for use under tropical humidity conditions.

CAPACITANCES

MAXIMUM RECOMMENDED DC WORKING VOLTAGE = 750

KS	List	Cap mf	Tol %	Fig
13412, 13437	5	0.1	±10	A
13412, 13437	6	0.1	±20	A
13410, 13435	3	0.05	±10	A
13410, 13435	4	0.05	±20	A
13408, 13433	1	0.02	±10	A
13408, 13433	2	0.02	±20	A
13406, 13431	5	0.01	±10	A
13406, 13431	6	0.01	±20	A
13406, 13431	3	0.006	±10	A
13406, 13431	4	0.006	±20	A
13406, 13431	1	0.003	±20	A
13406, 13431	2	0.003	+20 -10	A
13411, 13436	5	0.1	±10	B
13411, 13436	6	0.1	±20	B
13409, 13434	3	0.05	±10	B
13409, 13434	4	0.05	±20	B
13407, 13432	1	0.02	±10	B
13407, 13432	2	0.02	±20	B
13405, 13430	5	0.01	±10	B
13405, 13430	6	0.01	±20	B
13405, 13430	3	0.006	±10	B
13405, 13430	4	0.006	±20	B
13405, 13430	1	0.003	±20	B
13405, 13430	2	0.003	+20 -10	B

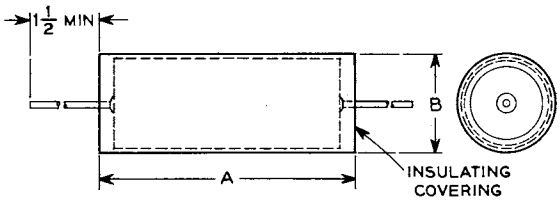

CP 26

KS-	A	B
13390	1-3/16	1/2
13391	1-5/16	1/2
13392	1-11/16	1/2
13393	1-13/16	1/2
13394	1-3/16	11/16
13395	1-5/16	11/16
13396	1-9/16	11/16
13397	1-11/16	11/16
13398	1-13/16	11/16
13399	1-15/16	11/16
13400	2-1/16	11/16
13401	1-11/16	13/16
13402	1-13/16	13/16
13403	2-3/16	13/16
13404	2-5/16	13/16

KS-	A	B
13405	1-5/16	1-1/16
13406	1-7/16	1-1/16
13407	1-11/16	1-1/16
13408	1-13/16	1-1/16
13409	1-15/16	1-1/16
13410	2-1/16	1-1/16
13411	2-3/16	1-1/16
13412	2-5/16	1-1/16
13413	2-11/16	1-1/16
13414	2-13/16	1-1/16

Leads are No. 20 AWG (0.032) tinned copper wire for 1/2 inch outside diameter cases and No. 18 (0.040) for the others.

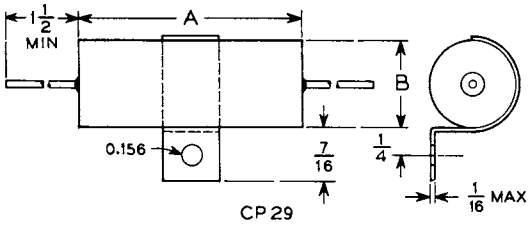

CP 29

KS-	A	B
13415	1	7/16
13416	1-1/8	7/16
13417	1-1/2	7/16
13418	1-5/8	7/16
13419	1	5/8
13420	1-1/8	5/8
13421	1-3/8	5/8
13422	1-1/2	5/8
13423	1-5/8	5/8
13424	1-3/4	5/8
13425	1-7/8	5/8
13426	1-1/2	3/4
13427	1-5/8	3/4
13428	2	3/4
13429	2-1/8	3/4

KS-	A	B
13430	1-1/8	1
13431	1-1/4	1
13432	1-1/2	1
13433	1-5/8	1
13434	1-3/4	1
13435	1-7/8	1
13436	2	1
13437	2-1/8	1
13438	2-1/2	1
13439	2-5/8	1

Leads are No. 20 AWG tinned copper wire for 7/16 inch outside diameter cases, No. 18 for 3/4 inch and 1 inch cases and either No. 18 or 20 for 5/8 inch cases.

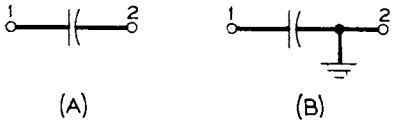

(A) (B)

TCI Library www.telephonecollectors.info

TABLE 11.15

PAPER, TUBULAR, PIGTAILS

MAXIMUM RECOMMENDED DC
WORKING VOLTAGE = 500

KS	List	Cap mp	Tol %	Fig
13414, 13439	3	0.25	±10	A
13414, 13439	4	0.25	±20	A
13410, 13435	1	0.1	±10	A
13410, 13435	2	0.1	±20	A
13402, 13427	1	0.05	±10	A
13402, 13427	2	0.05	±20	A
13397, 13422	5	0.02	±10	A
13397, 13422	6	0.02	±20	A
13395, 13420	4	0.01	±10	A
13395, 13420	5	0.01	±20	A
13395, 13420	2	0.006	±10	A
13395, 13420	3	0.006	±20	A
13395, 13420	1	0.003	±20	A
13413, 13438	3	0.25	±10	B
13413, 13438	4	0.25	±20	B
13409, 13434	1	0.1	±10	B
13409, 13434	2	0.1	±20	B
13401, 13426	1	0.05	±10	B
13401, 13426	2	0.05	±20	B
13396, 13421	3	0.02	±10	B
13396, 13421	4	0.02	±20	B
13394, 13419	4	0.01	±10	B
13394, 13419	5	0.01	±20	B
13394, 13419	2	0.006	±10	B
13394, 13419	3	0.006	±20	B
13394, 13419	1	0.003	±20	B

MAXIMUM RECOMMENDED DC
WORKING VOLTAGE = 300

KS	List	Cap mf	Tol %	Fig
13414, 13439	1	0.5	±10	A
13414, 13439	2	0.5	±20	A
13412, 13437	3	0.25	±10	A
13412, 13437	4	0.25	±20	A
13400, 13425	1	0.1	±10	A
13400, 13425	2	0.1	±20	A
13397, 13422	3	0.05	±10	A
13397, 13422	4	0.05	±20	A
13397, 13422	7	0.04	±10	A
13393, 13418	1	0.02	±10	A
13393, 13418	2	0.02	±20	A
13391, 13416	3	0.01	±20	A
13391, 13416	4	0.01	+20 -10	A
13391, 13416	2	0.006	±20	A
13391, 13416	1	0.003	±20	A
13413, 13438	1	0.5	±10	B
13413, 13438	2	0.5	±20	B
13411, 13436	3	0.25	±10	B
13411, 13436	4	0.25	±20	B
13399, 13424	1	0.1	±10	B
13399, 13424	2	0.1	±20	B
13396, 13421	5	0.05	±5	B
13396, 13421	1	0.05	±10	B
13396, 13421	2	0.05	±20	B
13392, 13417	1	0.02	±10	B
13392, 13417	2	0.02	±20	B
13390, 13495	3	0.01	±20	B
13390, 13415	4	0.01	+20 -10	B
13390, 13415	2	0.006	±20	B
13390, 13415	1	0.003	±20	B

MAXIMUM RECOMMENDED DC
WORKING VOLTAGE = 100

KS	List	Cap mf	Tol %	Fig
13412, 13437	1	0.5	±10	A
13412, 13437	2	0.5	±20	A
13404, 13429	1	0.25	±10	A
13404, 13429	2	0.25	±20	A
13398, 13423	1	0.1	±10	A
13398, 13423	2	0.1	±20	A
13411, 13436	1	0.5	±10	B
13411, 13436	2	0.5	±20	B
13403, 13428	1	0.25	±10	B
13403, 13428	2	0.25	±20	B
13397, 13422	1	0.1	±10	B
13397, 13422	2	0.1	±20	B

TCI Library www.telephonecollectors.info

DESCRIPTION

KS-13533 and KS-13538

Potted mica capacitors. Transmitting type.

Intended primarily for use in Bell System and non-government applications where long life and high reliability are essential.

Recommended peak working voltages (dc potential plus superimposed ac peak voltage) should be limited to 60 percent of the manufacturer's value of "peak working voltage" as shown on the respective drawings listed below.

Temperature Range: -55° to +70°C

Suitable for use under tropical humidity conditions.

At ambient temperatures above 40°C, the current ratings should be reduced as shown here:

Ambient Temperature °C	Percent Normal Rated Current
50	95
60	85
70	70

KS-13533

Same size as CM70 type of MIL-C-5A.

Current ratings, preferred capacitance values and peak working voltages are shown on drawing BO-114069.

List No	Letter Characteristic	Tolerance
1	B	±2%
2	B	±5
3	C	±2
4	C	±5
5	D	±2
6	D	±5

Capacitance Range, mmf	Recommended Peak Working Voltage
47-2400	3000
2700-7500	1800
8200-22,000	1200
24,000-51,000	900
56,000-75,000	600
82,000-100,000	300

KS-13538

Same size as CM85 type of MIL-C-5A.

Current ratings, preferred capacitance values and peak working voltages are shown on drawing BO-114070.

List No	Letter Characteristic	Tolerance
1	B	±5%
2	C	±5
3	D	±5

Capacitance Range, mmf	Recommended Peak Working Voltage
47-1100	12,000
1200-2000	9000
2200-4300	7200
4700-8200	6000
9100-11,000	4800
12,000-24,000	3000
27,000-68,000	1800
75,000-100,000	1200

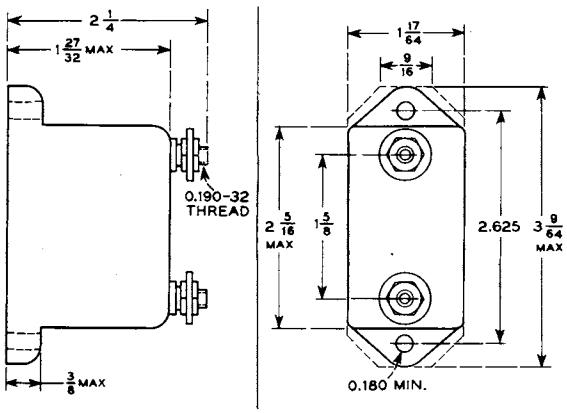

KS-13533

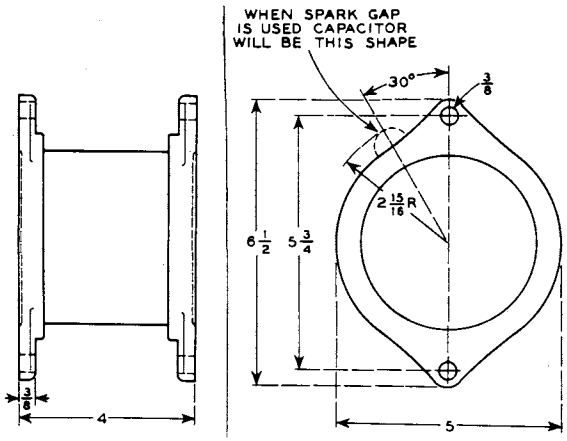

KS-13538

TCI Library www.telephonecollectors.info

TCI Library www.telephonecollectors.info

DATA SHEET **MICA, MOLDED, SCREWS OR PIGTAILS**

DESCRIPTION

Mica units encased in a low loss molding material. Suitable for use under tropical humidity conditions.

Principal Applications: Transmission networks and filters, electronic assemblies.

Operating Temperature Range: -55° to 85°C

References to MIL-C-5A designations are given for most of these capacitors.

When specifying or ordering these capacitors, state the "KS" or "GA" number, list number and nominal capacitance value, as for example "KS-13513L1 510mmf".

Capacitance values specified should be in multiples of "PREFERRED NUMBERS" listed elsewhere in this bulletin.

COLOR CODE

Color	Characteristic	Significant Figure	Multiplier	Tolerance Percent ±
Black	-	0	1	20(M)
Brown	B	1	10	-
Red	C	2	100	2(G)
Orange	D	3	1000	-
Yellow	E	4	-	-
Green	F	5	-	-
Blue	-	6	-	-
Purple (Violet)	-	7	-	-
Gray	-	8	-	-
White	-	9	-	-
Gold	-	-	0.1	5(J)
Silver	-	-	-	10(K)

CHARACTERISTICS

Letter	Temperature Coefficient	Capacitance Drift
	Parts/million/°C	
B	Not specified	Not specified
C	-200 to + 200	±0.5%
D	-100 to + 100	±0.3%
E	-20 to + 100	±(0.1% +0.1mmf)
F	0 to + 70	±(0.05% +0.1mmf)

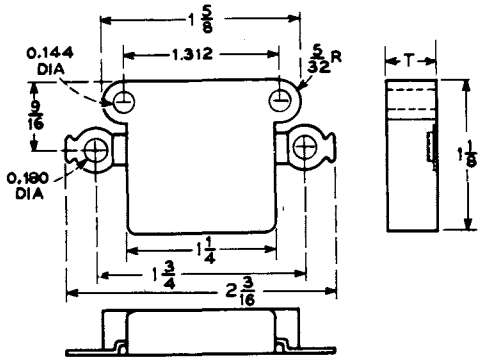

Code	T	MIL-C-5A
KS-13752	27/64	CM50
KS-13751	21/64	CM45

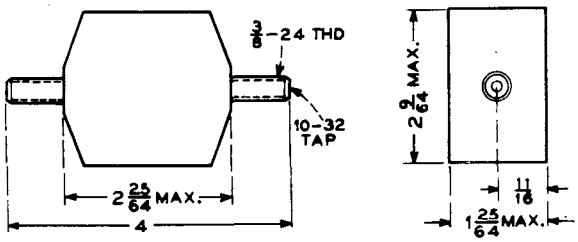

KS-14251

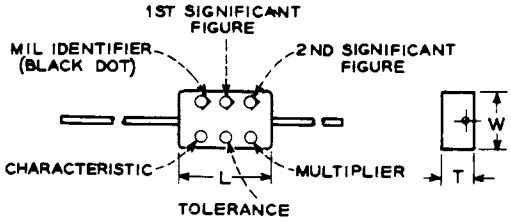

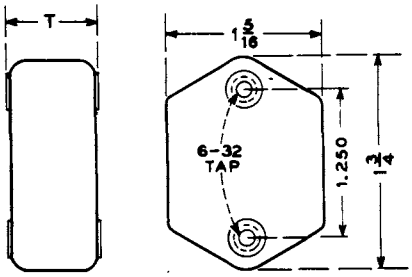

Code	T	MIL-C-5A
KS-13515	3/4	CM60
KS-13513	15/32	CM55

Code	Dimensions-Inches L	W	T	Lead Length	MIL-C-5A
KS-13369, 14228	1-1/64	5/8	5/16	1-3/8	CM40
KS-13368	51/64	51/64	5/16	1-1/8	CM35
KS-13367, 14058	51/64	51/64	1/4	1-1/8	CM30
KS-13366	1-1/16	7/16	3/16	1-1/8	CM25
KS-13365, 14057	47/64	7/16	3/16	1-1/8	CM20
KS-14056	33/64	19/64	3/16	1-1/8	CM15

TCI Library www.telephonecollectors.info

MICA, MOLDED, SCREWS OR PIGTAILS

KS-13515 — 4700mmf to 47,000mmf

Maximum Recommended DC Working Voltages

Capacitance Range, mmf	Volts
4700 to 16,000	1500
18,000 to 33,000	750
36,000 to 47,000	350

List	Tol. ±%	Characteristic	MIL-C-5A Designation
1	5	B	CM60B-J
2	10	B	CM60B-K
3	20	B	CM60B-M
4	2	C	CM60C-G
5	5	C	CM60C-J
6	10	C	CM60C-K

KS-13752 — 2000mmf to 27,000mmf

Maximum Recommended DC Working Voltages

Capacitance Range, mmf	Volts
2000 to 5100	1500
5600 to 11,000	750
12,000 to 27,000	350

List	Tol. ±%	Characteristic	MIL-C-5A Designation
1	5	B	CM50B-J
2	10	B	CM50B-K
3	20	B	CM50B-M
4	2	B	CM50B-G

KS-13369 — 3300mmf to 10,000mmf

Maximum Recommended DC Working Voltages

Capacitance Range, mmf	Volts
3300 to 8200	300
9100 to 10,000	200

List	Tol ±%	Characteristic	MIL-C-5A Designation
1	5	B	CM40B-J
2	10	B	CM40B-K
3	20	B	CM40B-M
4	2	C	CM40C-G
5	5	C	CM40C-J
6	10	C	CM40C-K
7	2	D	CM40D-G
8	5	D	CM40D-J
9	10	D	CM40D-K
10	2	E	CM40E-G
11	1	D	None
12	1/2	D	None
13	1	E	None
14	1/2	E	None

KS-13751 — 47mmf to 10,000mmf

Maximum Recommended DC Working Voltages

Capacitance Range, mmf	Volts
47 to 1800	1500
2000 to 3600	750
3900 to 10,000	350

List	Tol ±%	Characteristic	MIL-C-5A Designation
1	5	B	CM45B-J
2	10	B	CM45B-K
3	20	B	CM45B-M
4	2	B	CM45B-G

KS-13513 — 22mmf to 33,000mmf

Maximum Recommended DC Working Voltages

Capacitance Range, mmf	Volts
22 to 4300	1500
4700 to 13,000	750
15,000 to 33,000	350

List	Tol. ±%	Characteristic	MIL-C-5A Designation
1	5	B	CM55B-J
2	10	B	CM55B-K
3	20	B	CM55B-M
4	2	C	CM55C-G
5	5	C	CM55C-J
6	10	C	CM55C-K

KS-14251 — Nominal 10,000mmf (±20%)

Maximum Recommended DC Working Voltage
4000 Volts

Maximum ambient temperature 60°C.
Relative humidity 10-80%.

There is no MIL-C-5A equivalent.

KS-13368 — 470mmf to 10,000mmf

Maximum Recommended DC Working Voltages

Capacitance Range, mmf	Volts
470 to 6200	300
6800 to 10,000	200

List	Tol ±%	Characteristic	MIL-C-5A Designation
1	5	B	CM35B-J
2	10	B	CM35B-K
3	20	B	CM35B-M
4	2	C	CM35C-G
5	5	C	CM35C-J
6	10	C	CM35C-K
7	2	D	CM35D-G
8	5	D	CM35D-J
9	10	D	CM35D-K
10	2	E	CM35E-G
11	1	D	None
12	1/2	D	None
13	1	E	None
14	1/2	E	None

KS-13367 — 470mmf to 6000mmf

Maximum Recommended DC Working Voltage
300 Volts

List	Tol. ±%	Characteristic	MIL-C-5A Designation
1	5	B	CM30B-J
2	10	B	CM30B-K
3	20	B	CM30B-M
4	2	C	CM30C-G
5	5	C	CM30C-J
6	10	C	CM30C-K
7	2	D	CM30D-G
8	5	D	CM30D-J
9	10	D	CM30D-K
10	2	E	CM30E-G
11	1	D	None
12	1/2	D	None
13	1	E	None
14	1/2	E	None

TCI Library www.telephonecollectors.info

MICA, MOLDED, SCREWS OR PIGTAILS

KS-14228 1500mmf to 5000mmf

Maximum Recommended DC Working Voltage
500 Volts

List	Tol ±%	Character-istic	MIL-C-5A Designation
1	5	B	CM40B-J
2	10	B	CM40B-K
3	20	B	CM40B-M
4	2	C	CM40C-G
5	5	C	CM40C-J
6	10	C	CM40C-K
7	2	D	CM40D-G
8	5	D	CM40D-J
9	10	D	CM40D-K
10	2	E	CM40E-G
11	5	E	CM40E-J

KS-14058 5mmf to 3000mmf

Maximum Recommended DC Working Voltage
500 Volts

List	Capacitance Range, mmf	Tol ±%	Charac-teristic	MIL-C-5A Designation
1	11 to 3000	5	B	CM30B-J
2	6 to 3000	10	B	CM30B-K
3	5 to 3000	20	B	CM30B-M
4	21 to 3000	2	C	CM30C-G
5	20 to 3000	5	C	CM30C-J
6	20 to 3000	10	C	CM30C-K
7	51 to 3000	2	D	CM30D-G
8	51 to 3000	5	D	CM30D-J
9	51 to 3000	10	D	CM30D-K
10	51 to 3000	2	E	CM30E-G
11	51 to 3000	5	E	CM30E-J

KS-13366 5mmf to 1000mmf

Maximum Recommended DC Working Voltage
300 Volts

List	Capacitance Range, mmf	Tol ±%	Charac-teristic	MIL-C-5A Designation
1	11 to 1000	5	B	CM25B-J
2	6 to 1000	10	B	CM25B-K
3	5 to 1000	20	B	CM25B-M
4	21 to 1000	2	C	CM25C-G
5	20 to 1000	5	C	CM25C-J
6	20 to 1000	10	C	CM25C-K
7	51 to 1000	2	D	CM25D-G
8	51 to 1000	5	D	CM25D-J
9	51 to 1000	10	D	CM25D-K
10	51 to 1000	2	E	CM25E-G
11	51 to 1000	1	D	None
12	101 to 1000	1/2	D	None
13	51 to 1000	1	E	None
14	101 to 1000	1/2	E	None

KS-13365 5mmf to 1000mmf

Maximum Recommended DC Working Voltage
300 Volts

List	Capacitance Range, mmf	Tol ±%	Charac-teristic	MIL-C-5A Designation
1	11 to 1000	5	B	CM20B-J
2	6 to 1000	10	B	CM20B-K
3	5 to 1000	20	B	CM20B-M
4	21 to 1000	2	C	CM20C-G
5	20 to 1000	5	C	CM20C-J
6	20 to 1000	10	C	CM20C-K
7	51 to 1000	2	D	CM20D-G
8	51 to 1000	5	D	CM20D-J
9	51 to 1000	10	D	CM20D-K
10	51 to 1000	2	E	CM20E-G
11	51 to 1000	1	D	None
12	101 to 1000	1/2	D	None
13	51 to 1000	1	E	None
14	101 to 1000	1/2	E	None

KS-16115 150mmf to 800mmf

Maximum Recommended DC Working Voltage
300 Volts

List	Capacitance Range, mmf	Tolerance ±%	Charac-teristic
7	150 to 800	2	D
8	150 to 800	5	D
11	150 to 800	1	D
12	150 to 800	1/2	D

KS-16114 25mmf to 510mmf

Maximum Recommended DC Working Voltage

Capacitance Range, mmf	Volts
25 to 400	300
401 to 510	200

List	Capacitance Range, mmf	Tolerance ±%	Charac-teristic
7	25 to 510	2	D
8	25 to 510	5	D
11	50 to 510	1	D
12	100 to 510	1/2	D

TCI Library www.telephonecollectors.info

MICA, MOLDED, SCREWS OR PIGTAILS

KS-14057 5mmf to 510mmf

Maximum Recommended DC Working Voltage
500 Volts

List	Capacitance Range, mmf	Tol ±%	Charac-teristic	MIL-C-5A Designation
1	11 to 510	5	B	CM20B-J
2	6 to 510	10	B	CM20B-K
3	5 to 510	20	B	CM20B-M
4	21 to 510	2	C	CM20C-G
5	20 to 510	5	C	CM20C-J
6	20 to 510	10	C	CM20C-K
7	51 to 510	2	D	CM20D-G
8	51 to 510	5	D	CM20D-J
9	51 to 510	10	D	CM20D-K

KS-14056 2mmf to 510mmf

Maximum Recommended DC Working Voltage

Capacitance Range, mmf	Volts
2 to 430	300
470 to 510	200

List	Capacitance Range, mmf	Tol ±%	Charac-teristic	MIL-C-5A Desig-nation
1	11 to 510	5	B	CM15B-J
2	6 to 510	10	B	CM15B-K
3	2 to 510	20	B	CM15B-M
4	21 to 510	2	C	CM15C-G
5	20 to 510	5	C	CM15C-J
6	20 to 510	10	C	CM15C-K
7	51 to 510	2	D	CM15D-G
8	51 to 510	5	D	CM15D-J
9	51 to 510	10	D	CM15D-K
11	51 to 510	1	D	None
12	101 to 510	1/2	D	None

TCI Library www.telephonecollectors.info

DESCRIPTION

Button type silvered mica capacitors.

Principal Applications: By-pass and tuning capacitors in electronic circuits, where radio frequency currents and voltages are low.

Most of the capacitors are liquid impregnated and resin sealed, and are suitable for operation in the temperature range of -55° to +85°C. Those to which Note 1 applies are either not impregnated or impregnated with silicone, and contain no organic material. They are suitable for operation in the temperature range of -55° to +230°C.

Except for those to which Note 1 applies, the maximum recommended working voltage is 500 dc, and the capacitors are color coded for capacitance, tolerance and characteristic in accordance with the plan described in MIL-C-5A.

For dimensions and details see the specifications!
For "TYPES" see diagram on page 4 of this table.

Letter	CHARACTERISTICS Temperature Coefficient Parts/million/°C	Capacitance Drift
A	Not specified	Not specified
C	-200 to +200	±0.5%
E	-20 to +100	±(0.1% +0.1 mmf)

NOTES

Temperature Range: -55° to +230°C
Maximum Working Voltage: 200 dc.

CAPACITANCES

Spec	List	Cap mmf	Tol ±%	Type	Exception	Maximum Diameter	Char	Remarks
KS-13482	43	6000	10	PA	-	0.661	C	
KS-13482	44	4000	2	MH	-	0.661	C	
KS-13482	27	2000	10	MA	-	0.657	C	
KS-13482	23	2000	10	MB	-	0.657	C	
KS-13482	21	2000	10	MC	-	0.657	C	
KS-9943	96	2000	10	MD	-	0.661	C	
KS-13482	20	2000	10	PA	no tab	0.485	E	
KS-9943	101	1000	20	MA	-	0.463	C	
KS-13482	49	1000	10	MA	-	0.463	C	
KS-13482	65	1000	20	MAH	no tabs	0.463	E	
KS-13482	60	1000	20	MB	-	0.463	C	
KS-13482	61	1000	20	MC	-	0.463	C	
KS-13482	59	1000	20	MC	no tabs	0.463	C	
KS-13482	64	1000	20	ME	-	0.463	E	
KS-13482	66	1000	20	MH	-	0.463	C	
KS-13482	48	1000	10	MH	two side tabs	0.455	C	
KS-13482	56	1000	5	MH	one side tab	0.455	E	
KS-13482	55	1000	20	MH	no tabs	0.463	C	
KS-13482	51	1000	10	MH	no tabs	0.657	E	
KS-13482	57	1000	10	PD	-	0.463	C	
KS-13482	54	1000	10	PD	no tab	0.463	E	
KS-13482	34	1000	20	PF	-	0.463	C	
KS-13482	3	1000	20	PG	no tab	0.463	C	
KS-13482	62	900	20	SJ	-	1/2 flat	E	
KS-9943	87	820	5	MH	one side tab	0.455	E	
KS-9943	86	680	5	MH	one side tab	0.455	E	
KS-9943	107	680	2	MH	one tab	0.463	E	
KS-16053	-	670	10	MH	no tabs	0.657	A	See Note 1
KS-9943	21	670	10	MH	no tabs	0.657	E	

TCI Library www.telephonecollectors.info

MICA, BUTTON TYPE

Spec	List	Cap mmf	Tol ±%	Type	Exception	Maximum Diameter	Char
KS-13482	35	510	10	PD	-	0.463	C
KS-13482	15	500	10	MA	-	0.463	E
KS-13482	25	500	10	MA	no tabs	0.463	E
KS-13482	50	500	10	MAH	no tabs	0.446	E
KS-13482	12	500	10	MB	-	0.463	E
KS-13482	18	500	10	MC	-	0.463	E
KS-13482	1	500	10	MC	no tabs	0.463	E
KS-13482	24	500	10	MD	-	0.463	E
KS-9943	49	500	10	ME	-	0.463	E
KS-9943	84	500	10	MH	two side tabs	0.455	C
KS-9943	73	500	10	MH	one tab	0.463	E
KS-9943	40	500	5	MH	one side tab	0.455	E
KS-9943	80	500	2	MH	one side tab	0.455	E
KS-9943	63	500	20	MH	no tabs	0.463	E
KS-9943	75	500	10	MH	no tabs	0.463	E
KS-13482	28	500	10	PA	no tab	0.463	C
KS-9943	92	500	20	PD	no tab	0.463	E
KS-9943	74	500	10	PD	no tab	0.463	E
KS-13482	42	500	10	PF	-	0.463	C
KS-13482	22	500	10	PF	no tab	0.463	E
KS-9943	94	500	10	PG	-	0.463	E
KS-13482	5	500	20	PG	no tab	0.463	E
KS-13482	4	500	10	PG	no tab	0.463	E
KS-9943	47	500	10	PG	no tab	0.463	E
KS-9943	54	500	20	SJ	-	1/2 flat	E
KS-13482	6	470	10	PG	no tab	0.463	E
KS-9943	69	390	5	MH	one side tab	0.455	E
KS-9943	99	330	5	MH	one side tab	0.455	E
KS-13482	7	330	10	PG	no tab	0.463	E
KS-13482	47	270	10	PD	-	0.463	C
KS-9943	41	200	5	MH	one side tab	0.455	E
KS-9943	79	200	2	MH	one side tab	0.455	E
KS-13482	29	200	5	PA	no tab	0.463	E
KS-9943	64	200	5	PG	no tab	0.463	E
KS-9943	38	150	5	MH	one side tab	0.455	E
KS-9943	108	140	5	MH	one tab	0.463	E
KS-13482	16	100	10	MA	-	0.463	E
KS-13482	52	100	10	MC	-	0.463	E
KS-9943	68	100	5	MH	one side tab	0.455	E
KS-13482	8	100	10	PG	no tab	0.463	E
KS-9943	109	90	2	MH	one tab	0.463	E
KS-9943	36	75	5	MH	one side tab	0.455	E
KS-9943	111	70	2	MH	one tab	0.463	E

TCI Library www.telephonecollectors.info

MICA, BUTTON TYPE

Spec	List	Cap mmf	Tol ±%	Type	Exception	Maximum Diameter	Char
KS-13482	46	68	3	PD	-	0.463	C
KS-13482	45	62	3	PD	-	0.463	C
KS-9943	39	60	5	MH	one side tab	0.455	E
KS-9943	65	56	5	MH	one side tab	0.455	E
KS-9943	95	50	10	MA	-	0.463	C
KS-13482	13	50	10	MB	-	0.463	E
KS-13482	63	50	10	MC	-	0.463	C
KS-13482	58	50	10	MH	no tabs	0.463	C
KS-13482	9	50	10	PG	no tab	0.463	E
KS-13482	41	43	2	PD	-	0.463	C
KS-13482	33	42	5	MA	-	0.463	E
KS-13482	32	42	5	MA	no tabs	0.463	E
KS-9943	67	39	5	MH	one side tab	0.455	E
KS-13482	40	39	2	PD	-	0.463	C
KS-9943	110	35	5	MH	one tab	0.463	E
KS-13482	36	33	2	PD	-	0.463	C
KS-13482	17	30	10	MA	-	0.463	E
KS-13482	26	30	10	MA	no tabs	0.463	C
KS-13482	31	30	10	MA	no tabs	0.463	E
KS-13482	14	30	10	MB	-	0.463	E
KS-13482	19	30	10	MC	-	0.463	E
KS-13482	2	30	10	MC	no tabs	0.463	E
KS-9943	37	30	5	MH	one side tab	0.455	E
KS-13482	30	30	10	PA	no tab	0.463	E
KS-13482	39	30	2	PD	-	0.463	C
KS-13482	10	30	10	PG	no tab	0.463	E
KS-9943	112	25	10	MH	one side tab	0.455	C
KS-13482	11	25	10	PG	no tab	0.463	E
KS-9943	66	20	5	MH	one side tab	0.455	E
KS-13482	37	20	5	PD	-	0.463	C
KS-13482	38	15	5	PD	-	0.463	C
KS-9943	104	15	20	PG	no tab	0.463	E
KS-9943	113	10	20	MH	one side tab	0.455	C

TCI Library www.telephonecollectors.info

TABLE 13.04

MICA, BUTTON TYPE

CASE STYLE → / TERMINAL STYLE ↓		M	P	S
FOR DIMENSIONS AND DETAILS SEE SPECIFICATIONS !		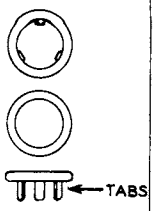	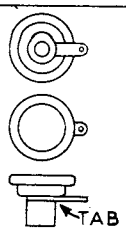	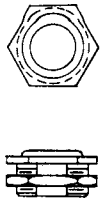
A	SINGLE L ON TOP 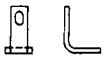			
B	SINGLE L ON BOTTOM 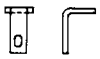			
C	FEED-THRU L 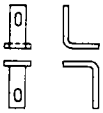			
D	SINGLE U 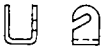			
E	DOUBLE U 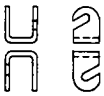			
F	PILLAR			
G	LONG L 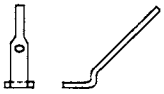			
H	CENTER EYELET 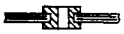			
J	L AND PILLAR 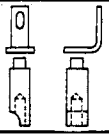			

TCI Library www.telephonecollectors.info

DESCRIPTION

Miscellaneous variable air capacitors, transmitting type. Semicircular plates, straight-line-capacitance variation.

Listed primarily for identification.

Rated NON-PREFERRED because they are highly specialized, of limited application or are relatively expensive. Not recommended for general application.

CAPACITANCES

Designation	List	Min Range mmf Max	Min	Test Volts AC	Dimensions - Inches Length	Width	Height	Remarks
KS-6029	-	1250	45	-	5-5/32	4-1/4	3-3/8	
KS-6404	-	1150	50	-	4-31/32	4-1/4	3-3/8	
KS-7280	-	Nom	160	6350	11-5/8	7-15/32	6-1/4	In dustproof copper box.
KS-7913	-	425	11	1200	5-7/8	4-5/8	3-15/32	
KS-7914	-	625	20	1200	5-7/8	4-5/8	3-9/32	
KS-8088	-	1150	50	500 dc	4-1/2	4-1/4	3-3/8	
KS-8138	-	150	15	500 dc	3-5/16	3-3/16	2-3/32	
KS-8339	-	365	15	1000	5-3/4	5-1/8	6	Balancing capacitor in metal case.
KS-13985	1	110 per set	23	3500	6-31/32	4-1/4	3-3/4	Two sets rotor plates on one shaft. Two sets stator plates.
KS-13985	2	430 per set	44	2000	11-1/32	4-1/4	3-3/4	Two sets rotor plates on one shaft. Two sets stator plates.
KS-13985	3	815 per set	66	2500	14-29/32	4-1/4	3-3/4	Two sets rotor plates on one shaft. Two sets stator plates.
KS-13986	1	460	22	1000	2-29/32	4-1/4	3-3/4	
KS-13986	2	485	38	1500	4-9/16	4-1/4	3-3/4	
KS-13986	3	625	90	2500	12-1/2	4-1/4	3-3/4	
KS-13986	4	725	90	2500	13-5/16	4-1/4	3-3/4	
KS-13987	1	94 per set	29	7000	13-3/16	6-1/4	5-3/8	Two sets rotor plates on one shaft. Two sets stator plates.
KS-14393	1	950	35	1000	4-1/32	4-1/4	3-3/8	
KS-14639	1	450 per set	22	1000	4-3/4	4-1/4	3-3/4	Pair of matched capacitors, common rotor shaft.

TCI Library www.telephonecollectors.info

TCI Library www.telephonecollectors.info

DESCRIPTION

Miscellaneous variable air capacitors.

Listed primarily for identification.

Rated NON-PREFERRED because they are highly specialized, of limited application or are relatively expensive. Not recommended for general application.

CAPACITANCES

Designation	List	Min Range mmf Max	Min	Test Volts AC	Dimensions - Inches Length	Width	Height	Remarks
KS-6017	-	125	each	-	4-1/2	3	4-5/8	Differential, worm drive.
KS-6142	-	125	each	-	3-1/16	6-1/4	6-1/4	Differential.
KS-7732	-	258	-	-	2-3/4	1-25/32	1-25/32	Straight-line-frequency. Has stops.
KS-7902	-	0.5	-	500	3-3/4 incsh	2-3/4	2	Dielectric rotor plate between 2 stator plates
KS-8022	-	50	-	500	1-11/64	1/2	1-9/16	Worm drive.
KS-8129	-	17 each	4	500	1-5/32	15/16	1-15/32	Two rotors, common shaft, two stators.
KS-8391	-	1275	45	1000	5-1/16	4	3-3/8	
KS-8534	-	75	each	500	4-5/8	3	3	Sinusoidal, one rotor, two stators.
KS-8536	-	120-105	each	-	5-1/2	4-3/8	4-7/8	Double differential, rotors 180° apart, shafts insulated.
KS-9866	-	415	15	500	1-29/32	1-15/16	3-3/8	"Midline"
KS-12044	-	446 57 11.7	26 7.5 6.5	-	7-5/8	3-3/32	3-5/32	Worm drive, 3 gang.
KS-13071	-	4.5 each	2.5	500	1	1-5/16	1-3/16	Differential. Has shaft lock.
KS-13219	1,2	11.0 ±0.5	-	-	4-1/32	4	3-3/8	Differential. Gold-plated plates.
KS-13652	-	270	17.5	500	4-3/16	3-3/32	3-5/32	Straight-line-frequency, precision.
KS-13682	-	155 each	16	500	7	5-1/8 incsh	3-1/2	Worm drive, 2-gang, precision.
KS-13683	-	215 each	18	500	7	5-1/8 incsh	3-1/2	Worm drive, 2-gang, precision.
KS-13704	-	214 ±6	24	1000	4-27/32 incsh	3-15/16 incsh	3-5/32	Straight-line-frequency, worm drive, precision.
KS-13772	-	142	6.3	600	2-3/32	1-5/16	1-9/32	
KS-13773	-	52	3.7	600	1-3/8	1-5/16	1-9/32	
KS-13774	-	36	3.2	600	1-15/64	1-5/16	1-9/32	
KS-13831	-	250 each	20	500	11-3/32	3-3/4 incsh	3-5/16	Straight-line-frequency, 5-gang, worm drive.
KS-13996	-	20	3.4	600	1-9/64	1-5/16	1-9/32	
KS-14083	1	139 each	6.7	600	3-31/32	1	1-1/2	Straight-line-capacitance, 2-gang.
KS-14168	1	18.7 each	3	750	1-27/64	5/8	3/4	Miniature differential.
KS-14168	2	4.4 each	1.7	750	61-64	5/8	3/4	Miniature differential.
KS-14168	3	8.0 each	2.0	750	1-1/16	5/8	3/4	Miniature differential.
KS-14494	1	60	8	1000	4-3/16	3-3/32	3-5/32	Straight-line-capacitance, precision.
KS-14502	1	10 each	3	750	1-37/64 incsh	5/8	3/4	Miniature differential.
KS-14503	1	47.5 each	4.3	700	3-13/32 incsh	1-7/16	1-49/64	2-gang.
KS-14503	2	10.6 each	2.8	700	2-23/32	1-7/16	1-49/64	2-gang.
KS-14584	1	49.6	7.6	1000	1-23/32	2-5/16	1-5/16	Straight-line-frequency.
KS-14584	2	335.0 302.5	16.5	1000	3-13/32	2-5/16	1-5/16	Straight-line-frequency.
KS-14621	1	16.5 each	4	500	4-29/32	1-21/32	1-11/16	2-gang, insulated rotor shaft, shield between.

incsh - including shaft

TCI Library www.telephonecollectors.info

TCI Library www.telephonecollectors.info

DATA SHEET **VARIABLE, STRAIGHT LINE CAPACITANCE OR FREQUENCY** **TABLE 14.03**

DESCRIPTION

Variable air capacitors, straight-line capacitance and straight-line-frequency.

Principal Applications: General tuning purposes.

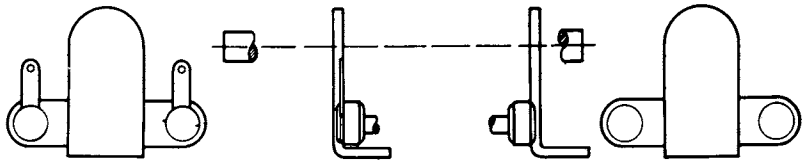

FIG. 2
OTHERWISE SAME AS FIG. 1

CAPACITANCES

STRAIGHT - LINE - CAPACITANCE

Designation	List	Min Range mmf Max	Min	Test Volts AC	Fig	A	C	Pin Stop
KS-13886	3	245	14.5	1000	5	2.313	-	C
KS-13886	1	158 ±4	12.0	1000	2	1.688	1/2	None
KS-13886	4	97.5	9.0	1000	6	1.406	1/2	None
KS-13886	5	97.5	9.0	1000	7	1.406	1/2	None
KS-13886	6	33.0	6.5	1000	6	1.219	1/2	None
KS-8923	-	19.0	6.0	500	9	1.219	1/2	CC
KS-13886	7	18.5	6.0	1000	3	1.219	1/2	C
KS-13886	2	18.5	6.0	1000	4	1.219	1/2	CC
KS-13886	8	9.1	5.5	1000	8	-	-	C

STRAIGHT - LINE - FREQUENCY

Designation	List	Min Range mmf Max	Min	Test Volts AC	Fig	A	C	Pin Stop
KS-9549	-	320	10	500	13	2.688	1/4	C
KS-13313	-	134 ±4	12	500	12	1.594	1/8	None
KS-8222	-	104-101	8.4-6.4	1000	14	0.875	13/16	C
KS-14201	1	47.5	7.3	1000	11	1.219	1-1/8	C

C - Clockwise rotation from minimum to maximum
CC - Counter clockwise

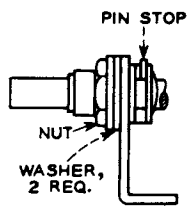

FIG. 3
OTHERWISE SAME AS FIG. 1

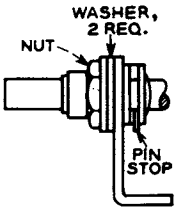

FIG. 4
OTHERWISE SAME AS FIG. 1

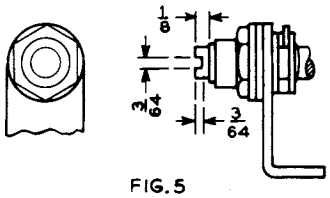

FIG. 5

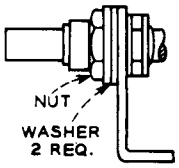

FIG. 6
OTHERWISE SAME AS FIG. 1

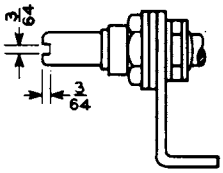

FIG. 7
OTHERWISE SAME AS FIG. 6

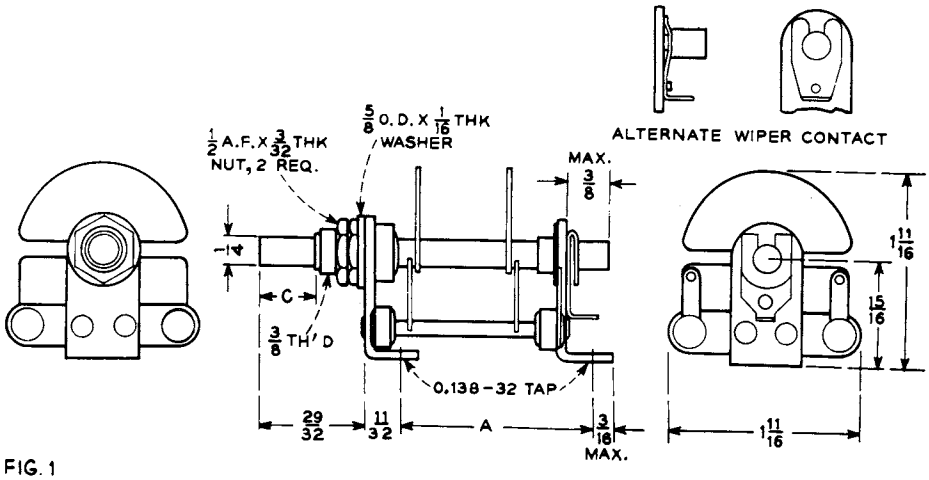

FIG. 1

TCI Library www.telephonecollectors.info

TABLE 14.03

VARIABLE, STRAIGHT LINE CAPACITANCE OR FREQUENCY

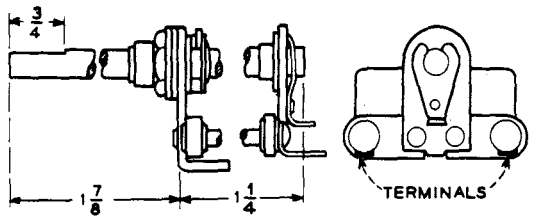

FIG. 8
OTHERWISE SAME AS FIG. 3

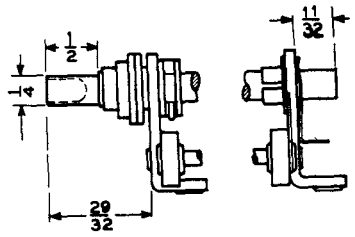

FIG. 9
OTHERWISE SAME AS FIG. 4

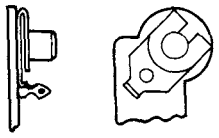

ALTERNATE
WIPER CONTACT

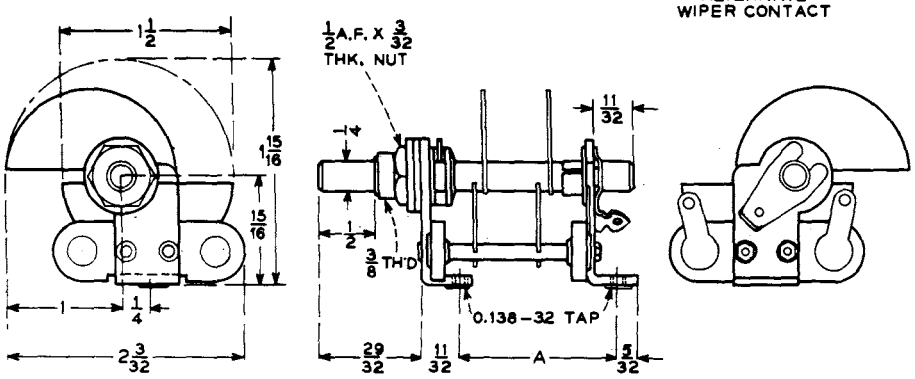

FIG. 10

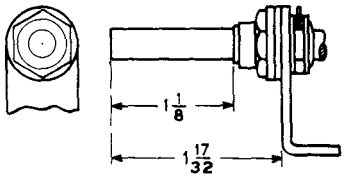

FIG. 11
OTHERWISE SAME AS FIG. 10

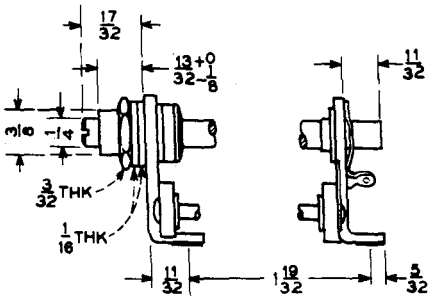

FIG. 12
OTHERWISE SAME AS FIG. 10

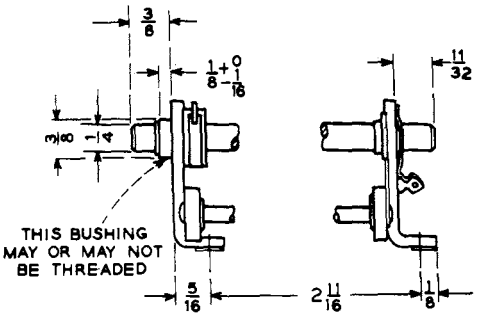

FIG. 13
OTHERWISE SAME AS FIG. 10

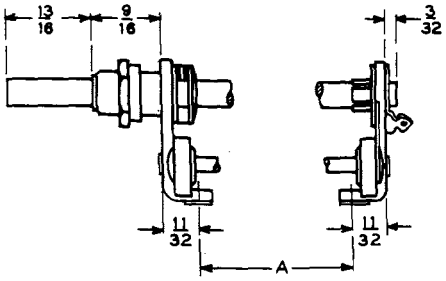

FIG. 14
OTHERWISE SAME AS FIG. 10

TCI Library www.telephonecollectors.info

DATA SHEET **VARIABLE TRIMMERS, AIR** **TABLE 14.04**

DESCRIPTION

Variable air capacitor trimmers
Principal Applications: Filters and networks
Width 15/16, height 1-7/32

CAPACITANCES

Designation	List	Min Range mmf Max	Min	Test Volts AC	Fig	Rotor Terminal Position	A	B	Remarks
KS-13846	3	139	9.0	500	4	X	3/32	1-7/32	
KS-8362		135	9.0	500	9	Z	3/32	1-7/32	
KS-8432		135	9.0	500	12	-	3/32	1-7/32	
KS-8415		99	7.5	500	11	Z	11/32	29/32	
KS-8417		99	7.5	500	9	Z	3/32	29/32	Nickel plate on mounting nuts.
KS-7678		99	7.5	500	5	Z	3/32	29/32	
KS-13846	4	99	7.0	500	4	X	3/32	59/64	
KS-13846	5	75	6.0	500	4	X	3/32	11/16	
KS-8382		75	6.0	500	9	Z	3/32	3/4	
KS-8065		75	6.0	500	8	-	11/32	3/4	
KS-7755		75	5.0	500	12	-	3/32	-	
KS-8555		70	7.5	1000	7	Z	3/32	1-13/32	
KS-7891		50	7.5	1000	7	Z	3/32	1	
KS-13846	6	50	5.3	500	4	X	3/32	1/2	
KS-8431		49	5.0	500	12	-	3/32	17/32	
KS-8064		45	5.0	500	8	-	11/32	1/2	
KS-13846	1	32	4.5	500	2	Z	3/32	3/8	
KS-7758		31	4.5	500	5	Z	3/32	3/8	
KS-7550		31	4.5	500	6	-	1/16	3/8	
KS-13070		31	4.5	500	17	Z	3/32	-	Shaft lock
KS-8364		23	4.5	1000	10	-	3/32	17/32	
KS-8197		23	4.5	1000	17	Z	3/32	17/32	Shaft lock
KS-8159		23	4.0	500	1	Z	3/32	5/16	
KS-13846	7	23	4.0	500	4	X	3/32	21/64	
KS-13832	1	18±2	4.0	500	1	OMIT	1/8	1/4	Rotor terminal connected to mounting nuts.
KS-7757		17	4.0	500	5	Z	3/32	1/4	
KS-13846	8	16	3.8	500	4	X	3/32	17/64	
KS-8553		15	4.5	1000	7	Z	3/32	7/16	
KS-8436		9.5	4.0	1000	1	Z	3/32	9/32	
KS-13846	2	9.5	4.0	1000	3	Z	3/32	9/32	
KS-8216		8.5	3.5	1000	16	Z	3/32	1/4	Adjustable circular rotor plate.
KS-7892		7.5	4.0	1000	7	Z	3/32	1/4	
KS-13312		0.7	0.35	500	15	Z	3/32	-	
KS-9281		0.7	0.35	500	14	Z	3/32	-	

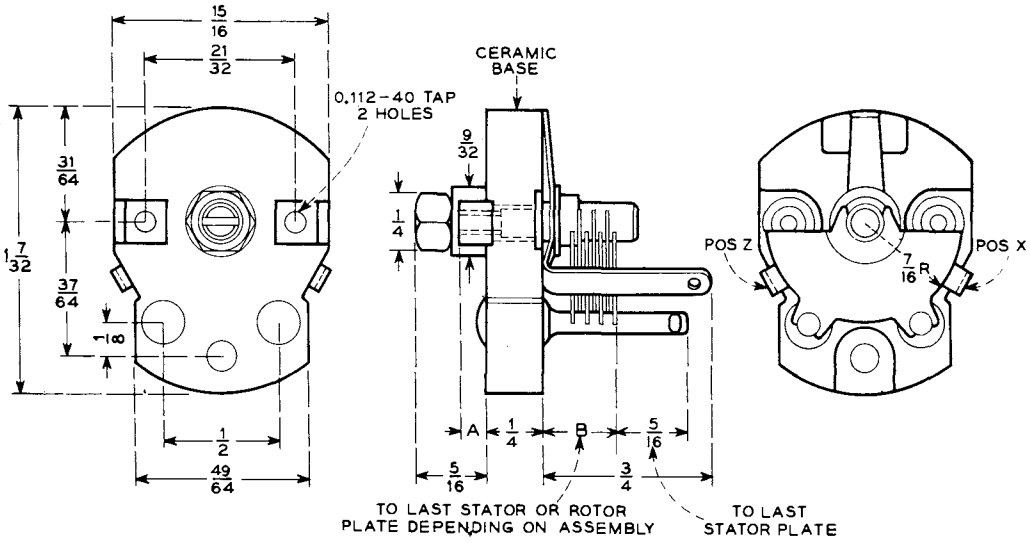

FIG. 1

TCI Library www.telephonecollectors.info

TABLE 14.04

VARIABLE TRIMMERS, AIR

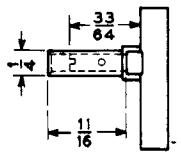

FIG. 2

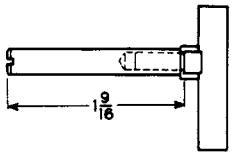

FIG. 3

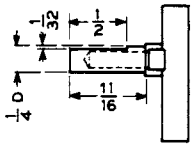

FIG. 4

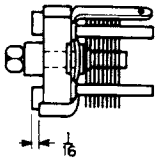

FIG. 5

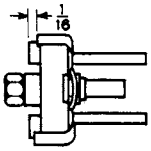

FIG. 6

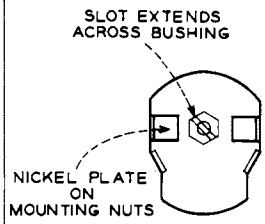

FIG. 7 OTHERWISE SAME AS FIG. 5

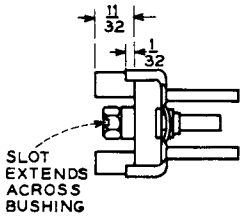

FIG. 8

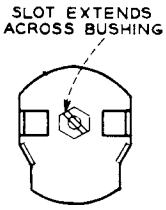

FIG. 9

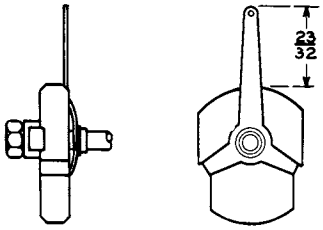

FIG. 10

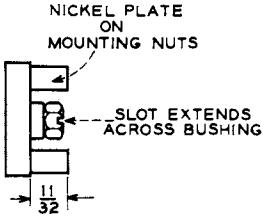

FIG. 11

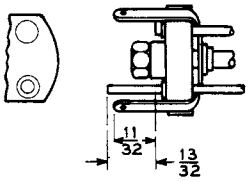

FIG. 12

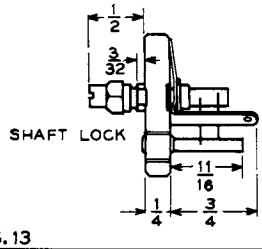

FIG. 13

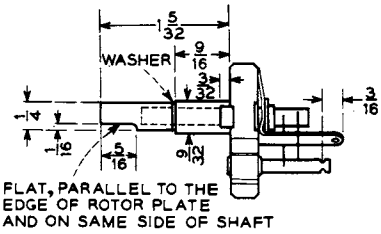

FIG. 14

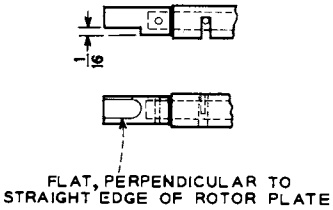

FIG. 15 OTHERWISE SAME AS FIG. 14

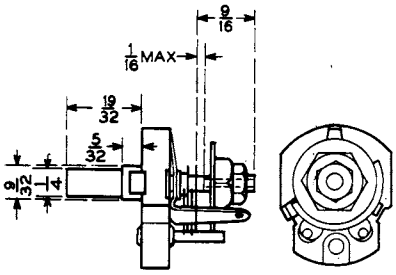

FIG. 16

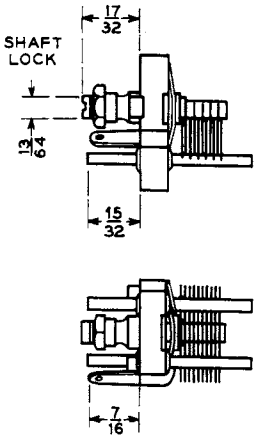

FIG. 17

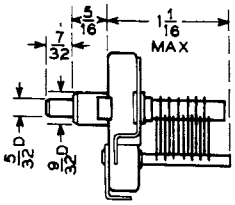

FIG. 18

NOTE: FIGURES 2 THROUGH 18 ARE OTHERWISE SAME AS FIGURE 1 EXCEPT AS NOTED

TCI Library www.telephonecollectors.info

DESCRIPTION

Variable air capacitor trimmers
Principal Applications: Filters and networks
Width 25/32, height 15/16

CAPACITANCES

Designation	List	Min Range mmf Max	Min Range mmf Min	Test Volts AC	Fig	Rotor Terminal Position	A	B
KS-13998	15	99	5.0	600	2	Z	3/32	1-5/64
KS-13998	1	51	3.6	800	2	Z	3/32	53/64
KS-13998	10	49	3.2	600	2	Z	3/32	37/64
KS-13998	13	49	3.2	600	2	X	3/32	37/64
KS-13998	5	34.5	3.1	800	3	-	3/32	19/32
KS-13998	6	34.5	3.1	800	2	Z	11/32	19/32
KS-13998	8	34.5	3.1	800	2	Z	3/32	19/32
KS-13998	9	34.5	3.1	800	2	X	15/32	19/32
KS-13998	4	26	2.7	800	2	X	3/32	15/32
KS-13998	7	26	2.7	800	1	Z	3/32	15/32
KS-13998	2	15.5	2.4	800	2	X	3/32	11/32
KS-13998	3	15.5	2.4	800	2	Z	3/32	11/32
KS-13998	11	15.5	2.4	800	1	Z	3/32	11/32
KS-13998	12	15.5	2.4	800	4	-	3/32	11/32
KS-13998	14	15.5	2.4	800	5	X	3/32	11/32
KS-14122	-	15.5	2.4	800	6	X	3/32	11/32

Rotor terminal connected to mounting studs.

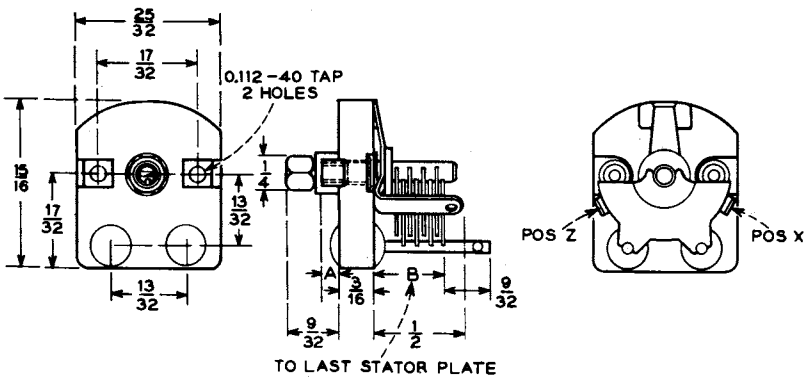

FIG. 1

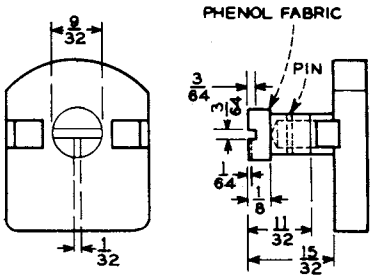

FIG. 2
OTHERWISE SAME AS FIG. 1

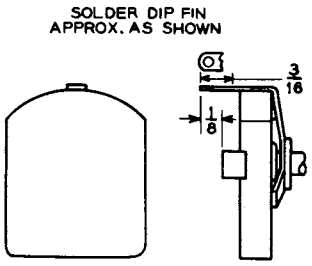

FIG. 3
OTHERWISE SAME AS FIG. 2

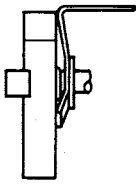

FIG. 4
OTHERWISE SAME AS FIG. 1

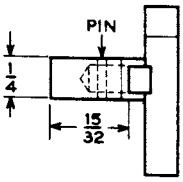

FIG. 5
OTHERWISE SAME AS FIG. 1

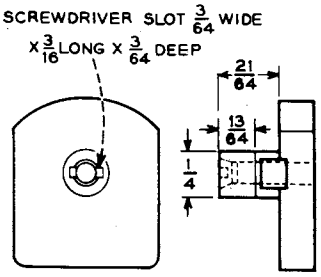

FIG. 6
OTHERWISE SAME AS FIG. 1

TCI Library www.telephonecollectors.info

TCI Library www.telephonecollectors.info

DESCRIPTION

Miniature variable air capacitor trimmers
Principal Applications: Filters and networks
Width 5/8, height 3/4

CAPACITANCES

Designation	List	Min Range mmf Max	Min Range mmf Min	Test Volts AC	Fig	Rotor Terminal Position	A	B	C
KS-14008	5	18.7	3.0	750	1	X	59/64	5/32	1-37/64
KS-14008	2	13.3	2.6	750	1	X	3/4	5/32	1-13/32
KS-14008	4	13.3	2.6	750	1	Z	3/4	5/32	1-13/32
KS-14008	1	8.1	2.2	750	2	X	3/4	11/32	1-7/32
KS-14008	3	8.1	2.2	750	2	Z	3/4	11/32	1-7/32
KS-14008	6	4.5	1.8	750	1	X	29/64	5/32	1-7/64
KS-14008	7	4.5	1.8	750	2	X	3/4	15/32	1-7/64

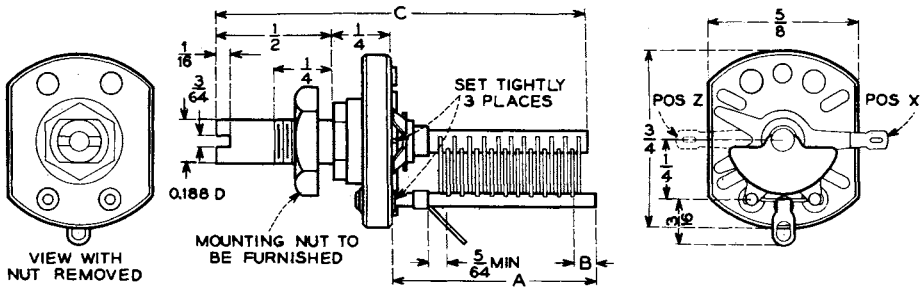

FIG. 1

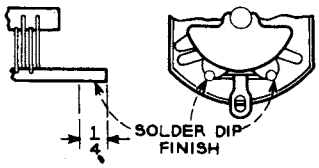

FIG. 2
OTHERWISE SAME AS FIG. 1

TCI Library www.telephonecollectors.info

TCI Library www.telephonecollectors.info

DESCRIPTION

Variable ceramic trimmers.

Operating Temperature Range: -55° to +85°C

Principal Application: Tuning capacitors in circuits where high frequency currents and voltages are low.

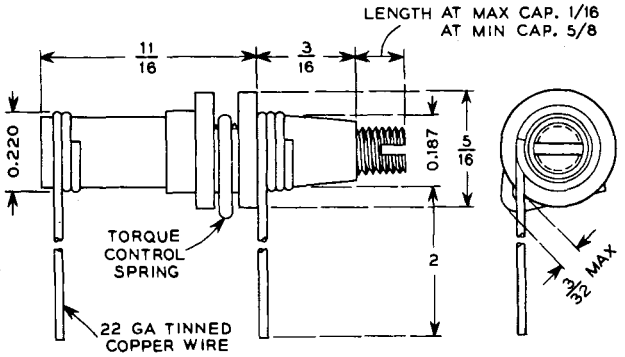

FIG. 1

CAPACITANCES

KS	List	Min Cap Range mmf	Working DC Volts	Temperature Coefficient Parts/million/°C	Fig
				±200	
13613	-	0.7 to 3.5	300	-	1
14195	1	7 to 45	500	N500*	4
	2	3 to 12		NPO*	3
	3	5 to 20		NPO*	3
14620	1	0.7 to 3.0	300	-	2

*N500 - Negative 500
NPO - Negative and positive are both zero

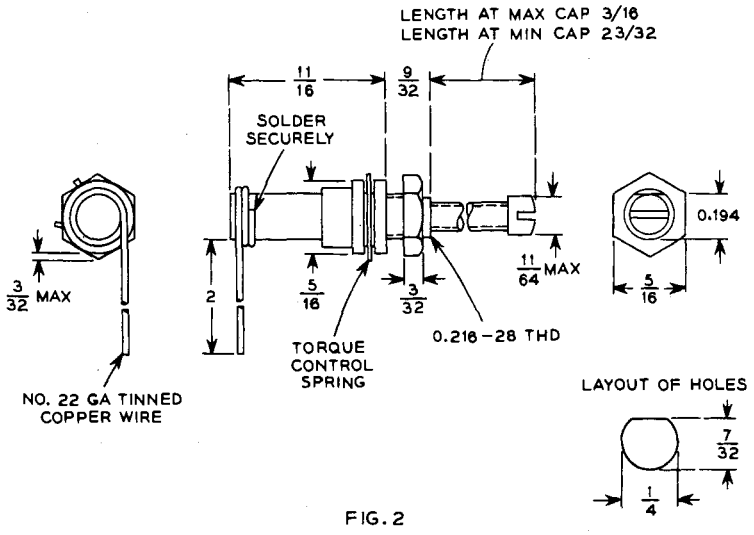

FIG. 2

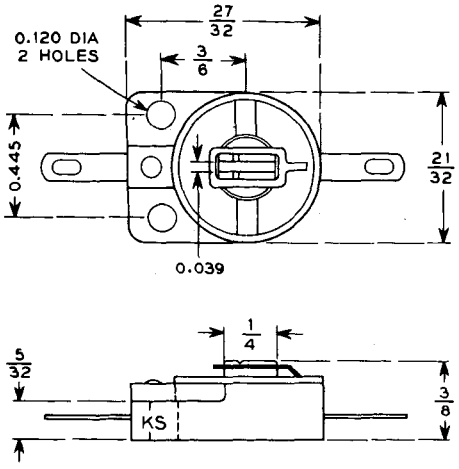

FIG. 3

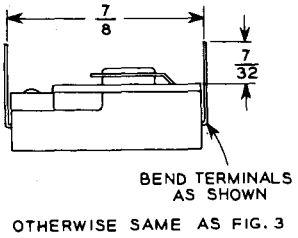

OTHERWISE SAME AS FIG. 3

FIG. 4

TCI Library www.telephonecollectors.info

TCI Library www.telephonecollectors.info

DESCRIPTION

Aluminum electrolytic capacitors, sealed in aluminum cans with molded phenolic covers. Polarized except as noted.

Principal Applications: Blocking, filtering, coupling and by-passing capacitors in radio equipment, repeaters, rectifiers and amplifiers.

Negative terminal grounded to can through electrolyte.

NOTES

1. Finishes are as follows:
   F - Gray Lacquer
   G - Gray Polyprene, Insulating

CAPACITANCES

SINGLE SECTION CAPACITORS

Designation	Rating MF	Rating DC Volts	Working Temp Range °C		Max Ripple Volts Rms	Max Ripple Freq Cps	Wdg Diag Fig.	Size Fig.	Length "A"	Finish Note 1	Remarks
KS-13997	7500	50	-20	+65	0.7	120	10	5	5-3/8	G	
KS-13688	6000	5	-20	+65	0.3	120	16	3	4-3/4	F	
KS-14698	5000	60	-20	+65	1.0	120	10	5	5-3/8	G	
KS-14124	3500	100	-20	+65	0.4	120	16	5	5-3/8	G	
KS-14329	2000	30	-20	+65	0.85	120	10	3	4-3/4	F	
KS-14626	2000	15	-20	+65	1.0	120	10	3	3-1/2	F	
KS-13687	2000	10	-20	+65	0.7	120	16	3	3	F	
KS-14715	1700	200	-20	+65	1.0	120	10	5	5-3/8	G	
KS-13309	1000	90	0	+65	0.60	120	16	5	5-3/8	G	
KS-14330	1000	50	-20	+65	1.0	120	10	3	4	F	
KS-13918	1000	25	-20	+65	1.5	120	10	3	3	G	
KS-13762	500	200	-20	+65	1.2	120	16	5	5-3/8	G	
KS-14136	500	60	-20	+65	0.55	120	10	3	3-1/2	G	
KS-14092	500	60	-20	+65	0.55	120	10	4	3-1/2	F	
KS-13993	400	350	0	+65	1.3	120	16	5	5-3/8	G	
KS-14587	400	150	-20	+65	0.4	120	10	3	4-3/4	G	
KS-14633	350	150	-20	+65	1.2	120	16	3	4-3/4	F	
KS-13811	250	25	-20	+65	0.3	1000	10	2	1-1/2	F	
KS-14954	200	250	-20	+65	1.5	120	10	3	4	None	
KS-13761	200	250	-20	+65	1.5	120	10	3	4	G	
KS-13584	200	100	-30	+65	2.0	120	10	2	4	G	
KS-13686	125	400	-20	+65	2.4	120	16	3	4-3/4	G	
KS-13810	125	350	-20	+65	2.4	120	16	3	3-1/2	G	
KS-14105	125	60	-20	+65	5.0	120	10	3	3-1/2	G	
KS-13917	100	200	-20	+65	3.0	120	10	3	2-1/2	G	
KS-14630	100	25	-20	+65	3.0	120	10	2	1-1/2	G	
KS-13486	60	25	0	+65	10	20	10	1	4	G	Non-polarized
KS-13628	50	60	0	+65	5.5	120	10	2	3-1/2	F	
KS-13541	50	60	0	+65	5.5	120	10	1	3-1/2	G	
KS-14237	25	150	-20	+65	4.0	120	10	2	1-1/2	None	Gray cardboard tube cover.
KS-13994	25	25	-20	+65	6.0	120	10	2	1-1/2	F	
	20	250	-40	+85	5.0	120	10	2	2-1/2	F	
KS-14616	20	250	-20	+65	5.0	120	10	2	1-1/2	F	
KS-14780	10	400	-20	+65	7.0	120	10	2	1-1/2	G	
KS-13874	10	400	0	+65	12.0	120	10	2	3-1/2	G	
KS-13629	10	400	0	+65	12.0	120	10	2	3-1/2	F	
KS-13995	10	50	-20	+65	10.0	120	10	2	1-1/2	F	

TCI Library www.telephonecollectors.info

ELECTROLYTIC, ALUMINUM, 1-3 SECTIONS

DOUBLE SECTION CAPACITORS

Designation	Rating MF	Rating DC Volts	Working Temp Range °C	Max Ripple Volts Rms	Max Ripple Freq Cps	Max Ripple	Wdg Diag Fig	Size Fig.	Length "A"	Finish Note 1
KS-14632	100 100	300 300	-20 +65	3.0 2.0	120 120	one comb	17	8	4-3/4	F
KS-13540	100 100	200 200	-30 +65	4.0 3.0	60 60	one comb	12	9	3-1/2	None
KS-14202	100 100	200 200	-20 +65	2.3 1.6	120 120	one comb	11	8	4	F
KS-13974	25 25	450 450	-20 +65	5.0 4.0	120 120	one comb	11	8	3	G
KS-13873	25 25	200 200	-20 +65	6.0 4.0	120 120	one comb	11	8	2	G
KS-14205	20 20	450 450	-20 +65	6.0 4.0	120 120	one comb	12	9	2-1/2	G
KS-13812	5 5	300 300	-20 +65	20.0 15.0	120 120	one comb	11	8	2	G

NOTES

1. Finishes as follows:
   F - Gray Lacquer
   G - Gray Polyprene, Insulating

TRIPLE SECTION CAPACITORS

Designation	Rating MF	Rating DC Volts	Working Temp Range °C	Max Ripple Volts Rms	Max Ripple Freq Cps	Max Ripple	Wdg Diag Fig	Size Fig.	Length "A"	Finish Note 1	Remarks
KS-14488	200 100 30	100 100 100	-20 +65	3.0 0.5	120 120	200 comb	15	8	3-1/2	F	
KS-14966	100 100 125	100 100 50	-20 +65	4.5 0.3	120 120	100 comb	15	8	3	F	
KS-14967	100 100 75	50 50 25	-20 +65	4.0 0.5	120 120	100 comb	15	8	2	F	
KS-13485	75 75 50	200 200 25	-30 +65	8.0	60	one	14	9	3-1/2	None	
KS-13975	50 50 50	200 200 200	-20 +65	5.0 3.0	120 120	one comb	15	8	3-1/2	G	
KS-14091	50 25 10	200 200 200	-20 +65	4.0 7.5 13.0	120 120 120	any one sep	15	8	3	None	Gray cardboard tube cover.
KS-14093	25 25 25	150 150 150	-20 +65	10.0 6.0	120 120	one comb	15	8	4	None	
KS-14009	25 25 10	200 200 200	-20 +65	6.5 6.5 11.5	120 120 120	any one sep	15	8	2-1/2	G	
KS-14236	20 20 20	400 400 25	-20 +65	4.0	120	one	15	8	3	None	Gray cardboard tube cover
KS-13685	10 10 10	400 400 400	-20 +65	20.0 12.0	120 120	one comb	18	8	2-1/2	None	

TCI Library www.telephonecollectors.info

ELECTROLYTIC, ALUMINUM, 1-3 SECTIONS

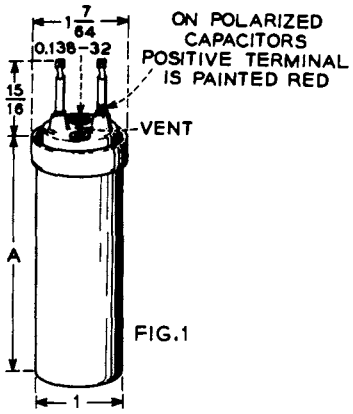

FIG. 1

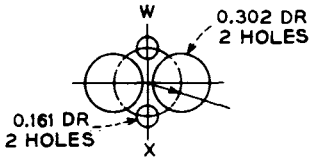

HOLES DRILLED

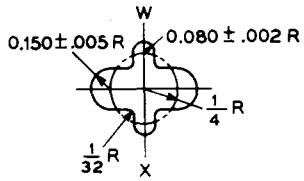

HOLES PERFORATED

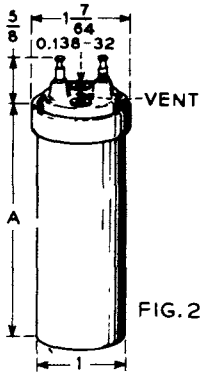

FIG. 2

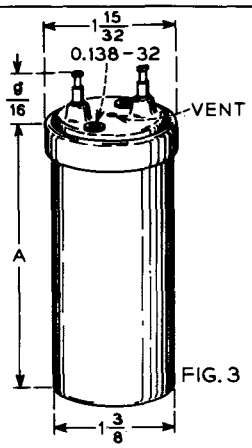

FIG. 3

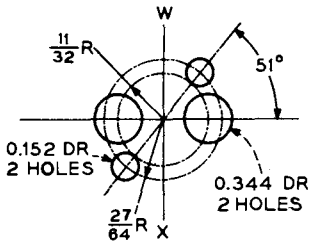

HOLES DRILLED

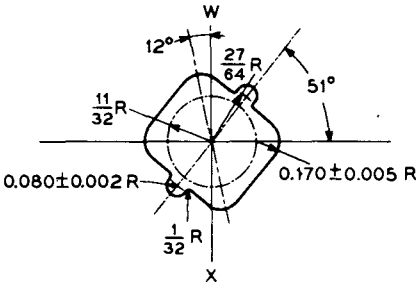

HOLES PERFORATED

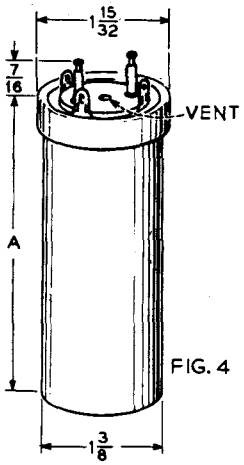

FIG. 4

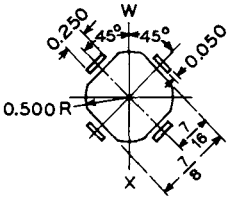

FOR DIRECT MOUNTING

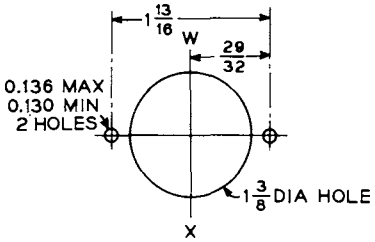

FOR USE WITH STANDARD PHENOL FIBER OR METAL MOUNTING PLATES.
PLATES FURNISHED ONLY WHEN SPECIFIED IN ORDER

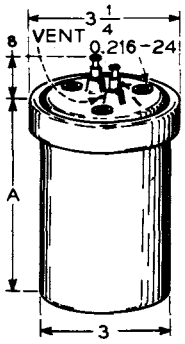

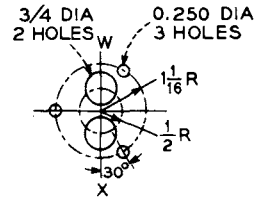

LAYOUT OF HOLES

APPARATUS SIDE SHOWN

W-X IS VERTICAL CENTER LINE UNLESS OTHERWISE SPECIFIED

FIG. 5

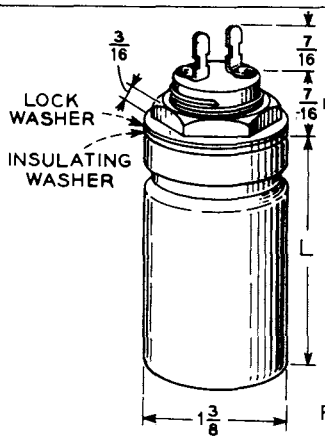

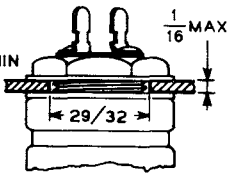

METHOD OF MOUNTING

FIG. 6

TCI Library www.telephonecollectors.info

ELECTROLYTIC, ALUMINUM, 1-3 SECTIONS

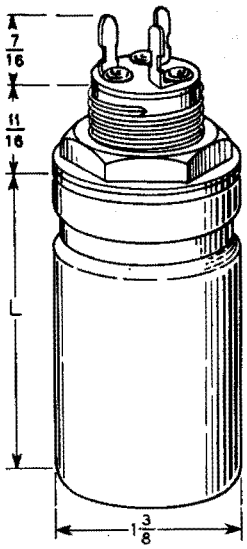

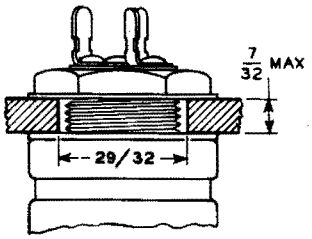

METHOD OF MOUNTING

FIG. 7

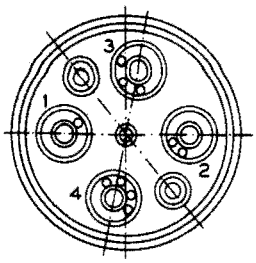

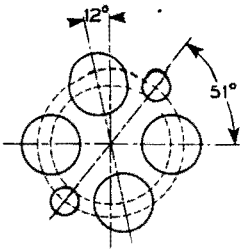

HOLES DRILLED

OTHERWISE SAME AS FIG. 3
FIG. 8

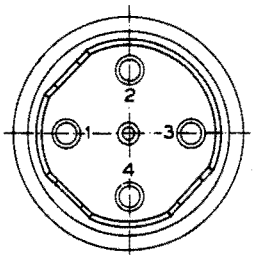

OTHERWISE SAME AS FIG. 4
FIG. 9

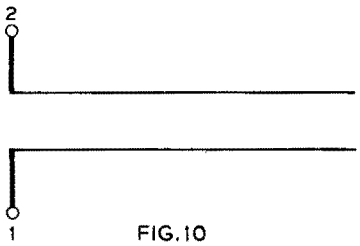

FIG. 10

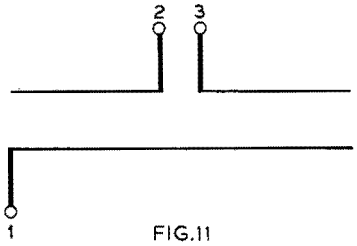

FIG. 11

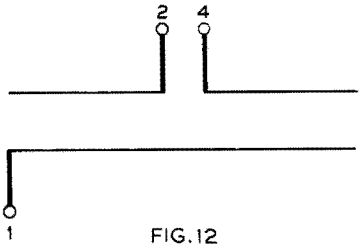

FIG. 12

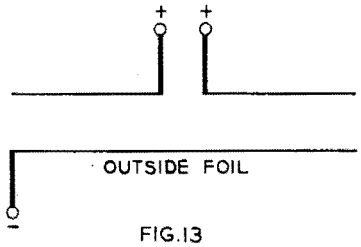

FIG. 13

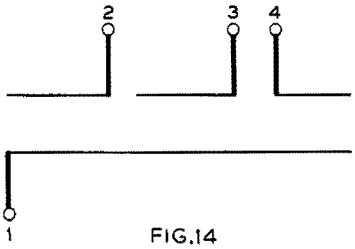

FIG. 14

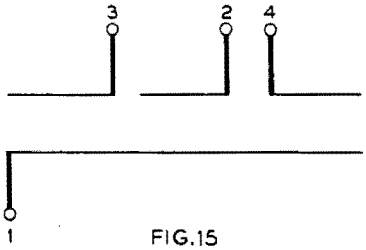

FIG. 15

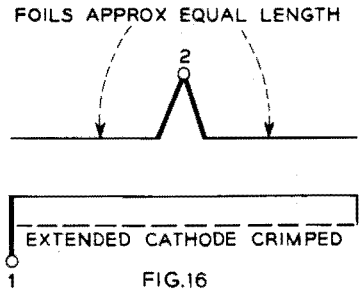

FIG. 16

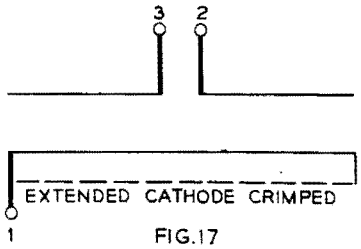

FIG. 17

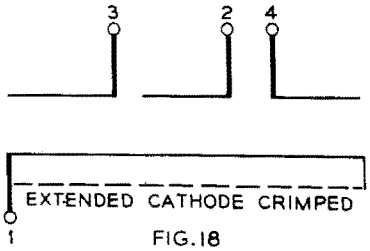

FIG. 18

TCI Library www.telephonecollectors.info

DATA SHEET **ELECTROLYTIC, TANTALUM** **TABLE 15.02**

DESCRIPTION

Tantalum electrolytic capacitors in metal enclosures which may or may not be insulated by plastic tubing.

Principal Applications: Filters and Networks

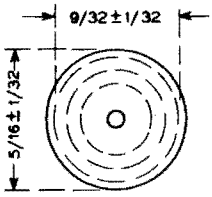

CAPACITANCES

Spec	Rating Mf	Rating DC Volts	Operating Temperature Range °C		Ripple Ma or Volts	Ripple Freq Cps	Type	Insu-lation	Polarized
KS-14504	50	60	0	+65	2v	120	Porous	None	Pol
KS-14505	25	60	0	+65	-	-	Porous	*	Non-Pol
KS-14477	25	8	0	+60	30ma	120	Porous	None	Pol
KS-14337	4	60	0	+60	30ma	120	Porous	None	Pol
KS-14338	1	150	0	60	20ma	120	Foil	None	Non-Pol
KS-14355	1	150	0	+60	15ma	120	Foil	None	Pol

* Two KS-14504 in metal can, 1-25/64 X 41/64 X 2-9/32 high. Two flexible leads with spade tips. Insulated from can.

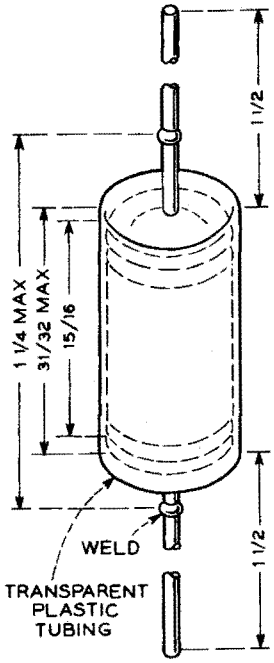

FOIL TYPE

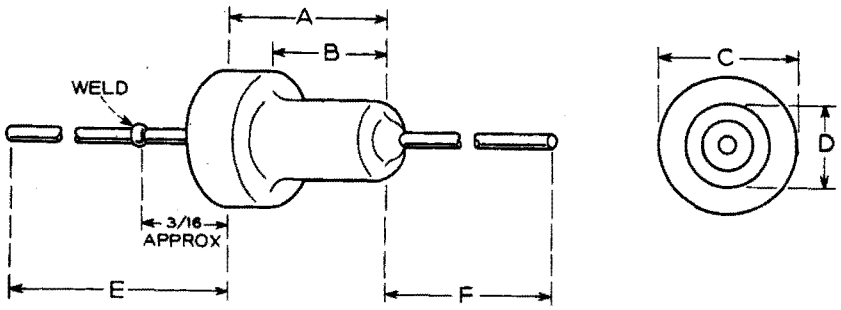

POROUS TYPE

APPROXIMATE DIMENSIONS

Specification	A	B	C	D	E	F
KS-14504	49/64	19/32	37/64	3/8	2-7/16	2-1/4
KS-14477, 14337	15/32	11/32	5/16	7/32	1-1/2	1-1/2

TCI Library www.telephonecollectors.info

TCI Library www.telephonecollectors.info

DATA SHEET **CERAMIC TUBULAR, NON-INSULATED, PIGTAILS** **TABLE 16.01**

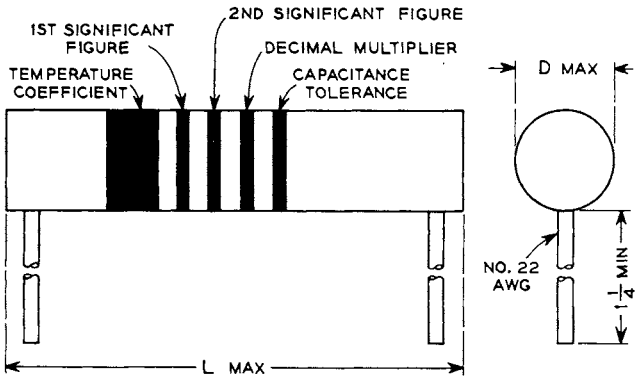

DESCRIPTION

Non-insulated tubular ceramic capacitors.

Operating Temperature Range: -55° to +85°C

Suitable for use under tropical humidity conditions.

Maximum recommended dc operating voltage = 300.

Capacitance values specified should be in decamultiples of "PREFERRED NUMBERS" listed elsewhere in this bulletin.

When specifying, state KS and List numbers, and nominal value of capacitance.

CAPACITANCES

HI-K TYPE

Spec	Capacitance Range mmf	List	Tol ±%	JAN	D	L
KS-14065	12,000 to 15,000	1 2	10 20	CC45	0.416	2.000
KS-14064	7500 to 11,000	1 2	10 20	-	0.415	1.600
KS-14063	4300 to 6800	1 2	10 20	-	0.330	1.250
KS-14062	1500 to 3900	1 2	10 20	-	0.315	0.937
KS-14119	271 to 710	1 2	10 20	CC20	0.200	0.400

List	Temperature Coefficient Parts/million/°C	Tol ±%	See Note	Capacitance Range, mmf KS-14113	KS-14114	KS-14115	KS-14116	KS-13481
JAN D L				CC20 0.200 0.400	CC25 0.200 0.656	CC30 0.240 0.460	CC32 0.250 0.860	CC45 0.415 2.000
1	+100 ±60	2	1,4	0.5 to 10	10 to 43	0.5 to 47	22 to 120	165 to 212
2	0 ±60	2	1,4	0.5 to 10	15 to 43	0.5 to 47	24 to 120	309 to 400
3	-30 ±60	2	1,4	0.5 to 18	15 to 43	0.5 to 47	27 to 120	318 to 420
4	-80 ±60	2	1,4	0.5 to 24	15 to 43	0.5 to 51	30 to 120	369 to 480
5	-330 ±60	2	1,4	0.5 to 30	22 to 62	0.5 to 75	51 to 120	511 to 665
6	-750 ±120	2	1,4	0.75 to 51	43 to 110	0.75 to 130	110 to 360	841 to 1100
7	+100 ±60	5	2,4	0.75 to 18	10 to 43	0.75 to 47	22 to 120	165 to 212
8	0 ±60	5	2,4	0.75 to 18	12 to 43	0.75 to 47	24 to 120	309 to 400
9	-30 ±60	5	2,4	0.75 to 18	15 to 43	0.75 to 47	27 to 120	318 to 420
10	-80 ±60	5	2,4	0.75 to 24	15 to 43	0.75 to 51	30 to 120	369 to 480
11	-330 ±60	5	2,4	0.75 to 30	22 to 62	0.75 to 75	51 to 120	511 to 665
12	-750 ±120	5	2,4	0.75 to 51	43 to 110	0.75 to 130	110 to 360	841 to 1100
13	0 ±30	2						309 to 400
14	-30 ±30	2					51 to 120	318 to 420
15	-80 ±30	2					51 to 120	369 to 480
16	0 ±30	5						309 to 400
17	-30 ±30	5					51 to 120	318 to 420
18	-80 ±30	5					51 to 120	369 to 480
19	0 ±60	1	3,4	0.5 to 18	15 to 43	0.5 to 47	24 to 120	309 to 400
20	-30 ±60	1	3,4	0.5 to 18	15 to 43	0.5 to 47	27 to 120	318 to 420
21	-80 ±60	1	3,4	0.5 to 24	15 to 43	0.5 to 51	30 to 120	369 to 480
22	0 ±30	1						309 to 400
23	-30 ±30	1					51 to 120	318 to 420
24	-80 ±30	1					51 to 120	369 to 480

NOTE 1 Closest tolerance for Lists 1 to 6 is ±0.25 mmf.

NOTE 2 Closest tolerance for Lists 7 to 12 is ±0.5 mmf.

NOTE 3 Closest tolerance for Lists 19 to 21 is ±0.1 mmf.

NOTE 4 Values of tolerance on temperature coefficients for low values of capacitance are as follows:

Cap, mmf	0.5 to 2	2 to 3	3 to 4	4 to 10
All except -750	±250	±120	±120	±60
-750	±250	±250	±120	±120

TCI Library www.telephonecollectors.info

TABLE 16.01 **CERAMIC TUBULAR, NON-INSULATED, PIGTAILS**

KS-14055 CC35 D = 0.315 L = 1.165

List	Temperature Coefficient Parts/million/°C	Tol ±%	Cap Range mmf KS-14055
1	+100 ±60	2	68 to 200
2	0 ±60	2	82 to 200
3	-30 ±60	2	82 to 200
4	-80 ±60	2	91 to 200
5	-150 ±60	2	100 to 220
6	-330 ±60	2	150 to 300
7	-750 ±120	2	360 to 510
8	+100 ±60	5	68 to 200
9	0 ±60	5	82 to 200
10	-30 ±60	5	82 to 200
11	-80 ±60	5	91 to 200
12	-150 ±60	5	100 to 220
13	-330 ±60	5	150 to 300
14	-750 ±120	5	360 to 510
15	0 ±30	2	82 to 200
16	-30 ±30	2	82 to 200
17	-80 ±30	2	91 to 200
18	0 ±30	5	82 to 200
19	-30 ±30	5	82 to 200
20	-80 ±30	5	91 to 200

TCI Library www.telephonecollectors.info

DESCRIPTION

Disc type ceramic capacitors. Hi-K type.

Operating Temperature Range: -55° to +85°C

Suitable for use under tropical humidity conditions.

Maximum recommended dc operating voltage = 300.

All KS-16048 capacitors are subjected to a life test of 100 hours at room temperature, on 750 volts dc, prior to inspection.

When specifying, state the specification and list numbers.

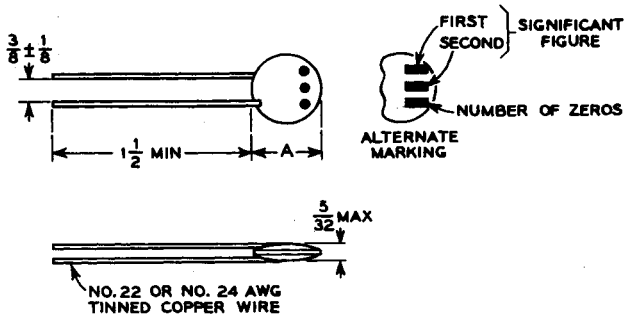

CAPACITANCES

Spec	List	Cap mmf	Tol %	A
KS-14148	4	10,000	-20	19/32
KS-14149	2	10,000	-0	3/4
KS-16048	4	10,000	-20	19/32
KS-14148	2	5,000	-0	19/32
KS-16048	2	5,000	-0	19/32
KS-14148	3	4,000	-0	19/32
KS-16048	3	4,000	-0	19/32
KS-14148	1	1,500	-0	19/32
KS-16048	1	1,500	-0	19/32

TCI Library www.telephonecollectors.info

TCI Library www.telephonecollectors.info

DATA SHEET **CERAMIC TUBULAR, INSULATED, PIGTAILS** **TABLE 16.04**

DESCRIPTION

Insulated tubular ceramic capacitors.

Operating Temperature Range: -55° to +85°C

Suitable for use under tropical humidity conditions.

Maximum recommended dc operating voltage = 300.

Capacitance values specified should be in decamultiples of "PREFERRED NUMBERS" listed elsewhere in this bulletin.

When specifying, state KS and List numbers, and nominal value of capacitance.

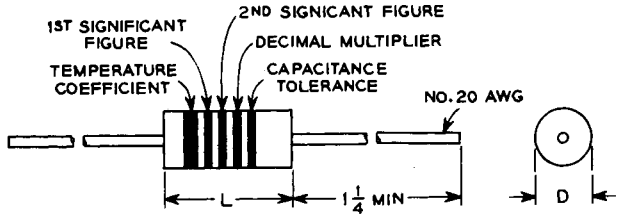

CAPACITANCES

H1-K TYPE

Spec	Capacitance Range mmf	List	Tol ±%	JAN	Fig	D	L
KS-14061	1501 to 3900	1 2	10 20	CC36	1	0.340	1.328
KS-14060	601 to 1500	1 2	10 20	CC26	1	0.250	0.812
KS-14059	270 to 710	1 2	10 20	CC21	1	0.250	0.562

TEMPERATURE COMPENSATING TYPE

KS-13477, 13478, 13479

List	Temperature Coefficient Parts/million/°C	Tol ±%	See Note	KS-13477	KS-13478	KS-13479
JAN Fig D L				CC21 1 0.250 0.562	CC26 1 0.250 0.812	CC36 1 0.340 1.328
1	+100 ±60	2	1,4	0.75 to 12	13 to 21	23 to 69
2	0 ±60	2	1,4	0.75 to 22	23 to 39	40 to 130
3	-30 ±60	2	1,4	0.75 to 23	24 to 40	41 to 133
4	-80 ±60	2	1,4	0.75 to 27	28 to 47	48 to 155
5	-330 ±60	2	1,4	0.75 to 37	38 to 65	66 to 215
6	-750 ±120	2	1,4	1.5 to 62	63 to 110	111 to 360
7	+100 ±60	5	2,4	0.75 to 12	13 to 21	23 to 69
8	0 ±60	5	2,4	0.75 to 22	23 to 39	40 to 130
9	-30 ±60	5	2,4	0.75 to 23	24 to 40	41 to 133
10	-80 ±60	5	2,4	0.75 to 27	28 to 47	48 to 155
11	-330 ±60	5	2,4	0.75 to 37	38 to 65	66 to 215
12	-750 ±120	5	2,4	1.5 to 62	63 to 110	111 to 360
13	0 ±30	2	1			48 to 130
14	-30 ±30	2	1			48 to 133
15	-80 ±30	2	1			48 to 155
16	0 ±30	5	2			48 to 130
17	-30 ±30	5	2			48 to 133
18	-80 ±30	5	2			48 to 155
19	0 ±30	1	3,4	0.75 to 22	23 to 39	40 to 130
20	-30 ±30	1	3,4	0.75 to 23	24 to 40	41 to 133
21	-80 ±30	1	3,4	0.75 to 27	28 to 47	48 to 155
22	0 ±30	1				48 to 130
23	-30 ±30	1				48 to 133
24	-80 ±30	1				48 to 155

NOTE 1 Closest tolerance for Lists 1 to 6 is ±0.25 mmf.

NOTE 2 Closest tolerance for Lists 7 to 12 is ±0.5 mmf.

NOTE 3 Closest tolerance for Lists 19 to 21 is ±0.1 mmf.

NOTE 4 Values of tolerance on temperature coefficients for low values of capacitance are as follows:

Cap, mmf	0.5 to 2	2 to 3	3 to 4	4 to 10
All except -750	±250	±120	±120	±60
-750	±250	±250	±120	±120

TCI Library www.telephonecollectors.info

TABLE 16.04 **CERAMIC TUBULAR, INSULATED, PIGTAILS**

KS-14526 Capacitance Range: 0.75 to 10 mmf

Tolerance ±0.1 mmf, CC21, Fig. 1, D = 0.250, L = 0.562

Temperature Coefficient in Parts/million/°C

List	0.75 to 1.0	1 to 2	2 to 3	3 to 4	4 to 10
1	+100	±250	+100	±120	+100 ±60
2	0	±250	0	±120	0 ±60
3	-30	±250	-30	±120	-30 ±60
4	-80	±250	-80	±120	-80 ±60
5	-330	±250	-330	±120	-330 ±60
6		-750	±250	-750	±120

TCI Library www.telephonecollectors.info

DESCRIPTION

Feed through type ceramic capacitors.

For Bell System and non-government applications.

Maximum recommended dc operating voltage = 300.

Operating Temperature Range: -55° to +85°C

Capacitance values specified should be in multiples of "PREFERRED NUMBERS" listed elsewhere in this bulletin.

NOTE: Wherever possible use the KS-14622 type. It is more ruggedly constructed than the other types of feed-through capacitors.

CAPACITANCES

KS-14050 to 14052

Temperature Compensating Type Dielectric
Tolerance: ±10%

KS	Capacitance Range mmf	Fig
14050	5, 11 to 75	1
14051	5, 11 to 75	2
14052	7, 15 to 100	3

State KS number and nominal capacitance value.

KS-14066 to 14068 Hi-K

List 1 Tolerance ±10%
List 2 Tolerance ±20%

KS	Capacitance Range mmf	Fig
14066	500 to 1000	1
14067	500 to 1000	2
14068	500 to 1500	3

State KS and List numbers, and nominal capacitance value.

KS-14622 Hi-K

List	Cap mmf	Tol	Fig
1	470	±20	4
2	680	±20	4
3	1000	±20	4
4	2500	+100 -0	4
5	100	±20	4

State KS and List numbers.

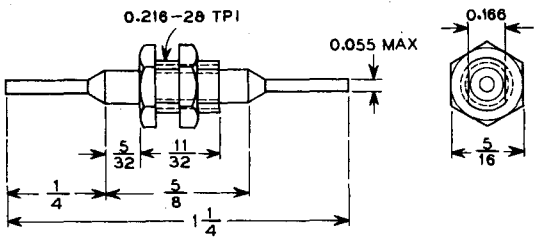

FIG. 1

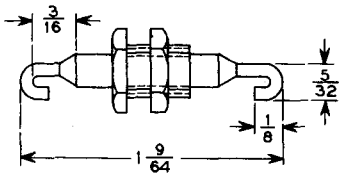

SAME AS FIG.1 EXCEPT AS SHOWN

FIG. 2

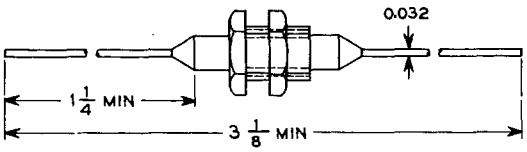

SAME AS FIG.1 EXCEPT AS SHOWN

FIG. 3

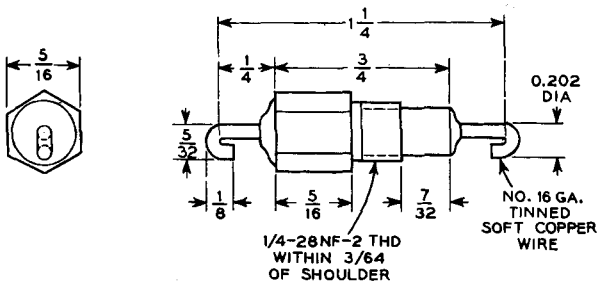

FIG. 4

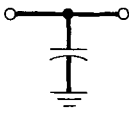

TCI Library www.telephonecollectors.info

TCI Library www.telephonecollectors.info

DESCRIPTION

Stand-off type ceramic capacitors.

Operating Temperature Range: -55° to +85°C

Suitable for use under tropical humidity conditions.

Maximum recommended dc operating voltage = 300.

Capacitance values specified should be in decamultiples of "PREFERRED NUMBERS" listed elsewhere in this bulletin.

When specifying, state specification and list numbers, and nominal value of capacitance, except as noted.

CAPACITANCES

H1-K TYPE

Spec	Capacitance Range mmf	List	Tol ±%	Fig
KS-14069	500 to 1000	1 2	10 20	1
KS-14070	500 to 1000	1 2	10 20	2
KS-14120	270 to 700	1 2	10 20	3

Spec	List	Cap mmf	Tolerance	Fig
KS-14612	3	680	±20%	6
KS-14612 KS-14612	2 1	470 330	±20% ±20%	6 6
KS-14787 KS-52460	1 3	100 15	±10% ±10%	4 5

When specifying the above, state only specification and list numbers.

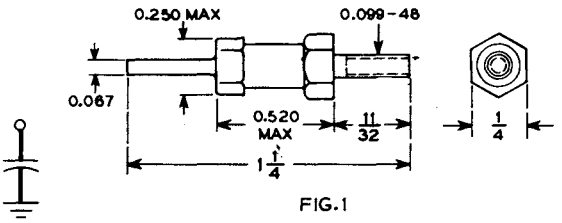

FIG.1

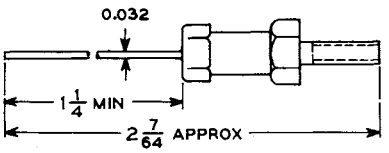

SAME AS FIG.1 EXCEPT AS SHOWN

FIG.2

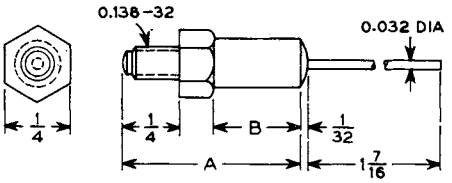

FIG.3

KS	A	B
14120	13/16	3/8
14411	13/16	3/8
14412	1-1/16	5/8

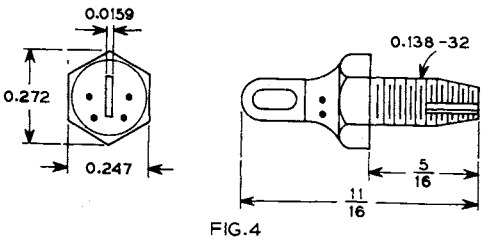

FIG.4

TCI Library www.telephonecollectors.info

TABLE 16.06.

CERAMIC STAND-OFF, THREADED

TEMPERATURE COMPENSATING TYPE

KS-14053 Fig. 1 Tolerance ±10%

KS-14054 Fig. 2 Tolerance ±10%

List	Capacitance Range mmf	Temperature Coefficient
		Parts/million/°C
1	2 to 19	+100 ±60
2	2 to 27	0 ±60
3	2 to 30	-30 ±60
4	2 to 43	-80 ±60
5	2 to 60	-330 ±60
6	2 to 90	-750 ±120

NOTE: Tolerance on temperature coefficient for the above capacitors from 2 to 3.0 mmf shall be ±120 parts/million/°C for all temperature coefficient values except -750 which shall have a tolerance of ±250. The tolerance for capacitors from 3.0 to 4.0 mmf shall be ±120 for all values of temperature coefficient.

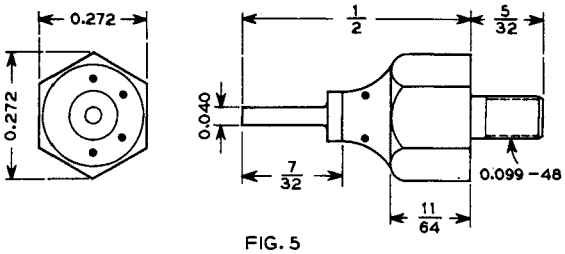

FIG. 5

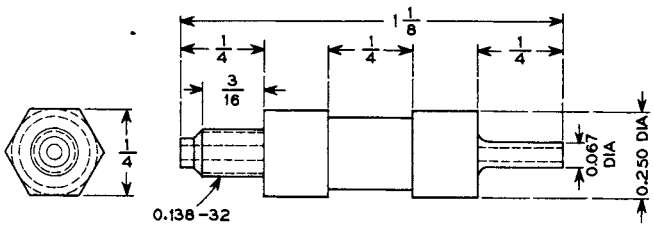

FIG. 6

KS-14411, 14412 Fig. 3

List	Temperature Coefficient	Tol ±%	See Note	Capacitance Range, mmf KS-14411	KS-14412
	Parts/million/°C				
1	+100 ±60	2	1,3	0.5 to 10	10 to 22
2	0 ±60	2	1,3	0.5 to 18	15 to 36
3	-30 ±60	2	1,3	0.5 to 18	15 to 36
4	-80 ±60	2	1,3	0.5 to 20	15 to 43
5	-330 ±60	2	1,3	0.5 to 30	20 to 62
6	-750 ±120	2	1,3	0.75 to 51	43 to 110
7	+100 ±60	5	2,3	0.75 to 12	10 to 22
8	0 ±60	5	2,3	0.75 to 18	12 to 36
9	-30 ±60	5	2,3	0.75 to 18	15 to 36
10	-80 ±60	5	2,3	0.75 to 20	15 to 43
11	-330 ±60	5	2,3	0.75 to 30	20 to 62
12	-750 ±120	5	2,3	0.75 to 51	43 to 110
13	0 ±30	2	-	10 to 18	12 to 36
14	-30 ±30	2	-	10 to 18	15 to 36
15	-80 ±30	2	-	10 to 20	15 to 43
16	0 ±30	5	-	10 to 18	12 to 36
17	-30 ±30	5	-	10 to 18	15 to 36
18	-80 ±30	5	-	10 to 20	15 to 43

NOTE 1. Closest tolerance for Lists 1 to 6 is ±0.25 mmf

NOTE 2. Closest tolerance for Lists 7 to 12 is ±0.5 mmf

NOTE 3. Values of tolerance on temperature coefficients for low values of capacitance are as follows:

Cap, mmf	0.5 to 2	2 to 3	3 to 4	4 to 10
All except -750	±250	±120	±120	±60
-750	±250	±250	±120	±120

TCI Library www.telephonecollectors.info

DESCRIPTION

Paired insulated tubular ceramic capacitors.

Each pair consists of two capacitors, as indicated below, matched to 0.1 mmf at some frequency between 100 kc and 1 mc, and packed together in a container.

Principal application: Filters.

KS-13764 Capacitance Range 0.5 to 10 mmf

Two capacitors, each of which is KS-13477 List 2, of the same value of capacitance.

When specifying, state KS number and nominal value of capacitance.

CAPACITANCES

KS-14623

KS-14623 List No.	Capacitance Range mmf	Each Capacitor of Pair
1	0.5 to 18	KS-13477, L1
2	0.5 to 18	KS-13477, L2
3	0.5 to 18	KS-13477, L3
4	0.5 to 20	KS-13477, L4
5	0.5 to 30	KS-13477, L5
6	0.5 to 51	KS-13477, L6

When specifying, state KS number, List number and nominal value of capacitance.

TCI Library www.telephonecollectors.info

TCI Library www.telephonecollectors.info

DESCRIPTION

Significant figures of capacitance values should be specified in terms of the preferred numbers, listed in the tables, corresponding to the desired tolerances.

Capacitance values should be limited, insofar as possible, to the preferred numbers because of manufacturing economies.

In case need arises for values other than these the CAPACITOR DEVELOPMENT GROUP of the Laboratories should be consulted.

±1/2% ± 1 %	± 2 %
100	100
101	-
102	102
104	-
105	105
106	-
107	107
109	-
110	110
111	-
113	113
114	-
115	115
117	-
118	118
120	-
121	121
123	-
124	124
126	-
127	127
129	-
130	130
132	-
133	133
135	-
137	137
138	-
140	140
142	-
143	143
145	-

±1/2% ± 1 %	± 2 %
147	147
149	-
150	150
152	-
154	154
156	-
158	158
160	-
162	162
164	-
165	165
167	-
169	169
172	-
174	174
176	-
178	178
180	-
182	182
184	-
187	187
189	-
191	191
193	-
196	196
198	-
200	200
203	-
205	205
208	-
210	210
213	-

±1/2% ± 1 %	± 2 %
215	215
218	-
221	221
223	-
226	226
229	-
232	232
234	-
237	237
240	-
243	243
246	-
249	249
252	-
255	255
258	-
261	261
264	-
267	267
271	-
274	274
277	-
280	280
284	-
287	287
291	-
294	294
298	-
301	301
305	-
309	309
312	-

±1/2% ± 1 %	± 2 %
316	316
320	-
324	324
328	-
332	332
336	-
340	340
344	-
348	348
352	-
357	357
361	-
365	365
370	-
374	374
379	-
383	383
388	-
392	392
397	-
402	402
407	-
412	412
417	-
422	422
427	-
432	432
437	-
442	442
448	-
453	453
459	-

±1/2% ± 1 %	± 2 %
464	464
470	-
475	475
481	-
487	487
493	-
499	499
505	-
511	511
517	-
523	523
530	-
536	536
542	-
549	549
556	-
562	562
569	-
576	576
583	-
590	590
597	-
604	604
612	-
619	619
626	-
634	634
642	-
649	649
657	-
665	665
673	-

±1/2% ± 1 %	± 2 %
681	681
690	-
698	698
706	-
715	715
723	-
732	732
741	-
750	750
759	-
768	768
777	-
787	787
796	-
806	806
816	-
825	825
835	-
845	845
856	-
866	866
876	-
887	887
898	-
909	909
920	-
931	931
942	-
953	953
965	-
976	976
988	-

RMA PREFERRED NUMBER SYSTEM

±5%	±10%	±20%
10	10	10
11	-	-
12	12	-
13	-	-
15	15	15
16	-	-
18	18	-
20	-	-
22	22	22
24	-	-
27	27	-
30	-	-

±5%	±10%	±20%
33	33	33
36	-	-
39	39	-
43	-	-
47	47	47
51	-	-
56	56	-
62	-	-
68	68	68
75	-	-
82	82	-
91	-	-

TCI Library www.telephonecollectors.info

TCI Library www.telephonecollectors.info

INDEX BY KS NUMBERS

KS	Table
6017	14.02
6029	14.01
6142	14.02
6404	14.01
7280	14.01
7550	14.04
7732	14.02
7755	14.04
7757	14.04
7758	14.04
7878	14.04
7891	14.04
7892	14.04
7902	14.02
7913	14.01
7914	14.01
8022	14.02
8064	14.04
8065	14.04
8088	14.01
8129	14.02
8138	14.01
8159	14.04
8197	14.04
8216	14.04
8222	14.03
8339	14.01
8362	14.04
8364	14.04
8382	14.04
8391	14.02
8415	14.04
8416	14.04
8431	14.04
8432	14.04
8436	14.04
8534	14.02
8536	14.02
8553	14.04
8555	14.04
8923	14.03
9281	14.04
9549	14.03
9866	14.02
9943	13.04
12044	14.02
13070	14.04
13071	14.02
13074	11.03
13075	11.03
13157	11.03
13189	11.03
13219	14.02
13309	15.01
13312	14.04
13313	14.03
13365 to 13369	13.02
13370 to 13384	11.07
13390 to 13439	11.15
13440 to 13451	11.10
13452 to 13456	11.11
13458 to 13465	11.07
13466 to 13473	11.10
13474 to 13476	11.11
13477 to 13479	16.04
13481	16.01
13482	13.04
13485	15.01
13486	15.01
13499	11.01

KS	Table
13513	13.02
13515	13.02
13533 to 13538	13.01
13540	15.01
13541	15.01
13547 to 13558	11.02
13584	15.01
13613	14.07
13614	11.13
13616 to 13620	11.05
13628	15.01
13652	14.02
13661 to 13668	11.06
13669	11.09
13682	14.02
13683	14.02
13685 to 13688	15.01
13704	14.02
13751	13.02
13752	13.02
13761	15.01
13762	15.01
13764	16.07
13772 to 13774	14.02
13807	11.12
13810 to 13812	15.01
13814	11.09
13815	11.09
13831	14.02
13832	14.04
13846	14.04
13849	11.13
13873	15.01
13874	15.01
13886	14.03
13888	11.01
13889	11.01
13917	15.01
13918	15.01
13967	11.01
13974	15.01
13975	15.01
13982	11.03
13985 to 13987	14.01
13993 to 13995	15.01
13996	14.02
13997	15.01
13998	14.05
14008	14.06
14009	15.01
14050 to 14052	16.05
14053	16.06
14054	16.06
14055	16.01
14056 to 14058	13.02
14059 to 14061	16.04
14062 to 14065	16.01
14066 to 14068	16.05
14069	16.06
14070	16.06
14071	11.01
14072	11.01
14081	11.09
14083	14.02
14091 to 14093	15.01
14105	15.01
14113 to 14116	16.01
14119	16.01
14120	16.06
14122	14.05

KS	Table
14124	15.01
14136	15.01
14138 to 14144	11.14
14148	16.02
14149	16.02
14168	14.02
14179	11.03
14195	14.07
14201	14.03
14202	15.01
14205	15.01
14228	13.02
14236	15.01
14237	15.01
14251	13.02
14258	11.03
14289	11.09
14290	11.09
14325	11.01
14326	11.01
14329	15.01
14330	15.01
14337	15.02
14348	11.16
14358	11.01
14393	14.01
14411	16.06
14412	16.06
14420	11.09
14433	11.01
14477	15.02
14488	15.01
14494	14.02
14502	14.02
14503	14.02
14504	15.02
14526	16.04
14536	11.03
14570	11.08
14571	11.08
14584	14.02
14587	15.01
14612	16.06
14616	15.01
14620	14.07
14621	14.02
14622	16.05
14623	16.07
14626	15.01
14630	15.01
14632	15.01
14633	15.01
14639	14.01
14658	11.12
14659	11.12
14660	11.08
14698	15.01
14715	15.01
14733	11.08
14755	11.08
14780	15.01
14787	16.06
14954	15.01
14966	15.01
14967	15.01
14980	11.08
14981	11.08
16048	16.02
16053	13.04

TCI Library www.telephonecollectors.info

TCI Library www.telephonecollectors.info