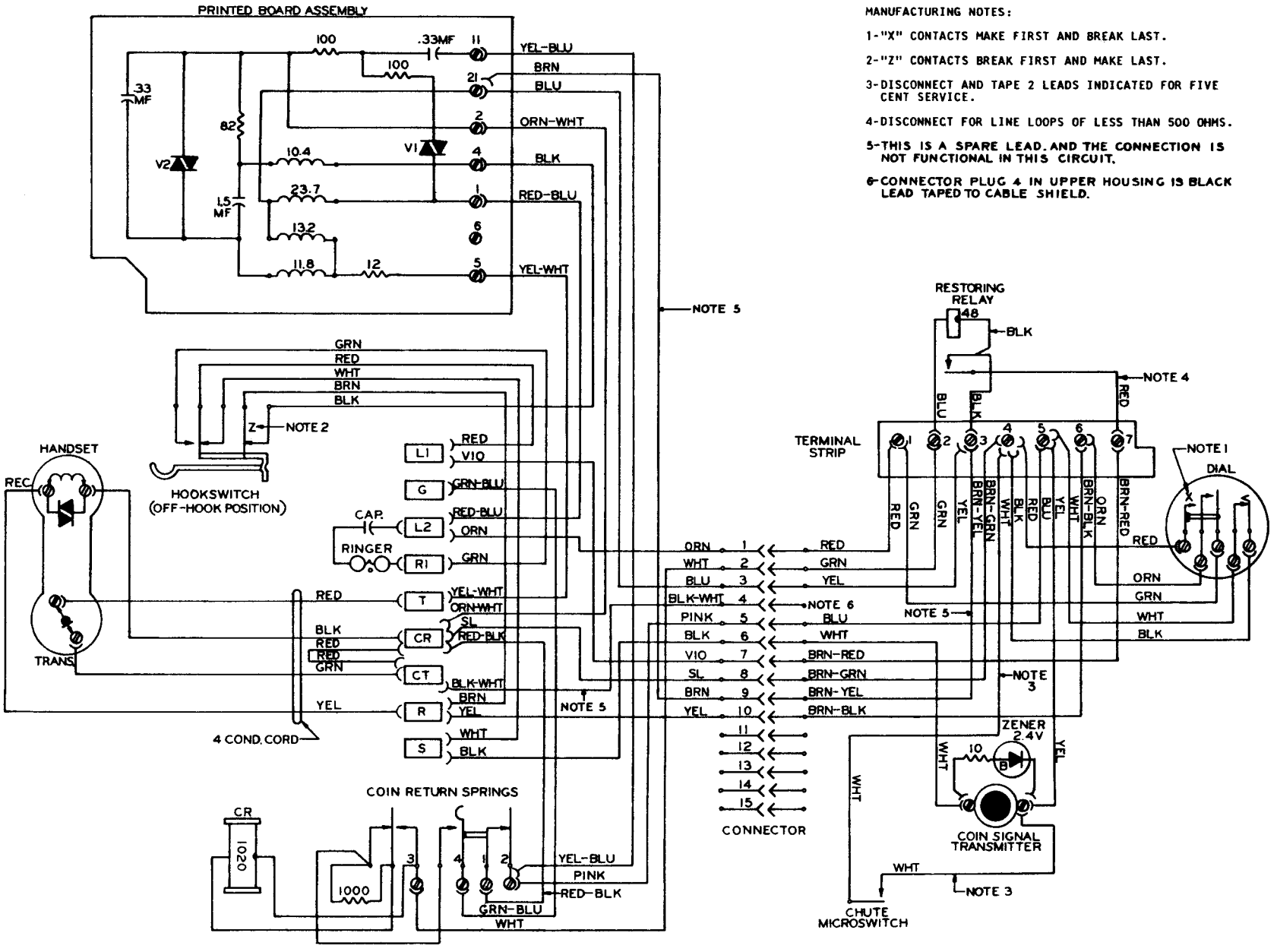


Wiring Diagram, LPC82-55 Coin Telephone Set.