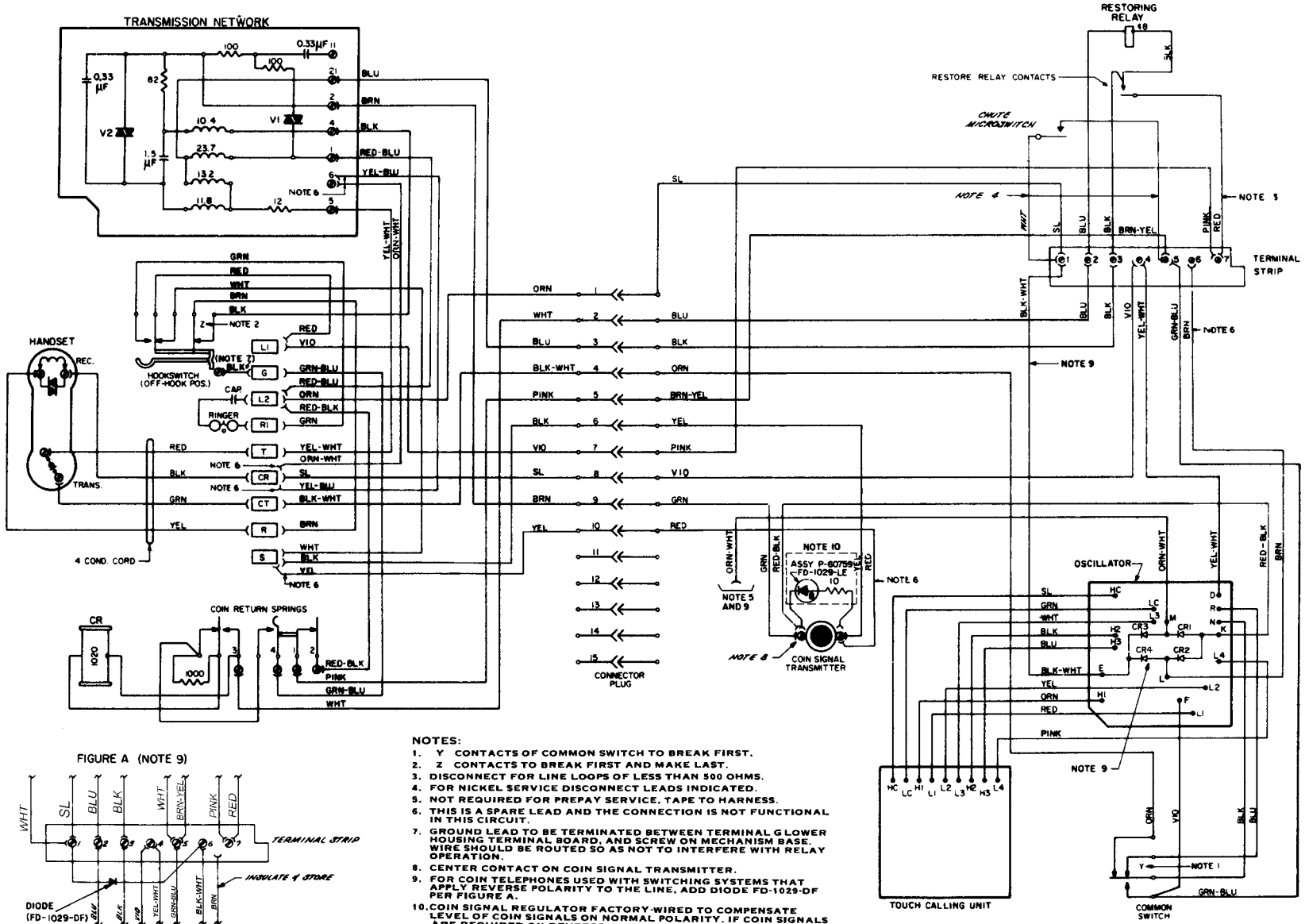

FIGURE A (NOTE 9)

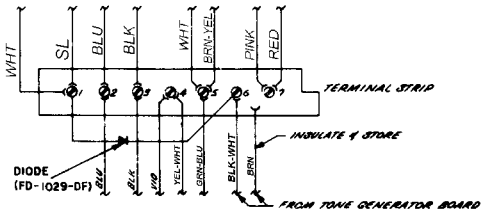

NOTES:

1. Y CONTACTS OF COMMON SWITCH TO BREAK FIRST.
2. Z CONTACTS TO BREAK FIRST AND MAKE LAST.
3. DISCONNECT FOR LINE LOOPS OF LESS THAN 500 OHMS.
4. FOR NICKEL SERVICE DISCONNECT LEADS INDICATED.
5. NOT REQUIRED FOR PREPAY SERVICE, TAPE TO HARNESS.
6. THIS IS A SPARE LEAD AND THE CONNECTION IS NOT FUNCTIONAL IN THIS CIRCUIT.
7. GROUND LEAD TO BE TERMINATED BETWEEN TERMINAL G LOWER HOUSING TERMINAL BOARD, AND SCREW ON MECHANISM BASE. WIRE SHOULD BE ROUTED SO AS NOT TO INTERFERE WITH RELAY OPERATION.
8. CENTER CONTACT ON COIN SIGNAL TRANSMITTER.
9. FOR COIN TELEPHONES USED WITH SWITCHING SYSTEMS THAT APPLY REVERSE POLARITY TO THE LINE, ADD DIODE FD-1029-DF PER FIGURE A.
10. COIN SIGNAL REGULATOR FACTORY-WIRED TO COMPENSATE LEVEL OF COIN SIGNALS ON NORMAL POLARITY. IF COIN SIGNALS ARE REQUIRED ON REVERSE POLARITY INSTEAD, REVERSE THE REGULAR CONNECTIONS. IF COIN SIGNALS ARE REQUIRED ON BOTH NORMAL AND REVERSE POLARITIES, REMOVE ASSEMBLY P-60579 FROM COIN SIGNAL TRANSMITTER AND REPLACE WITH ASSEMBLY HD-680015-A.

Wiring Diagram, LPC72-55 Coin Telephone.