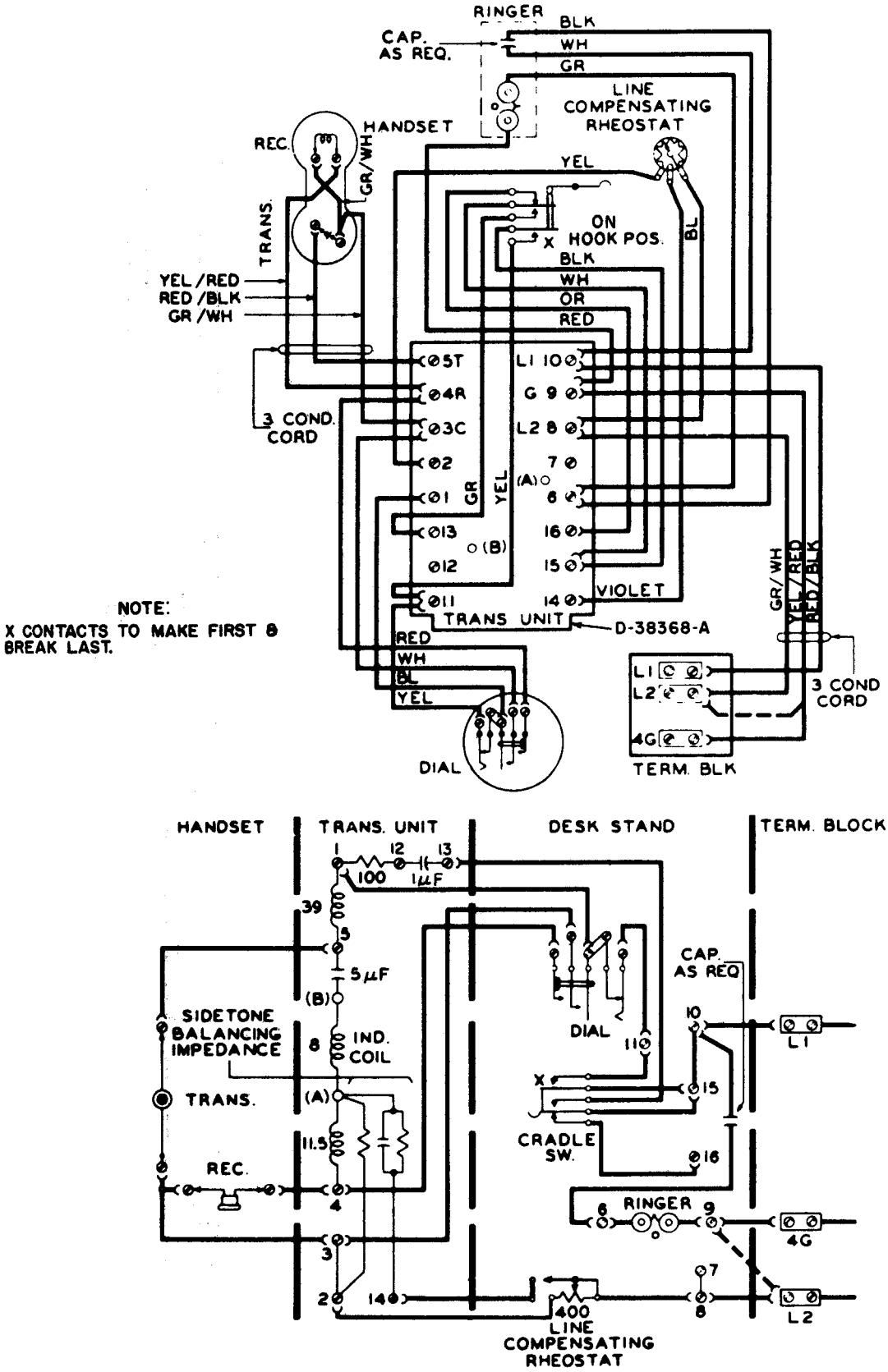

Schematic and Wiring Diagram, (N-802 Series)
Types 80-W and 80-Y Manually Adjusted Telephones.