GB56660
Decorator Drop-In Component Kit

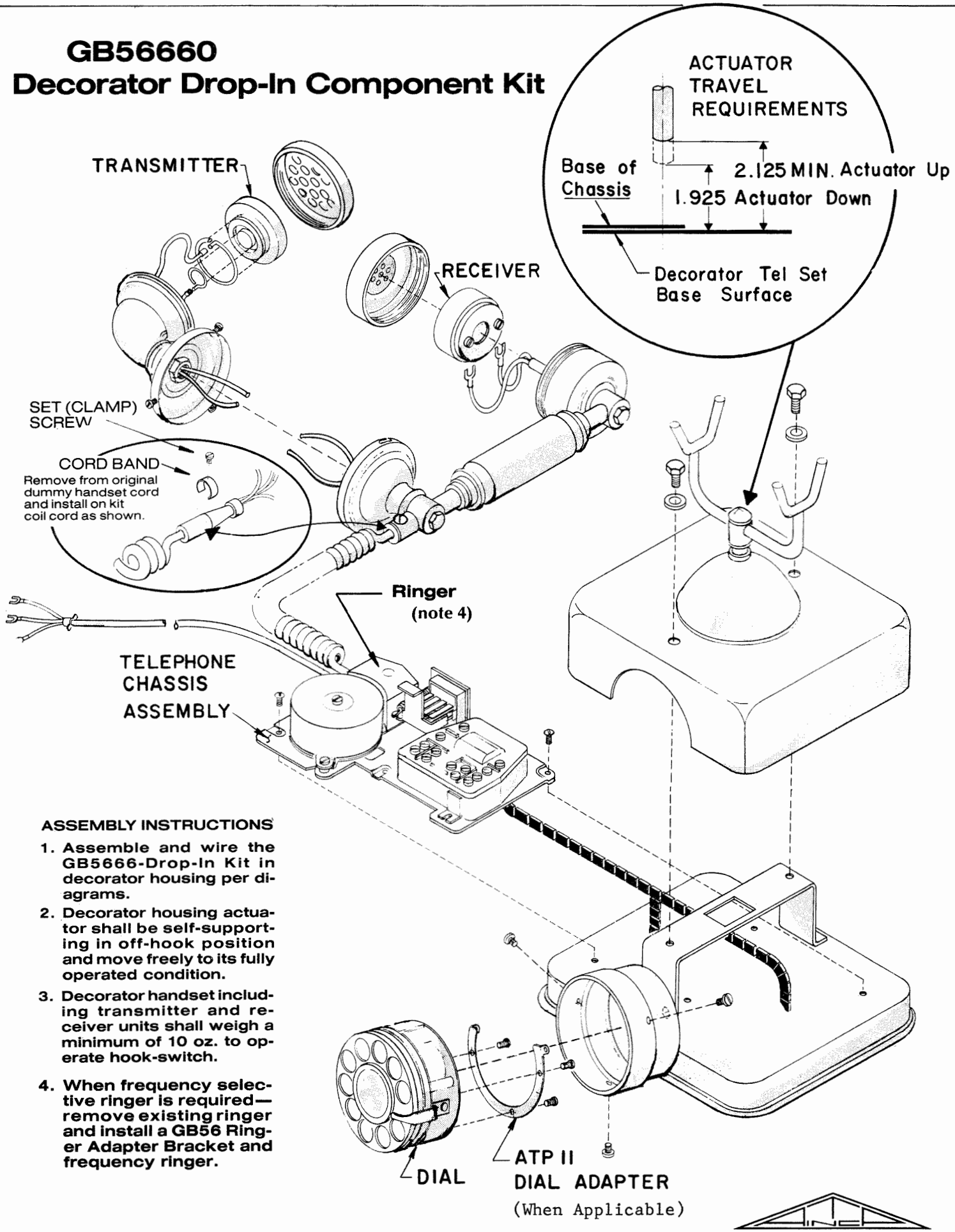

ASSEMBLY INSTRUCTIONS

1. Assemble and wire the GB5666-Drop-In Kit in decorator housing per diagrams.
2. Decorator housing actuator shall be self-supporting in off-hook position and move freely to its fully operated condition.
3. Decorator handset including transmitter and receiver units shall weigh a minimum of 10 oz. to operate hook-switch.
4. When frequency selective ringer is required—remove existing ringer and install a GB56 Ringer Adapter Bracket and frequency ringer.

Allen Tel Products, Inc
2211 SO. SUSAN ST., SANTA ANA, CALIFORNIA 92704

FORM 56660

FORM 56660

Downloaded from the TCI Library www.telephonecollectors.info

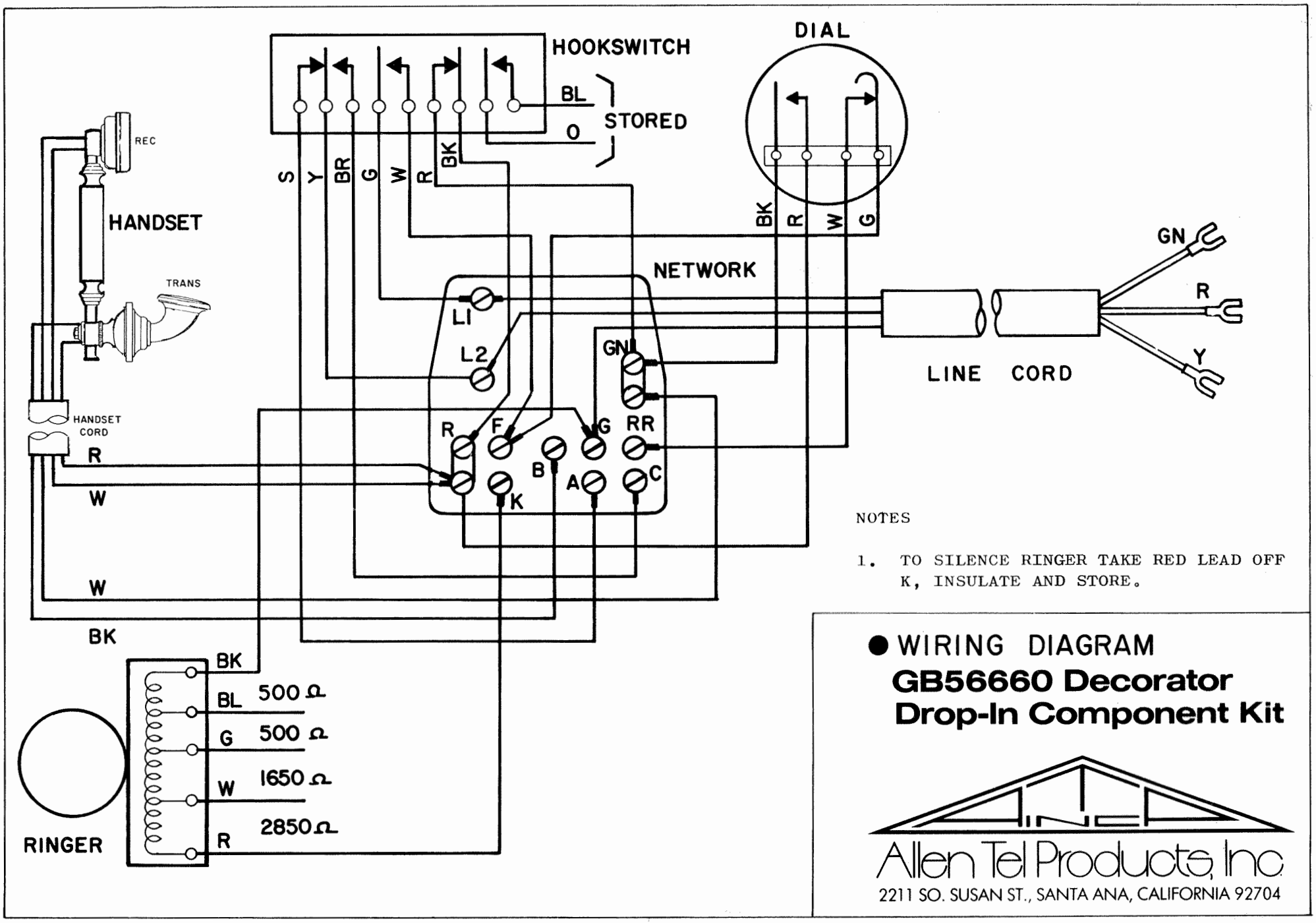

NOTES

1. TO SILENCE RINGER TAKE RED LEAD OFF K, INSULATE AND STORE.

● WIRING DIAGRAM

GB56660 Decorator Drop-In Component Kit

Allen Tel Products, Inc

2211 SO. SUSAN ST., SANTA ANA, CALIFORNIA 92704

Downloaded from the TCI Library www.telephonecollectors.info