Model 120C Coin Telephone Description, Installation, Programming, and Maintenance Manual

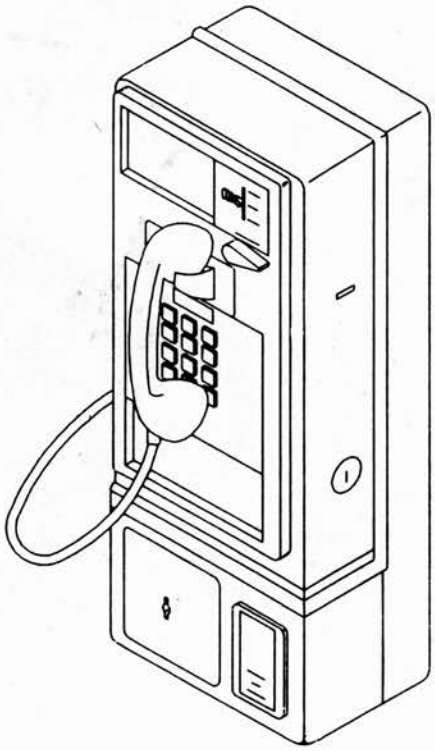

Quadrum Telecommunications, Inc.
700 Boulevard South, Suite 501
Huntsville, Alabama 35802

This manual was produced by Quadrum Telecommunications, Inc.

QUADRUM
TELECOM

Quadrum
Model 120C Coin Telephone, Description, Installation, and Programming Manual
Issue 6
CI-473522
September 1994

For more information on this or other products, please contact:
Quadrum Telecommunications, Inc.
700 Boulevard South
Suite 501
Huntsville, Alabama 35802
USA

Telephone:	(205) 650-2600
Fax:	(205) 650-2699
Customer Service:	(800) 239-5611

Table of Contents

Section 1 - General Description

Dimensions

The 120C Model Payphone is 21 inches high, 7 5/8 inches wide, and 6 inches deep.

Materials

The ***housing*** of the 120C is made of all steel construction. The upper and lower housings are formed of deep-drawn steel and contain reinforcing members welded in place. Extra heavy gauge steel is used for the cash vault door that also uses reinforcing members.

Construction

To reduce the possibility that an unauthorized person will gain access to the interior of the 120C, ***tongue and groove*** construction is used at the mating surfaced of the upper and lower housings and the lower housing cash vault door. The housing and door are protected further by hardened steel liners that retard attempts to drill into the housing at these points.

The ***upper housing*** is attached to the ***lower housing*** by two slide bars that secure it in six places. Use a one-piece, hardened, stamped steel T-wrench to open the housing.

The ***cash vault door*** is secured in place by a similar four-prong latching mechanism that is engaged by inserting the T-wrench into an opening in the center of the door's surface. The latch is secured by a four-tumbler cylinder lock, located on the left side of the lower housing. The 120C cash vault is equipped at the factory to accept the large coin box.

The pattern of ***mounting holes*** in the lower housing and behind the vault area (including the relationship of the wire entry opening to the mounting holes) is the same as the 120B.

Note: *The mounting holes behind the vault area may be used when mounting to a metal backboard. Provision is made for the use of 4 security studs to mount the payphone to the backboard.*

Design

The coin return receptacle has a top hinged door at the right front of the lower housing. Returned coins enter the receptacle from a passage behind the door and collect just below the bottom of the door. The coin return receptacle helps prevent "stuffing" fraud by directing material inserted in the door out a trap door and out of the coin path.

The upper housing contains a dial housing with the following components mounted to it:

- Touch Call Unit
- Hookswitch
- Cable Assembly

The Touch Call Unit prevents the generation of a single frequency tone when two buttons are depressed simultaneously. Leads from the various components and the plug are interconnected at the Touch Call Unit board.

The upper housing is connected to the lower housing through a 16-pin connector and cable assembly. The upper housing may be removed without disabling the 120C.

A stationary handset hanger is mounted on the front of the upper housing. The hookswitch tongue is actuated by a lever that projects through an opening in the housing between the support points of the hanger. An armored handset cord with lanyard is furnished as standard equipment and is on the left side of the housing to minimize tangling. The handset is hearing aid compatible.

Finish

The standard black powder-coated paint used on the upper and lower housings is highly resistant to abrasion and chemical attack. The coin return receptacle and faceplate are matte chrome finished. The handset cradle and hookswitch tongue have a bright chrome finish.

Features

The 120C contains many new and enhanced features. Some of these features can be programmed from the keypad and other features are standard and cannot be either enabled or disabled. The factory default settings on the standard features were selected to meet the needs of the majority of our customers. They may be changed on special orders prior to shipment. In addition, all programmable features can be preset on a per order basis.

Call Timer

The 120C has a programmable Local Call Timer. The Local Call Timer can be programmed from 1 to 99 minutes and operates only on outgoing calls. If enabled, all calls will be timed except those with a first digit of 0 or 1 or any free (spced) calls or 911. A Secondary Call Timer is provided for all time intervals after the initial time expires.

The Call Timer begins timing when the base rate is deposited. Pre-deposit of additional base rate can extend the length of the timer. Thirty seconds before the call times out, a warning tone is sent to the receiver. Five seconds before the call times out, another tone is sent to the receiver. When a call exceeds the set time limit, the keypad is disabled, and the transmitter or receiver are muted. If a new base rate is deposited, the phone returns to normal operation.

To obtain a reset condition, the phone must remain on-hook for a minimum time programmed on the new Line Timer option . Any shorter on-hook time results in the key pad transmitter or receiver being disabled and the call in progress continues to be timed.

The on-hook time should be set slightly longer than the time the phone must remain on hook before the Central Office extends a new dial tone to the user. This prevents the user from continuing the call without making an additional deposit. A Local Call Timer ensures that the length of local calls are restricted.

Free Call

The Free Call option provided on the 120C allows calling 911 and 0 without depositing base rate. The payphone makes the necessary connection to register deposit of base rate. If the Call Timer has been enabled, these calls are not timed.
This feature enables the 120C to allow emergency numbers in Prepay Mode where the Central Office does not have the capability of providing free calling of emergency numbers.

Ground Isolation

The 120C can operate in the Emergency Prepay Mode and provide ground isolation for use with simplexed coin battery or coin battery supplied on the tip lead. Therefore, ground isolation is provided automatically in the Emergency Prepay Mode and does not need to be programmed.

Pin Ground Protection

The Pin Ground Protection provides protection from continuous ground contact to any of the handset leads. If any handset lead is grounded the payphone's coin relay is still operational. The keypad is disabled as long as any handset lead is connected to ground.

Coin Battery

The 120C operates with offices that apply Coin Battery from L2 to ground or from ground to L1 and L2 connected together.

This feature allows the 120C to be used with offices that still serve conventional three-slot payphones (with older two-coil relay) that require the higher current available from paralleling the loop conductors. It also allows use of the telephone in offices that serve other manufacturers' payphones requiring Coin Battery to be sent only over one side of the line for proper coin relay operation.

Speed Call

The 120C can store up to ten Speed Call numbers that can be dialed by the user without depositing base rate.

The Speed Call numbers can be 1 to 16 digits each, and are dialed by pressing "*" followed by the keypad location (0 through 9). Speed Call numbers are not timed if the local timer option has been enabled.
This gives the payphone owner the ability to sell advertising space (the Speed Call Numbers) which is another source of potential revenue from the phone.

Touch Call Polarity Guard

The 120C provides a polarity guard for the Touch Call Unit in all modes of operation. The phone can be programmed to either enable or disable the Touch Call Unit on reverse polarity. This allows entry of credit card information via the keypad when the line polarity is reversed.

Transmitter Ground

The 120C is equipped with a Transmitter Ground detect circuit. If a ground is detected, the keypad is disabled and an option is provided to disable the receiver. The handset must be placed on-hook for approximately ten seconds to enable normal operation. The Transmitter Ground detect circuit detects if the user attempts to defraud the operating company by grounding the transmitter to simulate the base rate.

Volume Control

The volume on the 120C is user adjustable. The volume on the 120C can be increased in 3 steps to a maximum of +12 dB by pressing the "*" and "#" keys simultaneously or by pressing the volume control button on the dial faceplate. The receiver volume is set to normal each time the handset is placed on-hook. This feature is provided on the 120C to assist users with hearing deficiencies.

Alternate Coin Tones

Standard coin tones are 1700 and 2200 Hz. If alternate coin tones are selected, they are 1537 and 2200 Hz.

Subassemblies (Lower Housing)

The 120C lower housing consists of three major subassemblies:

- Rejector Mechanism
- Coin relay-hopper and coin chute assembly
- Chassis assembly

Rejector Mechanism

The rejector mechanism is fastened to a mounting plate that is held in place by a tab and one screw. A rejection chute (that connects the rejector mechanism and coin relay return outlets to the coin receptacle) is held in place by one captive screw.

The rejector mechanism is a sophisticated coin-testing device used for accepting genuine coins and rejecting slugs encountered in the field. The coin testing operation is listed below:

1. As coins enter the rejector, they are sorted into the three general size categories (quarter, nickel, dime) and placed into their own individual channel.

2. After sorting, each coin is checked for proper diameter and weight.

3. Next, it is checked for a perforation (like a washer) and released down an inclined rail.

4. As the coin rolls down the rail, it is tested for proper thickness.

5. Serration detectors are also used to determine the speed at which a coin should exit the rail. This is important because the material composition of the coin or slug determines the speed with which it leaves the inclined rail. If the coin travels too rapidly or too slowly, it strikes certain deflectors that cause it to be diverted to the rejection outlet. In addition, the nickel is tested for hardness and elasticity to determine whether it will be accepted or rejected.

6. Most rejected coins are diverted directly into the reject chute assembly and dropped into the coin return receptacle.

7. Ferrous slugs, oversized coins, and washers are trapped in the rejector and are released by operation of the coin release lever. During lever operation, the hinged sides of the lead-in chute and rejector separate. This allows several fingers to extend into the coin channels and dislodge trapped coins. In addition, wiper blades sweep past the magnets to clear the coin channels and direct trapped coins to the coin return receptacle.

8. There is also a coin entry chute located on top of the rejector that is equipped with an anti-stuffing device. Stuffing material introduced into the coin chute causes a metal plate to block the coin slot preventing the insertion of coins

Coin Relay Hopper and Coin Chute

The ***coin relay-hopper*** and ***coin chute*** are located below the rejector mechanism. They are retained near the top by a tab that drops over an opening in the reinforcing plate at the rear of the lower housing. The collect opening of the hopper extends through the floor above the coin box. It is held in place by a movable rail that is locked with three screws.

The ***coin relay-hopper*** and ***coin chute assembly*** dispose of coins held suspended on the trapdoors of the hopper. The hopper design accepts coins from an off-center entry point and retains them in random fashion. The relay also features a polarized selector mechanism. Operation is listed below:

1. Genuine coins leaving the rejector mechanism are sorted into three channels.

2. As a coin travels through the chute section, it operates the trigger switch associated with the coin denomination.

3. Each trigger switch provides an input to the totalizer. When the first coin passes through any of the trigger switches, it causes the coin relay trigger lever to operate and lock until collect or refund operation occurs.

4. After the coin passes through the coin chute, it falls into the relay-hopper and is channeled into the coin box in semi-postpay service. (If the call is prepay or emergency prepay, it stops on a double trap door).

5. During relay operation, the voltage polarity applied to the relay determines the selector card's operation.

   - As the relay operates, it short-circuits its own coil and substitutes a resistor in the circuit.
   - The coil-shorting feature allows the relay to operate completely on a 200 millisecond pulse.
   - A long release time is provided by the shorted coil to ensure complete disposal of coins.

6. The voltage polarity causes the selector card to tilt as it moves downward and opens the proper trapdoor to either collect or refund the coins.

7. Release of the relay resets the trigger lever and returns the trapdoor to the closed position, ready for another deposit.

8. The coin chute is removable. This allows coin chute trigger switch servicing without removing the entire coin relay-hopper assembly.

9. An electronic trigger switch assembly is available that requires no adjustments and reduces maintenance.

Chassis Assembly

The chassis assembly is mounted on the left side of the lower housing and is attached by a tab and one captive screw. Electrical interconnection to other assemblies is made by connectors mounted on the chassis assembly. Operation is listed below:

- The ringer is an electro-mechanical unit used to signal an incoming call. A Type 48 ringer, including two brass ringers, is mounted to the 120C chassis assembly. Two wires connect tip and ring from the ringer assembly to the chassis. Ringer volume is preset at full volume.
- Dial housing - J4 (16-pin connector)
- Coin Trigger Switch (Mechanical) - J5 (4-pin connector)
- Coin Trigger Switch (Electronic) - J3 (5-pin connector
- Coin Relay - J2 (3-pin connector)
- Line wire terminal block (located on the lower housing) - J1 (3-pin connector)
- A one-way amplifier circuit in the chassis prevents potential fraudulent use of the handset receiver as a microphone in semi-postpay service.
- Line wire termination is made with a three (3) position terminal block adjacent to the relay-hopper assembly in the lower housing. The junction is used to connect the service cable (tip, ring, and ground) to the 120C. Three (3) wires from the line wire terminal connect to the chassis. The service cable enters through a rubber grommet lined opening in the rear center of the lower housing.

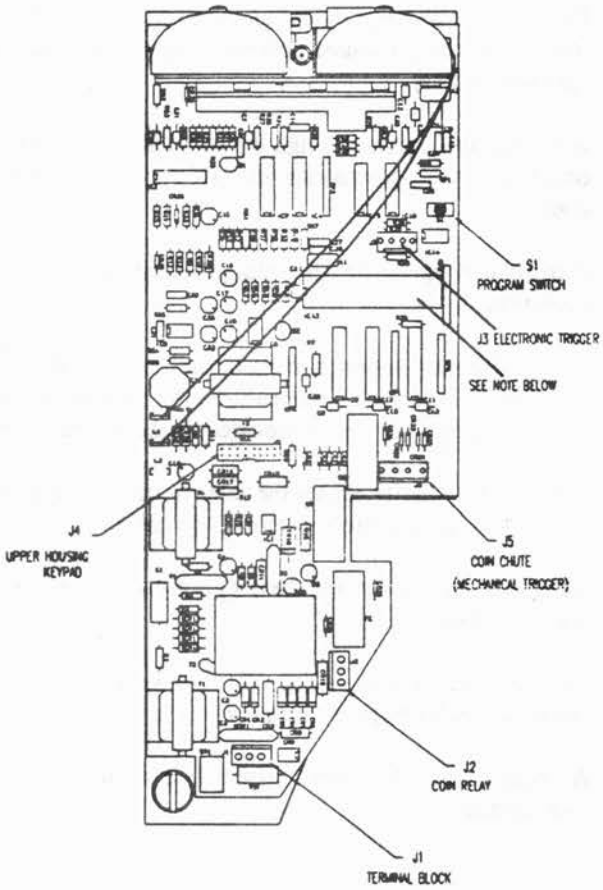

Chassis Wiring Diagram

Note: Microprocessor chip should not be removed from its socket by anyone other than a qualified Quadrum Technical Service Representative. Improper ESD protection and/or placing on a different chassis assembly can severely damage the microprocessor

Subassemblies (Upper Housing)

The upper housing contains two subassemblies:

1. Hookswitch Touch Call Assembly (consists of two subassemblies):

   - *Hookswitch Assembly* - Connects the ring side of the line wire to provide loop current and dial tone when off hook. When the handset is removed from the cradle, the spring-loaded hookswitch lever activates a leaf spring contact assembly.
   - *Touch Call Unit (TCU)* - Button assembly and sub faceplate. Since the dual frequency tone is generated by electronic components mounted on the chassis, no electronic components are contained in the dial assembly. This assembly provides connections for the hookswitch assembly, handset, and an optional volume control button for ADA compliance.

   A modular ribbon cable assembly connects the hookswitch TCU to the chassis.

2. Handset

   - *Hearing Aid Compatible (standard)* - Identified by the blue grommet located at the point where the armored handset cord enters the receiver.
   - *Handset Receiver Capsule* - Designed to provide immunity to damage from impact shock. The transmitter and receiver caps are permanently bonded to the handset shell.
   - *Handsets* with vandal-resistant lanyards are standard. Handsets without lanyards are optional.

Section 2 - Install the 120C

Shipping Container

The 120C is shipped completely assembly with coin vault door, payphone number card, customer instruction cards, and plastic inserts that protect the cards (window kit). In some cases, locks, keys, and coin boxes must be ordered separately. Refer to the Spare Parts and Ordering information section in the back of this manual for part numbers.

Mode of Operation

The 120C is preprogrammed for Emergency Prepay operation but can be modified for Prepay or Semi-Postpay operation. In each of the two prepay modes, coin collection or refund can be made at any time by appropriate application of coin battery signals at the Central Office.

Application of the coin battery to the line causes the rate relay control circuit to release the relay immediately and connect the coin relay to the transmission network.

Location

The payphone installation location is specified on the service order. The location should meet the following criteria:

- ☐ Sufficient lighting
- ☐ Free of excessive noise, vibration, and dirt
- ☐ Clear of glass counters, showcases or other fragile objects
- ☐ 6-inch clearance from fluorescent lights, transformers, and similar apparatus to avoid inductive interference.

Mounting

Note: The 120C is shipped with all subassemblies mounted and wired. The payphone can be mounted and connected to the line and ground wires without removing any of the subassemblies. However, the upper housing must be removed from the lower housing before mounting.

Mounting Surface

A vertical mounting surface is required. A tilt greater than 1.5 degrees in any direction will cause malfunction of the coin rejector mechanism. Determine a vertical surface by following the steps below:

- ☐ Place a spirit level vertically against the mounting surface with the top end of the level at the required height of the payphone.
- ☐ Move the top or bottom end of the level away from the mounting surface as required to obtain a vertical reading.
- ☐ Ensure that a vertical position is obtained in both directions.
- ☐ If mounting surface deviation from a vertical pane exceeds 1.5 degrees, level the booth or other mounting surface to bring the payphone to a vertical position.

- The mounting surface for the backboard must be strong enough to support the backboard and payphone. In addition, the surface must be flat and devoid of any peaks or valleys which may create gaps large enough to allow the backboard to be pried loose.

Note: Refer to your company's procedures for the mounting height of the backboard. Local and federal guidelines have been proposed to increase accessibility by persons with motion impairments. To mount the payphone in a booth or enclosure, refer to that manufacturer's procedures.

Remove the Upper Housing From the Lower Housing

- Insert key into the upper housing lock and rotate it one-fourth turn counterclockwise (towards you).
- Insert T-wrench into the opening in the upper housing and turn it one-eighth turn clockwise (away from you).

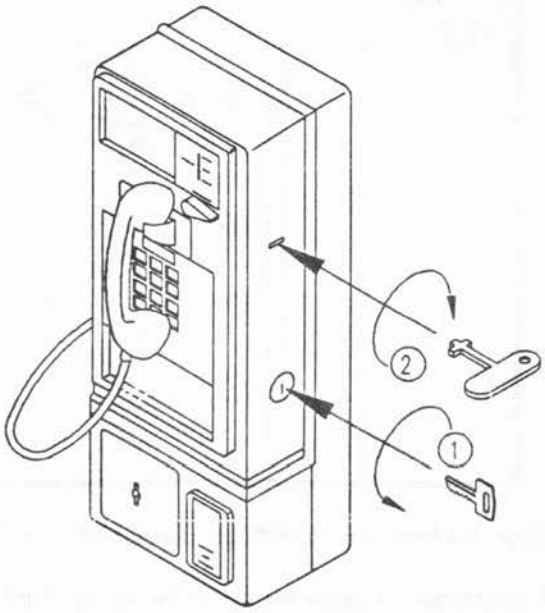

- Grasp both sides of the upper housing and slide it forward. At the same time that the upper housing is being removed, reach around it on the left side and disconnect the cable that connects the upper housing to the chassis assembly.

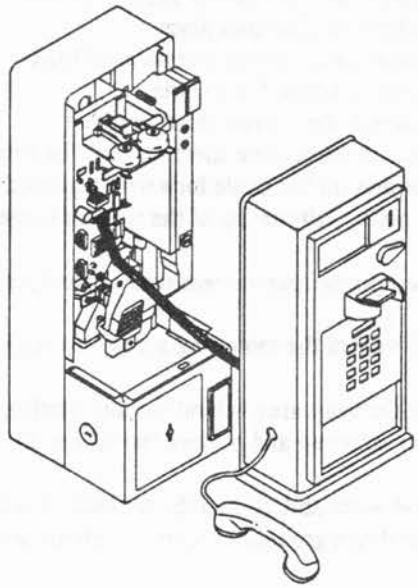

Mount the Payphone (When Using a Backboard)

Ten (10) mounting holes are available (five (5) on each side in the backboard). The mounting screws used must be of proper size and type for the mounting surface. If wiring is run on the surface, position the wire such that it will lay in the channels and grooves of the backboard and emerge from the backboard entrance hole. If the wire is run through the wall, ensure that the backboard entrance hole aligns with the final position of the wire.

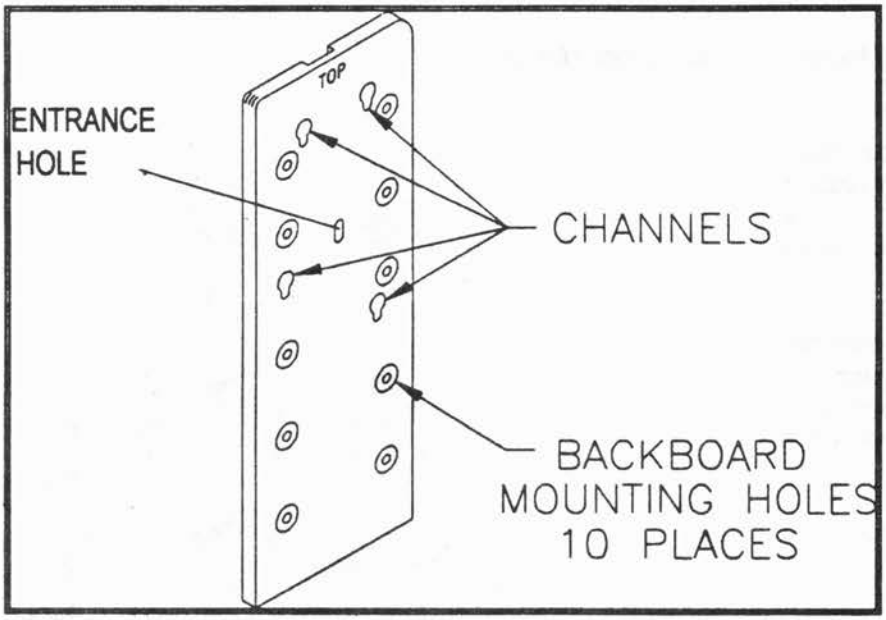

Ensure the backboard is level in all directions. Then, proceed with the steps listed below.

1. Install and tighten the four security studs in the threaded holes on the back of the payphone.
2. Align the payphone with the backboard and run the wires from the backboard into the backboard's key slots. Allow the payphone to slide into place.
3. Install and tighten the mounting screws as follows:
   - ☐ One (1) directly below the chassis
   - ☐ One (1) through the chassis clearance hole
   - ☐ One (1) behind the rejector mechanism. For better access, disconnect the rejector chute at the bottom of the rejector and tilt the chute forward. Loosen the rejector mounting screw at the top of the rejector mounting plate. Tilt the top of the rejector to the right to expose the mounting hole.

     Note: The rejector may be removed without removing its top mounting screw by lifting it up and out.

     Install and tighten the mounting screw and reassemble the rejector mechanism.

   - ☐ Two (2) in the vault area behind the anti-stuffing device. To install the two screws, loosen the anti-stuffing device screw and remove the anti-stuffing device.

4. Connect the line wires and ground the terminal block at the base of the lower housing. The payphone ground is connected for direct grounding to the payphone set housing. No additional ground wire strap assembly is required.

Lock Installation (Optional)

If the payphone is ordered ***with*** upper and lower housing locks, disregard this section. If the payphone is ordered ***without*** upper and lower housing locks, follow the procedures for lock installation below.

Upper Housing

1. Remove the upper housing.
2. Manipulate (from the outside) the locking bar and cam portion of the lock assembly through the cutout in the upper housing
3. Manipulate the mounting nut over the locking bar with the cutout facing toward the inside of the upper housing
4. Lock the cylinder by rotating the key one-eighth of an inch clockwise (away from you). Note: Adjust the locking bar as follows: loosen the locking bar mounting screw, lock the cylinder, and retighten the screw.
5. Tighten the mounting nut.
6. Replace the upper housing by connecting J4 to the chassis and sliding the housing into position.

Lower Housing

1. Insert the lock assembly through the inside of the vault compartment through the opening in the left side of the lower housing.
2. Secure the lock assembly with the six captive screws furnished. *Note: Start all mounting screws before tightening completely.* Make certain even pressure is given to each screw.

Lock the Telephone

Turn the T-wrench clockwise to move the locking bars to an unlocked position.

Reconnect the housings

1. To reconnect the front housing to the rear housing:
2. Slide the front housing onto the grooves at the lower part of the tear housing until the phone is back together.
3. Turn the T-wrench counterclockwise.
4. Turn the key clockwise.

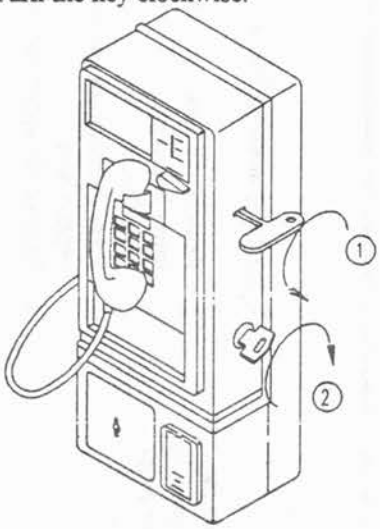

5. Remove the key and T-wrench.
6. Put the phone On Hook.

Install the Window Kit

1. Install each of the two (2) informational windows provided in the window kit as listed below:
2. Place the informational card you want in the window.
3. Place one end of the plastic window into the lower slot of the informational window and gently bend the plastic until it can be slid into the upper slot of the informational window.

Section 3 - Programming the Payphone

Programming Features

The 120C contains many features that are different from those available on the 120B. These features are ***programmable*** and the factory default settings may be changed after shipment. All programmable features can be preset on a per order basis. Standard features may be changed with special factory settings prior to shipment. *Refer to the Factory Setting column for factory configuration.*

Important Points to Remember During Programming

To start	*Press **
To end	*Press #*
Acceptance Tone	*1 short (400ms) tone burst*
Error Tone	*4 very short (200ms) tone bursts*

When an error tone is received, the programming for that option is void and you must start over.
The phone remains in programming mode until the handset is placed on hook for a minimum of 5 seconds.

Enter Programming Mode:

1. Remove the upper housing (leaving the cable connected between the upper and lower housing).
2. Go off hook.
3. Press the program switch (S1) on the main chassis card (upper right of the chassis board.
4. Replace the upper housing or use a parking tool for ease of programming.

The 120C Programming Options Table on the next page details features, entry mode, result, examples, and factory configurations for the following:

- ▯ Operating Mode (MD)
- ▯ Change Base Rate (BR)
- ▯ Change Local Call Timer (CT)
- ▯ Secondary Call Timer (ST)
- ▯ First Coin Ground Option (CG).
- ▯ Mute Transmitter on Call Time-out (MT)
- ▯ Mute Receiver on Call Time-out (MR)
- ▯ Enable Dial on Reverse Battery (ED)
- ▯ On-Hook Timer (NL)
- ▯ Alternate Coin Tone (AC)
- ▯ Electronic Trigger Switch (ET)
- ▯ Enable Coin Free 911/0 (FC)
- ▯ Program Coin Free Numbers - Speed Call (PN)
- ▯ Ground Isolation for Emergency Mode (GI)

120C Programming Options Table

Feature	Enter	Result	Example	Explanation	Factory Setting
Operating Mode (MD) * 63 ▯ Semi-Postpay (SP) ▯ Prepay (CF) ▯ Emergency Prepay (EP)	 * 6377 # for semi-postpay * 6323 # for prepay * 6337 # for emergency prepay	*Accept* - one short 400ms tone burst *Reject* - four short 200 ms tone bursts	*Key sequence for prepay mode is * 63 23 #.*	For more definitions, refer to the appendix at the end of the booklet. For ~~semi-postpay~~ service, fasten the coin chute open to the collect side using 4-40 by 1/8 inch screw (D-762044-A) and disconnect coin relay connector J2. See note below.	Emergency Prepay
Change Base Rate (BR) * 27 ▯ Enter 1-3 digits	 * 27XXX# XXX = (0.05 to 9.95) in 0.05 increments	*Accept* - one short 400ms tone burst *Reject* - four short 200 ms tone bursts	*Key sequence for $.10 base rate is * 27 10 #.*	The last digit entered must be 0 or 5.	25 cents

Note: Coin hopper illustration is listed on the next page.

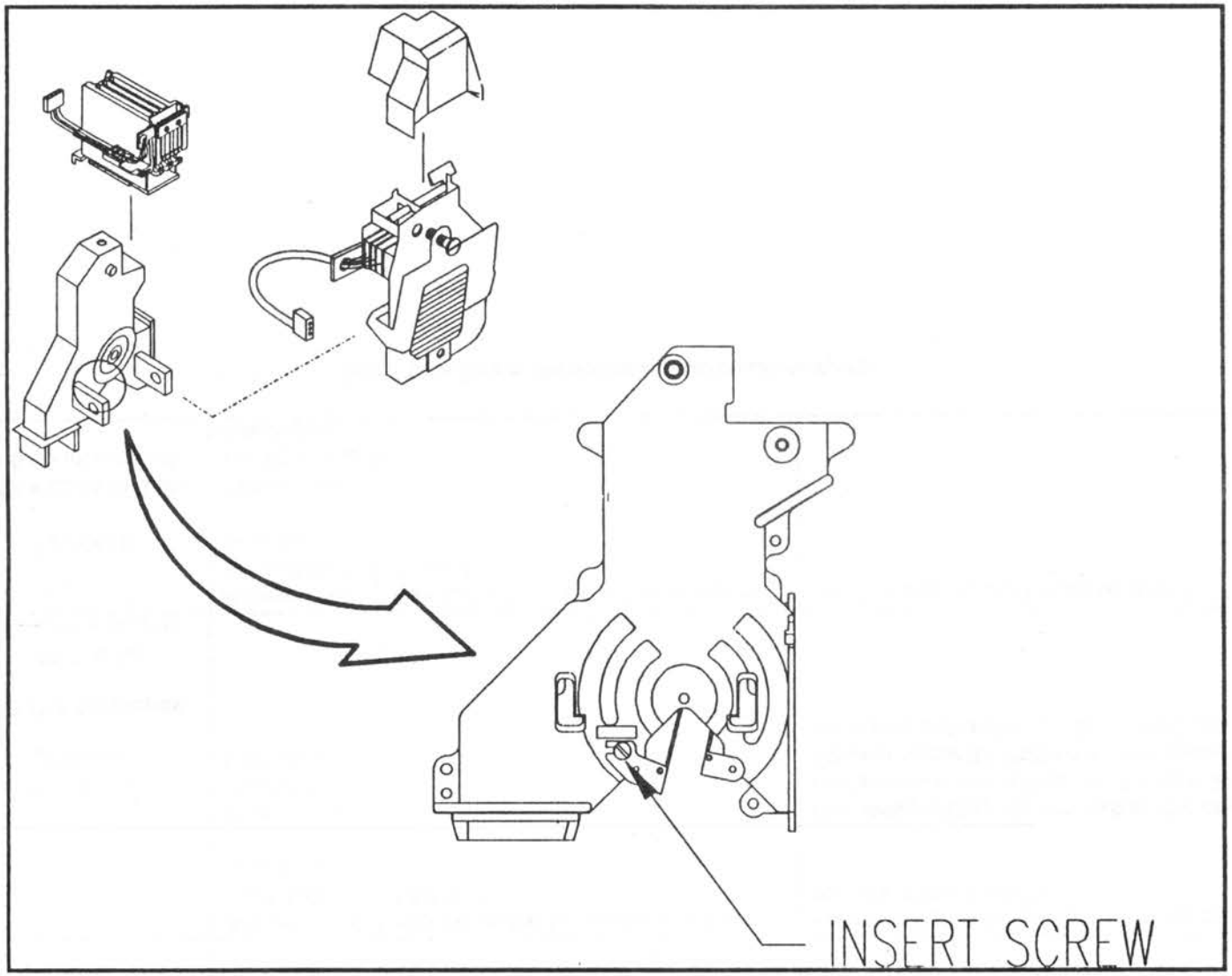

Coin Hopper Screw Placement for Semi-Postpay

120C Programming Options Table

Feature	Enter	Result	Example	Explanation	Factory Setting
Local Call Timer (CT) * 28 ▯ For calls not to be timed ▯ For each base rate deposited	 * 28 0 # * 28XX# XX = 1 - 99 (min) #	*Accept* - one short 400ms tone burst *Reject* - four short 200 ms tone bursts	*The key sequence to program five (5) minutes for each base rate, enter * 28 5 #.* Can be programmed from 1 to 99 minutes. Only operates on outgoing calls and begins timing when base rate is deposited. *Notes: Secondary call timer is provided for all time intervals after initial time expires.*	Allows call length restriction. The timer may be programmed from 1 to 99 minutes. When a call times out, the keypad is disabled and a program option allows the receiver and/or the transmitter to be disabled. Predeposit of additional base rate to extend the length of the timer is allowed. *Thirty seconds* before the call times out, a warning tone is sent to the receiver. *Five seconds* before the timer times out, another tone is sent to the receiver. The new line time is also associated with this option. ***This prevents the user from obtaining a new line without making the initial base rate deposit.***	Disabled
Secondary Call Timer (ST) * 78 ▯ If secondary calls are not to be times ▯ To time secondary calls	 * 780 # * 78XX# XX = 1 - 99 (min)	*Accept* - one short 400ms tone burst *Reject* - four short 200 ms tone bursts	The key sequence for 3 minutes of secondary time is * 78 3 #.	The Secondary Call Timer allows programming a second time for the Call Timer. When programmed, after the initial Call Timer times out and another base rate is deposited, the Secondary Call Timer will operate and may be longer or shorter than the initial call timed.	Disabled

120C Programming Options Table

Feature	Enter	Result	Example	Explanation	Factory Setting
First Coin Ground (CG) * 24		*Accept* - one short 400ms tone burst *Reject* - four short 200 ms tone bursts	*Key sequence for ground on first coin is * 249 #.*	This option applies in Prepay mode only and is used if the Central Office requires a ground connection to collect or refund.	Disabled
▯ To obtain coin ground when first coin is deposited	* 249 #				
▯ To prevent coin ground	* 246 #				
Mute Transmitter (MT) *68		*Accept* - one short 400ms tone burst *Reject* - four short 200 ms tone bursts	*The key sequence for an active transmitter is * 68 6 #.*	Transmitter Mute applies for all time-out.	Disabled
▯ Transmitter muted	* 689 #				
▯ Transmitter active	* 686 #				

120C Programming Options Table

Feature	Enter	Result	Example	Explanation	Factory Setting
Mute Receiver (MR) *67 ▯ Receiver muted ▯ Receiver active	 * 67 9 # * 67 6 #	*Accept* - one short 400ms tone burst *Reject* - four short 200 ms tone bursts	*The key sequence for a muted transmitter is * 67 9 #.*	Receiver Mute applies after call time-out or when ground is detected on the transmitter.	Enabled
Enable Dial on Reverse Battery (ED) *33 ▯ Enable dial on reverse battery ▯ Disable dial on reverse battery	 * 33 9 # * 33 6 #	*Accept* - one short 400ms tone burst *Reject* - four short 200 ms tone bursts	*Key sequence to enable dial on reverse battery is * 339 #.*	The Enable Dial option applies in Prepay and Emergency Prepay only and is used if the Central Office provides reverse line polarity when the called party answers.	Enabled

120C Programming Options Table

Feature	Enter	Result	Example	Explanation	Factory Setting
On-Hook Timer (NL) *65 ▯ For the time representing how long the Central Office requires the phone be on hook before a new line is seized	* 65 XX # XX = 1-2 digits in .1 second increments	*Accept* - one short 400ms tone burst *Reject* - four short 200 ms tone bursts	*Key sequence to select 1.5 seconds is * 65 15 #.*	This parameter is used when calls are being timed to prevent the user from flashing the hook switch and getting a reset condition thereby disabling the Call Timer. This parameter should be set 100 milliseconds greater than the maximum time the Central Office requires the phone to be on hook to obtain a new line.	1 Second
Alternate Coin Tone (AC) *22 ▯ Enable Alternate Coin Tone ▯ Disable Alternate Coin Tone	* 22 9 # * 22 6 #	*Accept* - one short 400ms tone burst *Reject* - four short 200 ms tone bursts	*The key sequence to enable Alternate Coin Tone is * 22 9 #.*	Dual coin tone transmission is 1700 and 2200 Hz). When alternate coin tone is enabled, 1537 and 2200 Hz tones are generated.	Disabled

120C Programming Options Table

Feature	Enter	Result	Example	Explanation	Factory Setting
Electronic Trigger Switch (ET) *38		*Accept* - one short 400ms tone burst *Reject* - four short 200 ms tone bursts	*The key sequence to enable electronic trigger switch is * 38 9 #.*	The 120C may be furnished with a mechanical or electrical trigger switch. When furnished from the factory with an electrical switch, the electronic trigger switch is enabled. When converted from a mechanical trigger switch to an electrical trigger switch, this feature must be enabled. This option allows enabling or disabling of electronic trigger switch. When the electronic trigger switch is disabled, the mechanical trigger switch is automatically enabled. (See page 4 for trigger connection).	Disabled
▯ Enable Electronic Trigger Switch	* 38 9 #				
▯ Disable Electronic Trigger Switch	* 38 6 #				

Free Call (FC) *32 ▯ To allow 911 or 0 free ▯ To prevent 911 or 0 free	 * 329 # * 326 #	*Accept* - one short 400ms tone burst *Reject* - four short 200 ms tone bursts	*The key sequence to allow 911 is * 32 9 #.*	This option is valid for prepay and emergency prepay. This option is also valid for semi-postpay when using version 3.05 or later software. Option provides making emergency (911) and operator (0) calls without depositing the base rate. This option should be enabled in: ▯ Emergency prepay mode only when the CO is not programmed to allow 911 and 0 calls free. ▯ Prepay mode to allow 911 and 0 calls without depositing base rate. ▯ Semi-postpay mode to allow 911 and 0 calls free if the CO reverses line polarity when dialing 911 or 0.	Disabled

120C Programming Options Table

Feature	Enter	Result	Example	Explanation	Factory Setting
Speed Call (PN) *76 ▯ Select location number ▯ Enter phone number	* 76XY # X = location 0 - 9 Y = phone number 1 - 16 digits	*Accept* - one short 400ms tone burst *Reject* - four short 200 ms tone bursts	*The key sequence to program 555-1212 in location 2 is * 76 2 5551212 #.* *The key sequence to delete the number programmed in location 2 is * 76 2 #.*	Gives the caller easy access to the most commonly called locations. Promotes increased phone usage. Provides the capability of storing up to ten (10) speed call numbers that can be user dialed without depositing the base rate. Number may be 1 to 16 digits each and can be dialed by pressing '*' key followed by the assigned keypad number (0 - 9). Calls are not timed if the local call timer option has been enabled. User may call preprogrammed numbers by going off hook and pressing '*' followed by the location (0-9). The * and location number are not dialed to the Central Office. No coin deposit is required for the programmed numbers and these calls are not timed.	None Programmed

120C Programming Options Table

Feature	Enter	Result	Example	Explanation	Factory Setting
Ground Isolation (GI) *44 ▯ Enable Ground ▯ Disable Ground	 * 44 9 # * 44 6 #	*Accept* - one short 400ms tone burst *Reject* - four short 200 ms tone bursts	*The key sequence to enable Transmitter Ground is * 449 #.*	In some Central Offices the coin test is too short (50 milliseconds or less) for the 120C to respond and close proper relays for the Central Office to detect coin ground. In such cases, the ground isolation can be disabled and coin ground will be applied as soon as the base rate is deposited.	Enabled

Section 4- Payphone Installation Tests

Standard installation tests for ringing and noise level must be performed. In addition to these tests, various coin mechanism tests must be performed. Tests for Prepay service differ from those for Semi-Postpay service. ***Follow the tests for your specific service.***

Prepay Service

To check the coin mechanism operation, use the following procedures:

1. For a payphone set for twenty-five cent service, deposit twenty cents and check that a call cannot be made. Deposit a nickel and dial the number assigned to the payphone. When a busy tone is heard, hang up and check for the correct coin refund.
2. Deposit a quarter and dial the number assigned to the payphone. When a busy tone is heard, hang up and check for the correct coin refund.
3. Remove the cash vault door.
4. Deposit a quarter, dial the test line and hang up when a connection is made. Verify that the quarter falls into the cash vault.
5. Deposit a quarter and dial the local test desk or operator. Deposit a dime, nickel, and quarter. Have the test/desk person verify which coins were dropped apply refund current. Verify that the coins drop into the coin return receptacle.
6. Redeposit the coins and have the test/desk person verify which coins were dropped and apply collect current. Verify that coins drop into the vault door.
7. Replace and lock the cash vault door.

Semi-Postpay

To check the semi-postpay operation, use the following procedures:

1. Dial the payphone number and wait for a busy tone. Hang up.
2. Unlock the cash vault door.
3. Dial a predetermined number for assistance in checking the payphone's operation. ***Do not call the operator.***
4. When the party answers, deposit less than initial rate. The transmission block should remain. Then, deposit money to obtain initial rate. This should remove the transmission block. Hang up.
5. Call the same party for further assistance. When the called party answers, deposit initial rate. The transmission block should be removed. Hang up.
6. Call the operator for assistance with coin signal testing.
7. Deposit a coin of each denomination and have the operator identify each coin. Hang up.
8. Lock the cash vault door.

Field maintenance is normally limited to cleaning and replacing defective components.

120C Upper Housing Components

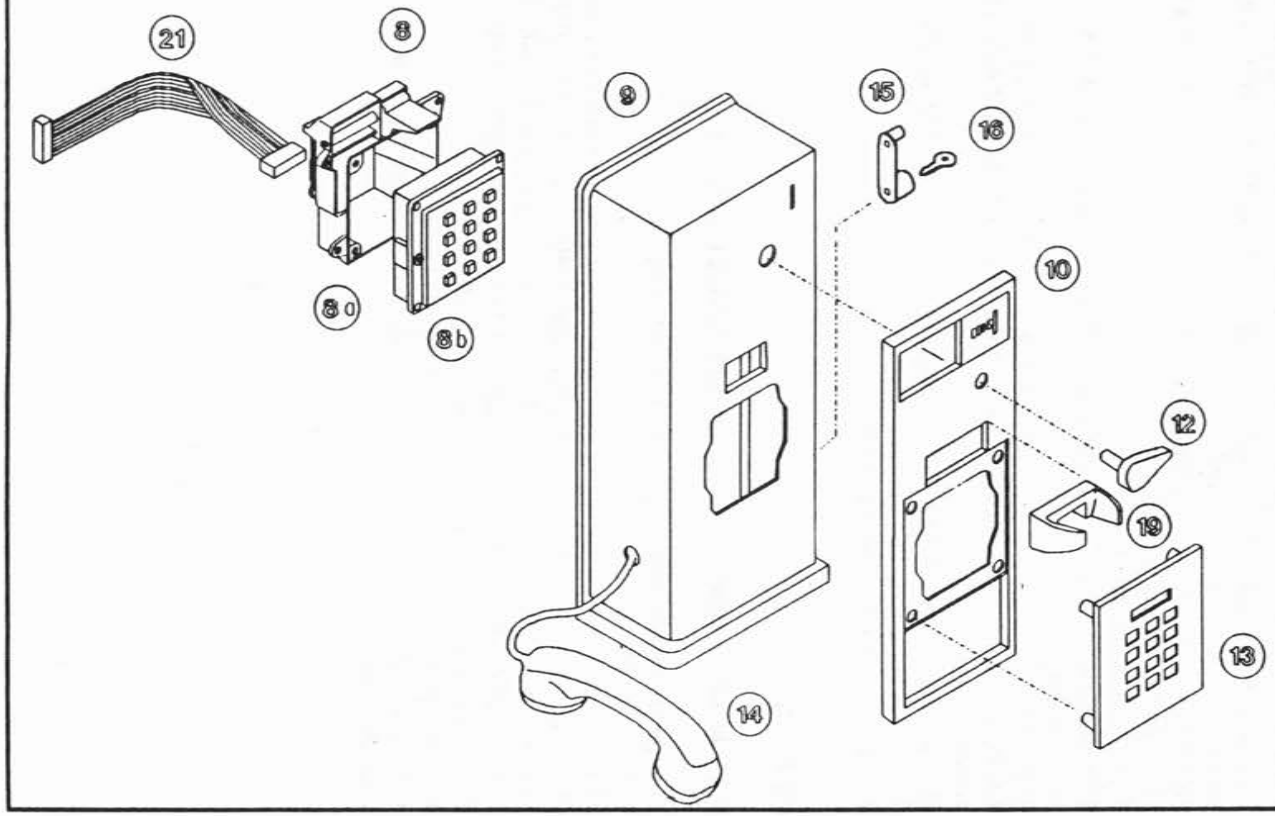

8 - Touch Call Unit Assembly

8a - Hookswitch

8b - Touch Call Unit

9 - Upper Housing Assembly

10 - Faceplate

12 - Coin Return Lever

13 - Faceplate Adapter

14 - Handset

15 - Upper Housing Lock

16 - Upper Housing Lock Key

19 - Cradle

21 - Ribbon Cable (TCU)

120C Lower Housing Components

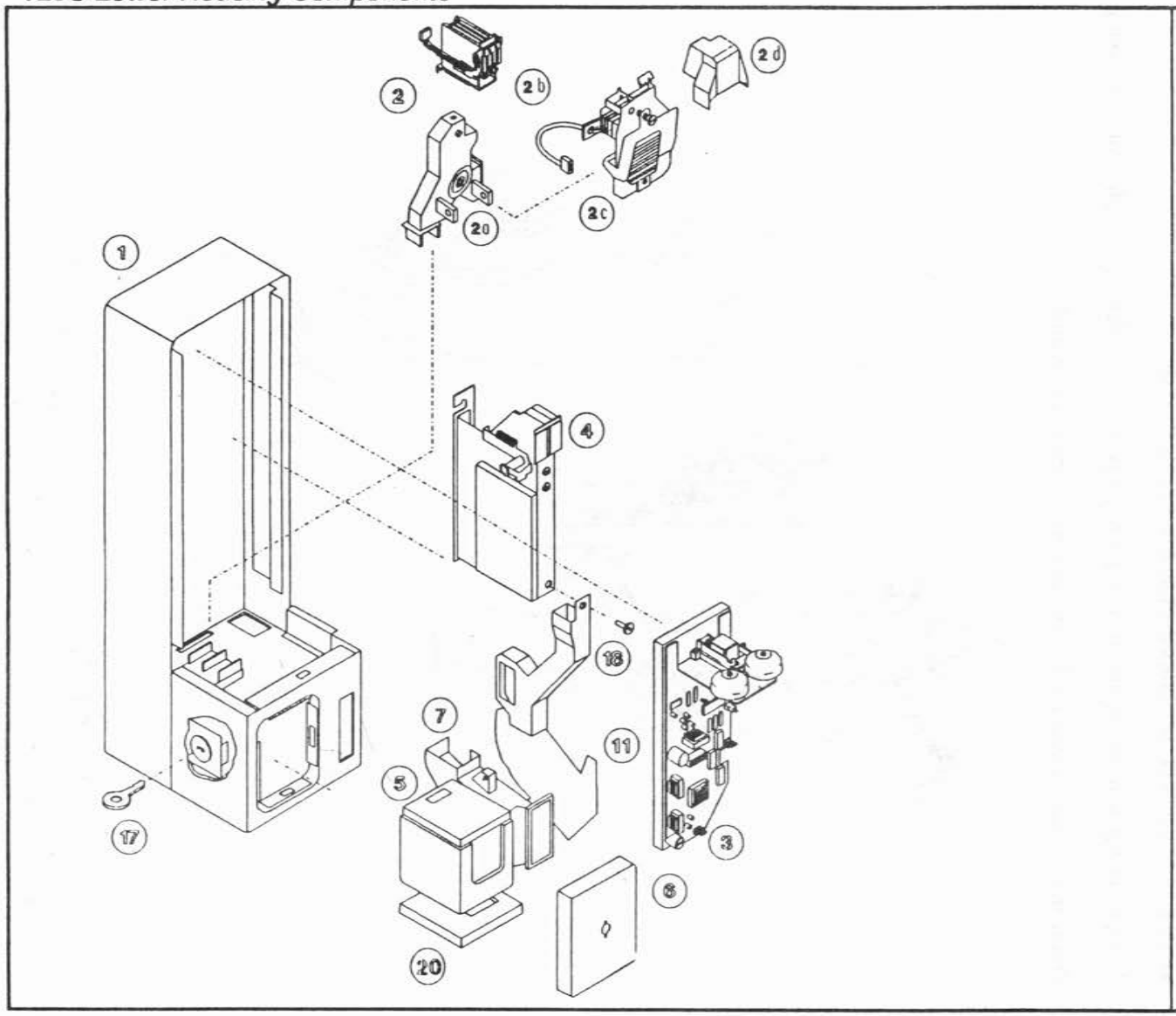

1 - Lower Housing Assembly

2 - Hopper Coin Relay Assembly

2a - Hopper

2b - Mechanical Trigger Chute/Electronic Trigger Chute

2c - Coin Relay

2d - Cover

3 - Printed Circuit Assembly (Chassis)

4 - Coin Rejector

5 - Vault Box

6 - Vault Box Door

7 - Coin Return Receptacle

11 - Vault Shield

17 - Vault Box Lock

18 - Reject Chute Assembly

20 - Vault Liner

Chassis Assembly

Perform the following routine inspection of the chassis assembly before proceeding with the specific troubleshooting procedure described in Table 1.

1. Check L1, L2, and GND on the line wire terminal block for loose connections and/or bad crimping of the wires. If bad crimping exists, replace the connector cable assembly that connects to the chassis assembly.

2. Check for damaged components. If damage exists, replace the entire chassis assembly.

3. Verify that the line is in operating condition and the polarity is correct.

4. Check for broken wire connectors. If broken wire exists, replace the defective assembly or subassembly.

5. Ensure that the chassis assembly is installed properly and is fully seated.

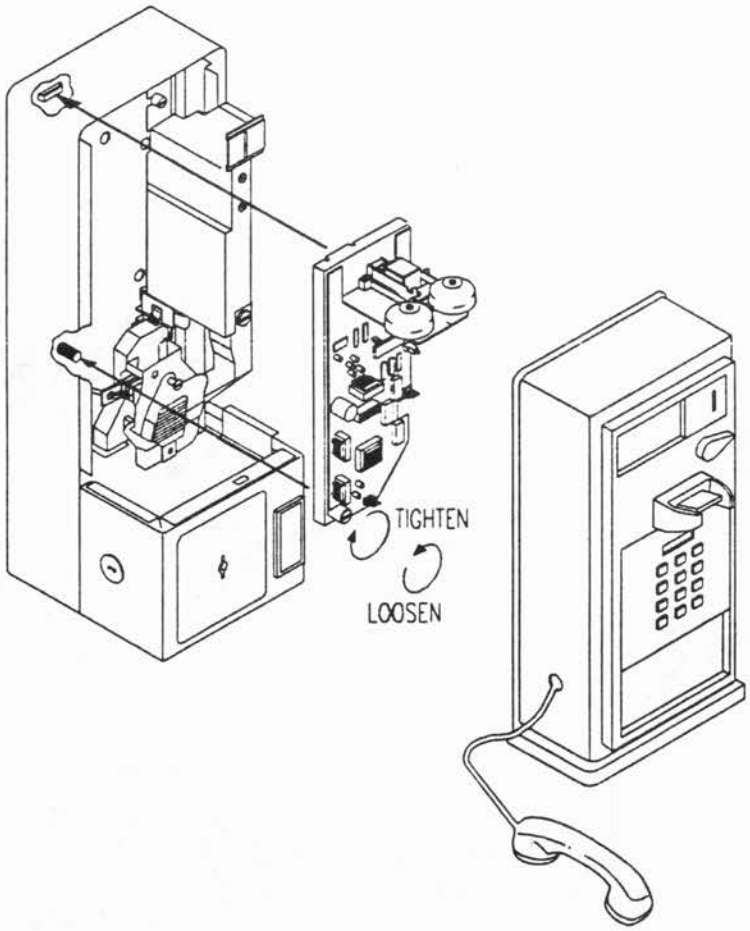

Table 1. Troubleshooting the Chassis Assembly

Trouble	Field Action
Cannot break dial tone Cannot talk in semi-postpay mode Free Calls	1. Check line polarity 2. Check for loose connections 3. Check programming options 4. Replace chassis, then hookswitch dial assembly, coin relay-hopper, and coin chute assembly
Calls made on less than initial rate deposited	Check trigger switches and replace coin relay-hopper and coin chute assembly. Reprogram base rate. Refer to page 11.
Dead telephone. No dial tone	1. Check to see if the line is shorted or opened. 2. Check for loose connections (especially between upper and lower). 3. Replace handset assembly.
Coin relay will not collect or refund less than initial rate deposit.	1. Replace entire chassis assembly. 2. Problem at Central Office 3. Coin telephone, Central Office interface problem. 4. Verify coin relay flag is tripped.
Coin-tone or coin-pulsing problem	1. Check coin chute operation and replace if necessary 2. Replace entire chassis assembly
Coin tones heard in receiver	Replace entire chassis assembly
No Coin Tone	1. Check rejector operation 2. Check carefully for trigger switch damage. If found, replace coin chute. Do not adjust. 3. Check line polarity 4. Check chassis for loose connections 5. Replace chassis assembly
TCU not disabled by totalizer before initial rate is reached (prepay option)	Replace entire chassis assembly
Transmitter not disabled on reverse battery before rate is reached (semi-postpay option)	1. Replace entire chassis assembly. 2. Reprogram base rate.
No ring or bad ring	1. Replace ringer or entire chassis assembly. 2. Verify phone is on hook.
Base rate reached on 5 and 10 cent combination but no on 25 cents (or vice-versa)	1. Replace coin relay-hopper and coin chute assembly. 2. Call operator and verify coin
Noisy line	1. Loose connections at line terminal 2. Check handset 3. Verify ribbon cable is properly seated.
Reaches initial rate, but no tones generated thereafter	Replace entire chassis assembly