SD-69288-01

SHEET INDEX

FIG. NO.	CONTENTS	SHEET NO. PREV. TO ISS.16	SHEET NO. CURRENT ISSUE	ISSUE NO. 16	17	18	19	20	21	22	23	SHEET NO.
	SHEET INDEX	0100	A1	16	17	18	19	20	21	22	23	A1
			A2	16	17	18	19	20	21	22	23	A2
			A3	16	17	18	19	20	21	22	23	A3
	APPARATUS INDEX	0101	B1	16	17	17	17	17	21	21	21	B1
1	FUSE UNIT (MFR.DISC)	0102	C1	16	16	16	16	16	16	16	16	C1
2	CENTRAL OFFICE OR PBX LINE CKT (MFR.DISC)	0103	C2	16	16	16	16	16	16	16	16	C2
3	AUTOMATIC TIE LINE CKT	0104	C3	16	16	16	16	16	16	16	16	C3
4	RINGDOWN TIE LINE CKT	0105	C4	16	16	16	16	16	16	16	23	C4
5	STATION LINE CKT	0106	C5	16	16	16	16	16	16	16	16	C5
6	SELECTOR CKT (MFR.DISC)	0107	C6	16	16	16	16	16	16	16	16	C6
7	SIGNALING UNIT FOR FLASHING LINE LAMPS (3 CKTS) (A & M ONLY)	0108	C7	16	16	16	16	16	16	16	16	C7
8	LAMP FLASHING AND TIMEOUT CKT (MFR. DISC.)	0109	C8	16	16	16	16	16	16	16	16	C8
9	WINK CKT (A&M ONLY)	0110	C9	16	16	16	16	16	16	16	16	C9
10	INTERCOMMUNICATING LINE CKT, RINGING LAMP CKT, NOISE SUPPRESSION CKT AND AUDIBLE SIGNAL CONTROL CKT (A & M ONLY)	0111	C10	16	16	16	16	16	16	16	23	C10
11	C.O. OR PBX LINE CKT (3 CKTS) (MFR DISC)	0112	C11	16	16	16	16	16	16	16	16	C11
12	LAMP FLASHING AND INCOMING SIG.TIME-OUT CKT (MFR DISC)											
13	JOINT USE LINE CKT (MFR. DISC)	0113	C12	16	16	16	16	16	16	16	23	C12
14	SIGNAL TALKING LINK CKT (MFR. DISC.)	0114	C13	16	16	16	16	16	16	16	16	C13
15	STATION SIGNALING CKT (SINGLE TALKING LINK) (9 CKTS) (MFR DISC)											
16	SINGLE TALKING LINK CKT (MFR. DISC.)	0116	C14	16	16	16	16	16	16	16	16	C14
17	STATION SIGNALING CKT (SINGLE TALKING LINK) (9 CKTS) (MFR.DISC)	0115	C15	16	16	16	16	16	16	16	16	C15
18	STATION SIGNALING CIRCUIT (SINGLE TALKING LINK) (3 CKTS)	0117	C16	16	16	16	16	16	16	16	23	C16
19	TRANSFER CKT	0118	C17	16	16	16	16	16	16	16	23	C17
20	PRESET CONFERENCE CKT (MFR. DISC.)	0119	C18	16	16	16	16	16	16	16	16	C18
21	TWO AND FOUR WIRE PRIVATE LINE STATION CKT	0120	C19	16	17	17	17	17	17	17	23	C19
22	TWO AND FOUR WIRE PRIVATE LINE, LINE CKT.	0121	C20	16	17	17	17	17	17	17	17	C20
23	TWO AND FOUR WIRE PRIVATE LINE RINGING RELAY OR POWER SUPPLY CKT	0122	C21	16	16	16	16	16	16	16	16	C21
24	EXECUTIVE CALLING CONTROL & NO-SUCH-NUMBER CKT	0123	C22	16	16	16	16	16	16	16	23	C22
25	TWO TALKING LINK CIRCUIT	0124	C23	16	17	17	17	17	17	17	17	C23

SUPPORTING INFORMATION

CATEGORY	NO.

SHEET INDEX NOTES

1. WHEN CHANGES ARE MADE IN THIS DRAWING, ONLY THOSE SHEETS AFFECTED WILL BE REISSUED.
2. THIS SHEET INDEX WILL BE REISSUED AND BROUGHT UP TO DATE EACH TIME ANY SHEET OF THE DRAWING IS REISSUED, OR A NEW SHEET IS ADDED.
3. THE ISSUE NUMBER ASSIGNED TO A CHANGED OR NEW SHEET WILL BE THE SAME ISSUE NUMBER AS THAT OF THE SHEET INDEX.
4. SHEETS THAT ARE NOT CHANGED WILL RETAIN THEIR EXISTING ISSUE NUMBER.
5. THE LAST ISSUE NUMBER OF THE SHEET INDEX IS RECOGNIZED AS THE LATEST ISSUE NUMBER OF THE DRAWING AS A WHOLE.

DWG ISSUE	CD ISSUE	DATE ISSUED	DRAWN	APPD
—	—	—	—	—
SUPERSEDES ISSUE 15B				
16B	16B	10-28-66	RBB RBB	APS FMR PEG
17D	16B APP1D	8-8-69	RBB RBB	APS FMR PEG HWW
18D	16B APP2D	3-31-70	RJB RJB	AL NDK PPS
19D	17D	6-14-73	HBW —	JCR OFG AFR
20D	17D APP 1D	5-2-74	CDI CAD	RMA OFG JS
21B	18B	12-17-74	OL	RMA OFG JS
22B	18B APP1B	10-30-75	OL	WHH OFG JS
23B	19B	1-5-77	ZEN OL	RMA OFG JS

NOTICE - NOT FOR USE OR DISCLOSURE OUTSIDE THE BELL SYSTEM EXCEPT UNDER WRITTEN AGREEMENT.

SD-69288-01 1K99

STATION SYSTEMS
KEY TELEPHONE UNITS CIRCUITS
PANEL MOUNTED UNITS

AT&TCO STANDARD

SD-69288-01-A1
101 SHEETS

BELL TELEPHONE LABORATORIES INCORPORATED
DWG SIZE 6S
PRINTED IN U.S.A. HNDBK DWG

PRINTED IN U.S.A. C-7999 (5-63)
DISCLOSE PRESS, INC. ADEPROOF 1369/3 1-66

TCI Library- http://www.telephonecollectors.info/

SHEET INDEX

FIG. NO.	CONTENTS	SHEET NO. PREV TO ISS. 16	SHEET NO. CURRENT ISSUE	ISSUE NO. 16	17	18	19	20	21	22	23	24	25	26	27	28	29	30	31	32	33	34	35	36	37	38	39	40	41	42	43	44	45	46	47	48	49	50	51	52	53	54	55	56	57	58	SHEET NO.
26	STATION SIGNALING CKT (TWO TALKING LINKS) (9 CKTS)	0125	C24	16	17	17	17	17	17	17	23																																				C24
27	STATION SIGNALING CKT (TWO TALKING LINKS) (3 CKTS)	0126	C25	16	16	16	16	16	16	16	23																																				C25
28	BUSY SIGNAL AND CAMP-ON CONTROL CKT (MFR. DISC)	0127	C26	16	16	16	16	16	16	16	16																																				C26
29	LONG LINE CKT	0128	C27	16	16	16	16	16	16	22	23																																				C27
30	INWARD CONFERENCE CONTROL CKT (MFR DISC)	0129	C28	16	16	16	16	16	16	16	16																																				C28
31	COMMON AUDIBLE CONTROL CKT (MFR. DISC)	0130	C29	16	16	16	16	16	16	16	16																																				C29
32	BLANK UNIT	0131	C30	16	16	16	16	16	16	16	16																																				C30
33	AUXILIARY RELAY UNIT (MFR. DISC)	0132	C31	16	16	16	16	16	16	16	16																																				C31
34	CO OR PBX LINE CKT (MFR. DISC)	0133	C32	16	16	16	16	16	16	16	16																																				C32
35	CO OR PBX LINE CKT (4 CKTS) (MFR. DISC)	0134	C33	16	16	16	16	16	16	16	16																																				C33
37	SELECTOR CKT	0136	C34	16	16	16	16	20	20	20	23																																				C34
38	LINE AND CONTROL CKT (MFR. DISC.)	0137	C35	16	16	16	16	16	16	16	16																																				C35
39	C.O OR PBX LINE CKT (10 CKTS)(MFR DISC)	0138	C36	16	16	16	16	16	16	16	16																																				C36
40	JOINT USE LINE CKT	0139	C37	16	16	16	16	16	16	16	23																																				C37
41	FLASH, WINK, RING AND TIME OUT CKT (ELECTRO MECHANICAL) MFR DISC	0140	C38	16	16	16	16	16	16	16	16																																				C38
42	SELECTOR & TRANSFER SINGLE LINK CKT	0141	C39	16	17	17	17	17	17	17	23																																				C39
		0142	C40	16	17	17	17	17	17	17	23																																				C40
43	STATION LINE CONCENTRATOR FOR 18 LINES (MFR. DISC)	0143	C41	16	17	17	17	17	17	17	17																																				C41
44	STATION LINE CONCENTRATOR FOR 30 LINES (MFR. DISC)	0144	C42	16	16	16	16	16	16	16	16																																				C42
45	INWARD CONF. CONT. CKT	0153	C43	16	16	16	16	16	16	16	23																																				C43
46	CO OR PBX LINE CKT	0154	C44	16	16	16	16	16	16	16	23																																				C44
47	CO OR PBX LINE CKT (4 CKTS)	0155	C45	16	16	18	18	18	18	18	23																																				C45
48	CO OR PBX LINE CKT (11 CKTS)	0156	C46	16	16	16	16	16	16	16	23																																				C46
49	CO OR PBX LINE(9 CKTS)	0157	C47	16	17	17	17	17	17	17	23																																				C47
50	BRIDGING CKT (MFR DISC)	0158	C48	16	16	16	16	16	16	16	16																																				C48
51	FLASH, WINK, RING AND TIME OUT CKT(ELECTRO-MECHANICAL) (MFR DISC.)	0159	C49	16	17	17	17	17	21	21	21																																				C49
52	AUX RELAY UNIT	0160	C50	16	16	16	16	16	16	16	16																																				C50
53	LINE TRANSFER CKT (MFR DISC)	0161	C51	16	16	16	16	16	16	16	16																																				C51
54	AUXILIARY LINE TRANSFER CKT (MFR-DISC)	0162	C52	16	17	17	17	17	17	17	17																																				C52
55	4-WIRE LINE CKT (TOUCH-TONE CALLING SETS)	0163	C53	16	16	16	16	16	16	16	23																																				C53
56	4-WIRE LINE CKT(ROTARY DIAL SETS) (MFR DISC)	0164	C54	16	16	16	16	16	16	16	16																																				C54
57	FUSE UNIT	0165	C55	16	17	17	17	17	17	17	17																																				C55
58	C.O OR LINE CKT	0166	C56	16	16	16	16	16	16	16	23																																				C56
59	ADD- ON CKT	0167	C57	16	17	17	17	17	17	17	17																																				C57
60	LINE TRANSFER CKT	0168	C58	16	17	17	17	17	17	17	23																																				C58
61	LINE TRANSFER CKT	0169	C59	16	16	16	16	16	16	16	23																																				C59
62	ATTENUATOR PAD	0170	C60	16	16	16	16	16	16	16	16																																				C60
63	TOUCH-TONE ADAPTER RECEIVER CKT (MFR DISC)	0171	C61	16	17	17	17	17	17	17	17																																				C61
64	TOUCH-TONE ADAPTER SELECTOR CKT (MFR DISC)	0172	C62	16	17	17	17	17	17	17	17																																				C62

DRAWING ISSUE	
16B	18B 18B REG
17D	18B 18B 411
18D	

KEY TELEPHONE UNITS CIRCUITS

SD-69288-01-A2

BELL TELEPHONE LABORATORIES INCORPORATED

DWG SIZE 6S

PRINTED IN U.S.A.

TCI Library- http://www.telephonecollectors.info/

SHEET INDEX

FIG. NO.	CONTENTS	SHEET NO. PREV. TO ISS. 16	SHEET NO. CURRENT ISSUE	ISSUE NO. 16	17	18	19	20	21	22	23	24	25	26	27	28	29	30	31	32	33	34	35	36	37	38	39	40	41	42	43	44	45	46	47	48	49	50	51	52	53	54	55	56	57	58	SHEET NO.
65	4-WIRE PRIVATE LINE STATION CKT	0173	C63	16	16	16	16	16	16	16	16																																				C63
66	RINGUP RELAY CKT	0174	C64	16	17	17	17	17	17	17	23																																				C64
67	TONE CUTOFF CKT (MFR DISC)	0175	C65	16	16	16	16	16	16	16	16																																				C65
68	STATION SEL CKT (MFR DISC)	0176	C66	16	17	17	17	17	17	17	17																																				C66
69	STATION SELECTION & AMPLIFIER CKT (MFR. DISC)	0177	C67	16	16	16	16	16	16	16	16																																				C67
70	4-WIRE LINE CKT	0178	C68	16	16	16	16	16	16	16	16																																				C68
71	ACTIVE SIDE-TONE NETWORK FOR 4-WIRE LINES	0179	C69	16	16	16	16	16	16	16	16																																				C69
72	LINE TRANSFER CKT	0180	C70	16	16	16	16	16	16	16	16																																				C70
73	ADAPTER UNIT (MFR DISC)	0181	C71	16	16	16	16	16	16	16	16																																				C71
74	MULTI-LINE EXCLUSION CKT (MFR DISC)	0185	C72	16	16	16	16	16	16	16	16																																				C72
75	TRANSFER CKT	0183	C73	16	16	16	16	16	16	16	23																																				C73
76	BRIDGING CKT	0184	C74	16	16	16	16	16	16	16	16																																				C74
77	ADAPTER UNIT	0186	C75	16	16	16	16	16	16	16	16																																				C75
78	BUSY SIGNAL AND CAMP-ON CONTROL CKT		C76	16	17	17	17	17	17	17	23																																				C76
79	PRESET CONFERENCE CKT AND CONFERENCE TIME-OUT CKT																																														
80	TRANSFER CKT		C77	16	16	16	16	16	16	16	23																																				C77
81	4-WIRE LINE CKT (ROTARY DIAL SETS) (MFR. DISC)																																														
82	4-WIRE PRIVATE LINE STATION CKT		C78	16	16	16	16	16	16	16	23																																				
83	TONE CUTOFF & LINE CURRENT LIMITING CKTS																																														
84	STATION SELECTOR CKT		C79	16	16	16	16	16	16	16	16																																				C79
85	COMMON AUDIBLE CONTROL CKT		C80	16	16	16	16	16	16	16	23																																				C80
86	4-WIRE LINE CKT (ROTARY DIAL SETS)																																														
87	COMMON VISUAL AND AUDIBLE SIGNAL CONTROL CKT		C81	16	17	17	17	17	17	17	23																																				C81
88	BLANK UNIT WITH RELAY MOUNTINGS																																														
89	TOUCH-TONE ADAPTER CKT FOR OPERATION WITH 207 TYPE SELECTOR		C82	16	17	17	17	17	17	17	17																																				C82
	SHEET CANCELLED ON DWG ISS 17D	0135 1082	C83																																												C83
91	TOUCH-TONE ADAPTER CKT SUB CIRCUITS		C84	16	17	17	17	17	17	17	17																																				C84
			C85	16	17	17	17	17	17	17	17																																				C85
92	ADAPTER UNIT (MD)		C86	16	17	17	17	17	17	17	17																																				C86
93	STATION LINE CONCENTRATOR FOR 18 LINES		C87	16	17	17	17	17	17	17	23																																				C87
94	STATION LINE CONCENTRATOR FOR 30 LINES		C88	16	16	16	16	16	16	16	23																																				C88
95	AUX TRANSFER CKT		C89	16	17	17	17	17	17	17	17																																				C89
96	271A KTU		C90			18	18	18	18	18	18																																				C90
97	272A KTU		C91				19	19	19	19	19																																				C91
98	FLASH, WINK, RING AND TIME OUT CKT (ELECTRO-MECH)		C92						21	21	21																																				C92
	CIRCUIT REQUIREMENTS	0145-0152	D1	16	16	16	16	16	16	16	16																																				D1
			D2	16	17	17	17	17	17	17	17																																				D2
			D3	16	17	17	17	17	17	17	23																																				D3
			D4	16	17	17	17	17	17	17	17																																				D4
			D5	16	17	17	17	17	17	17	17																																				D5
			D6	16	16	16	16	16	16	16	23																																				D6

DRAWING ISSUE
16B
17D
18D

KEY TELEPHONE UNITS CIRCUITS

SD-69288-01-A3

BELL TELEPHONE LABORATORIES INCORPORATED

DWG SIZE 6S

PRINTED IN U.S.A.

TCI Library- http://www.telephonecollectors.info/

APPARATUS INDEX

K.T.U. NO.	DESCRIPTION	PANEL WIDTH INCHES	PANEL WIDTH 7/16 MODULES	RATING	REPLACED BY	SHEET NO. PREV. TO ISSUE 16	SHEET NO. CURRENT
201B	FUSE UNIT	2-5/32	5	MFR DISC	201C KTU	0102	C1
201C	FUSE UNIT	2-5/32	5	AT&TCO STD		0165	C55
202B	CENT.OFF. OR PBX LINE CKT	3-1/32	7	MFR DISC	202C KTU	0103	C2
202C	CENT.OFF. OR PBX LINE CKT	2-19/32	6	MFR DISC	202D KTU	0133	C32
202D	CENT.OFF. OR PBX LINE CKT	2-19/32	6	AT&TCO STD		0154	C44
203A	AUTOMATIC TIE LINE CKT	3-15/32	8	AT&TCO STD		0104	C3
204A	RINGDOWN TIE LINE CKT	3-29/32	9	AT&TCO STD		0105	C4
205A	STATION LINE CKT	3-29/32	9	AT&TCO STD		0106	C5
207B	SELECTOR CKT	5-7/32	12	MFR DISC	207C KTU	0107	C6
207C	SELECTOR CKT	5-7/32	12	AT&TCO STD		0136	C34
208A	CENT.OFF. OR PBX LINE CKTS (3 CKTS) WITH LAMP FLASHING & INCOMING SIGNAL TIME-OUT CKT	3-15/32	8	A&M ONLY		0108	C7
209A	LAMP FLASHING AND TIME-OUT CKT	4-25/32	11	MFR DISC	232B KTU	0109	C8
210A	WINK CKT	2-19/32	6	A&M ONLY		0110	C9
211A	INTERCOMMUNICATING LINE CKT,RINGING LAMP CKT NOISE SUPPRESSION CKT AND AUDIBLE SIGNAL CONTROL CKT	3-1/32	7	A&M ONLY		0111	C10
212A	CENTRAL OFFICE OR PBX LINE CKT (3 CKTS) WITH LAMP FLASHING AND INCOMING SIGNAL TIME-OUT CKTS.	9-5/32	21	MFR DISC		0112	C11
213A	JOINT USE LINE CKT	4-25/32	11	MFR DISC	213B KTU	0113	C12
213B	JOINT USE LINE CKT	4-25/32	11	AT&TCO STD		0139	C37
214A	SIGNAL TALKING LINK CKT WITH NINE STATION SIGNALING CKTS.	14-13/32	33	MFR DISC	214B KTU	0114	C13
214B	SINGLE TALKING LINK CKT WITH NINE STATION SIGNALING CKT	16-15/32	37	MFR DISC	234A KTU	0116	C14
						0115	C15
215A	STATION SIGNALING CKT (SINGLE TALKING LINK) (3 CKTS)	3-29/32	9	AT&TCO STD		0117	C16
216A	TRANSFER CKT	3-1/32	7	AT&TCO STD		0118	C17
216B	TRANSFER CKT	3-1/32	7	AT&TCO STD		0183	C73
217A	PRESET CONFERENCE CKT	3-1/32	7	MFR DISC	217B KTU	0119	C18
217B	PRESET CONFERENCE CKT AND CONFERENCE TIME-OUT CKT	3-15/32	8	AT&TCO STD			C76
218A	TWO AND FOUR-WIRE PRIVATE LINE STATION CKT	3-1/32	7	AT&TCO STD		0120	C19
219A	TWO AND FOUR-WIRE PRIVATE LINE LINE CKT	3-1/32	7	AT&TCO STD		0121	C20
220A	TWO-AND FOUR-WIRE PRIVATE LINE RINGING RELAY OR POWER SUPPLY CKT	3-1/32	7	AT&TCO STD		0122	C21
221A	EXECUTIVE CALLING CONTROL AND NO-SUCH NUMBER CKT	3-15/32	8	AT&TCO STD		0123	C22
222A	TWO TALKING LINK CKT WITH NINE STATION SIGNALING CKTS	23		AT&TCO STD		0124	C23
						0125	C24
223A	STATION SIGNALING CKT (TWO TALKING LINKS) (3 CKTS)	5-21/32	13	AT&TCO STD		0126	C25
224A	BUSY SIGNAL AND CAMP-ON CONTROL CKT	3-15/32	8	MFR DISC	224B KTU	0127	C26
224B	BUSY SIGNAL AND CAMP-ON CONTROL CKT	3-15/32	8	AT&TCO STD			C76
225A	LONG LINE CKT	2-5/32	5	AT&TCO STD		0128	C27
226A	INWARD CONFERENCE CONTROL CKT	3-15/32	8	MFR DISC	226B KTU	0129	C28
226B	INWARD CONFERENCE CONTROL CKT	3-15/32	8	AT&TCO STD		0153	C43
227A	COMMON AUDIBLE CONTROL CKT	3-1/32	7	MFR DISC	227B KTU	0130	C29
227B	COMMON AUDIBLE CONTROL CKT	3-1/32	7	AT&TCO STD			C80
228A	BLANK UNIT	3-15/32	8	AT&TCO STD		0131	C30
229A	AUXILIARY RELAY UNIT	3-1/32	7	MFR DISC	229B KTU	0132	C31
229B	AUXILIARY RELAY UNIT	3-1/32	7	AT&TCO STD		0160	C50
230A	CENT.OFF OR PBX LINE CKT (4 CKTS)	8-9/32	19	MFR DISC	230B KTU	0134	C33
230B	CENT.OFF OR PBX LINE CKT (4 CKTS)	8-9/32	19	AT&TCO STD		0155	C45
231A	LINE AND CONTROL CKT	5-21/32	13	MFR DISC		0137	C35
232A	ELECTRO-MECHANICAL FLASH,WINK,RING AND TIME OUT CKT	3-15/32	8	MFR DISC	232B KTU	0140	C38
232B	ELECTRO-MECHANICAL FLASH,WINK,RING AND TIME OUT CKT	3-15/32	8	MFR DISC	232C KTU	0159	C49

K.T.U. NO.	DESCRIPTION	PANEL WIDTH INCHES	PANEL WIDTH 7/16 MODULES	RATING	REPLACED BY	SHEET NO. PREV. TO ISSUE 16	SHEET NO. CURRENT
232C	ELECTRO-MECH FLASH,WINK,RING & TIME OUT CKT	3-15/32	8	AT&TCO STD			C90
233A	CENT. OFF. OR PBX LINE CKT (10 CKTS)	23		MFR DISC	239A KTU	0138	C16
234A	SEL & TRANSFER SINGLE LINK CKT (9 CKTS)	23		AT&TCO STD		0141	C39
						0142	C40
235A	STATION LINE CONCENTRATOR FOR 18 LINES	6-3/32	14	MFR DISC	235B KTU	0143	C41
235B	STATION LINE CONCENTRATOR FOR 18 LINES	6-3/32	14	AT&TCO STD			C87
236A	STATION LINE CONCENTRATOR FOR 30 LINES	8-25/32	20	MFR DISC	236B KTU	0144	C42
236B	STATION LINE CONCENTRATOR FOR 30 LINES	8-25/32	20	AT&TCO STD			C88
237A	BRIDGING CKT	2-19/32	6	MFR DISC	237B KTU	0158	C48
237B	BRIDGING CKT	2-19/32	6	AT&TCO STD		0184	C74
238A	CO OR PBX LINE CKT (9 CKTS)	23		AT&TCO STD		0157	C47
239A	CO OR PBX LINE CKT (11 CKTS)	23		AT&TCO STD		0156	C46
240A	LINE TRANSFER CKT	6-31/32	16	MFR DISC	240B KTU	0161	C51
240B	LINE TRANSFER CKT	6-31/32	16	AT&TCO STD		0168	C58
241A	AUXILIARY LINE TRANSFER CKT	3-1/32	7	(MFR. DISC)	241B KTU	0162	C52
242A	4-WIRE LINE CKT (TOUCH-TONE CALLING SETS)	8-9/32	19	AT&TCO STD		0163	C53
243A	4-WIRE LINE CKT (ROTARY DIAL SETS)	8-9/32	19	MFR DISC	243B KTU	0164	C54
243B	4-WIRE LINE CKT (ROTARY DIAL SETS)	8-9/32	19	MFR DISC	243C KTU		C77
243C	4-WIRE LINE CKT (ROTARY DIAL SETS)	8-9/32	19	AT&TCO STD			C80
244A	LINE TRANSFER CKT	6-31/32	16	AT&TCO STD		0169	C59
245A	ATTENUATOR PAD	2-5/32	5	AT&TCO STD		0170	C60
246A	CANCELLED						
247A	TOUCH-TONE ADAPTER, RECEIVER CKT	9-5/32	21	(MFR. DISC)	247B KTU	0171	C61
	TOUCH-TONE ADAPTER, SELECTOR CKT					0172	C62
247B	TOUCH-TONE ADAPTER CKT FOR OPERATION WITH 207 TYPE SELECTOR	7-13/32	17	AT&TCO STD			C82
	TOUCH-TONE ADAPTER CKT FOR OPERATION WITH 407A TYPE SELECTOR (CANCELED)	7 13/32	17	AT&TCO STD			C83
	SUB CIRCUITS, TOUCH-TONE ADAPTER CKT	7 13/32	17	AT&TCO STD			C84
							C85
248A	4-WIRE PRIVATE LINE STATION CKT	3-15/32	8	AT&TCO STD		0173	C63
248B	4-WIRE PRIVATE LINE STATION CKT	4-25/32	11	AT&TCO STD			C78
249A	CO OR LINE CKT (SWITCHING SYS NO.400)	2-19/32	6	AT&TCO STD		0166	C56
250A	ADD-ON CKT (SWITCHING SYS NO.400)	3-15/32	8	AT&TCO STD		0167	C57
251A	RINGUP RELAY CKT	2-5/32	5	AT&TCO STD		0174	C64
252A	TONE CUTOFF CKT	2-5/32	5	MFR DISC	252B KTU	0175	C65
252B	TONE CUTOFF & LINE CURRENT LIMITING CKTS	2-5/32	5	AT&TCO STD			C78
253A	STATION SELECTION CKT	6-31/32	16	MFR DISC		0176	C66
253B	STATION SELECTION CKT	6-31/32	16	AT&TCO STD			C79
254A	STATION SELECTION & AMPLIFIER CKT	5-21/32	13	MFR. DISC.		0177	C67
255A	4-WIRE LINE CKT	6-3/32	14	AT&TCO STD		0178	C68
256A	ACTIVE SIDE-TONE NETWORK FOR 4-WIRE LINES	2-5/32	5	AT&TCO STD		0179	C69
257A	CANCELLED						
258A	LINE TRANSFER CKT	4-25/32	11	AT&TCO STD		0180	C70
259A	ADAPTER UNIT	3-29/32	9	MFR DISC	259B KTU	0181	C71
259B	ADAPTER UNIT	3-29/32	9	AT&TCO STD		0186	C75
259C	ADAPTER UNIT	3-29/32	9	(MFR. DISC)			C86
260A	MULTI-LINE EXCLUSION CKT	3-29/32	9	MFR DISC		0185	C72
261A	CANCELLED						
262A	TRANSFER CKT	3-15/32	8	AT&TCO STD			C77
263A	COMMON VISUAL AND AUDIBLE SIGNAL CONTROL CKT	3-1/32	7	AT&TCO STD			C81
264A	CANCELLED						
265A	BLANK UNIT WITH RELAY MOUNTINGS	3-1/32	7	AT&TCO STD			C81
241B	AUXILIARY LINE TRANSFER CKT	3-1/32	7	AT&TCO STD			C89

DRAWING ISSUE	
16B	P88 P88 P86
17D	P88 P88 441

KEY TELEPHONE UNITS CIRCUITS

SD-69288-01-BI

BELL TELEPHONE LABORATORIES INCORPORATED

DWG SIZE 6S

PRINTED IN U.S.A.

TCI Library- http://www.telephonecollectors.info/

DRAWING ISSUE	
8A	
12B	RJT ANC DKJ
16B	RBB RBX FEG

FIG. 1 (MFR DISC.)

FUSE UNIT

201B KEY TELEPHONE UNIT

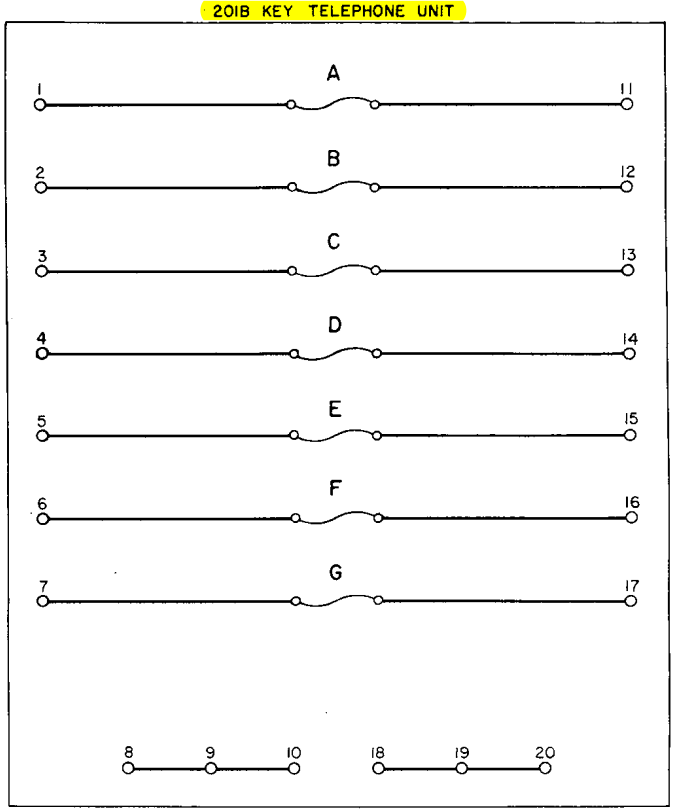

EQUIPMENT NOTES:

201. THIS KEY TEL UNIT IS DESIGNED PRIMARILY FOR USE IN KEY TEL SYSTEM NO. 1A1, SD-69203-01, J53021.

202. THIS KEY TEL UNIT IS 5 MODULES (2-5/32 IN.) WIDE.

KEY TELEPHONE UNITS CIRCUITS (201B KTU)	SD-69288-01-C1
BELL TELEPHONE LABORATORIES INCORPORATED — DWG SIZE 3S	PRINTED IN U. S. A.

TCI Library- http://www.telephonecollectors.info/

DRAWING ISSUE	
8A	SV
11A	JWB DHC
12B	RJT AMC MV
14B	PG DHC ARM
16B	DRB RMS REG

FIG. 2 (MFR DISC.)

CENTRAL OFFICE OR PBX LINE CIRCUIT

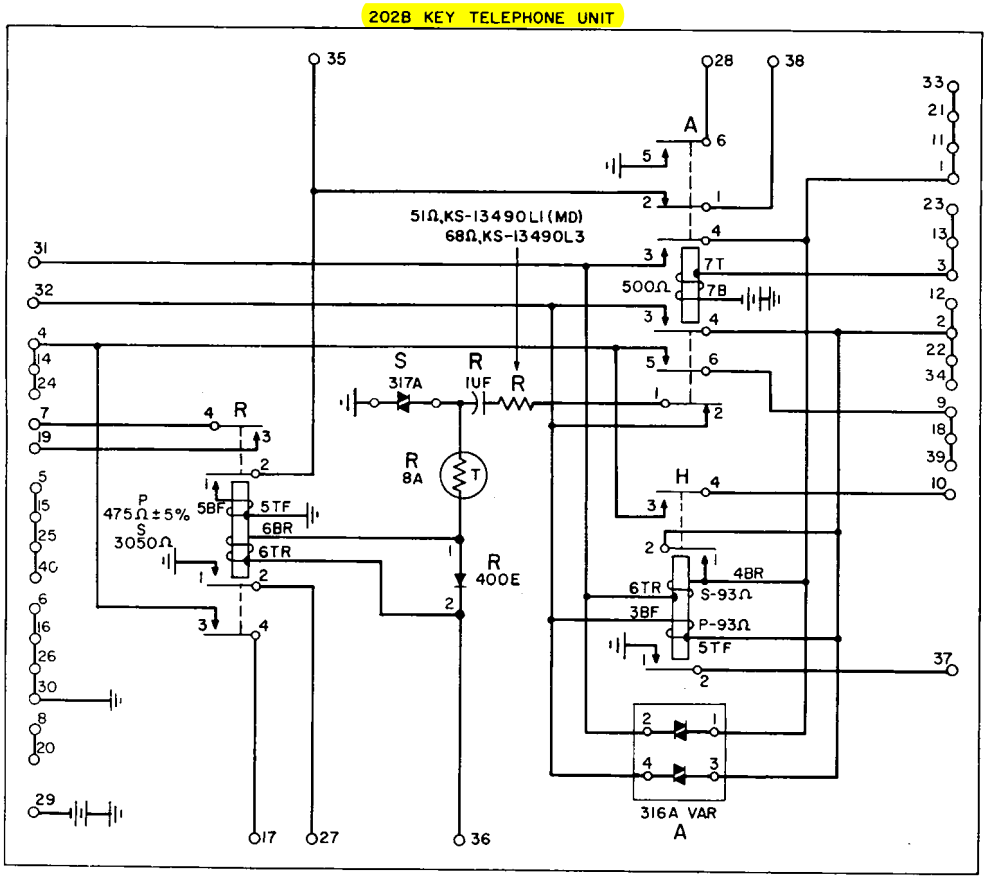

EQUIPMENT NOTES:

201. THIS KEY TEL UNIT IS DESIGNED FOR USE PRIMARILY IN KEY TEL SYSTEM NO. 1A1, SD-69203-01, J53021.

202. THIS KEY TEL UNIT IS 7 MODULES (3-1/32 IN.) WIDE.

20 V NOMINAL
(14-26 V)

KEY TELEPHONE UNITS CIRCUITS
(202B KTU)

SD-69288-01-C2

BELL TELEPHONE LABORATORIES
INCORPORATED

DWG SIZE 3S

PRINTED IN U. S. A.

TCI Library- http://www.telephonecollectors.info/

DRAWING ISSUE	
8A	STM
11A	FWR DHC
16B	RBB RBB REG.

FIG. 3

AUTOMATIC TIE LINE CIRCUIT

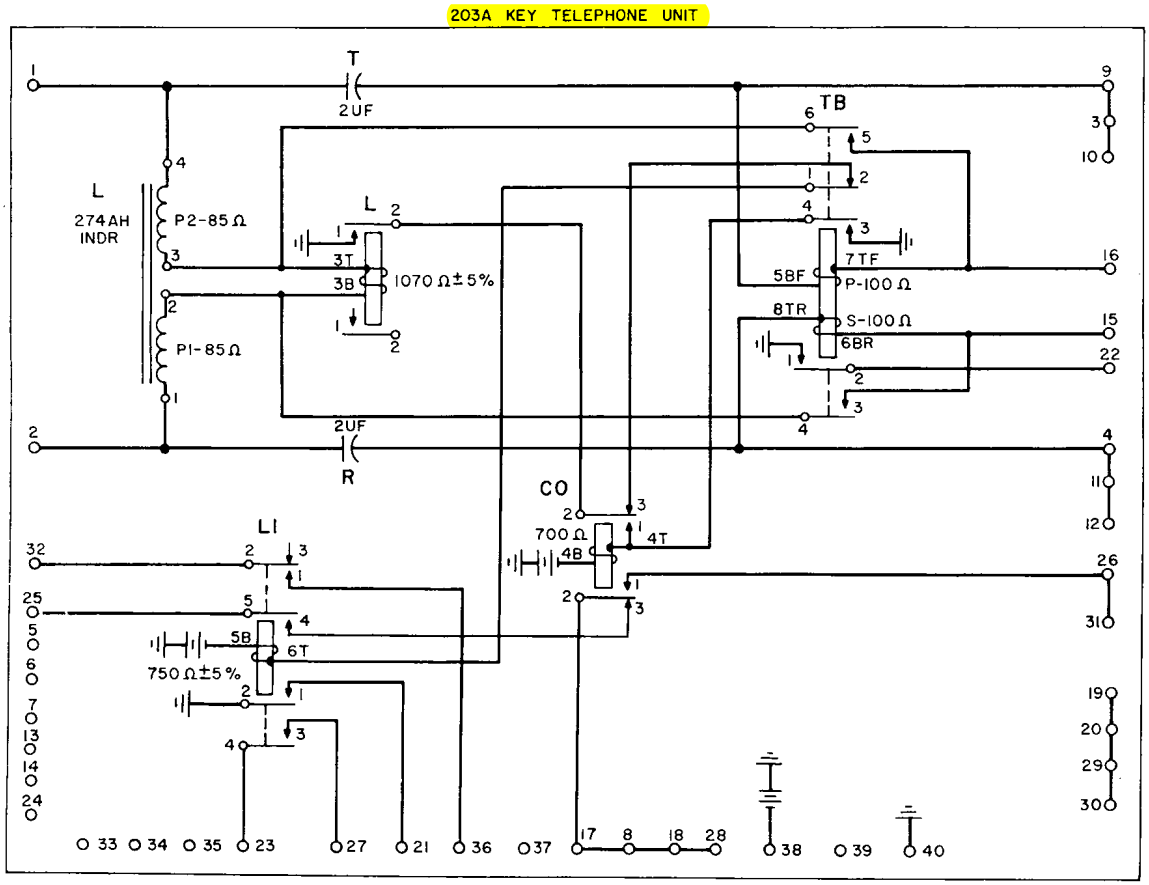

EQUIPMENT NOTES:
201. THIS KEY TEL UNIT IS DESIGNED FOR USE PRIMARILY IN KEY TEL SYSTEM NO. 1A1, SD-69203, J53021.
202. THIS KEY TEL UNIT IS 8 MODULES (3-15/32 IN) WIDE.

20 V NOMINAL
(14-26V)

KEY TELEPHONE UNITS CIRCUITS (203A KTU)	SD-69288-01-C3
BELL TELEPHONE LABORATORIES INCORPORATED — DWG SIZE 3S — PRINTED IN U. S. A.	

TCI Library- http://www.telephonecollectors.info/

DRAWING ISSUE	
8A	
11A	
12B	
16B	

FIG. 4

RINGDOWN TIE LINE CIRCUIT

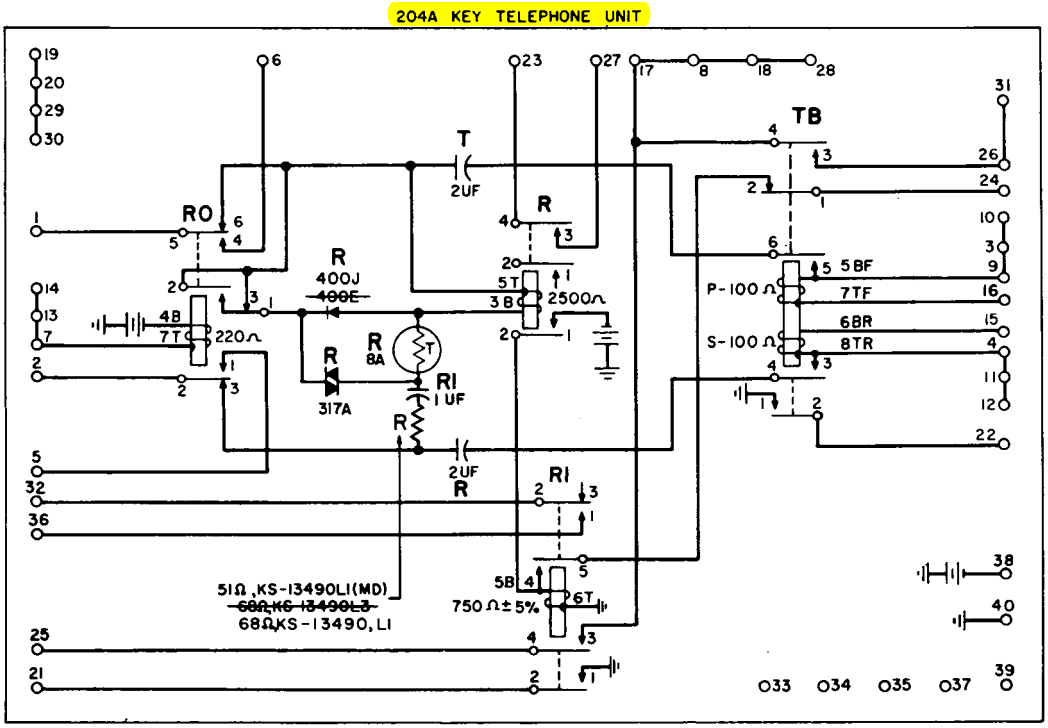

EQUIPMENT NOTES:

201. THIS KEY TEL UNIT IS DESIGNED FOR USE PRIMARILY IN KEY TEL SYSTEM NO. 1A1, SD-69203-01, J 53021.
202. THIS KEY TEL UNIT IS 9 MODULES (3-29/32 IN.) WIDE.

20V NOMINAL
(14-26V)

KEY TELEPHONE UNITS CIRCUITS
(204A KTU)

SD-69288-01-C4

BELL TELEPHONE LABORATORIES INCORPORATED

SIZE 3S

PRINTED IN U.S.A.

TCI Library- http://www.telephonecollectors.info/

DRAWING ISSUE	
8A	ST/WA
16B	RBB RBB PEG

FIG. 5
STATION LINE CIRCUIT

205A KEY TELEPHONE UNIT

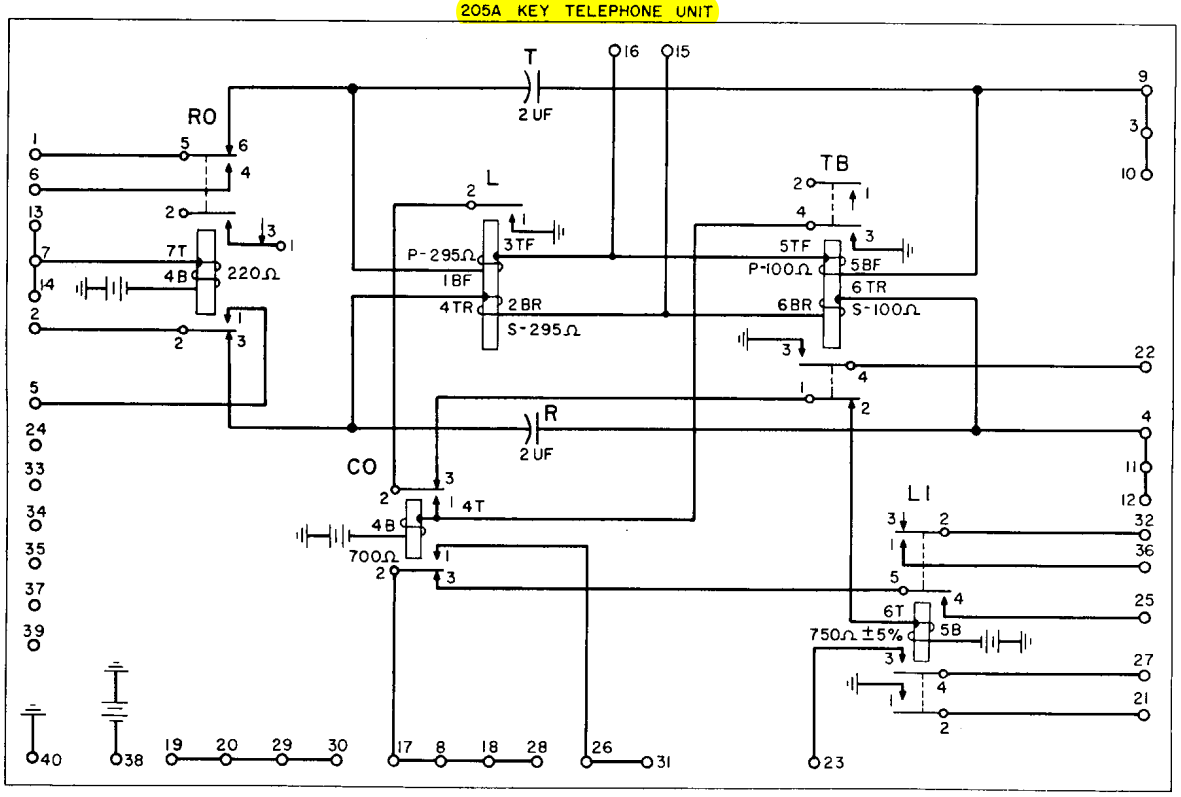

EQUIPMENT NOTES:
201. THIS KEY TELEPHONE UNIT IS DESIGNED PRIMARILY FOR USE IN KEY TEL SYSTEM NO. 1A1, SD-69203-01, J53021.
202. THIS KEY TELEPHONE UNIT IS 9 MODULES (3-29/32 IN.) WIDE.

20 V NOMINAL
(14-26 V)

KEY TELEPHONE UNITS CIRCUITS (205A KTU)	SD-69288-01-C5
BELL TELEPHONE LABORATORIES INCORPORATED — DWG SIZE 3S — PRINTED IN U. S. A.	

TCI Library- http://www.telephonecollectors.info/

DRAWING ISSUE	
8A	-
16B	RBB RBB PEG

FIG. 6 (MFR DISC.)
SELECTOR CIRCUIT

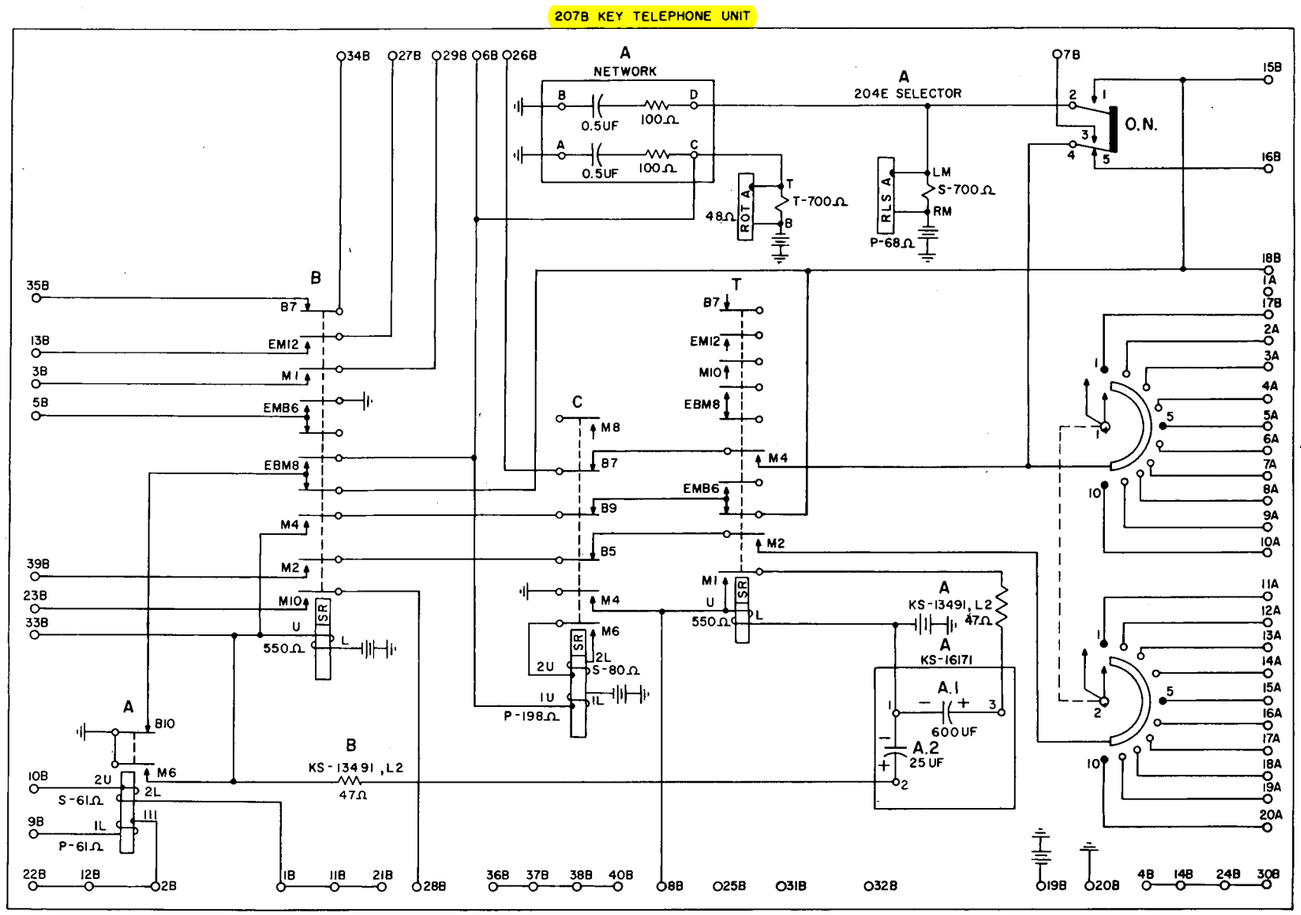

EQUIPMENT NOTES:
201. THIS KEY TEL UNIT IS DESIGNED FOR USE PRIMARLY IN KEY TEL SYSTEM NO. 6A, SD-69286-01, J53023
202. THIS KEY TEL UNIT IS 12 MODULES (5-7/32 IN.) WIDE.

24V NOMINAL
(18-26V)

KEY TELEPHONE UNITS CIRCUITS
(207B KTU)

SD-69288-01-C6

BELL TELEPHONE LABORATORIES INCORPORATED

DWG SIZE 6S

PRINTED IN U.S.A.

TCI Library- http://www.telephonecollectors.info/

DRAWING ISSUE	
8A	STW-A -
14B	EFS DHC RRM
16B	RBB RBD PEG

FIG. 7 (A & M ONLY)

SIGNALING UNIT FOR FLASHING LINE LAMPS

SEE NOTE 203

208A KEY TELEPHONE UNIT

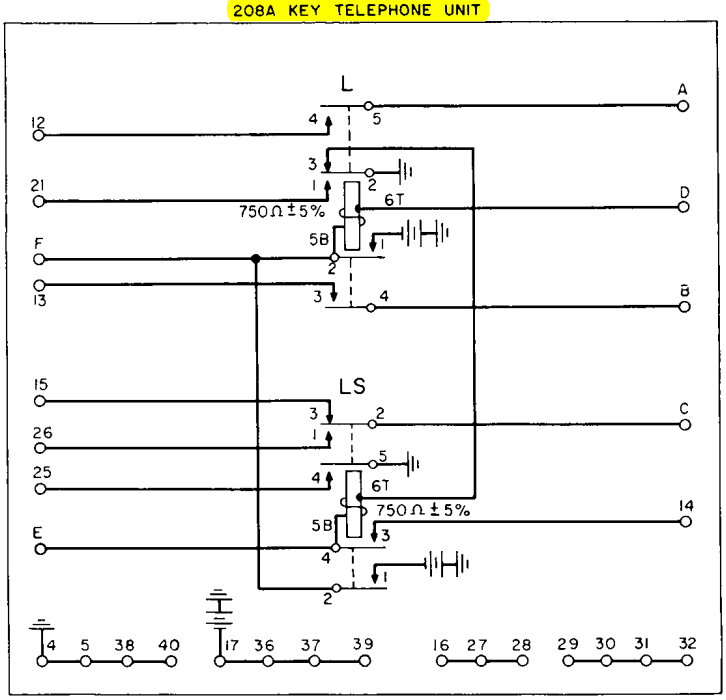

EQUIPMENT NOTES:

201. THIS KEY TEL UNIT IS DESIGNED FOR USE IN KEY TEL SYSTEM NO. 1A1, SD-69199-01, J53021.

202. THIS KEY TEL UNIT IS 8 MODULES (3-15/32 IN.) WIDE.

203.

REFERENCE DESIGNATION	PUNCHING		
	CKT 1	CKT 2	CKT 3
A	1	6	9
B	2	7	10
C	33	34	35
D	3	8	11
E	18	19	20
F	22	23	24

20V NOMINAL (14-26V)

KEY TELEPHONE UNITS CIRCUITS (208A KTU)

SD-69288-01-C7

BELL TELEPHONE LABORATORIES INCORPORATED

DWG SIZE 3S

PRINTED IN U. S. A.

TCI Library- http://www.telephonecollectors.info/

FIG. 8 (MFR DISC.)

LAMP FLASHING AND TIME-OUT CIRCUIT

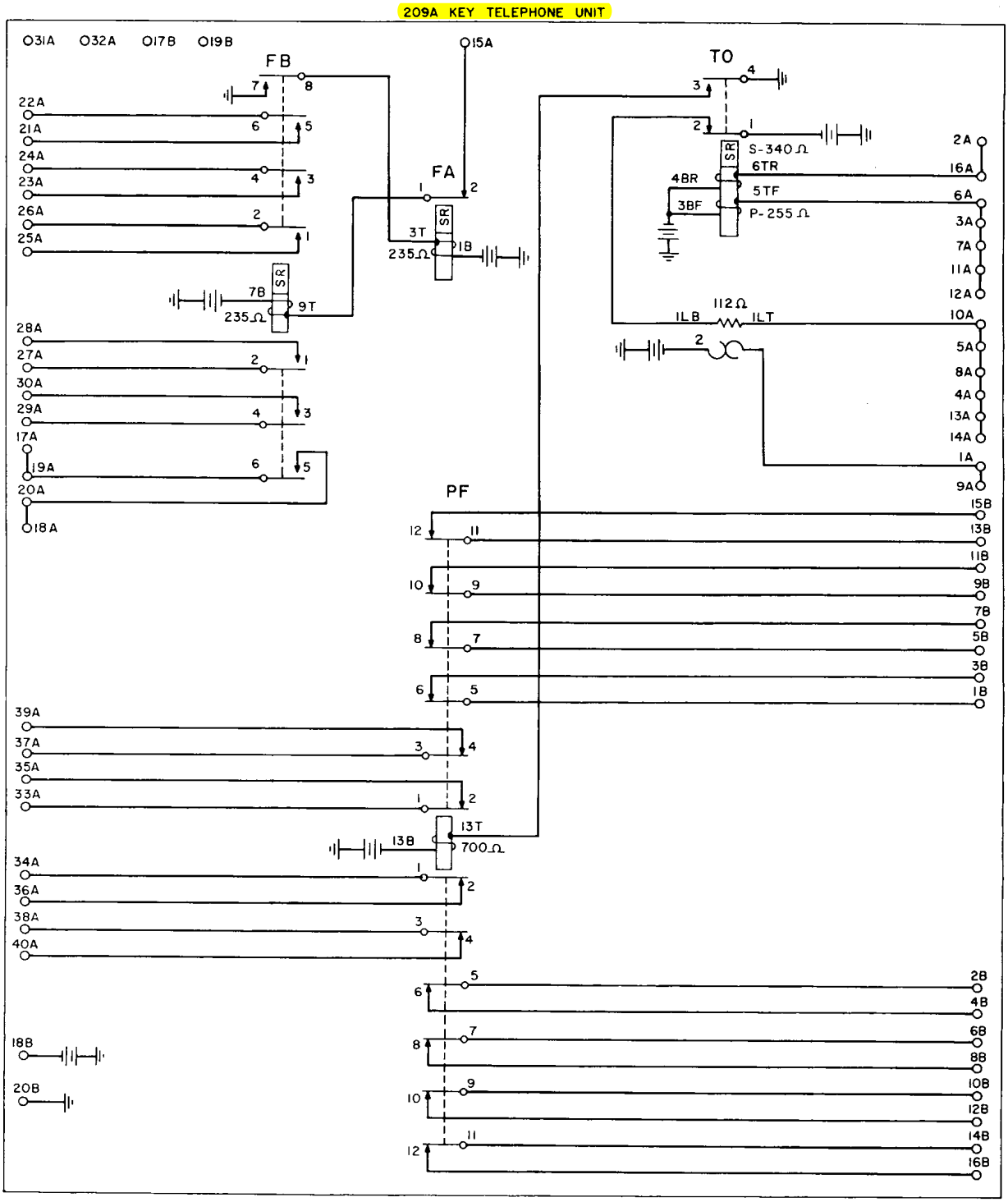

EQUIPMENT NOTES:

201. THIS KEY TEL UNIT IS DESIGNATED FOR USE PRIMARILY IN KEY TEL SYSTEM NO. 1A1, SD-69203-01, J53021.

202. THIS KEY TEL UNIT IS 11 MODULES (4-25/32 IN.) WIDE.

20V NOMINAL
(14-26V)

DRAWING ISSUE	
8A	ST/WA -
11A	DWB DHC
14B	PG DHC ARM
16B	PRB PRB PEG

KEY TELEPHONE UNITS CIRCUITS
(209A KTU)

SD-69288-01-C8

BELL TELEPHONE LABORATORIES INCORPORATED

DWG SIZE 3S

PRINTED IN U.S.A.

TCI Library- http://www.telephonecollectors.info/

DRAWING ISSUE	
8A	ST/WA
14B	PG DHC ARM
16B	RBB RBB PEG.

FIG. 9 (A & M ONLY)

WINK CIRCUIT

210A KEY TELEPHONE UNIT

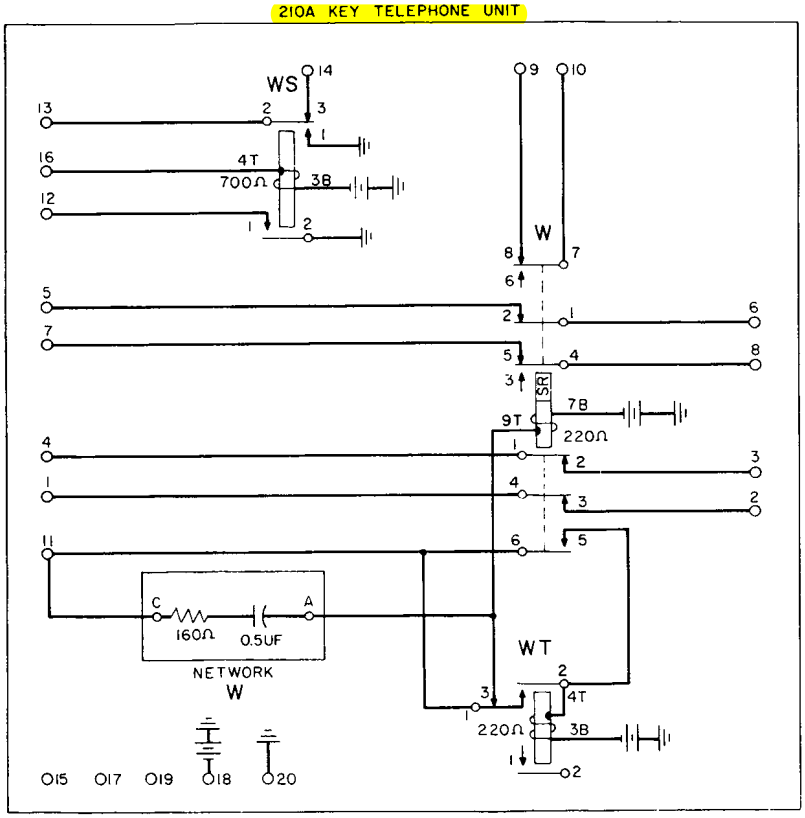

EQUIPMENT NOTES:

201. THIS KEY TEL UNIT IS DESIGNED FOR USE PRIMARILY IN KEY TEL SYSTEM NO. 1A1, SD-69203-01, J53021.

202. THIS KEY TEL UNIT IS 6 MODULES (2-19/32 IN.) WIDE.

20V NOMINAL
(14-26V)

KEY TELEPHONE UNITS CIRCUITS (210A KTU)	SD-69288-01-C9
BELL TELEPHONE LABORATORIES INCORPORATED — DWG SIZE 3S	PRINTED IN U. S. A.

TCI Library- http://www.telephonecollectors.info/

FIG. 10 (A & M ONLY)

INTERCOMMUNICATING LINE CIRCUIT, RINGING LAMP CIRCUIT,
NOISE SUPPRESSION CIRCUIT AND AUDIBLE SIGNAL CONTROL CIRCUIT

211A KEY TELEPHONE UNIT

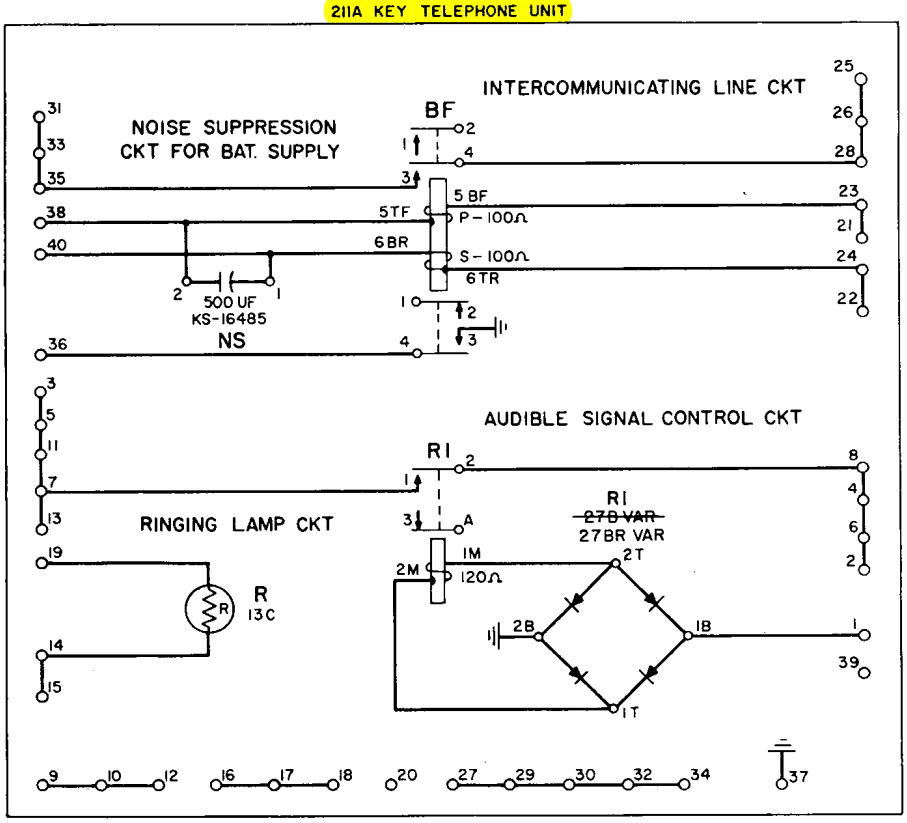

EQUIPMENT NOTES:
201. THIS KEY TEL UNIT IS DESIGNED FOR USE PRIMARILY IN KEY TEL SYSTEM NO. 1A1, SD-69203-01, J53021.
202. THIS KEY TEL UNIT IS 7 MODULES (3-1/32 IN.) WIDE.

20V NOMINAL
(14-26V)

DRAWING ISSUE	
8A	
11A	
14B	
16B	

KEY TELEPHONE UNITS CIRCUITS
(211A KTU)

SD-69288-01-C10

BELL TELEPHONE LABORATORIES INCORPORATED

DWG SIZE 3S

PRINTED IN U. S. A.

TCI Library- http://www.telephonecollectors.info/

FIG. 11 (MFR DISC.)

CENTRAL OFFICE OR PBX LINE CIRCUIT

SEE NOTE 204

PART OF 212A KEY TELEPHONE UNIT

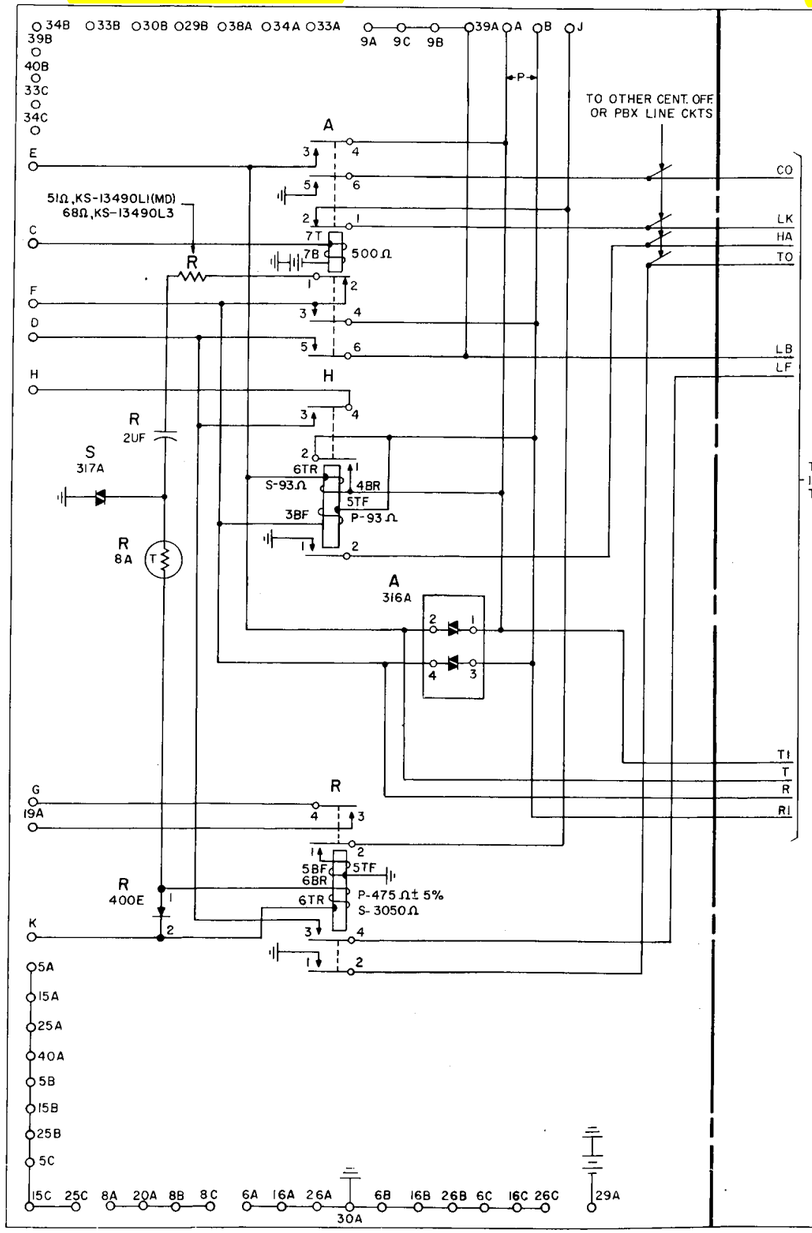

FIG. 12 (MFR DISC.)

LAMP FLASHING AND INCOMING SIGNAL TIME-OUT CIRCUIT

PART OF 212A KEY TELEPHONE UNIT

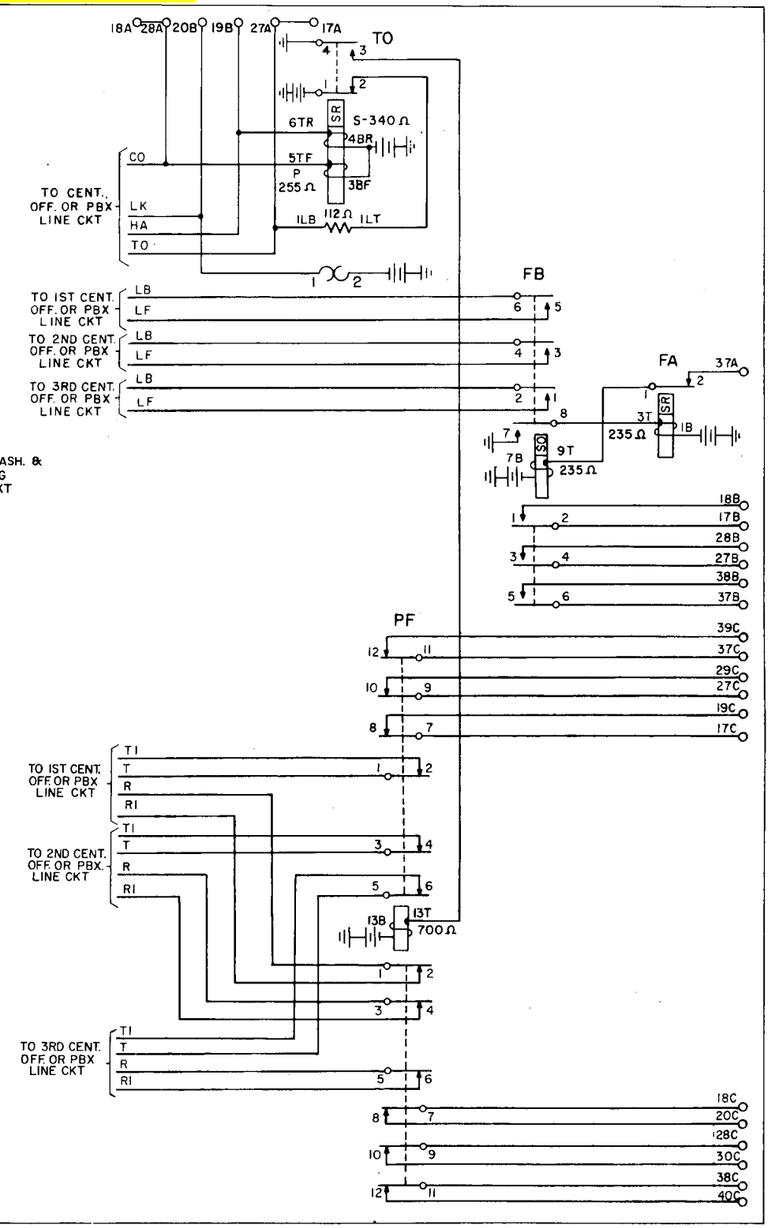

201. THIS KEY TEL UNIT IS DESIGNED FOR USE PRIMARILY IN KEY TEL SYSTEMS NO. 1A1, SD-69203-01, J53021.

202 THIS KEY TEL UNIT IS 21 MODULES (9-5/32 IN.) WIDE.

203 SUFFIX AFTER NUMBER OF PUNCHING INDICATES TERMINAL STRIP.

204.

REFERENCE DESIGNATION	PUNCHING		
	CKT 1	CKT 2	CKT 3
A	1A, 11A, 21A	1B, 11B, 21B	1C, 11C, 21C
B	2A, 12A, 22A	2B, 12B, 22B	2C, 12C, 22C
C	3A, 13A, 23A	3B, 13B, 23B	3C, 13C, 23C
D	4A, 14A, 24A	4B, 14B, 24B	4C, 14C, 24C
E	31A	31B	31C
F	32A	32B	32C
G	7A	7B	7C
H	10A	10B	10C
J	35A	35B	35C
K	36A	36B	36C

DRAWING ISSUE	
8A	EFS/LB -
11A	WB DISC
12B	RIT DISC DEV
14B	EFS DHC ARM
16B	WB DAB DES.

KEY TELEPHONE UNITS CIRCUITS (212A KTU)

SD-69288-01-C11

BELL TELEPHONE LABORATORIES INCORPORATED

DWG SIZE 6S

PRINTED IN U. S. A.

C-7420 (3-57)

TCI Library- http://www.telephonecollectors.info/

FIG. 13 (MFR DISC.)

JOINT USE LINE CIRCUIT

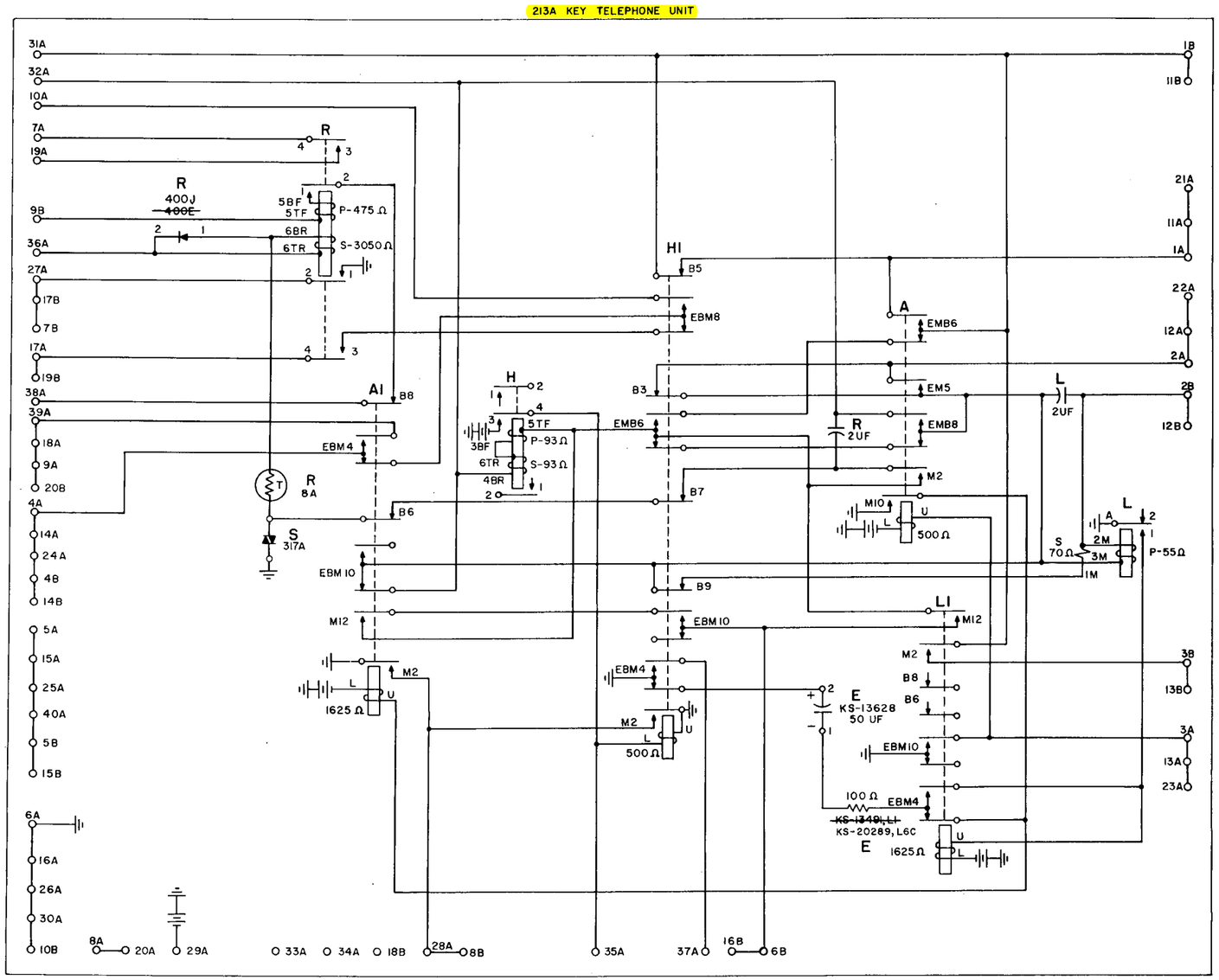

EQUIPMENT NOTES:

201. THIS KEY TEL UNIT IS DESIGNED FOR USE WITH KEY TELEPHONE SYSTEM NO. 1A AND 1A1 AND KEY EQUIPMENTS NO. 100, NO. 101A, AND NO. 101B CIRCUIT SHOWN ON DRAWING SD-69230-01, J53021.

202. THIS KEY TEL UNIT IS 11 MODULES (4-25/32 IN.) WIDE.

20V NOMINAL
(14-26V)

KEY TELEPHONE UNITS CIRCUITS (213A KTU) ②	23B SD-69288-01-C12
BELL TELEPHONE LABORATORIES INCORPORATED	DWG SIZE 6S PRINTED IN U. S. A.

DRAWING ISSUE 8A

TCI Library- http://www.telephonecollectors.info/

DRAWING ISSUE	
8A	STYLE -
16B	R&B CAB REG.

FIG. 15 (MFR DISC.)
STATION SIGNALING CIRCUIT
(SINGLE TALKING LINK)
SEE NOTE 204

FIG. 14 (MFR DISC.)
SINGLE TALKING LINK CIRCUIT

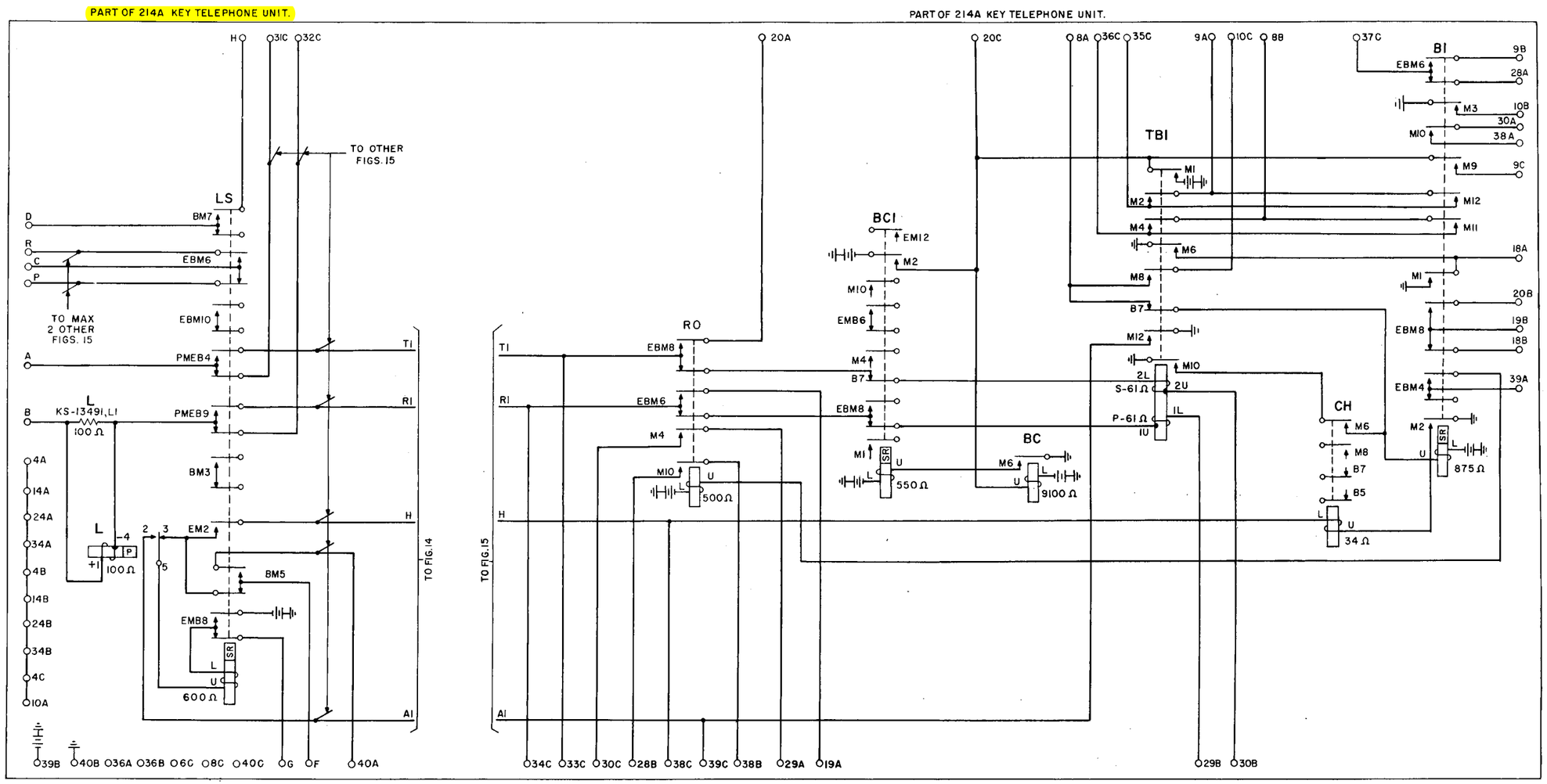

EQUIPMENT NOTES:

201. THIS KEY TEL UNIT IS DESIGNED FOR USE PRIMARILY IN KEY TEL SYSTEM NO. 6A, SD-69286-01, J53023.

202. THIS KEY TEL UNIT IS 33 MODULES (14 13/32 IN.) WIDE.

203. SUFFIX AFTER NUMBER OF PUNCHING INDICATES TERMINAL STRIP.

204.

REFERENCE DESIGNATION	PUNCHING								
	CKT 1	CKT 2	CKT 3	CKT 4	CKT 5	CKT 6	CKT 7	CKT 8	CKT 9
A	1A	11A	21A	31A	1B	11B	21B	31B	1C
B	2A	12A	22A	32A	2B	12B	22B	32B	2C
C	3A	13A	23A	33A	3B	13B	23B	33B	3C
D	5A	15A	25A	35A	5B	15B	25B	35B	5C
F	7A	17A	27A	37A	7B	17B	27B	37B	7C
G	11C	12C	13C	14C	15C	16C	17C	18C	19C
H	21C	22C	23C	24C	25C	26C	27C	28C	29C
P	6A	16A	26A	6A	16A	26A	26A	16A	6A
R	6B	16B	26B	6B	16B	26B	26B	16B	6B

KEY TELEPHONE UNITS CIRCUITS
(214A KTU)

SD-69288-01-C13

BELL TELEPHONE LABORATORIES INCORPORATED

DWG SIZE 6S

PRINTED IN U. S. A.

TCI Library- http://www.telephonecollectors.info/

FIG. 16 (MFR DISC)

SINGLE TALKING LINK CIRCUIT

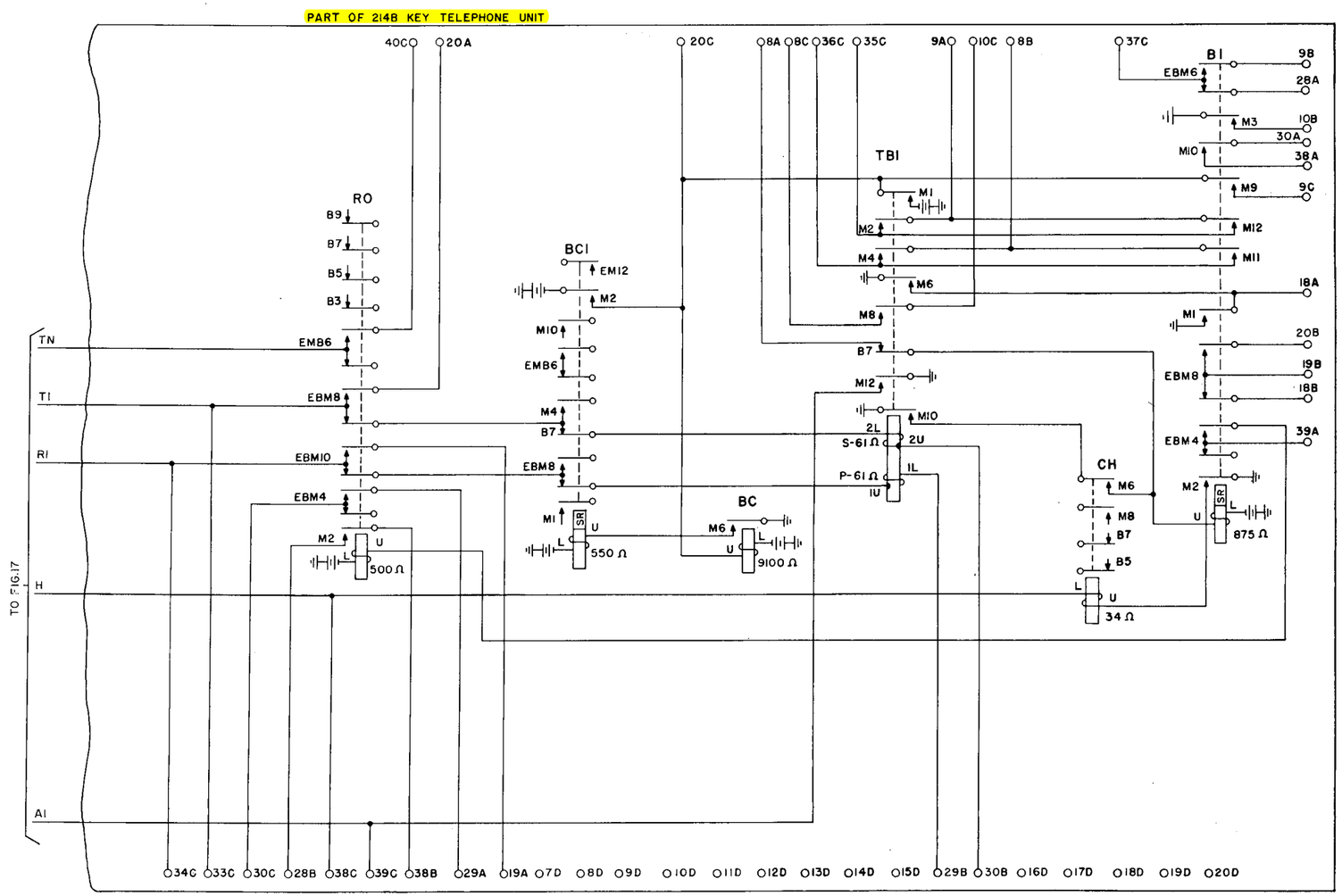

DRAWING ISSUE	
8A	[illegible]
14B	EFS DHC ARM
16B	RBB RBB AEG

KEY TELEPHONE UNITS CIRCUITS

(214B KTU)

SD-69288-01-C14

BELL TELEPHONE LABORATORIES INCORPORATED

DWG SIZE 6S

PRINTED IN U. S. A.

E-7420 (3-57)

TCI Library- http://www.telephonecollectors.info/

FIG.17 (MFR DISC)

STATION SIGNALING CIRCUIT
(SINGLE TALKING LINK)

SEE NOTES 204 & 205

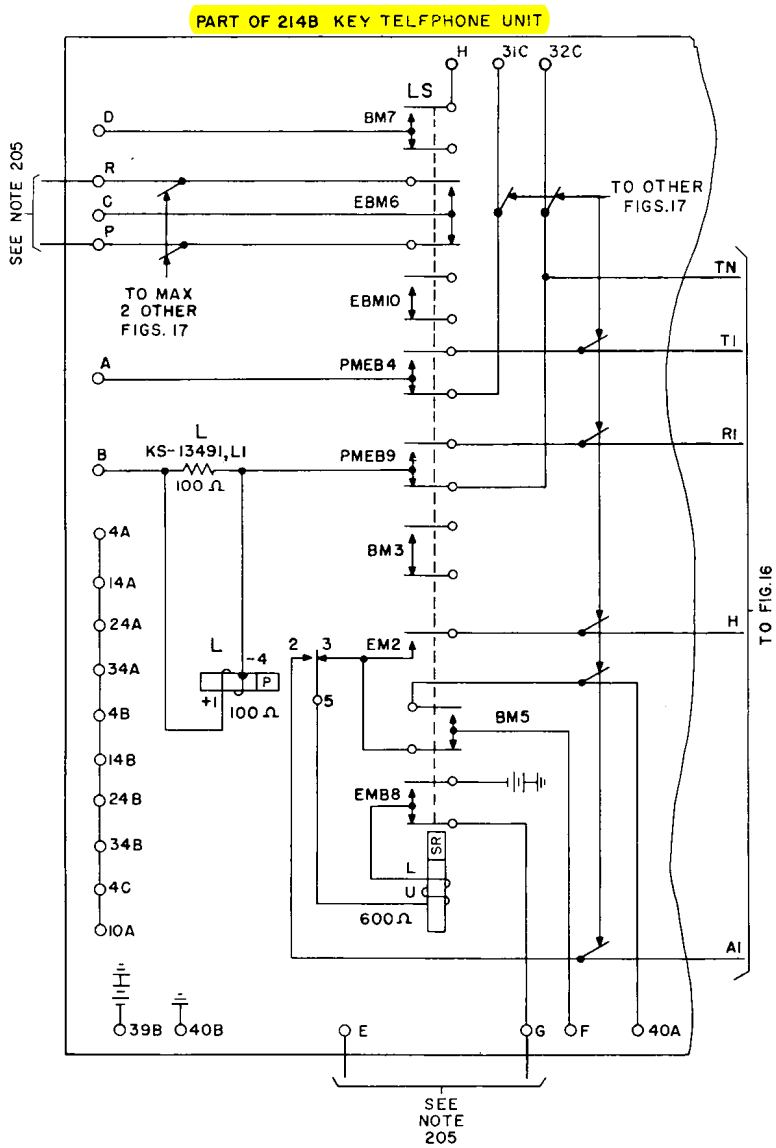

EQUIPMENT NOTES:

201. THIS KEY TEL UNIT IS DESIGNED FOR USE PRIMARILY IN KEY TEL SYSTEM NO.6A, SD-69286-01, J 53023.

202. THIS KEY TEL UNIT IS 37 MODULES (16 5/32 IN.) WIDE.

203. SUFFIX AFTER NUMBER OF PUNCHING INDICATES TERMINAL STRIP.

204.

REFERENCE DESIGNATION	PUNCHING								
	CKT1	CKT2	CKT3	CKT4	CKT5	CKT6	CKT7	CKT8	CKT9
A	1A	11A	21A	31A	1B	11B	21B	31B	1C
B	2A	12A	22A	32A	2B	12B	22B	32B	2C
C	3A	13A	23A	33A	3B	13B	23B	33B	3C
D	5A	15A	25A	35A	5B	15B	25B	35B	5C
*E	6A	16A	26A	36A	6B	16B	26B	36B	6C
F	7A	17A	27A	37A	7B	17B	27B	37B	7C
*G	11C	12C	13C	14C	15C	16C	17C	18C	19C
H	21C	22C	23C	24C	25C	26C	27C	28C	29C
*P	1D	2D	3D	1D	2D	3D	3D	2D	1D
*R	4D	5D	6D	4D	5D	6D	6D	5D	4D
*SEE NOTE 205									

205. EXTERNALLY STRAP ALL E PUNCHINGS; EXTERNALLY STRAP ALL G PUNCHINGS; EXTERNALLY STRAP ALL P PUNCHINGS; EXTERNALLY STRAP ALL R PUNCHINGS.

24V NOMINAL (20-26V)

KEY TELEPHONE UNITS CIRCUITS (214B KTU)

SD-69288-01-C15

BELL TELEPHONE LABORATORIES INCORPORATED

DWG SIZE 3S

PRINTED IN U.S.A.

DRAWING ISSUE

8A	STM
14B	EFS DHC ARM
16B	RBB RBB PEG

TCI Library- http://www.telephonecollectors.info/

FIG. 18
STATION SIGNALING CIRCUIT
(SINGLE TALKING LINK)
SEE NOTES 203 & 204

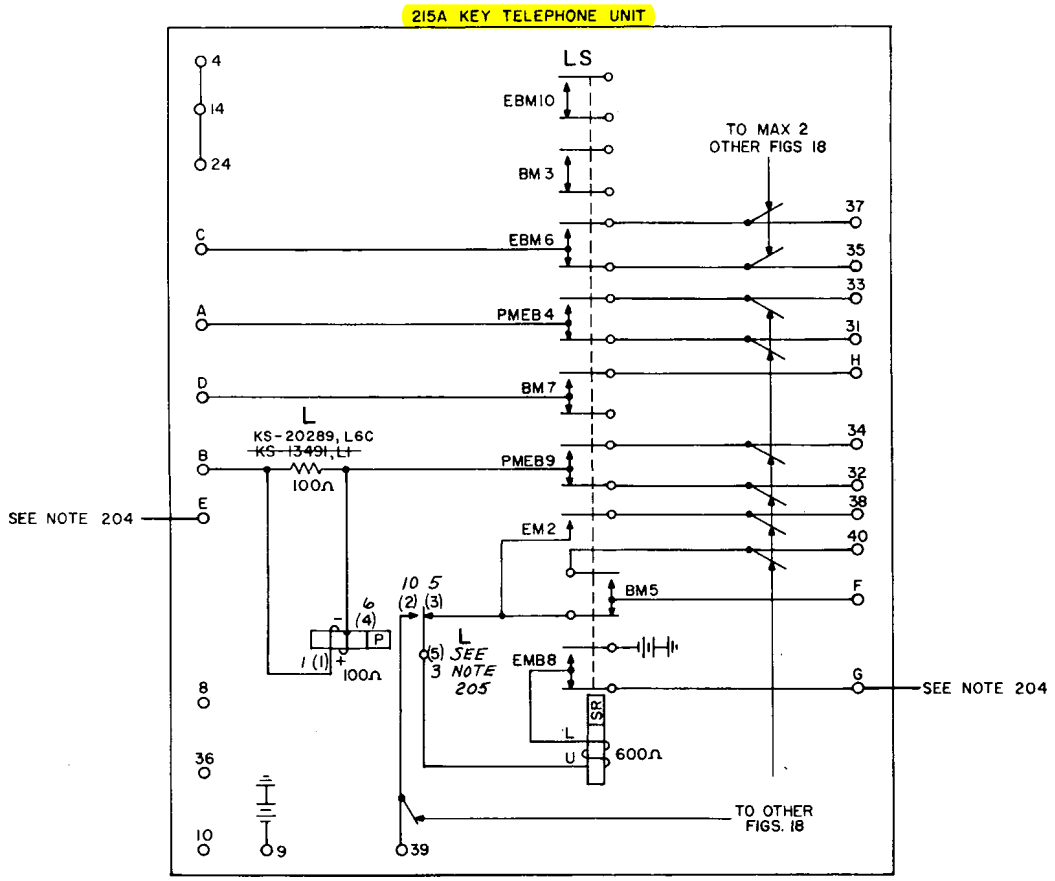

EQUIPMENT NOTES:

201. THIS KEY TEL UNIT IS DESIGNED FOR USE IN KEY TEL SYSTEM NO. 6A, SD-69286-01, J53023.

202. THIS KEY TEL UNIT IS 9 MODULES (3-29/32 IN.) WIDE.

203.

REFERENCE DESIGNATION	PUNCHING		
	CKT 1	CKT 2	CKT 3
A	1	11	21
B	2	12	22
C	3	13	23
D	5	15	25
* E	6	16	26
F	7	17	27
* G	18	19	20
H	28	29	30
*SEE NOTE 204			

204. EXTERNALLY STRAP ALL E PUNCHINGS; EXTERNALLY STRAP ALL G PUNCHINGS.

205. NUMBERS IN PARENTHESES INDICATE TERMINALS FOR 280M RELAY.

DRAWING ISSUE 8A

KEY TELEPHONE UNITS CIRCUITS (215A KTU)

23B

SD-69288-01-C16

BELL TELEPHONE LABORATORIES INCORPORATED

DWG SIZE 3S

PRINTED IN U. S. A.

TCI Library- http://www.telephonecollectors.info/

FIG. 19
TRANSFER CIRCUIT

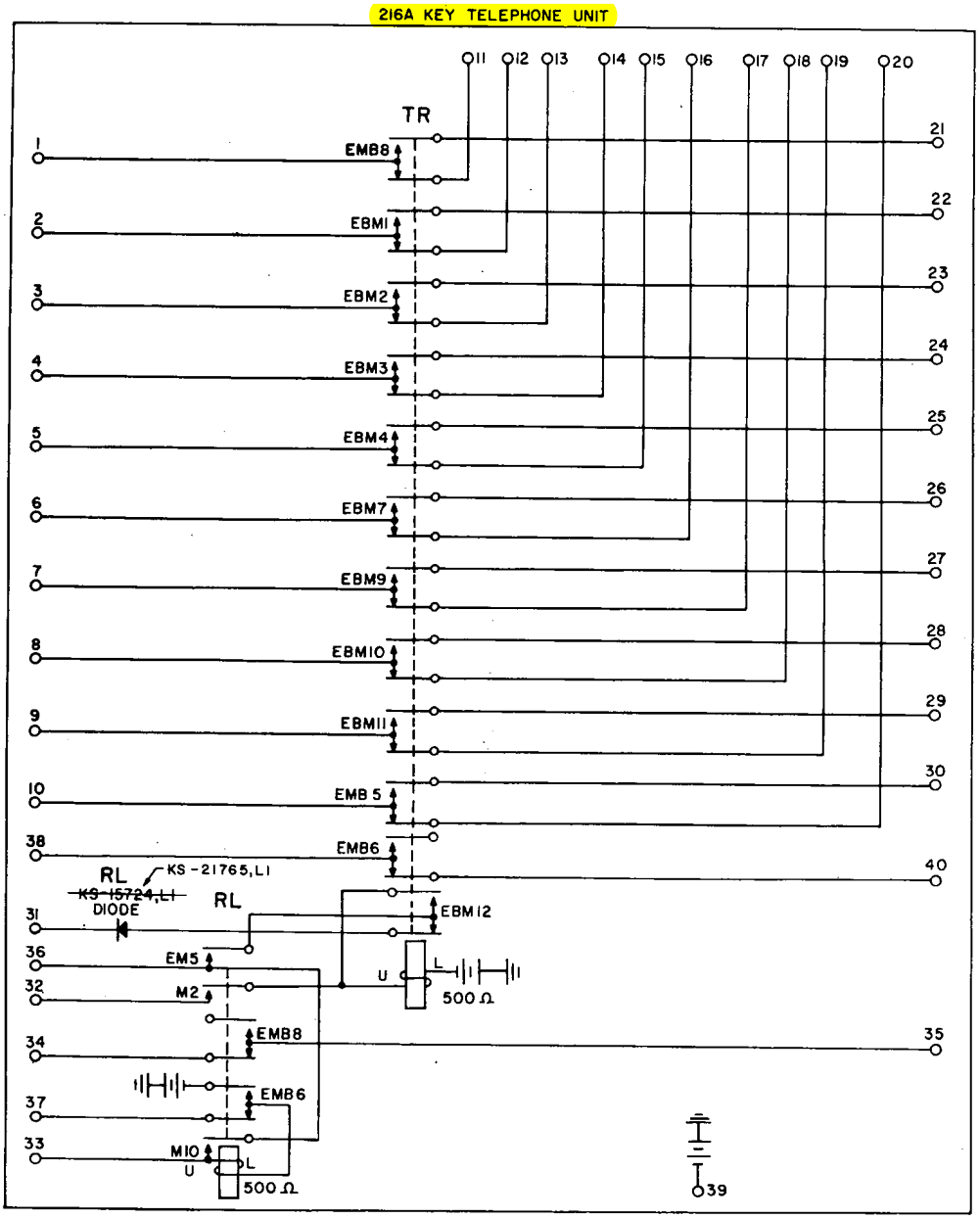

EQUIPMENT NOTES:
201. THIS KEY TEL UNIT IS DESIGNED FOR USE PRIMARILY IN KEY TEL SYSTEM NO. 6A, SD-69286-01, J53023.
202. THIS KEY TEL UNIT IS 7 MODULES (3-1/32 IN.) WIDE.

24V NOMINAL
(20-26V)

KEY TELEPHONE UNITS CIRCUITS
(216A KTU)

BELL TELEPHONE LABORATORIES
INCORPORATED

DWG SIZE 3S

SD-69288-01-C17

PRINTED IN U. S. A.

DRAWING ISSUE
8A
16B

TCI Library- http://www.telephonecollectors.info/

FIG. 20 (MFR. DISC.)

PRESET CONFERENCE CIRCUIT

DRAWING ISSUE	
8A	STA-B -
16B	P.BB P.BB P.E6

217A KEY TELEPHONE UNIT

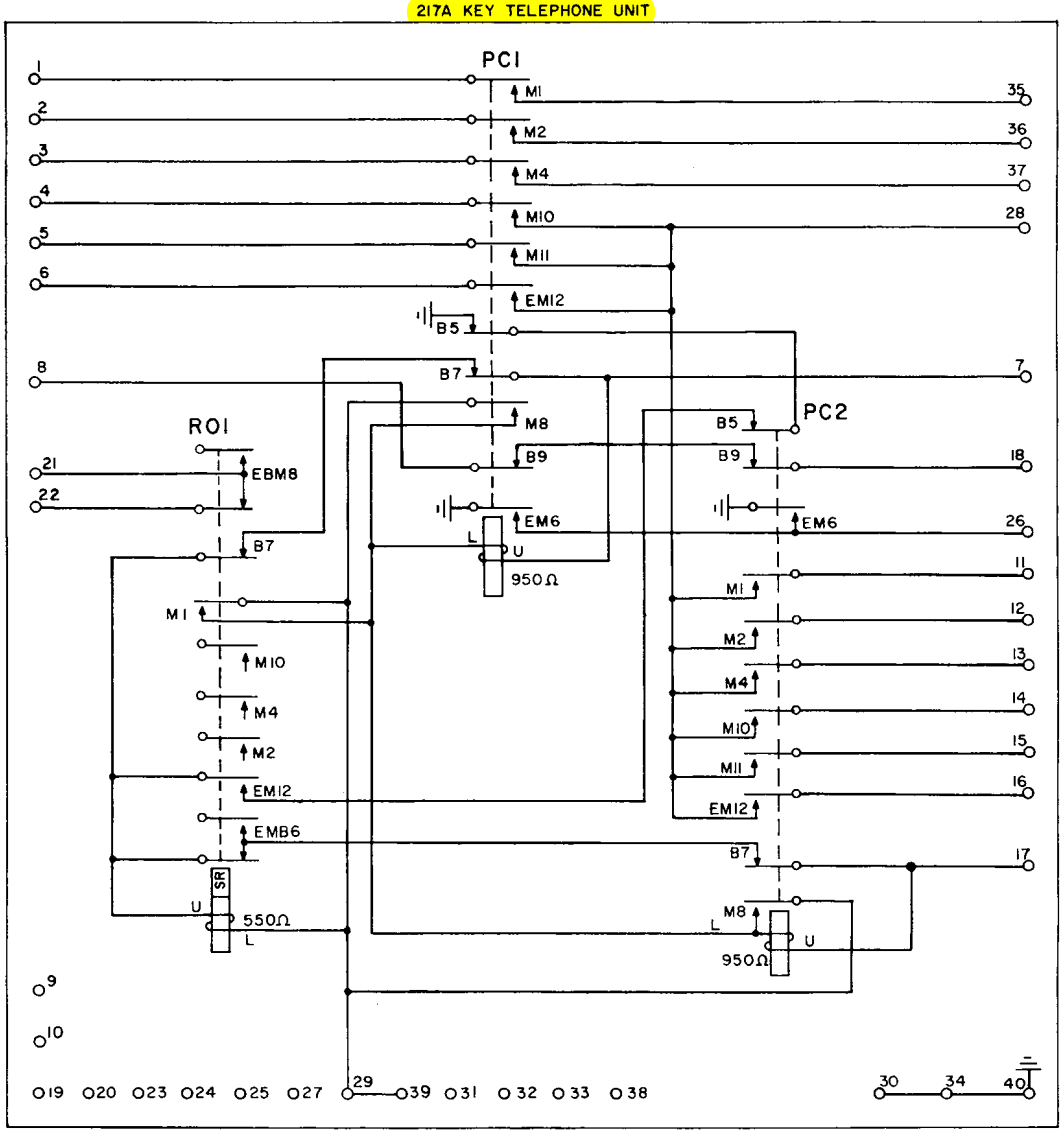

EQUIPMENT NOTES:

201. THIS KEY TEL UNIT IS DESIGNED FOR USE PRIMARILY IN KEY TEL SYSTEM NO. 6A, SD-69286-01, J53023.

202. THIS KEY TEL UNIT IS 7 MODULES (3-1/32 IN.) WIDE.

24V NOMINAL (20-26V)

KEY TELEPHONE UNITS CIRCUITS (217A KTU)	SD-69288-01-C18
BELL TELEPHONE LABORATORIES INCORPORATED — DWG SIZE 3S — PRINTED IN U. S. A.	

TCI Library- http://www.telephonecollectors.info/

FIG. 21

TWO AND FOUR WIRE PRIVATE LINE STATION CIRCUIT

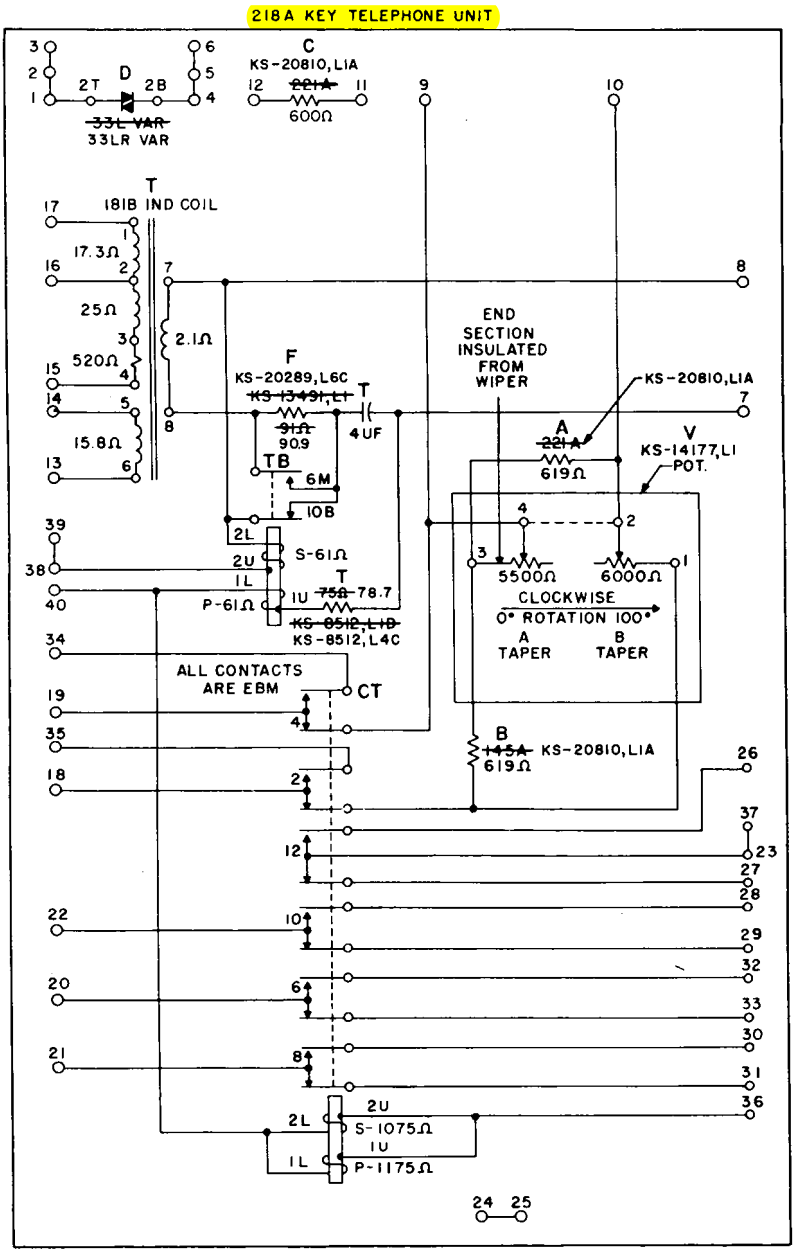

EQUIPMENT NOTES:

201. THIS KEY TEL UNIT IS DESIGNED FOR USE PRIMARILY IN STATION CIRCUIT OF 2 AND 4 WIRE PRIVATE LINE STATION CIRCUIT, SD-69254-01

202. THIS KEY TEL UNIT IS 7 MODULES (3-1/32 IN.) WIDE.

20V NOMINAL
(14-26V)

DRAWING ISSUE	
8A	
16B	
17D	

KEY TELEPHONE UNITS CIRCUITS
(218A KTU)

SD-69288-01-C19

BELL TELEPHONE LABORATORIES INCORPORATED

DWG SIZE 3S

PRINTED IN U.S.A.

TCI Library- http://www.telephonecollectors.info/

DRAWING ISSUE	
8A	ST/MW
16B	RBB RBB PEG
17D	RDB RBB HW

FIG. 22

TWO AND FOUR WIRE PRIVATE LINE LINE CIRCUIT

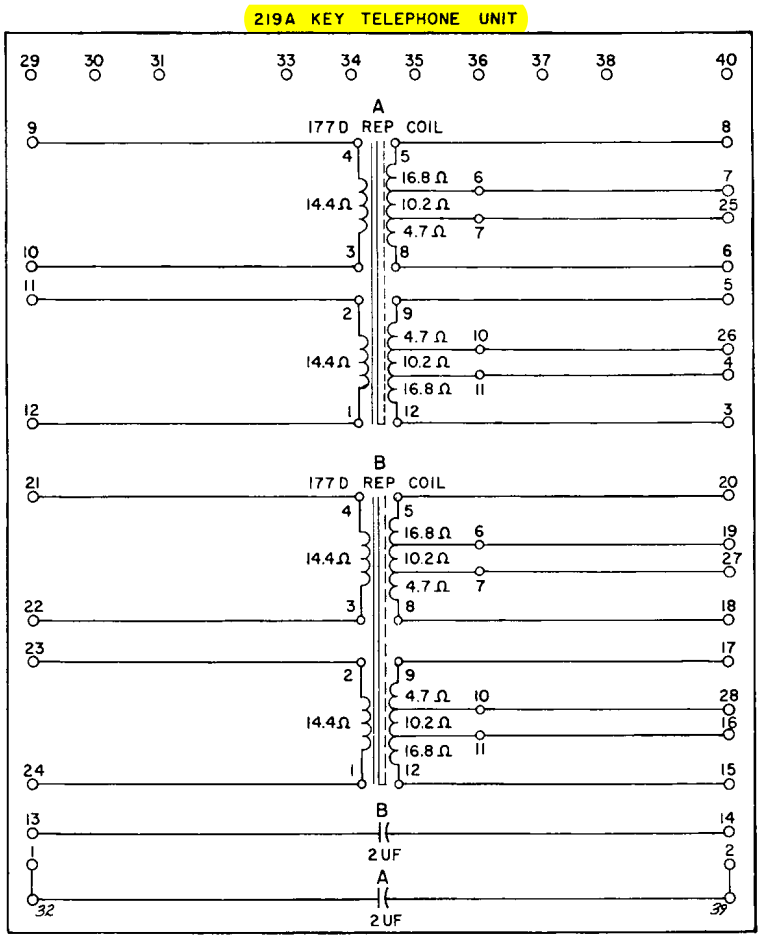

EQUIPMENT NOTES:

201. THIS KEY TELEPHONE UNIT IS DESIGNED FOR USE PRIMARILY IN STATION CIRCUIT OF 2 AND 4 WIRE PRIVATE LINE CIRCUIT, *SD-69410-01*

202. THIS KEY TELEPHONE UNIT IS 7 MODULES (3-1/32 IN.) WIDE.

203. TERMINALS 32 AND 39 ARE USED TO MOUNT THE "A" CAPACITOR.

KEY TELEPHONE UNITS CIRCUITS
(219A KTU)

SD-69288-01-C20

BELL TELEPHONE LABORATORIES INCORPORATED

OWG SIZE 3S

PRINTED IN U. S. A.

TCI Library- http://www.telephonecollectors.info/

DRAWING ISSUE	
8A	
16B	RBB RBB PEG

FIG. 23

TWO AND FOUR WIRE PRIVATE LINE RINGING RELAY OR POWER SUPPLY CIRCUIT

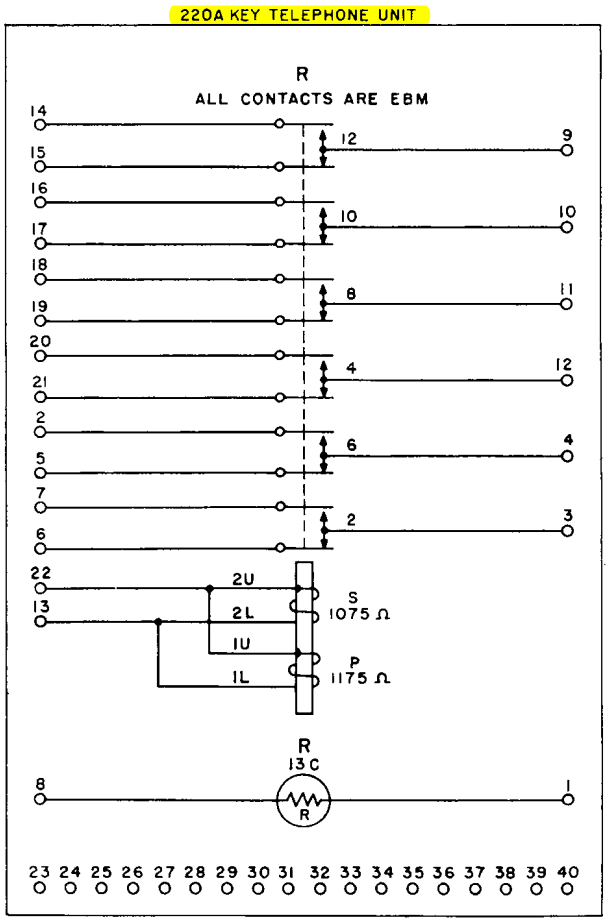

EQUIPMENT NOTES:

201. THIS KEY TEL UNIT IS DESIGNED FOR USE PRIMARILY IN STATION CIRCUIT OF 2 AND 4 WIRE PRIVATE LINE CIRCUIT, SD-69254-01

202. THIS KEY TEL UNIT IS 7 MODULES (3-1/32 IN.) WIDE.

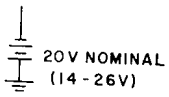

KEY TELEPHONE UNITS CIRCUITS
(220A KTU)

SD-69288-01-C21

BELL TELEPHONE LABORATORIES INCORPORATED

DWG SIZE 3S

PRINTED IN U.S.A.

TCI Library- http://www.telephonecollectors.info/

FIG. 24

EXECUTIVE CALLING CONTROL AND NO-SUCH-NUMBER CIRCUIT

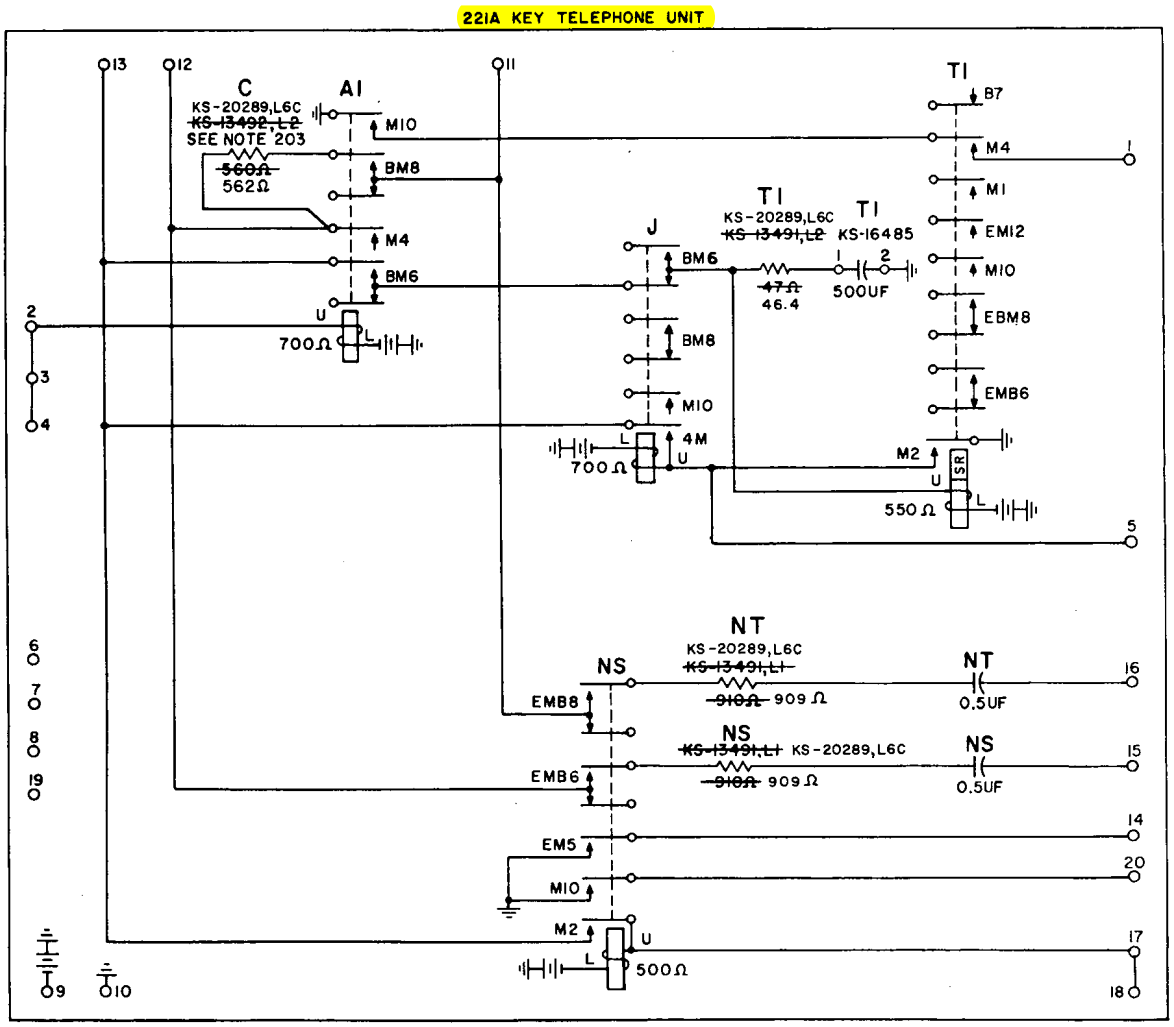

EQUIPMENT NOTES:

201. THIS KEY TEL UNIT IS DESIGNED FOR USE PRIMARILY IN KEY TEL SYSTEM NO. 6A, SD-69236-01, J53023.
202. THIS KEY TEL UNIT IS 8 MODULES (3-15/32 IN.) WIDE.
203. THE M4 CONTACT OF THE (A1) RELAY IS USED AS AN ANCHOR POINT FOR THE (C) RESISTOR.

24V NOMINAL
(20-26V)

KEY TELEPHONE UNITS CIRCUITS (221A KTU)	SD-69288-01-C22
BELL TELEPHONE LABORATORIES INCORPORATED — DWG SIZE 3S — PRINTED IN U.S.A.	

DRAWING ISSUE

8A	
11A	
16B	

TCI Library- http://www.telephonecollectors.info/

FIG.25

TWO TALKING LINK CIRCUIT

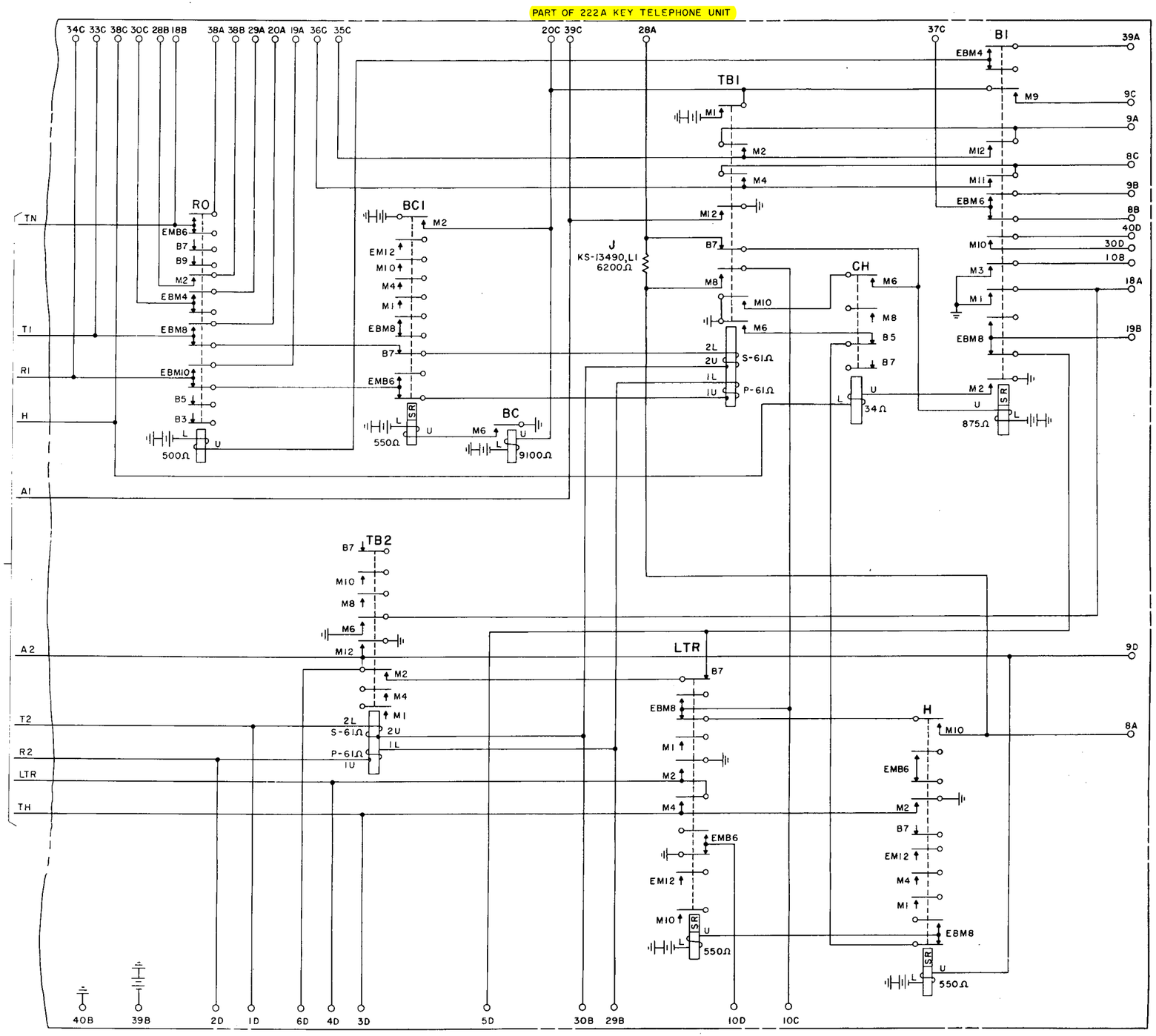

DRAWING ISSUE	
8A	8/1/64 -
16B	RBB RBB PEG
17D	PDG RBB KW

KEY TELEPHONE UNITS CIRCUITS
(222A KTU)

SD-69288-01-C23

BELL TELEPHONE LABORATORIES
INCORPORATED

SHEET SIZE 6S

PRINTED IN U. S. A.

E-7420 (8-67)

TCI Library- http://www.telephonecollectors.info/

FIG. 26

STATION SIGNALING CIRCUIT
(TWO TALKING LINKS)
SEE NOTE 203

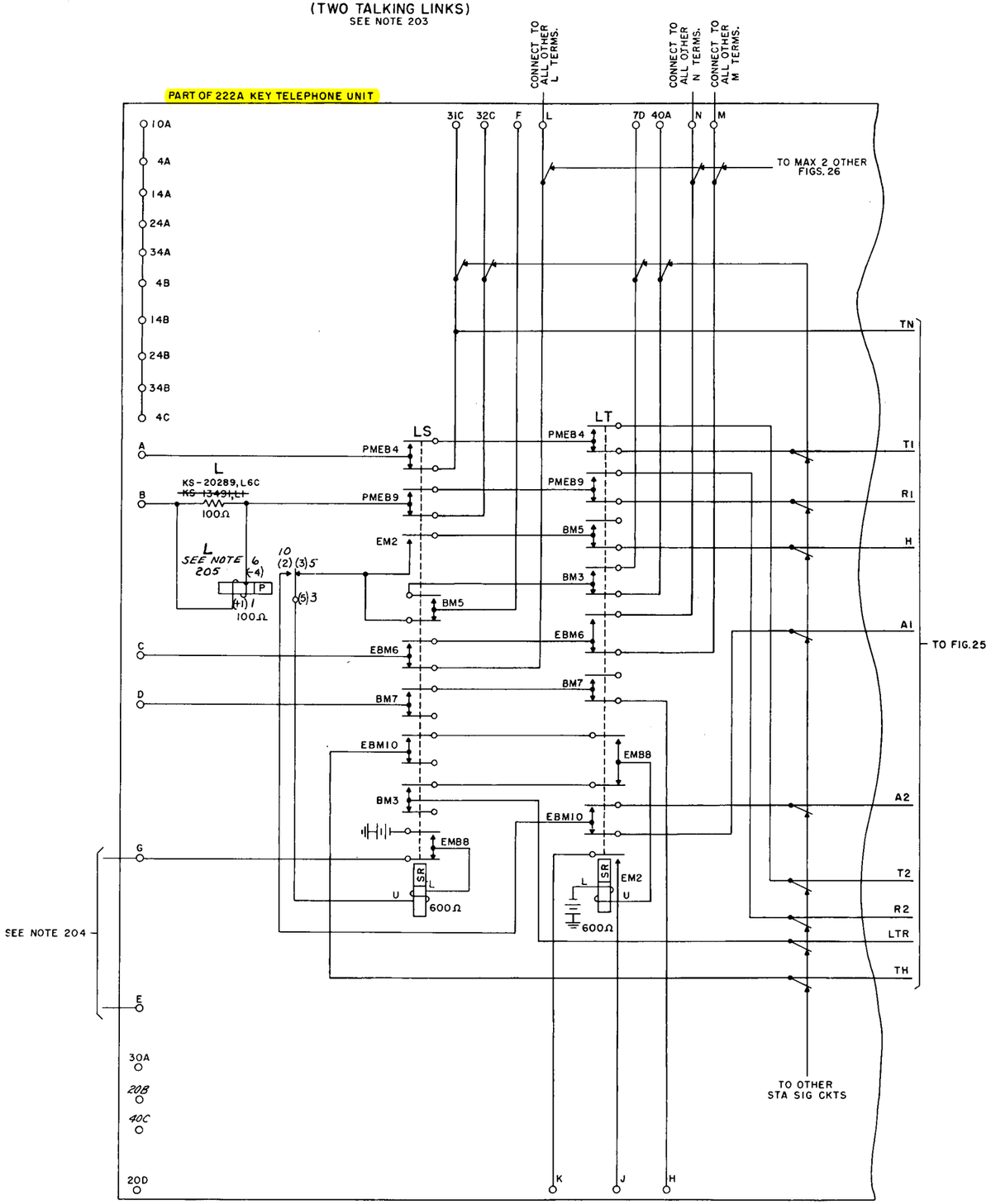

EQUIPMENT NOTES:

201. THIS KEY TEL UNIT IS DESIGNED FOR USE PRIMARILY IN KEY SYSTEM NO. 6A, SD-69286-01, J53023.

202. THIS KEY TEL UNIT IS 23 IN. WIDE.

203.

REFERENCE DESIGNATION	PUNCHING								
	CKT 1	CKT 2	CKT 3	CKT 4	CKT 5	CKT 6	CKT 7	CKT 8	CKT 9
A	1A	11A	21A	31A	1B	11B	21B	31B	1C
B	2A	12A	22A	32A	2B	12B	22B	32B	2C
C	3A	13A	23A	33A	3B	13B	23B	33B	3C
D	5A	15A	25A	35A	5B	15B	25B	35B	5C
* E	6A	16A	26A	36A	6B	16B	26B	36B	6C
F	7A	17A	27A	37A	7B	17B	27B	37B	7C
* G	11C	12C	13C	14C	15C	16C	17C	18C	19C
H	21C	22C	23C	24C	25C	26C	27C	28C	29C
J	11D	12D	13D	14D	15D	16D	17D	18D	19D
K	21D	22D	23D	24D	25D	26D	27D	28D	29D
* L	31D	32D	33D	31D	32D	33D	31D	32D	33D
* M	34D	35D	36D	34D	35D	36D	34D	35D	36D
* N	37D	38D	39D	37D	38D	39D	37D	38D	39D

* SEE NOTE 204

204. EXTERNALLY STRAP ALL E PUNCHINGS, EXTERNALLY STRAP ALL G PUNCHINGS, EXTERNALLY STRAP ALL L PUNCHINGS, EXTERNALLY STRAP ALL M PUNCHINGS, EXTERNALLY STRAP ALL N PUNCHINGS.

205. NUMBERS IN PARENTHESES INDICATE TERMINALS FOR 280M RELAY.

DRAWING ISSUE	
8A	STYLE L
1A	TWO LINKS
16B	PRA PRB PRC
17D	PRA PRB PRC

KEY TELEPHONE UNITS CIRCUITS
(222A KTU)

SD-69288-01-C24

BELL TELEPHONE LABORATORIES INCORPORATED

DWG SIZE 6S

PRINTED IN U. S. A.

TCI Library- http://www.telephonecollectors.info/

FIG.27
STATION SIGNALING CIRCUIT
(TWO TALKING LINKS)
SEE NOTES 203 & 204

223A KEY TELEPHONE UNIT

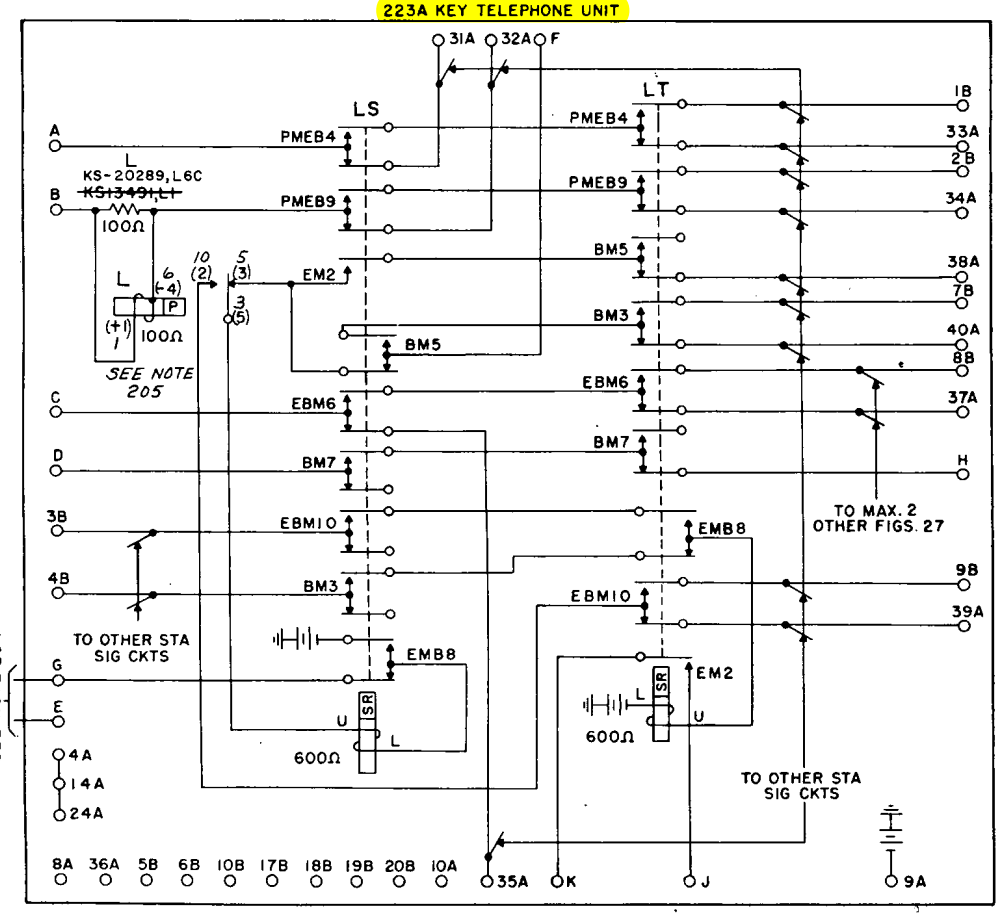

EQUIPMENT NOTES:

201. THIS KEY TEL UNIT IS DESIGNED FOR USE PRIMARILY IN KEY TEL SYSTEM NO. 6A, SD-69286-01, J53023.

202. THIS KEY TEL UNIT IS 13 MODULES (5-21/32 IN.) WIDE.

203.

REFERENCE DESIGNATION	PUNCHING		
	CKT 1	CKT 2	CKT 3
A	1A	11A	21A
B	2A	12A	22A
C	3A	13A	23A
D	5A	15A	25A
*E	6A	16A	26A
F	7A	17A	27A
*G	18A	19A	20A
H	28A	29A	30A
J	11B	13B	15B
K	12B	14B	16B
* SEE NOTE 204			

204. EXTERNALLY STRAP ALL E PUNCHINGS; EXTERNALLY STRAP ALL G PUNCHINGS.

205. NUMBERS IN PARENTHESES INDICATE TERMINALS FOR 280M RELAY.

24V NOMINAL (20-26V)

KEY TELEPHONE UNITS CIRCUITS (223A KTU)	SD-69288-01-C25
BELL TELEPHONE LABORATORIES INCORPORATED — DWG SIZE 3S — PRINTED IN U. S. A.	

DRAWING ISSUE 8A — 1GB

TCI Library- http://www.telephonecollectors.info/

DRAWING ISSUE	
8A	STAB -
16B	RBB RBA PEC

FIG. 28 (MFR. DISC.)

BUSY SIGNAL AND CAMP-ON CONTROL CIRCUIT

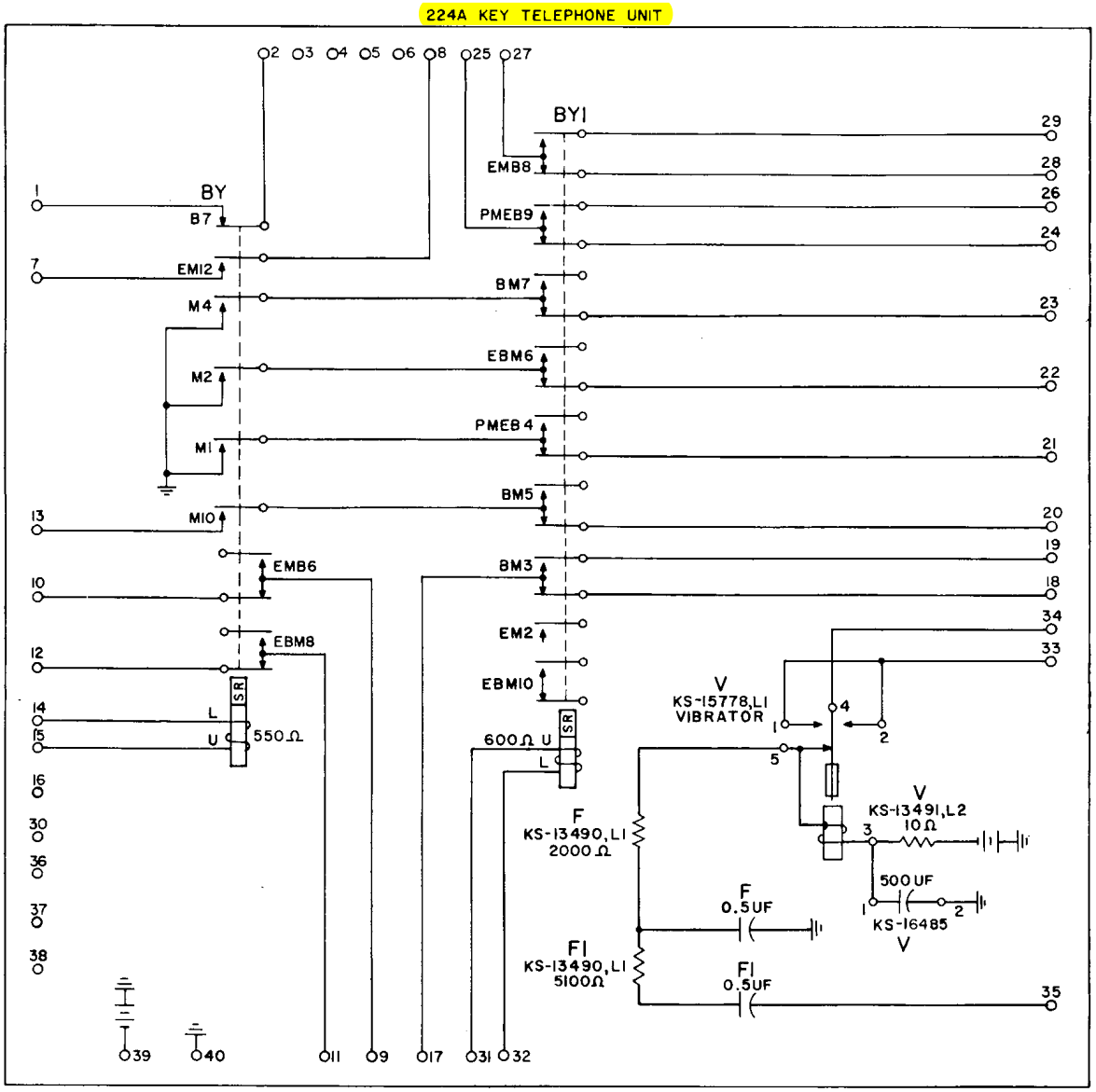

EQUIPMENT NOTES:
201. THIS KEY TEL UNIT IS DESIGNED FOR USE PRIMARILY IN KEY TEL SYSTEM NO. 6A, SD-69286-01, J53023.
202. THIS KEY TEL UNIT IS 8 MODULES (3-15/32 IN.) WIDE.

24V NOMINAL (20-26V)

KEY TELEPHONE UNITS CIRCUITS (224A KTU)	SD-69288-01-C26
BELL TELEPHONE LABORATORIES INCORPORATED — DWG SIZE 3S — PRINTED IN U. S. A.	

TCI Library- http://www.telephonecollectors.info/

DRAWING ISSUE	
8A	RJW
16B	RBB RBB PEG

FIG. 29
LONG LINE CIRCUIT

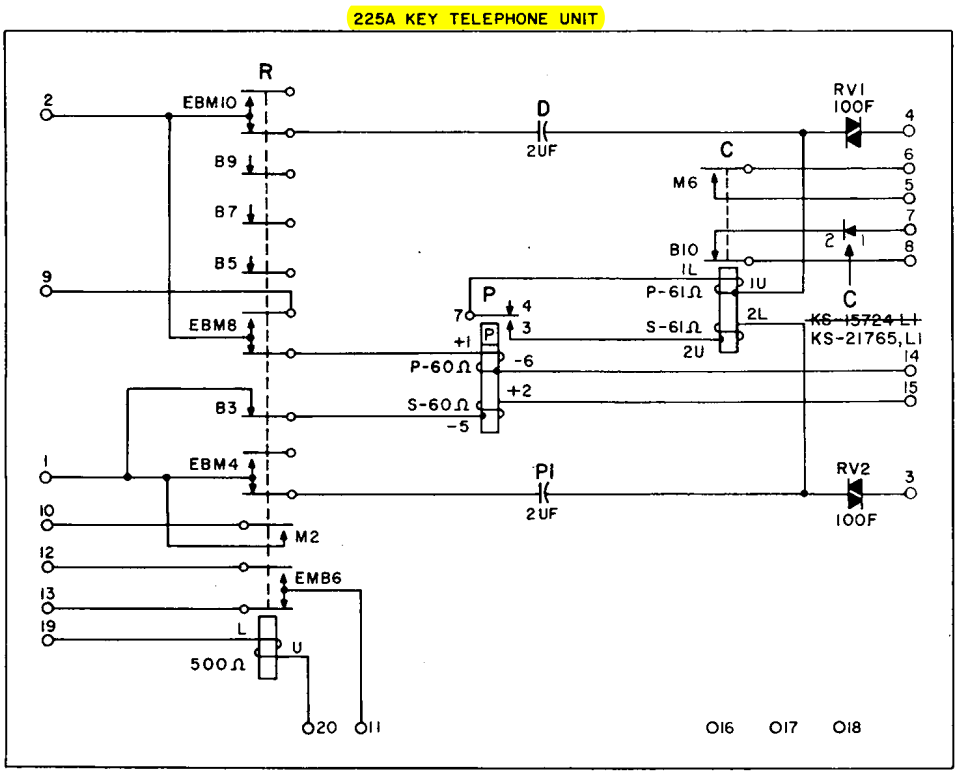

EQUIPMENT NOTES:
201. THIS KEY TEL UNIT IS DESIGNED FOR USE PRIMARILY IN KEY SYSTEM NO.6A, SD-69286-01, J53023.
202. THIS KEY TEL UNIT IS 5 MODULES (2-5/32 IN.) WIDE.

20V NOMINAL
(14-26V)

KEY TELEPHONE UNITS CIRCUITS (225A KTU)	SD-69288-01-C27
BELL TELEPHONE LABORATORIES INCORPORATED — DWG SIZE 3S — PRINTED IN U. S. A.	

TCI Library- http://www.telephonecollectors.info/

FIG. 30 (MFR DISC)
INWARD CONFERENCE CONTROL CIRCUIT

226A KEY TELEPHONE UNIT

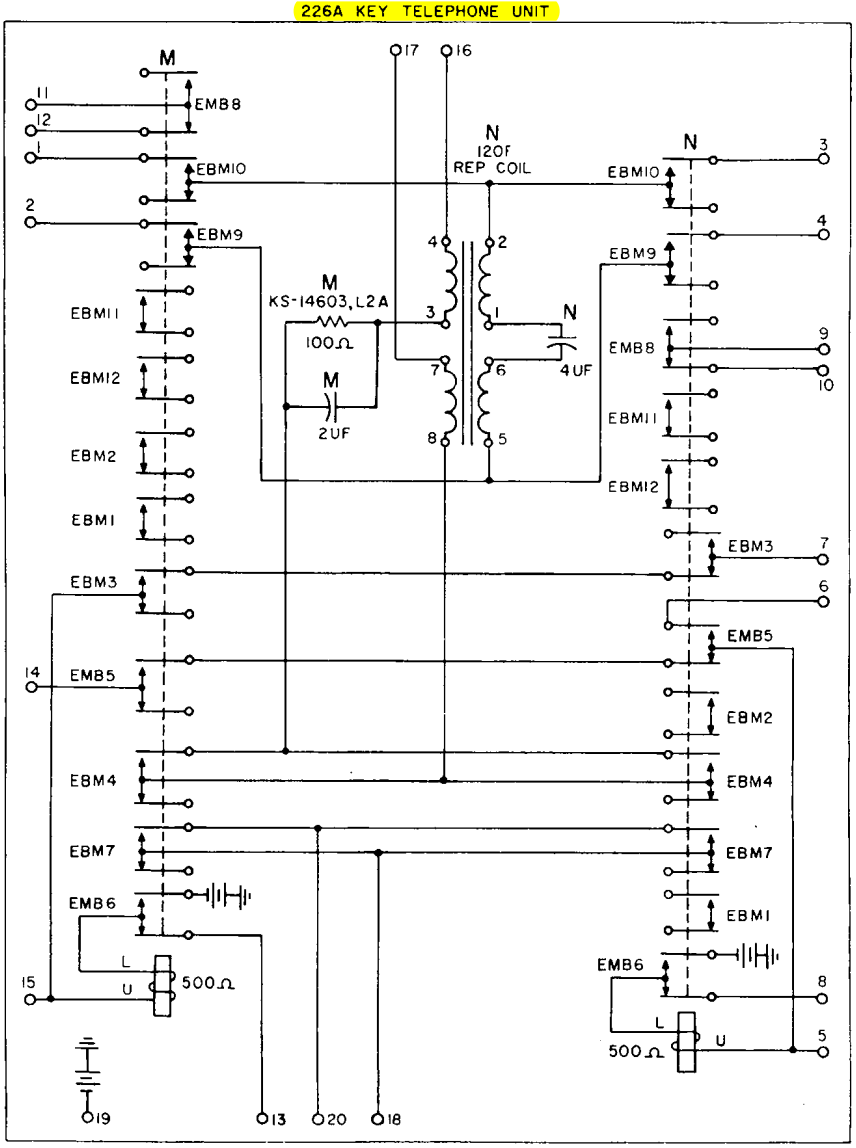

EQUIPMENT NOTES:
201. THIS KEY TEL. UNIT IS DESIGNED FOR USE PRIMARILY IN KEY TEL SYSTEM NO. 6A, SD-69286-01, J53023.
202. THIS KEY TEL. UNIT IS 8 MODULES (3-15/32 IN.) WIDE.

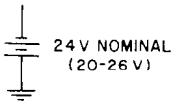

DRAWING ISSUE	
8A	ST/MA
9A	ST/N
16B	RBB RBB REG

KEY TELEPHONE UNITS CIRCUITS
(226A KTU)

SD-69288-01-C28

BELL TELEPHONE LABORATORIES INCORPORATED

DWG SIZE 3S

PRINTED IN U.S.A.

TCI Library- http://www.telephonecollectors.info/

DRAWING ISSUE	
8A	STKO -
16B	J.P.N. R.B.B. P.E.G.

FIG. 31 (MFR DISC)

COMMON AUDIBLE CONTROL CIRCUIT

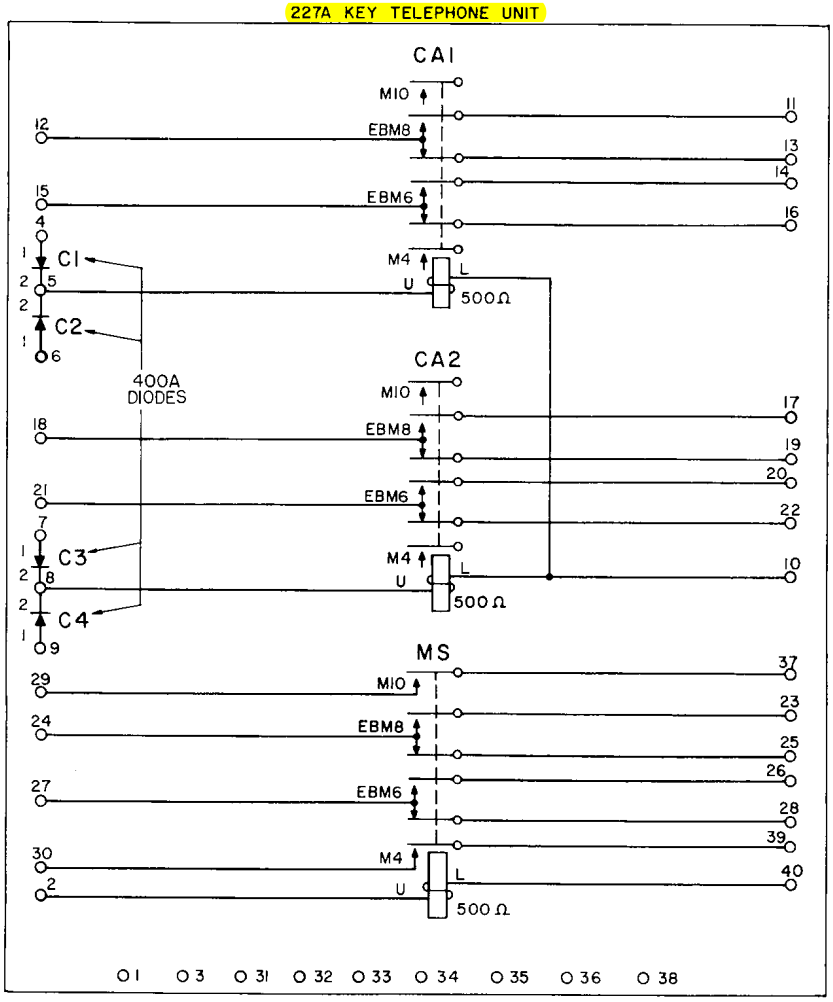

EQUIPMENT NOTES:

201. THIS KEY TEL UNIT IS DESIGNED FOR USE PRIMARILY IN KEY TEL SYSTEM NO. 6A, SD-69286-01, J53023.

202. THIS KEY TEL UNIT IS 7 MODULES (3-1/32 IN.) WIDE.

20V NOMINAL
(14-26V)

KEY TELEPHONE UNITS CIRCUITS (227A KTU)	SD-69288-01-C29
BELL TELEPHONE LABORATORIES INCORPORATED — OWG SIZE 3S	PRINTED IN U. S. A.

TCI Library- http://www.telephonecollectors.info/

DRAWING ISSUE	
8A	ST/BO -
11A	JWB PHC
16B	LBB RBB PLG

FIG. 32
BLANK UNIT

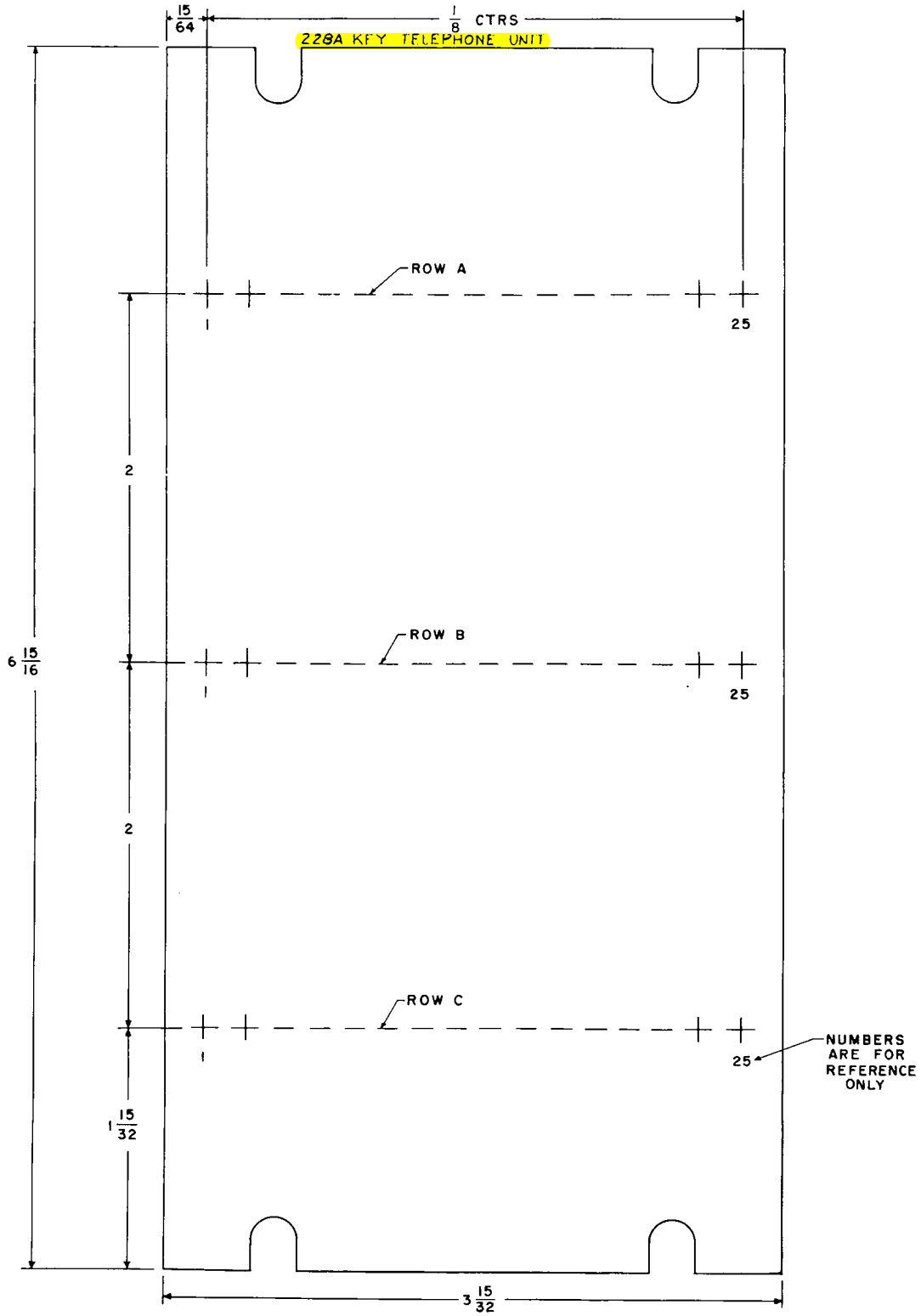

EQUIPMENT NOTES:

201. THIS KEY TEL UNIT IS DESIGNED FOR USE PRIMARILY IN KEY TEL SYSTEM NO. 1A1 (SD-69203-01, J53021) AND NO. 6A (SD-69286-01, J53023).

202. THIS KEY TEL UNIT IS 8 MODULES 3-(15/32 IN) WIDE.

203. THIS KEY TEL UNIT IS PROVIDED WITH 40 SCREW TYPE TERMINAL PUNCHINGS.

KEY TELEPHONE UNITS CIRCUITS (228A KTU)	SD-69288-01-C30
BELL TELEPHONE LABORATORIES INCORPORATED — DWG SIZE 3S	PRINTED IN U. S. A.

TCI Library- http://www.telephonecollectors.info/

DRAWING ISSUE	
8A	ST/80 -
12B	RJT DNC REJ
16B	RBB RBB REG.

FIG. 33 *MFR(DISC)*

AUXILIARY RELAY UNIT

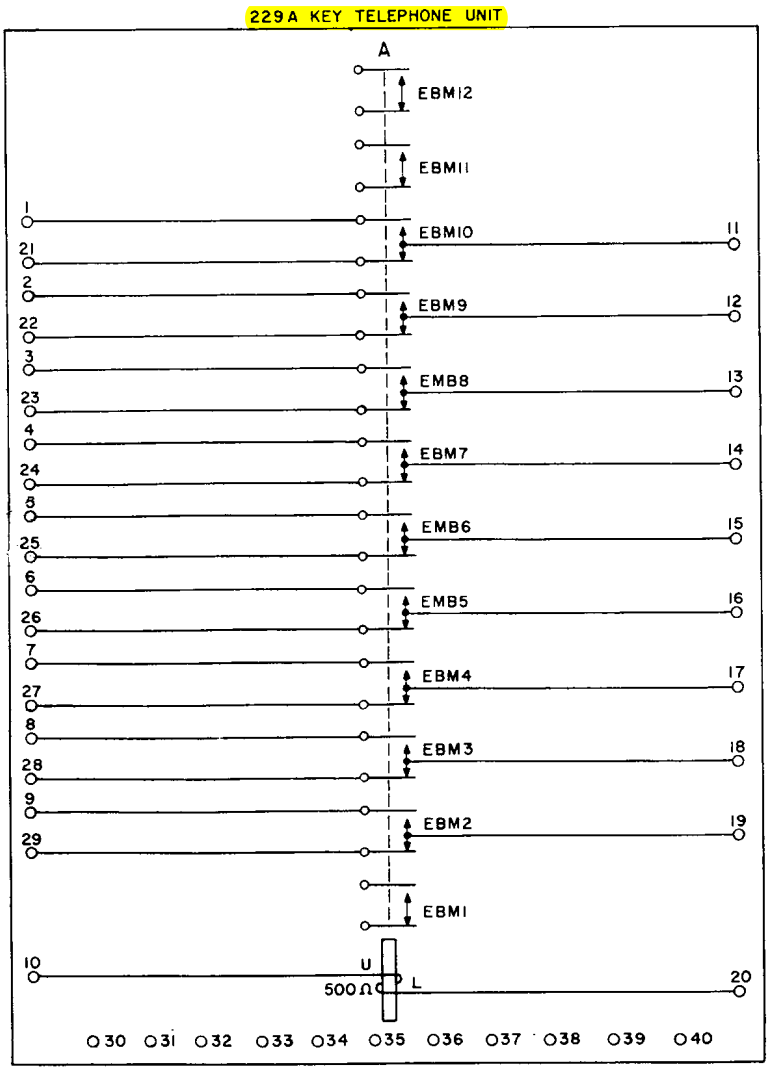

EQUIPMENT NOTES:

201. THIS KEY TELEPHONE UNIT IS DESIGNED FOR USE PRIMARILY IN KEY TELEPHONE SYSTEM NO. 6A, SD-69286-01, J53023.

202. THIS KEY TELEPHONE UNIT IS 7 MODULES (3-1/32 IN.) WIDE.

24V NOMINAL
(20-26V)

KEY TELEPHONE UNITS CIRCUITS (229A KTU)	SD-69288-01-C31
BELL TELEPHONE LABORATORIES INCORPORATED — DWG SIZE 3S — PRINTED IN U. S. A.	

TCI Library- http://www.telephonecollectors.info/

DRAWING ISSUE	
8A	STL.B -
10A	D.R. DHC
11A	JWG DHC
16B	RBB RBB RBG

FIG. 34 (MFR DISC.)

CO OR PBX LINE CIRCUIT

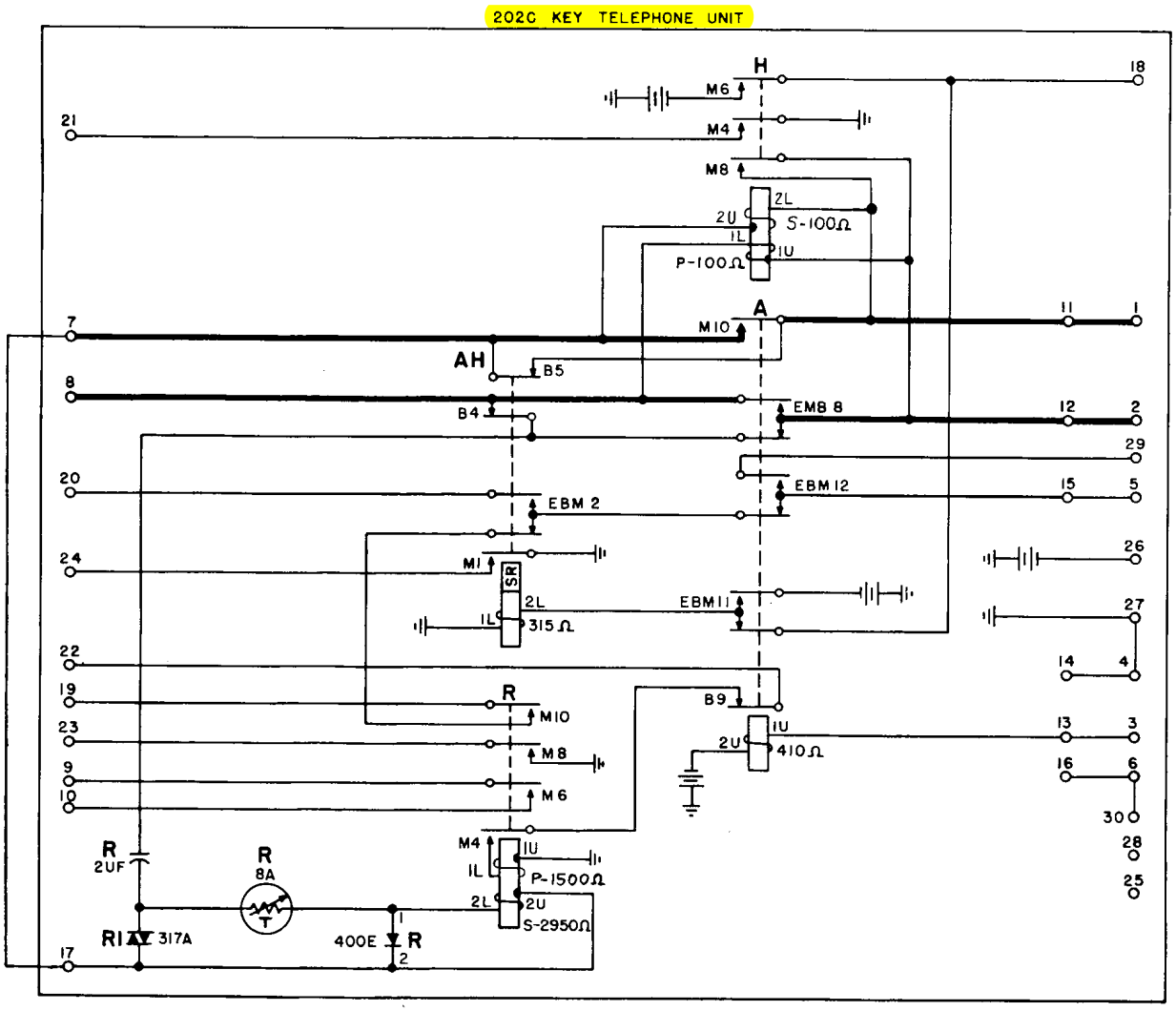

EQUIPMENT NOTES:

201. THIS KEY TEL UNIT IS DESIGNED FOR USE PRIMARILY IN KEY TEL SYSTEM NO. 1A1, SD-69270-01, J53021.

202. THIS KEY TEL UNIT IS 6 MODULES (2-19/32 IN.) WIDE.

20V NOMINAL
(14-26V)

KEY TELEPHONE UNITS CIRCUITS (202C KTU)	SD-69288-01-C32
BELL TELEPHONE LABORATORIES INCORPORATED — DWG SIZE 3S	PRINTED IN U.S.A.

TCI Library- http://www.telephonecollectors.info/

FIG. 35 (MFR DISC.)

CO OR PBX LINE CIRCUIT

(SEE NOTES 203 & 204)

EQUIPMENT NOTES:

201. THIS KEY TEL UNIT IS DESIGNED FOR USE PRIMARILY IN KEY TEL SYSTEM NO. 1A1, SD-69270-01, J53021.
202. THIS KEY TEL UNIT IS 19 MODULES (8-9/32 IN.) WIDE.
203. TERMINAL STRIP (A) ONLY EQUIPPED WITH TERMINALS 21 THROUGH 30.
204.

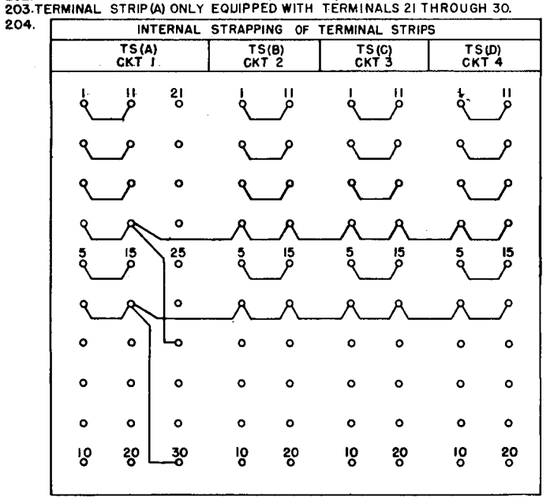

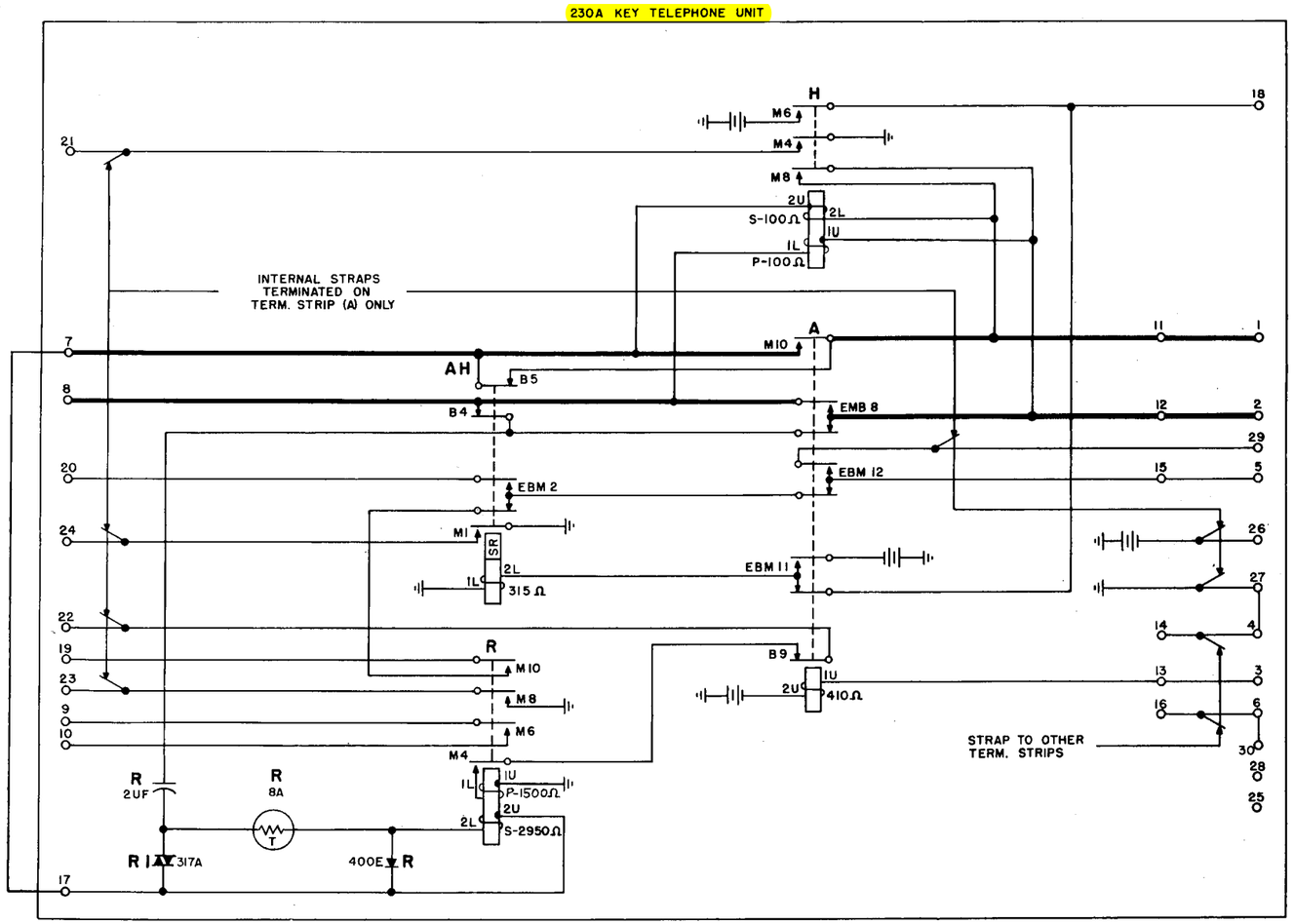

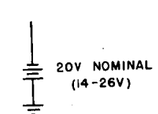

DRAWING ISSUE	
8A	STR'B -
10A	DIM. DHC
11A	DHC
16B	RBB RBB REG.

KEY TELEPHONE UNITS CIRCUITS

(230A KTU)

SD-69288-01-C33

BELL TELEPHONE LABORATORIES INCORPORATED

DWG SIZE 6S

PRINTED IN U. S. A.

TCI Library- http://www.telephonecollectors.info/

FIG.37
SELECTOR CIRCUIT

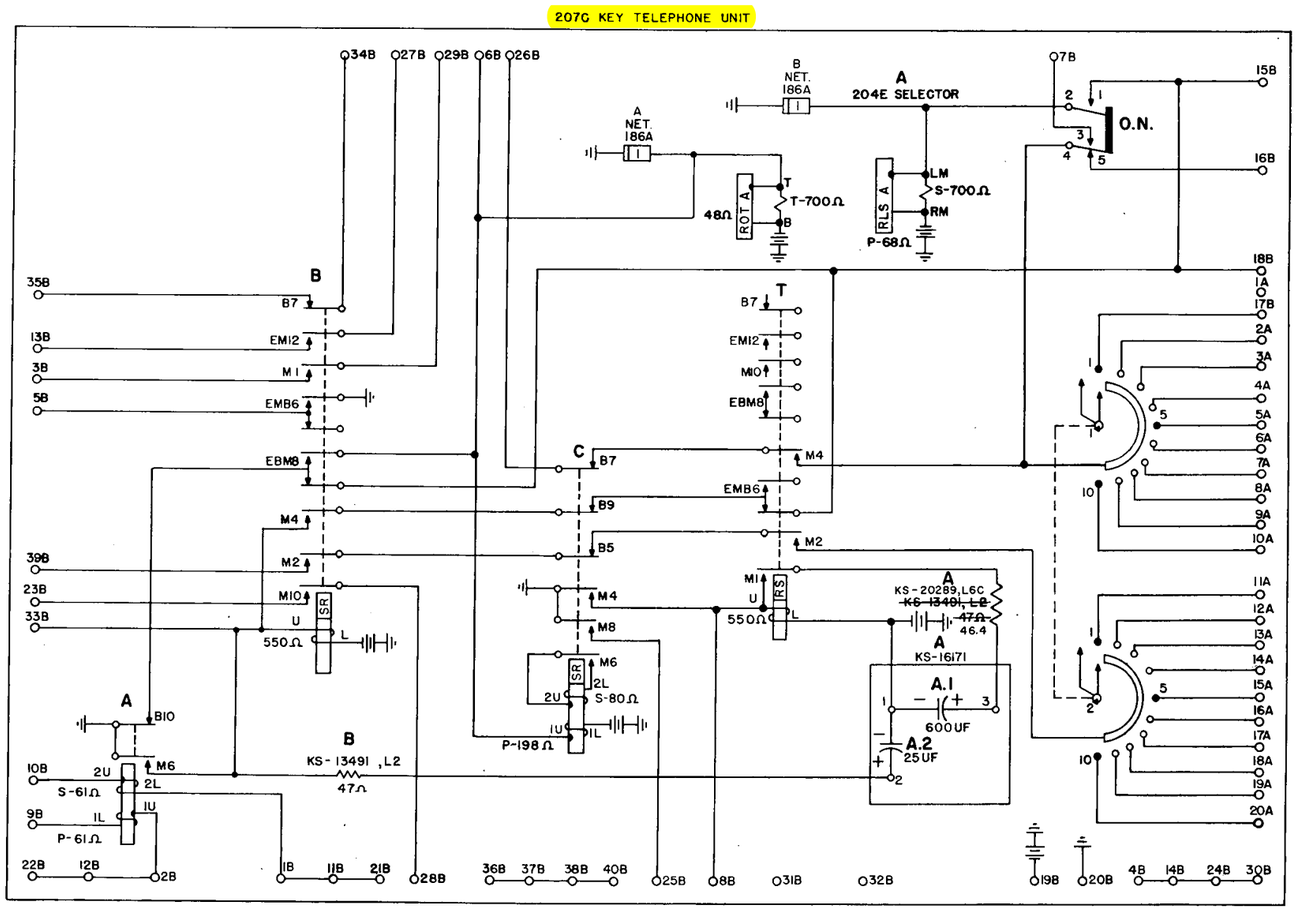

EQUIPMENT NOTES:
201. THIS KEY TEL UNIT IS DESIGNED FOR USE PRIMARLY IN KEY TEL SYSTEM NO 6A, SD-69286-01,J53023.
202. THIS KEY TEL UNIT IS 12 MODULES (5-7/32 IN.) WIDE.

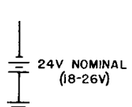

DRAWING ISSUE	
8A	STR-A -
1GB	2BD 2BE 2EG

KEY TELEPHONE UNITS CIRCUITS	ISSUE SD-69288-01-C34
BELL TELEPHONE LABORATORIES INCORPORATED	DWG SIZE 6S PRINTED IN U. S. A.

E 7420 (3-57)

TCI Library- http://www.telephonecollectors.info/

FIG. 38 *(MFR DISC)*

LINE AND CONTROL CKT

DRAWING ISSUE	
8A	STAND -
16B	RBB RBB PEG

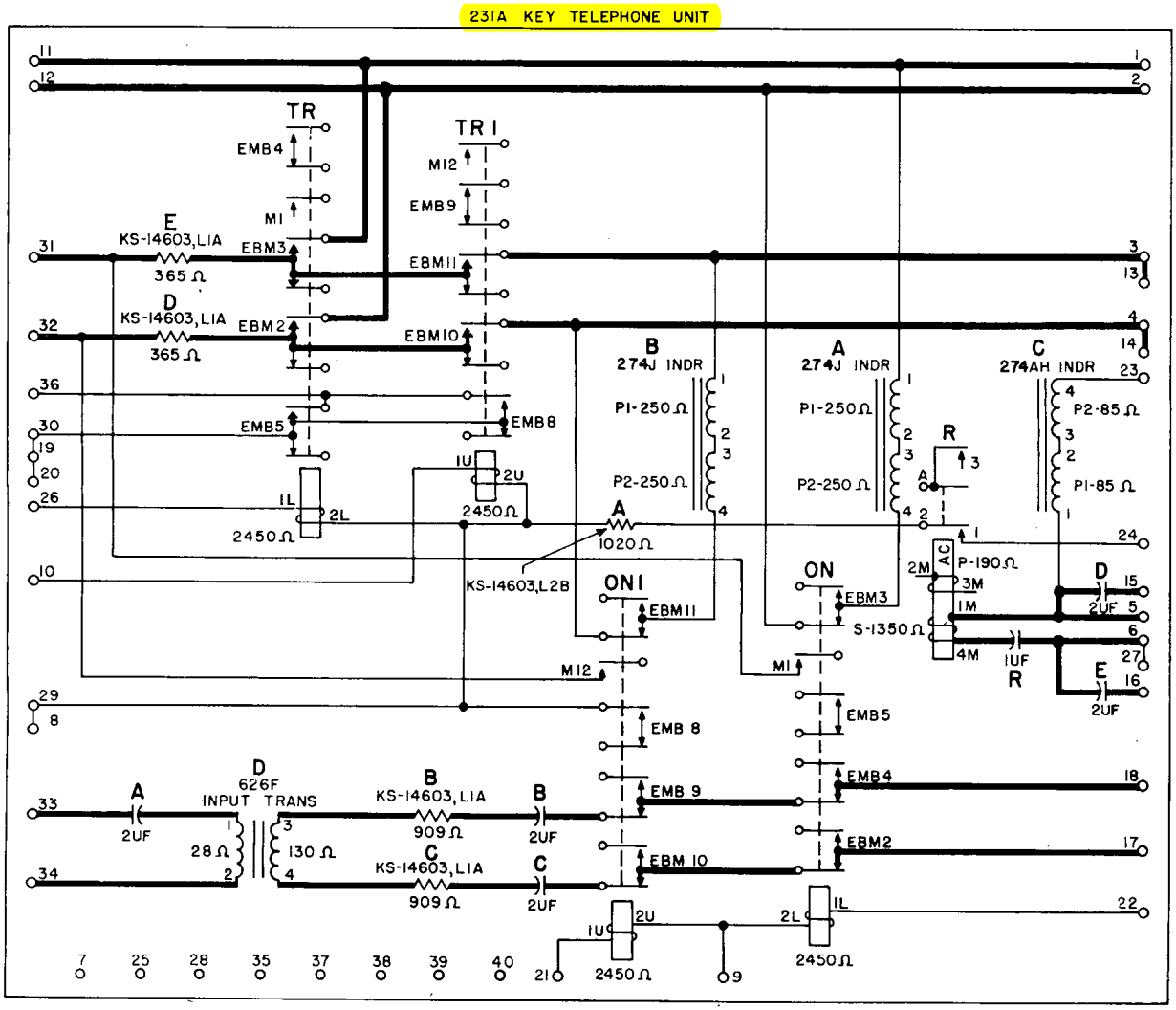

EQUIPMENT NOTES:

201. THIS KEY TEL UNIT IS DESIGNED FOR USE PRIMARILY IN CONTROL STATION CIRCUIT SD-69364-01,J95421

202. THIS KEY TEL UNIT IS 13 MODULES (5-21/32 IN.) WIDE.

48V NOMINAL
(44-50V)

KEY TELEPHONE UNITS CIRCUITS (231A KTU)	SD-69288-01-C35
BELL TELEPHONE LABORATORIES INCORPORATED — DWG SIZE 3S — PRINTED IN U. S. A.	

TCI Library- http://www.telephonecollectors.info/

FIG. 39 (MFR DISC.)

CENTRAL OFFICE OR PBX LINE CIRCUIT
(10 CIRCUITS)

DRAWING ISSUE	
8A	STLB -
11A	JWB DHC
12B	RIT DHC MET
16B	LGA LGB RGG

233A KEY TELEPHONE UNIT

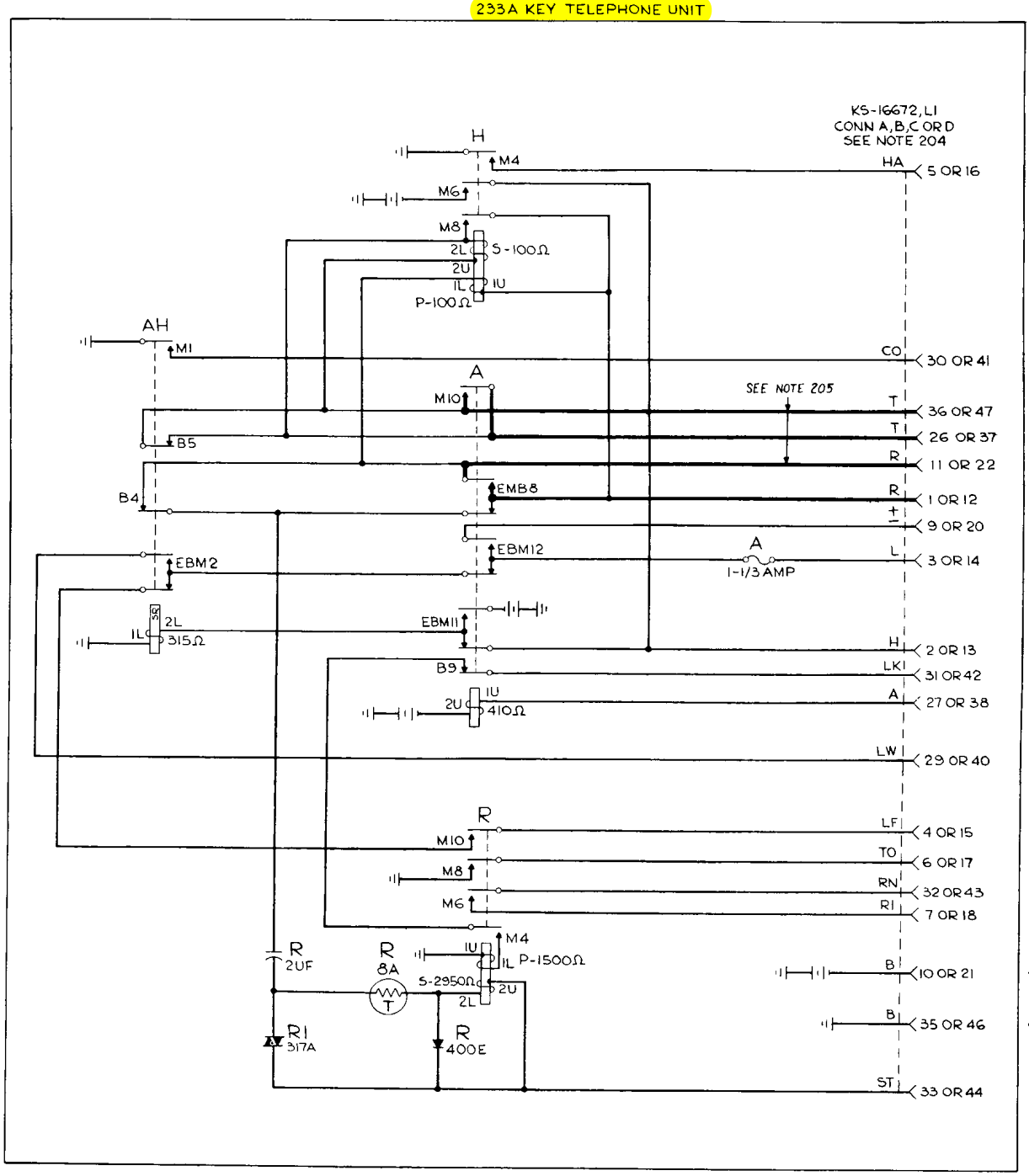

EQUIPMENT NOTES:

201. THIS KEY TEL UNIT IS USED PRIMARILY IN KEY TEL. SYS NO. 1A1, SD 69270-01, J53021.
202. THIS KEY TEL UNIT IS 23 IN. WIDE.
203. THE (H) RELAY SHALL BE EQUIPPED WITH A P-19A146 SHIELD.
204. CONN A FOR CKTS 1 AND 2
CONN B FOR CKTS 3 AND 4
CONN C FOR CKTS 5 AND 6
CONN D FOR CKTS 7 AND 8
CONN E FOR CKTS 9 AND 10
TERMINALS 1 TO 11 AND 26 TO 36 ARE FOR ODD NUMBERED CKTS.
TERMINALS 12 TO 22 AND 37 TO 47 ARE FOR EVEN NUMBERED CKTS
205. TO CO OR PBX.

14 – 26 V

KEY TELEPHONE UNITS CIRCUITS
(233A KTU)

SD-69288-01-C36

BELL TELEPHONE LABORATORIES INCORPORATED

DWG SIZE 3S

PRINTED IN U. S. A.

TCI Library- http://www.telephonecollectors.info/

FIG. 40
JOINT USE LINE CIRCUIT

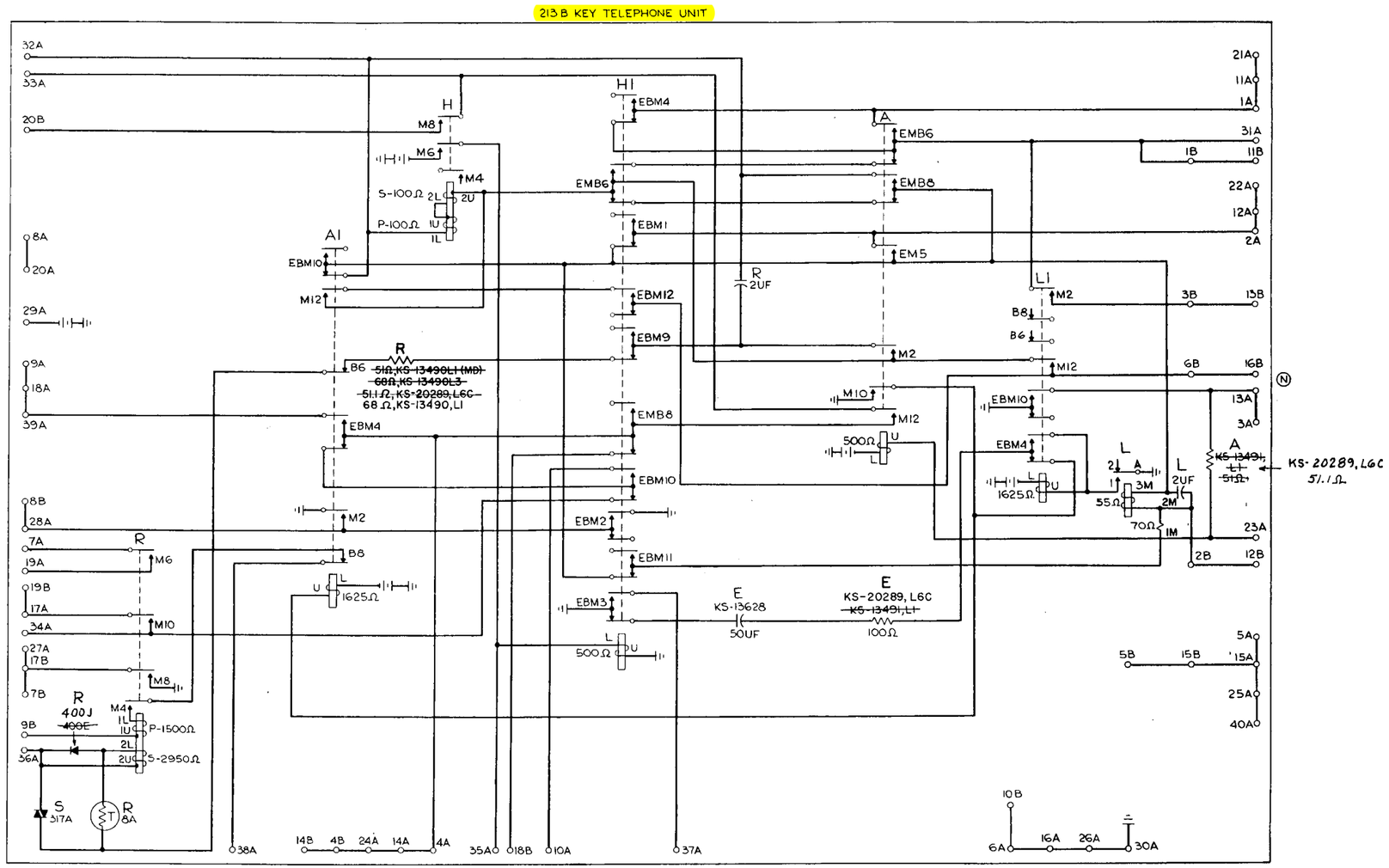

EQUIPMENT NOTES:

201. THIS KEY TEL UNIT IS DESIGNED FOR USE WITH KEY TEL SYSTEM NO. 1A & 1A1 AND KEY EQUIPMENTS NO. 100, NO. 101A, AND 101B CIRCUIT SHOWN ON DRAWING SD-69230-01, J53021.
202. THIS KEY TEL UNIT IS 11 MODULES (4-25/32 IN.) WIDE.
203. THE (H) RELAY IS EQUIPPED WITH A P-19A146 SHIELD.

DRAWING ISSUE	
8A	-
12B	
16B	

KEY TELEPHONE UNITS CIRCUITS
(213B KTU)

SD-69288-01-C37

BELL TELEPHONE LABORATORIES INCORPORATED

DWG SIZE 6S

PRINTED IN U. S. A.

E-7420 (3-57)

TCI Library- http://www.telephonecollectors.info/

DRAWING ISSUE	
8A	ST/BD -
9A	ST/MK DHC
11A	JWB DHC
12B	RJT AWC MEJ
16B	RBB PAB PEG

FIG. 41 (MFR DISC.)
ELECTRO-MECHANICAL FLASH, WINK, RING AND TIMEOUT CIRCUIT

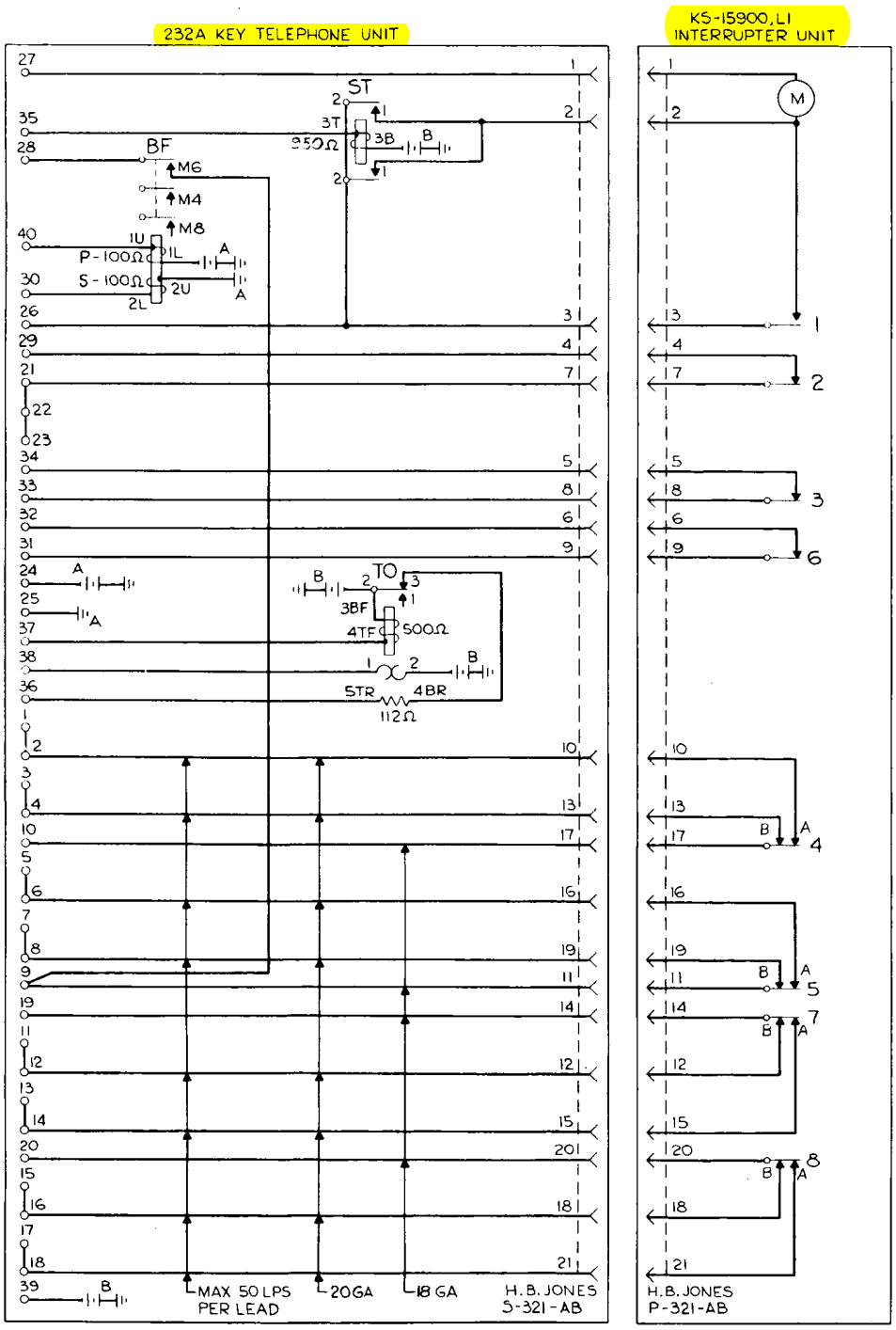

EQUIPMENT NOTES:

201. THIS KEY TEL UNIT IS DESIGNED FOR USE PRIMARILY IN KEY TEL SYSTEM NO.1A1, SD-69203-01, SD-69270-01, J53021.
202. THIS KEY TEL UNIT 8 MODULES (3-15/32 IN.) WIDE.
203. THE KS-15900,L1 UNIT IS NOT FURNISHED AS A PART OF THE 232A KEY TEL UNIT.

20V NOMINAL (14 - 26 V)

KEY TELEPHONE UNITS CIRCUITS (232A KTU)

SD-69288-01-C38

BELL TELEPHONE LABORATORIES INCORPORATED

DWG. SIZE 3S

PRINTED IN U.S.A.

TCI Library- http://www.telephonecollectors.info/

PART OF FIG. 42
SELECTOR & TRANSFER SINGLE LINK CKT

PART OF 234A KEY TEL UNIT

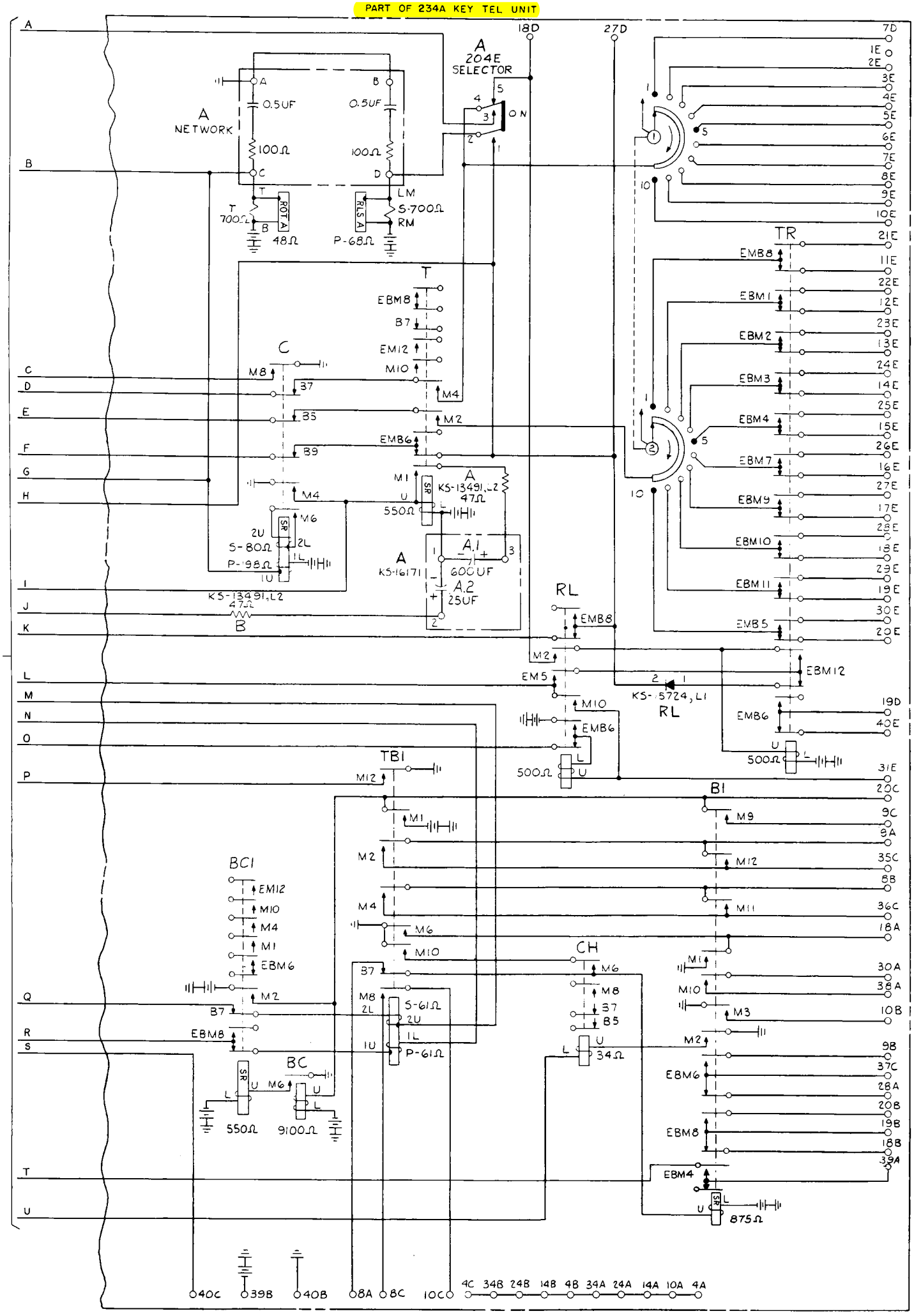

KEY TELEPHONE UNITS CIRCUITS
(234A KTU)

BELL TELEPHONE LABORATORIES INCORPORATED

SD-69288-01-C39

DRAWING ISSUE 8A

TCI Library- http://www.telephonecollectors.info/

PART OF FIG. 42
SELECTOR & TRANSFER SINGLE LINK CKT.

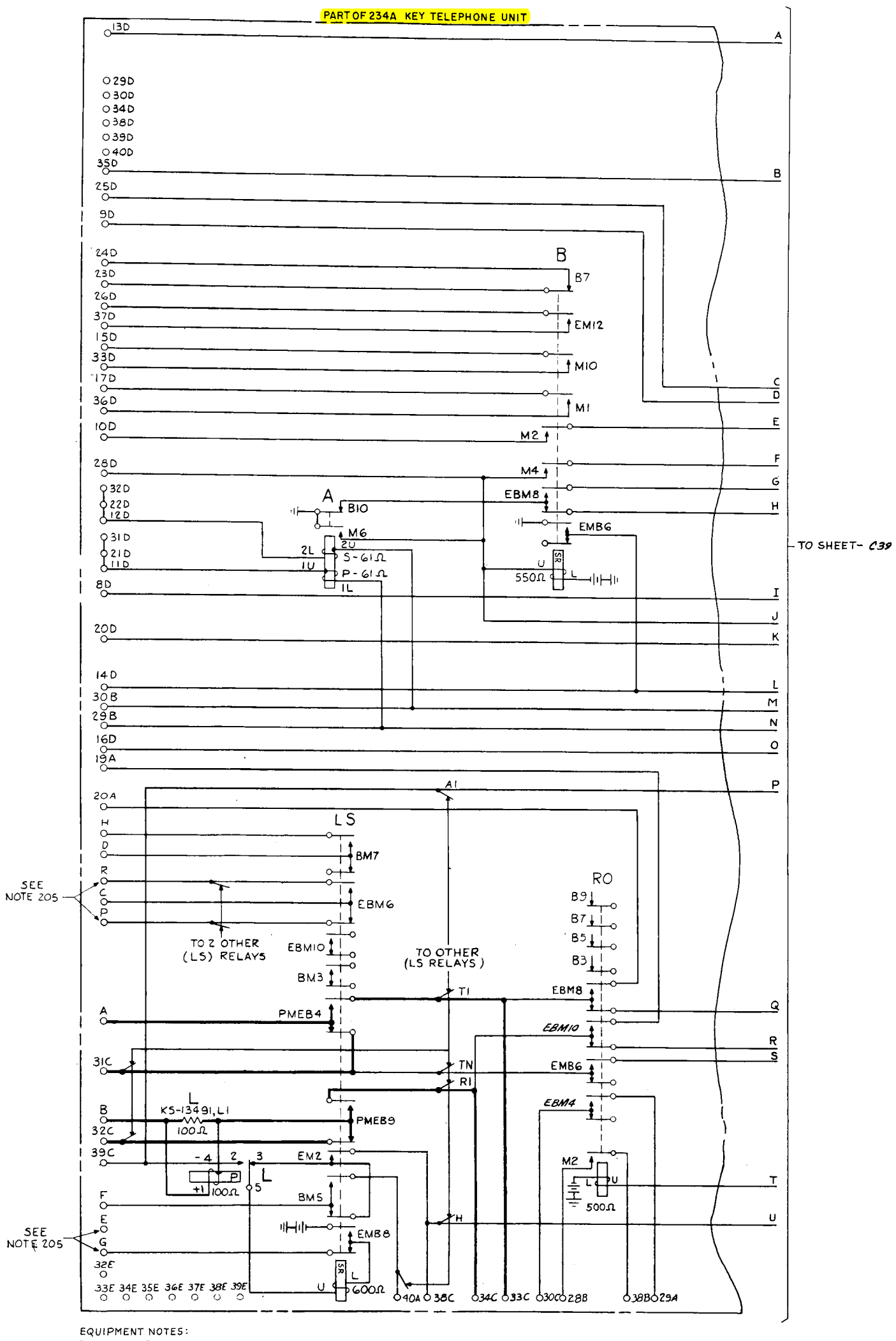

EQUIPMENT NOTES:

201. THIS KEY TEL UNIT IS DESIGNED FOR USE PRIMARILY IN KEY SYSTEM NO 6A, SD-69286-01, J53023.
202. THIS KEY TEL UNIT IS 23 IN. WIDE.
203.

REFERENCE DESIGNATION	PUNCHING CKT 1	CKT 2	CKT 3	CKT 4	CKT 5	CKT 6	CKT 7	CKT 8	CKT 9
A	1A	11A	21A	31A	1B	11B	21B	31B	1C
B	2A	12A	22A	32A	2B	12B	22B	32B	2C
C	3A	13A	23A	33A	3B	13B	23B	33B	3C
D	5A	15A	25A	35A	5B	15B	25B	35B	5C
E *	6A	16A	26A	36A	6B	16B	26B	36B	6C
F	7A	17A	27A	37A	7B	17B	27B	37B	7C
G *	11C	12C	13C	14C	15C	16C	17C	18C	19C
H	21C	22C	23C	24C	25C	26C	27C	28C	29C
P *	1D	2D	3D	1D	2D	3D	3D	2D	1D
R *	4D	5D	6D	4D	5D	6D	6D	5D	4D
* SEE NOTE 205									

204. SUFFIX AFTER NUMBER OF PUNCHING INDICATES TERMINAL STRIP.
205. EXTERNALLY STRAP ALL E PUNCHINGS; EXTERNALLY STRAP ALL G PUNCHINGS; EXTERNALLY STRAP ALL P PUNCHINGS; EXTERNALLY STRAP ALL R PUNCHINGS.

24V NOMINAL (20 - 26 V)

KEY TELEPHONE UNITS CIRCUITS
(234A KTU)

BELL TELEPHONE LABORATORIES INCORPORATED

FORM SIZE 6S

PRINTED IN U.S.A.

SD-69288-01-C40

DRAWING ISSUE 8A STYLE
11A FORM
17D
16B

TCI Library- http://www.telephonecollectors.info/

FIG. 43 (MFR. DISC.)
STATION LINE CONCENTRATOR FOR 18 LINES

235A KEY TEL UNIT

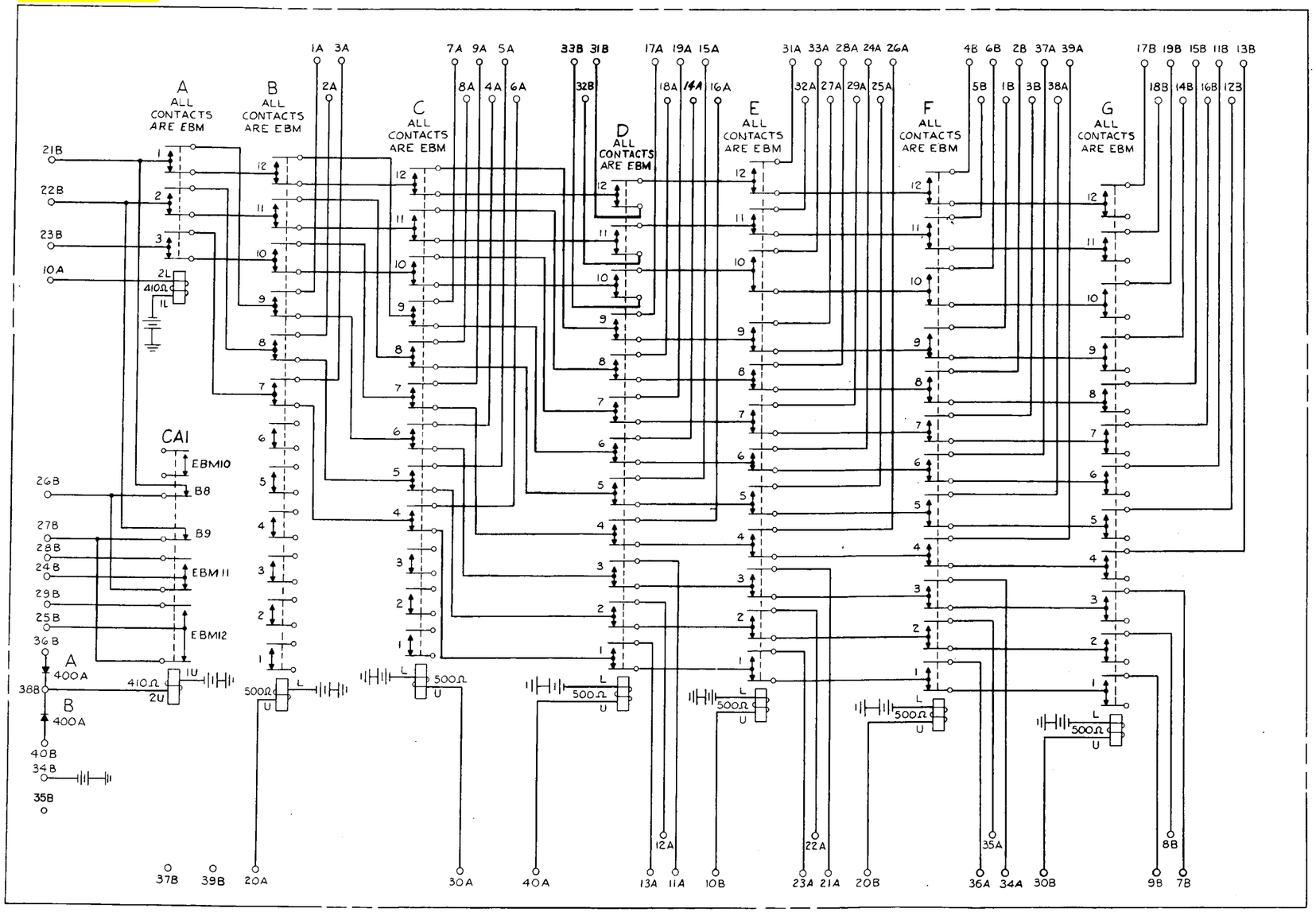

EQUIPMENT NOTES:

201. THIS KEY TEL UNIT IS PRIMARILY FOR USE IN KEY TEL SYSTEM NO. 6A, 1A1 AND 1A2 PER SD69387-01, SD69498-01 AND SD 69499-01

202. THIS KEY TEL UNIT IS 14 MODULES (6-3/32 IN.) WIDE.

DRAWING ISSUE	
8A	
11A	
16B	
17D	

KEY TELEPHONE UNITS CIRCUITS (235A KTU)

SD-69288-01-C41

BELL TELEPHONE LABORATORIES INCORPORATED

DWG SIZE 6S

TCI Library- http://www.telephonecollectors.info/

FIG. 44 (MFR. DISC.)

STATION LINE CONCENTRATOR FOR 30 LINES

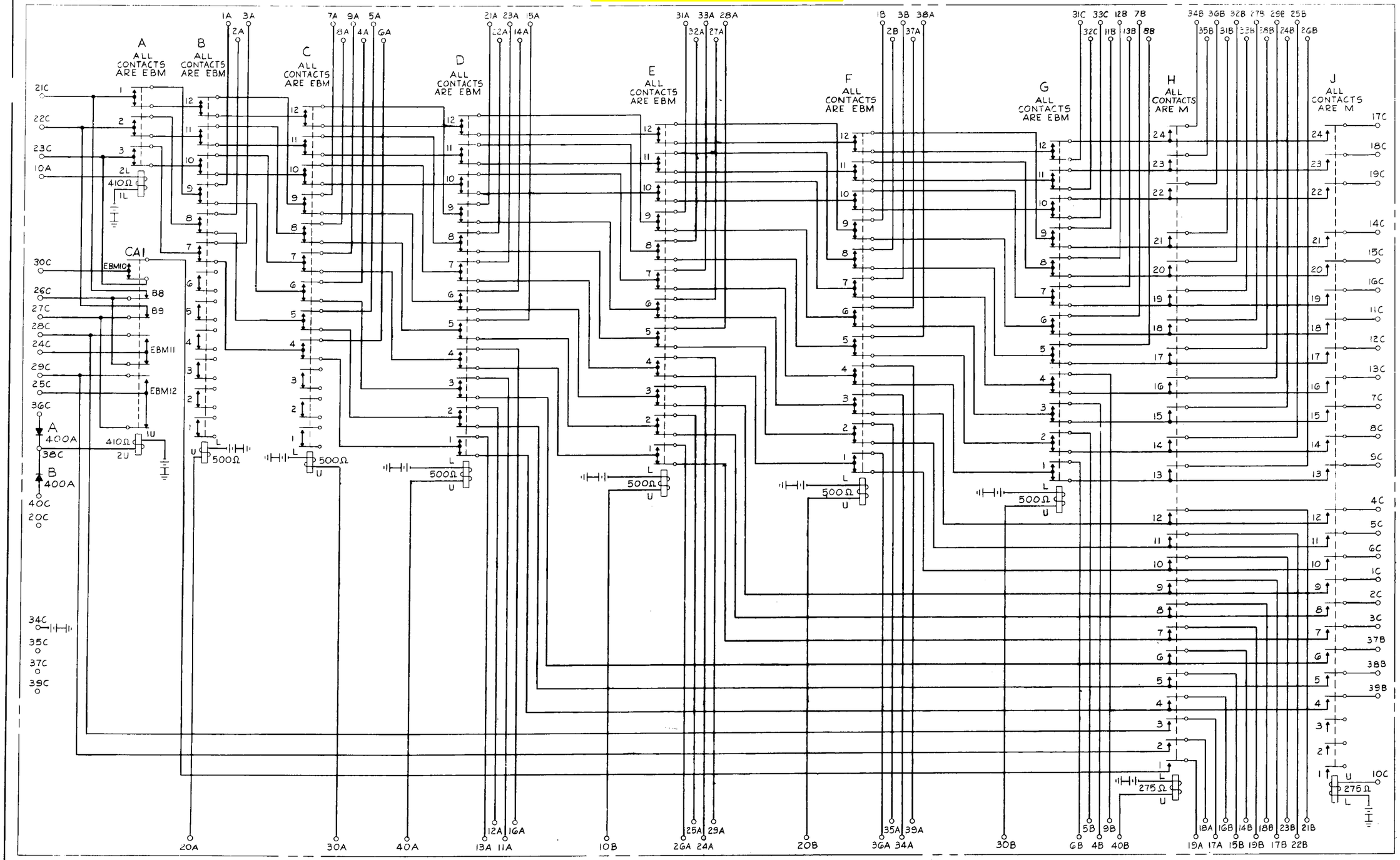

EQUIPMENT NOTES:

201. THIS KEY TEL UNIT IS PRIMARILY FOR USE IN KEY TEL SYSTEM NO. 6A, 1A1 AND 1A2 PER SD-69367-01, SD-69498-01 AND SD-69499-01

202. THIS KEY TEL UNIT IS 20 MODULES (8-23/32 IN.) WIDE.

-20V NOMINAL (14 - 26V)

DRAWING ISSUE	
8A	STORE -
11A	INTB DLK
16B	RBB RBB REG.

KEY TELEPHONE UNITS CIRCUITS (236A KTU)

SD-69288-01-C42

BELL TELEPHONE LABORATORIES INCORPORATED

DWG SIZE 6S

PRINTED IN U. S. A.

TCI Library- http://www.telephonecollectors.info/

FIG. 45
INWARD CONFERENCE CONTROL CKT

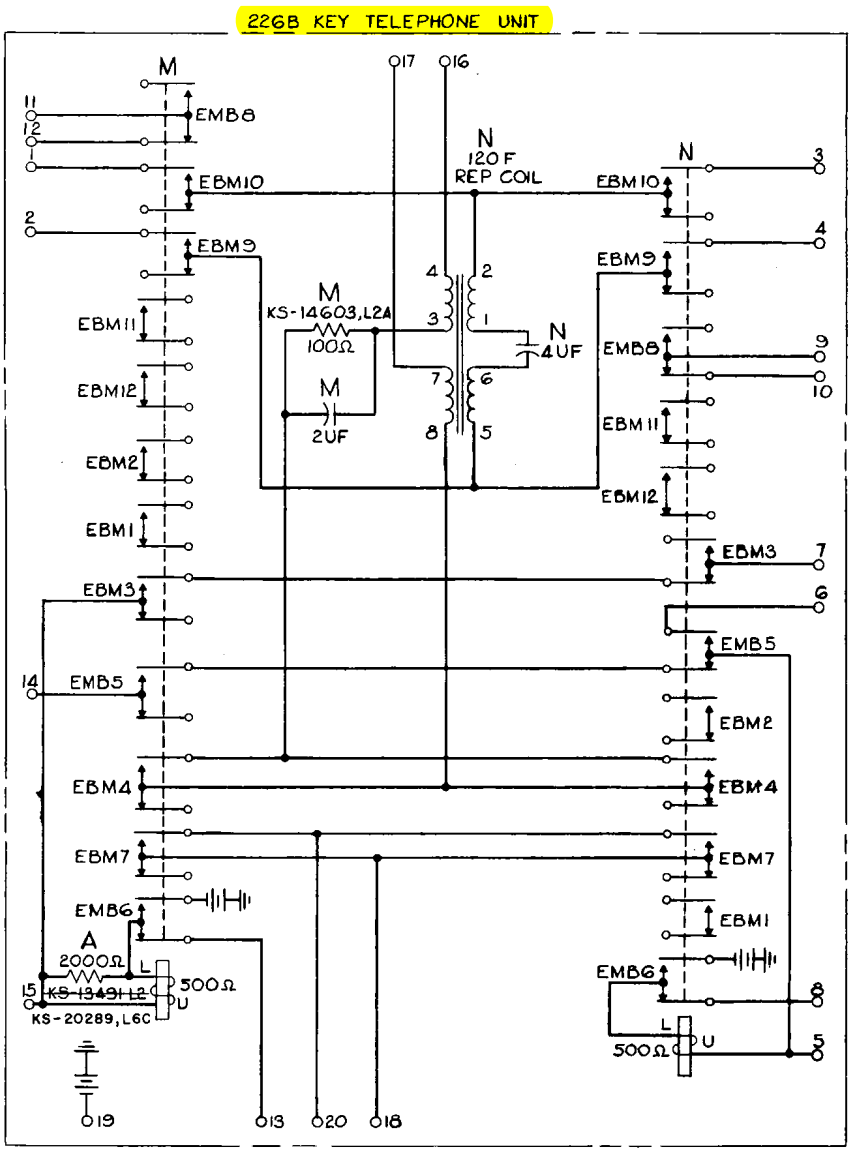

EQUIPMENT NOTES:

201. THIS KEY TEL UNIT IS DESIGNED FOR USE PRIMARILY IN KEY TEL SYSTEM NO. 6A, SD-69286-01, J53023.

202. THIS KEY TEL UNIT IS 8 MODULES (3-15/32 IN.) WIDE.

24V NOMINAL
(20-26V)

DRAWING ISSUE	
9A	
11A	
16B	

KEY TELEPHONE UNITS CIRCUITS
(226B KTU)

SD-69288-01-C43

BELL TELEPHONE LABORATORIES
INCORPORATED

DWG SIZE 3S

PRINTED IN U.S.A.

TCI Library- http://www.telephonecollectors.info/

FIG 46
CO OR PBX LINE CIRCUIT

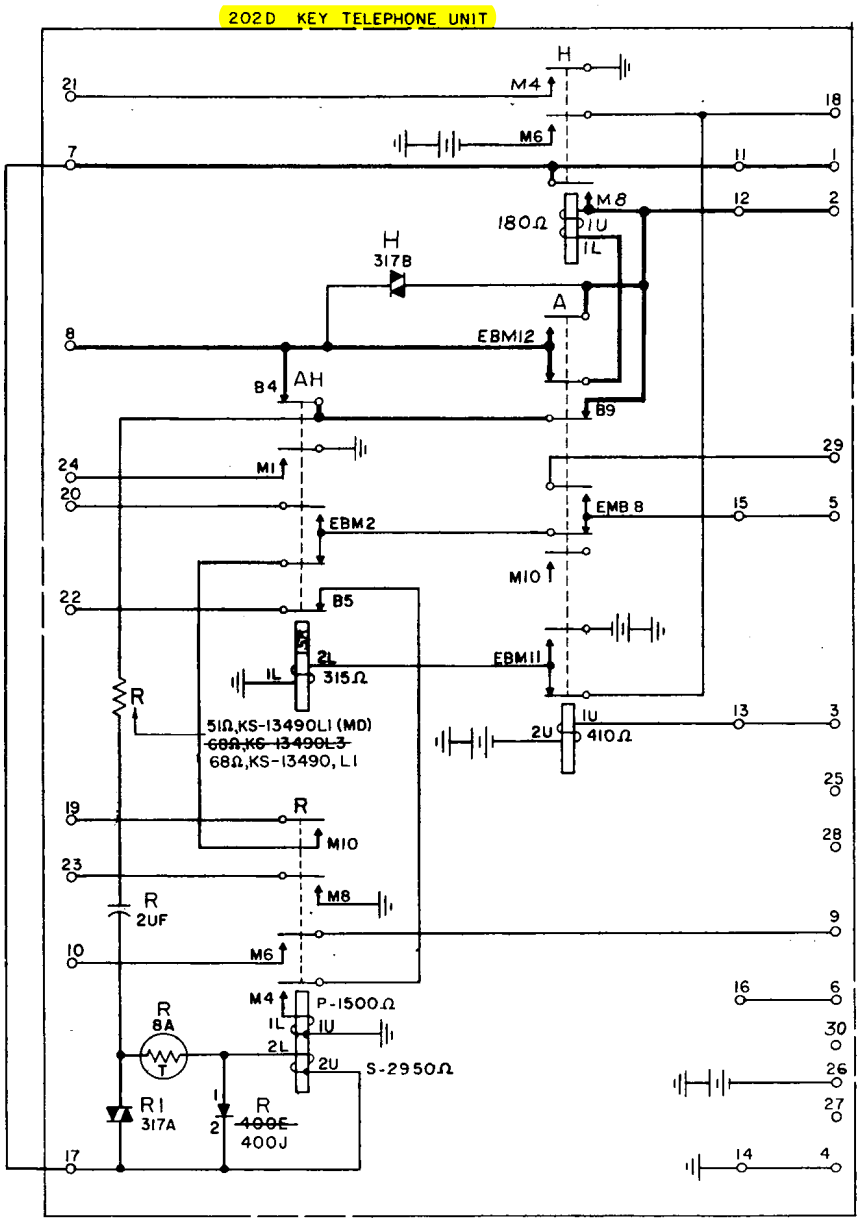

EQUIPMENT NOTES:
201. THIS KEY TEL UNIT IS DESIGNED FOR USE PRIMARILY IN KEY TEL SYSTEM NO 1A1, SD-69270-01, J53021.
202. THIS KEY TEL UNIT IS 6 MODULES (2-19/32 IN) WIDE.

20V NOMINAL
(14-26V)

DRAWING ISSUE	
10A	
12B	
16B	

KEY TELEPHONE UNITS CIRCUITS
(202D KTU)

SD-69288-01-C44

BELL TELEPHONE LABORATORIES
INCORPORATED

DWG SIZE 3S

PRINTED IN U.S.A.

TCI Library- http://www.telephonecollectors.info/

FIG. 47
CO OR PBX LINE CKT
(4 CKTS)

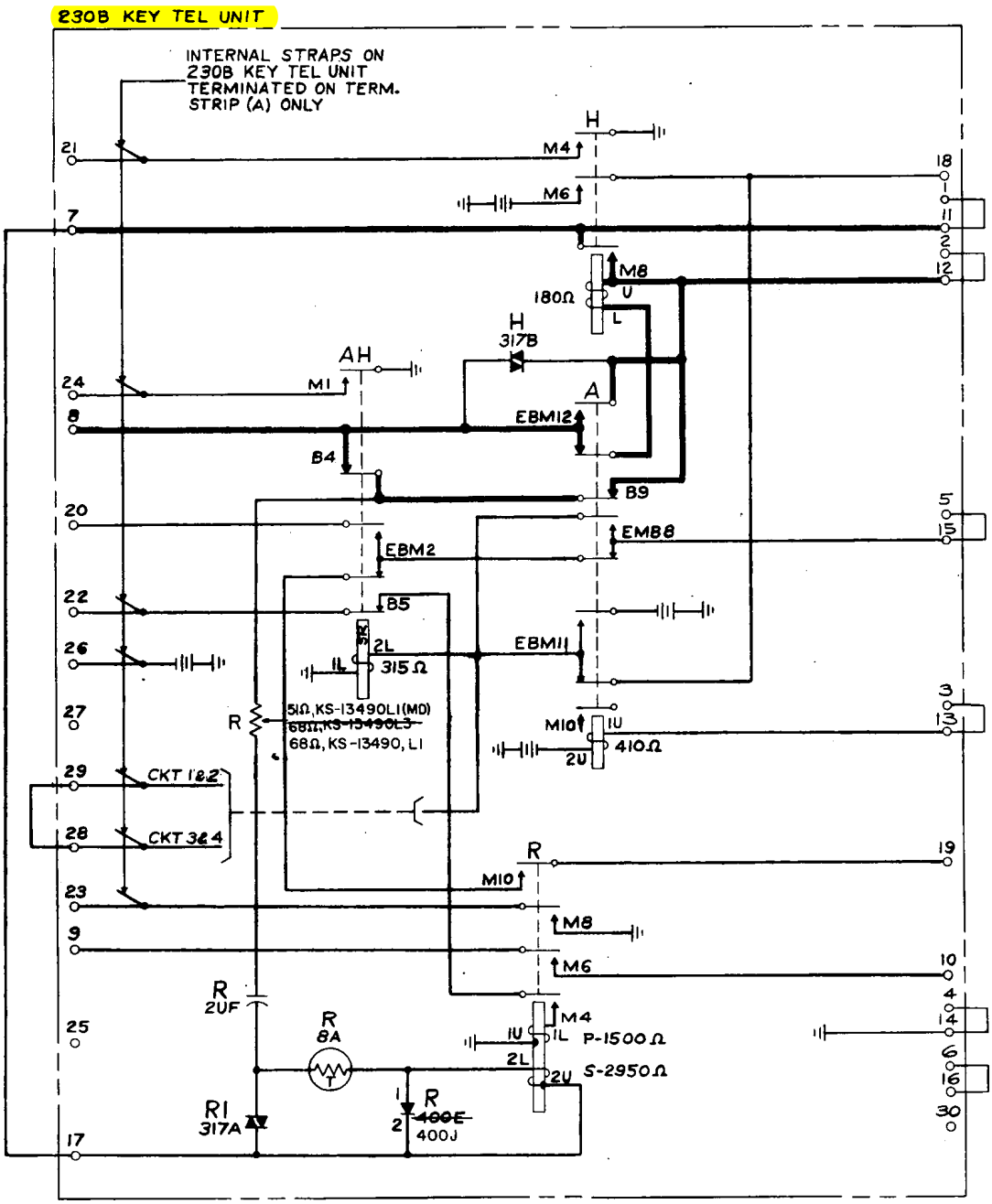

EQUIPMENT NOTES:

201. THIS KEY TEL UNIT IS DESIGNED FOR USE PRIMARILY IN KEY TEL SYSTEM NO. 1A1, SD-69270-01, J53021.

202. THIS KEY TEL UNIT IS 19 MODULES (8-9/32 IN.) WIDE.

203. TERMINALS 21 THROUGH 30 ARE ON TERMINAL STRIP (A) ONLY.

20V NOMINAL
(14-26V)

DRAWING ISSUE	
10A	
11A	
12B	
16B	
18D	

KEY TELEPHONE UNITS CIRCUITS
(230B KTU)

SD-69288-01-C45

BELL TELEPHONE LABORATORIES INCORPORATED

DWG SIZE 3S

PRINTED IN U.S.A.

TCI Library- http://www.telephonecollectors.info/

FIG. 48
CO OR PBX LINE CKT
(11 CKTS)

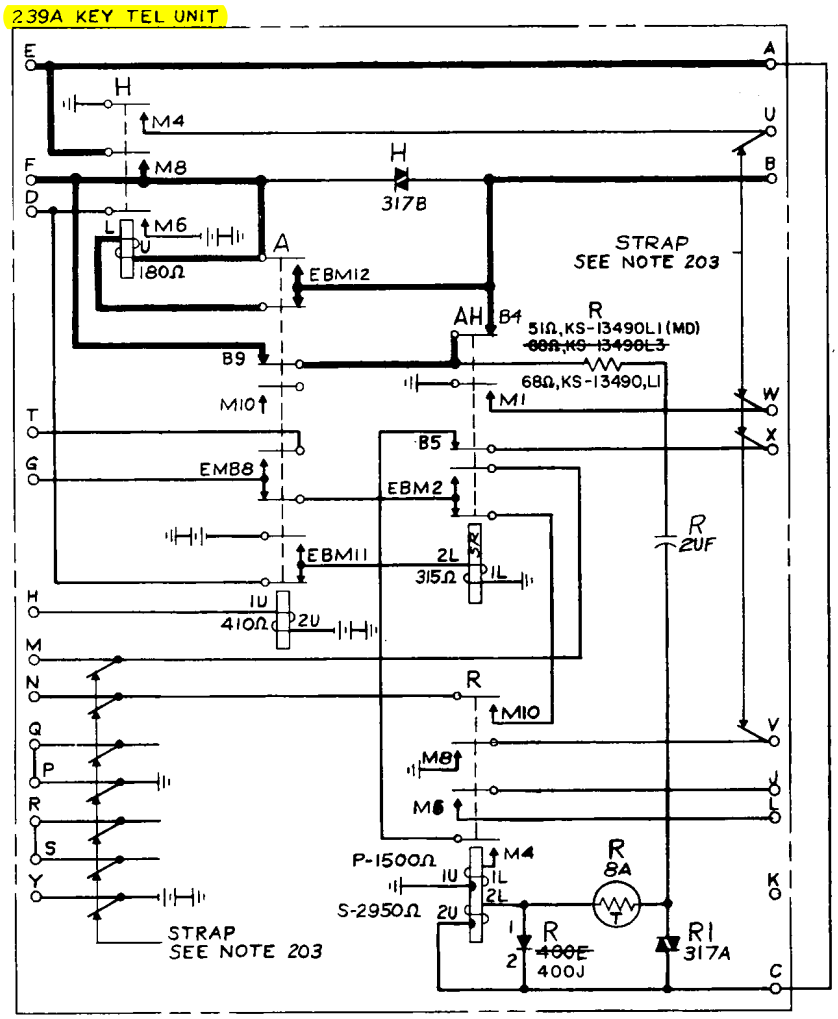

EQUIPMENT NOTES:

201. THIS KEY TEL UNIT IS DESIGNED FOR USE PRIMARILY IN KEY TEL SYSTEM NO. 1A1, SD-69270-01, J53021.

202. THIS KEY TEL UNIT IS 23 IN. WIDE.

203.

REF DESIG	PUNCHING										
	CKT 1	CKT 2	CKT 3	CKT 4	CKT 5	CKT 6	CKT 7	CKT 8	CKT 9	CKT 10	CKT 11
A	7A	27A	7B	27B	7C	27C	7D	27D	7E	27E	7F
B	8A	28A	8B	28B	8C	28C	8D	28D	8E	28E	8F
C	17A	37A	17B	37B	17C	37C	17D	37D	17E	37E	17F
D	21F	22F	23F	24F	25F	31F	32F	33F	34F	35F	36F
E	1A,11A	21A,31A	1B,11B	21B,31B	1C,11C	21C,31C	1D,11D	21D,31D	1E,11E	21E,31E	1F,11F
F	2A,12A	22A,32A	2B,12B	22B,32B	2C,12C	22C,32C	2D,12D	22D,32D	2E,12E	22E,32E	2F,12F
G	5A,15A	25A,35A	5B,15B	25B,35B	5C,15C	25C,35C	5D,15D	25D,35D	5E,15E	25E,35E	5F,15F
H	3A,13A	23A,33A	3B,13B	23B,33B	3C,13C	23C,33C	3D,13D	23D,33D	3E,13E	23E,33E	3F,13F
J	20A	40A	20B	40B	20C	40C	20D	40D	20E	40E	20F
K	18A	38A	18B	38B	18C	38C	18D	38D	18E	38E	18F
L	19A	39A	19B	39B	19C	39C	19D	39D	19E	39E	19F
M	15G		16G		17G		18G		19G		20G
N	5G		6G		7G		8G		9G		10G
P	9A		9B		9C		9D		9E		9F
Q	4A,14A,24A,34A		4B,14B,24B,34B		4C,14C,24C,34C		4D,14D,24D,34D		4E,14E,24E,34E		4F,14F
R	6A,16A,26A,36A		6B,16B,26B,36B		6C,16C,26C,36C		6D,16D,26D,36D		6E,16E,26E,36E		6F,16F
S	29A		29B		29C		29D		29E		29F
T	30A,25G		30B,26G		30C,27G		30D,28G		30E,29G		30F,30G
Y	10A		10B		10C		10D		10E		10F
U	1G				11G				21G		
V	2G				12G				22G		
W	3G				13G				23G		
X	4G				14G				24G		

REMOVABLE STRAPS ON THE FOLLOWING TERMS:

TERM. STRIPS (A), (B), (C), (D) AND (E), 1-11, 21-31, 2-12, 22-32, 3-13, 23-33, 4-14-24-34, 5-15, 25-35, 6-16-26-36, 7-17, 27-37.
TERM. STRIP (F), 1-11, 2-12, 3-13, 4-14, 5-15, 6-16, 7-17.
TERM. STRIP (G), 1-11-21, 2-12-22, 3-13-23, 4-14-24.

20V NOMINAL
(14-26V)

KEY TELEPHONE UNITS CIRCUITS
(239A KTU)

SD-69288-01-C46

BELL TELEPHONE LABORATORIES
INCORPORATED

DWG SIZE 3S

PRINTED IN U.S.A.

DRAWING ISSUE
11A
12B
16B

TCI Library- http://www.telephonecollectors.info/

FIG. 49
9 CO OR PBX LINE CKT

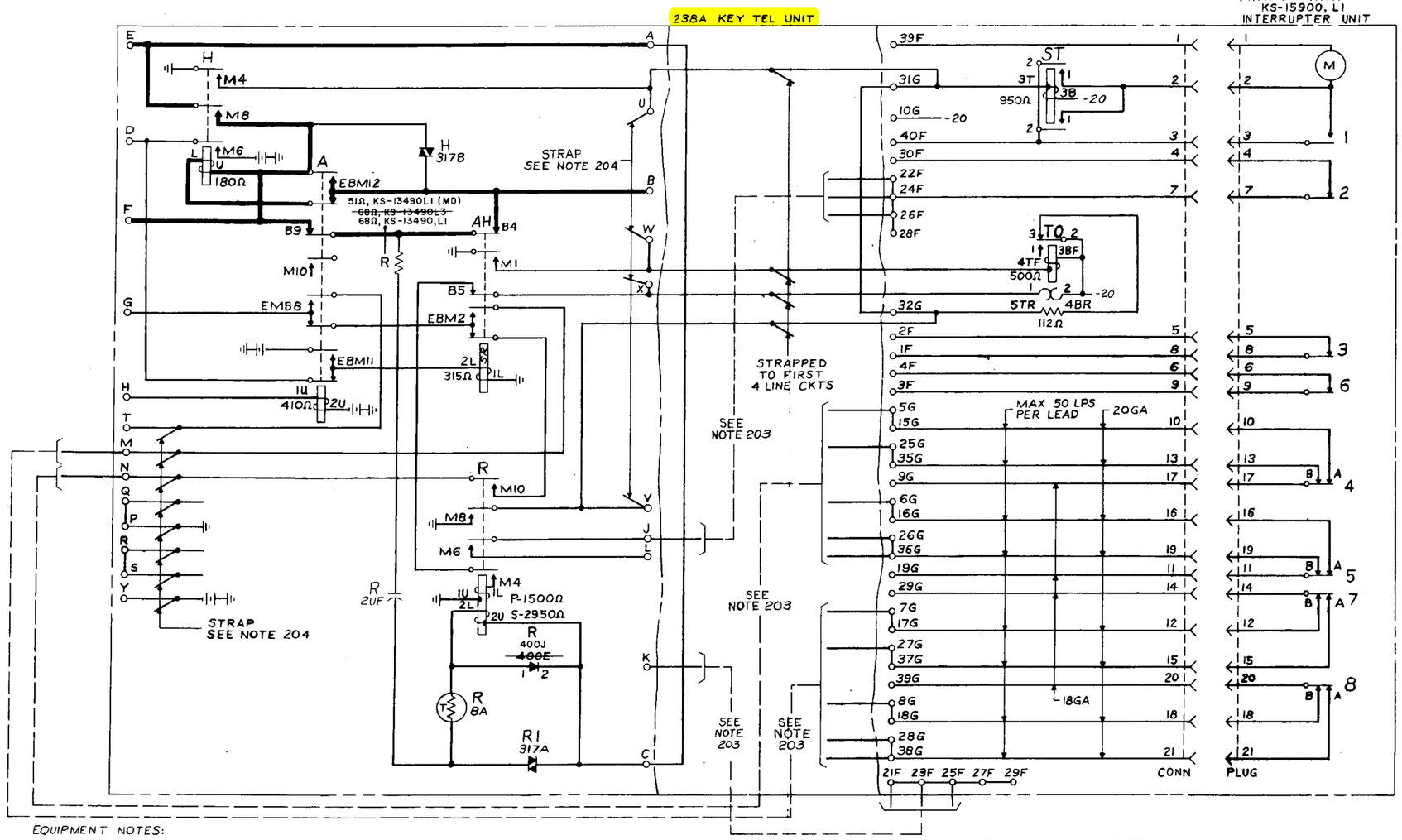

EQUIPMENT NOTES:

201. THIS KEY TEL UNIT IS DESIGNED FOR USE PRIMARILY IN KEY TEL SYSTEM NO. 1A1, SD-69203-01, SD-69270-01, J53021.

202. THIS KEY TEL UNIT IS 23 IN. WIDE.

203. PROVIDE REMOVABLE STRAPS ON FOLLOWING PCHGS: 20A-40A-20B-40B-22F, 20C-40C-20D-40D-24F, 20E-26F, 18A-38A-18B-38B-21F, 18C-38C-18D-38D-23F, 18E-25F. 6F-7G, 7F-8G, 8F-27G, 9F-28G, 10F-38G. 36E-5G, 37E-6G, 38E-25G, 39E-26G, 40E-36G.

204.

REF DESIG	PUNCHING								
	CKT 1	CKT 2	CKT 3	CKT 4	CKT 5	CKT 6	CKT 7	CKT 8	CKT 9
A	7A	27A	7B	27B	7C	27C	7D	27D	7E
B	8A	28A	8B	28B	8C	28C	8D	28D	8E
C	17A	37A	17B	37B	17C	37C	17D	37D	17E
D	21E	22E	23E	24E	25E	31E	32E	33E	34E
E	1A,11A	21A,31A	1B,11B	21B,31B	1C,11C	21C,31C	1D,11D	21D,31D	1E,11E
F	2A,12A	22A,32A	2B,12B	22B,32B	2C,12C	22C,32C	2D,12D	22D,32D	2E,12E
G	5A,15A	25A,35A	5B,15B	25B,35B	5C,15C	25C,35C	5D,15D	25D,35D	5E,15E
H	3A,13A	23A,33A	3B,13B	23B,33B	3C,13C	23C,33C	3D,13D	23D,33D	3E,13E
J	20A	40A	20B	40B	20C	40C	20D	40D	20E
K	18A	38A	18B	38B	18C	38C	18D	38D	18E
L	19A	39A	19B	39B	19C	39C	19D	39D	19E
M	6F		7F		8F		9F		10F
N	36E		37E		38E		39E		40E
P	9A		9B		9C		9D		9E
Q	4A,14A,24A,34A		4B,14B,24B,34B		4C,14C,24C,34C		4D,14D,24D,34D		4E,14E
R	6A,16A,26A,36A		6B,16B,26B,36B		6C,16C,26C,36C		6D,16D,26D,36D		6E,16E
S	29A		29B		29C		29D		29E
T	30A,16F		30B,17F		30C,18F		30D,19F		30E,20F
Y	10A		10B		10C		10D		10E
U	1G				11G				21G
V	2G				12G				22G
W	3G				13G				23G
X	4G				14G				24G

REMOVABLE STRAPS ON THE FOLLOWING TERMS:
TERM. STRIPS (A), (B), (C) AND (D), 1-11, 21-31, 2-12, 22-32, 3-13, 23-33, 4-14-24-34, 5-15, 25-35, 6-16-26-36, 7-17, 27-37.
TERM. STRIP (E), 1-11, 2-12, 3-13, 4-14, 5-15, 6-16, 7-17.
TERM. STRIP (G), 1-11-21, 2-12-22, 3-13-23, 4-14-24.

DRAWING ISSUE
11A
12B
16B
17D

KEY TELEPHONE UNITS CIRCUITS
(238A KTU)

SD-69288-01-C47

BELL TELEPHONE LABORATORIES INCORPORATED

DWG SIZE 6S

PRINTED IN U.S.A.

TCI Library- http://www.telephonecollectors.info/

DRAWING ISSUE	
11A	JWB DHC
14B	PG DHC ARM
16B	RBB RBB 1/64

FIG. 50 (MFR DISC.)
BRIDGING CIRCUIT

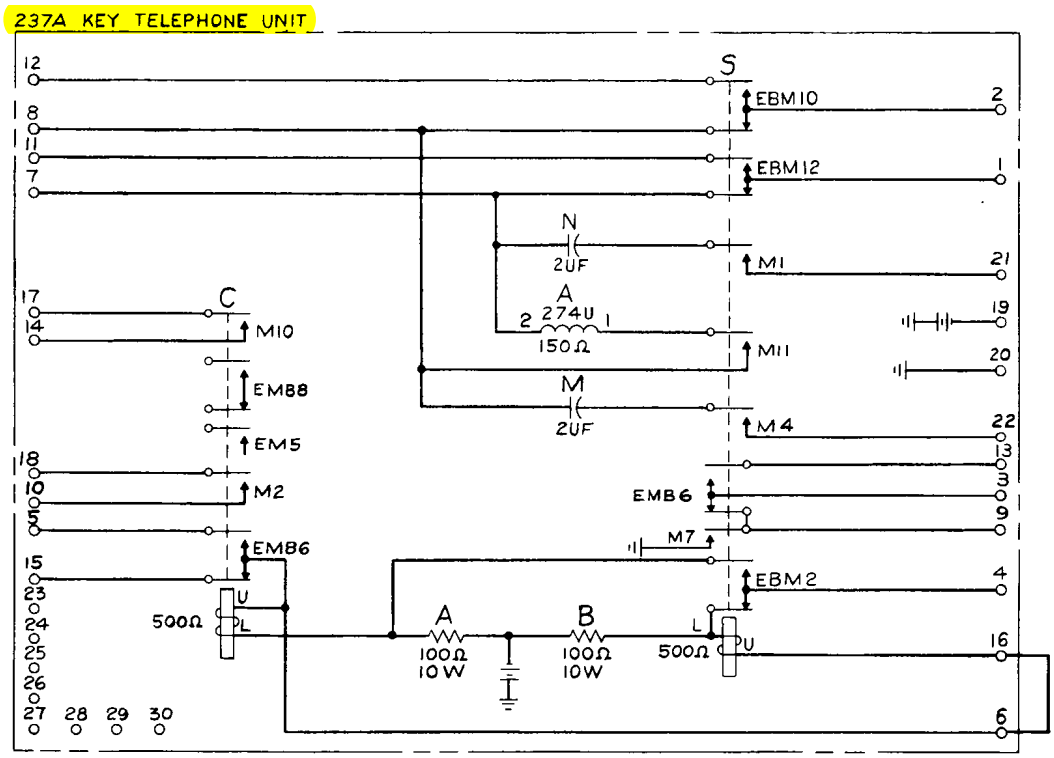

EQUIPMENT NOTES:

201. THIS KEY TEL UNIT IS DESIGNED FOR USE PRIMARILY IN KEY TEL SYSTEM NO. 1A1, SD-69270.

202. THIS KEY TEL UNIT IS 6 MODULES (2-19/32 IN.) WIDE.

20V NOMINAL
(14-26V)

KEY TELEPHONE UNITS CIRCUITS (237A KTU)	SD-69288-01-C48
BELL TELEPHONE LABORATORIES INCORPORATED — DWG SIZE 3S	PRINTED IN U.S.A.

E-7484-5 (9-66)

TCI Library- http://www.telephonecollectors.info/

FIG. 51 (MFR DISC.)

FLASH, WINK, RING AND TIMEOUT CIRCUIT
(ELECTRO-MECHANICAL)
(THIS KEY TEL UNIT NOT TO EXCEED 200 LAMPS)

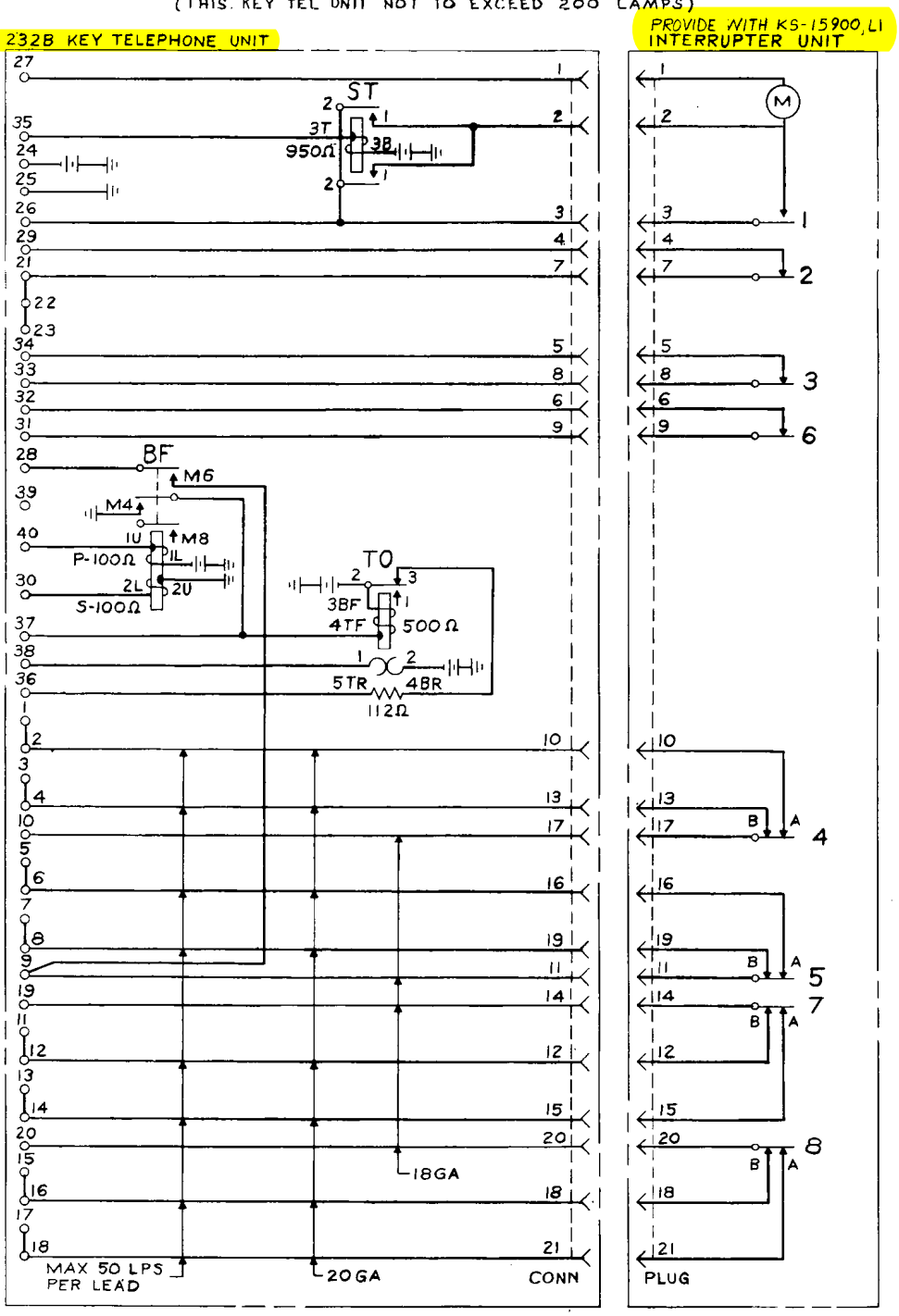

EQUIPMENT NOTES:

201. THIS KEY TEL UNIT IS DESIGNED FOR USE PRIMARILY *STATION* TEL SYSTEMS *VISUAL AND AUDIBLE SIGNAL CIRCUITS, SD-69294-01*

202. THIS KEY TEL UNIT IS 8 MODULES (3-15/32 IN.) WIDE.

203. THE KS-15900,L1 UNIT IS NOT FURNISHED AS A PART OF THE 232B KEY TEL UNIT.

20V NOMINAL
(14-26V)

DRAWING ISSUE	
11A	JWB DHC
12B	RJT DHC MGT
13B	RCR DHC ARM
16B	RBB RBB REG.
17D	RBB APB HJJ

KEY TELEPHONE UNITS CIRCUITS

SD-69288-01-C49

BELL TELEPHONE LABORATORIES INCORPORATED

DWG SIZE 3S

PRINTED IN U.S.A.

TCI Library- http://www.telephonecollectors.info/

DRAWING ISSUE	
12B	RJT DMC MEJ
16B	RBB RBB RLG

FIG. 52
AUXILIARY RELAY UNIT

229B KEY TELEPHONE UNIT

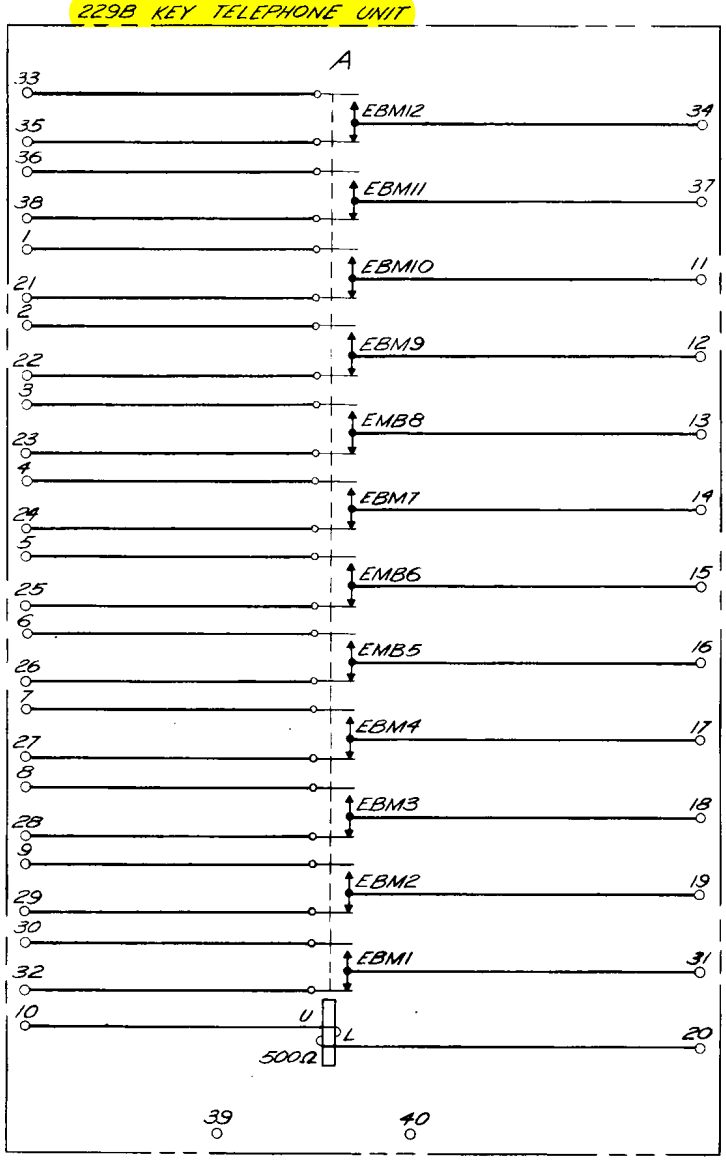

EQUIPMENT NOTES:

201. THIS KEY TELEPHONE UNIT IS DESIGNED FOR USE PRIMARILY IN 4-WIRE SUBSCRIBER LINE CIRCUITS, SD-69414-01.

202. THIS KEY TELEPHONE UNIT IS 7 MODULES (3-1/32 IN.) WIDE.

24V NOMINAL
(20-26V)

KEY TELEPHONE UNIT CIRCUIT (229B KTU)	SD-69288-01-C50
BELL TELEPHONE LABORATORIES INCORPORATED — DWG SIZE 3S — PRINTED IN U.S.A.	

TCI Library- http://www.telephonecollectors.info/

DRAWING ISSUE	
12B	P.T. DHC AKF
14B	PG DHC ARM
16B	P.B.B. P.B.B. T.G.

FIG. 53 (MFR DISC.)
LINE TRANSFER CIRCUIT

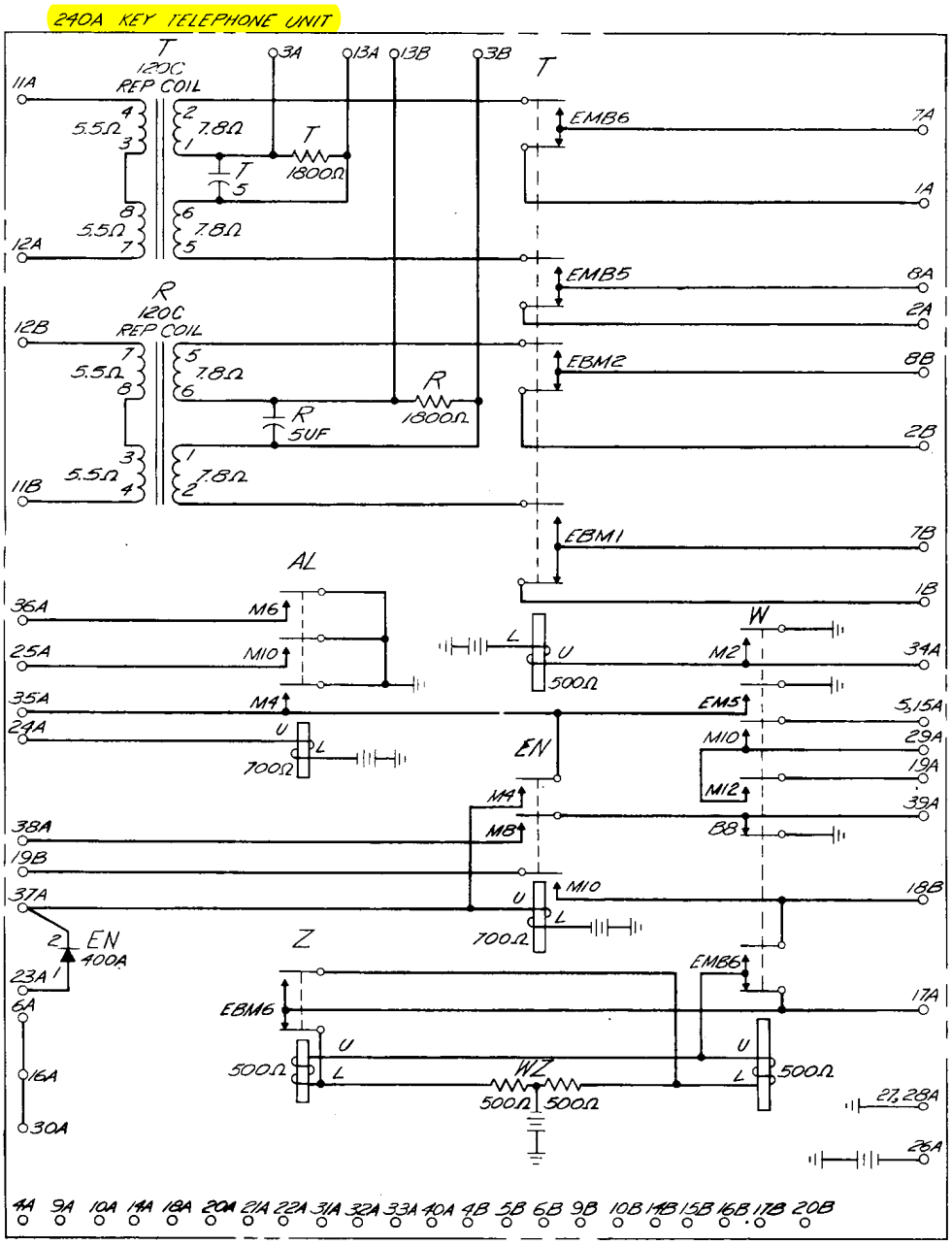

EQUIPMENT NOTES:

201. THIS KEY TEL UNIT IS DESIGNED FOR USE PRIMARILY IN KEY TEL SYSTEMS NO. 1A1, SD-69422-01.

202. THIS KEY TEL UNIT IS 16 MODULES (6-31/32 IN.) WIDE.

20V NOMINAL
(20-26V)

KEY TELEPHONE UNIT CIRCUIT
(240A KTU)

SD-69288-01-C51

BELL TELEPHONE LABORATORIES INCORPORATED

DWG SIZE 3S

PRINTED IN U.S.A.

E-7424-3 (9-55)

TCI Library- http://www.telephonecollectors.info/

FIG. 54 (MFR DISC)
AUXILARY LINE
TRANSFER CIRCUIT

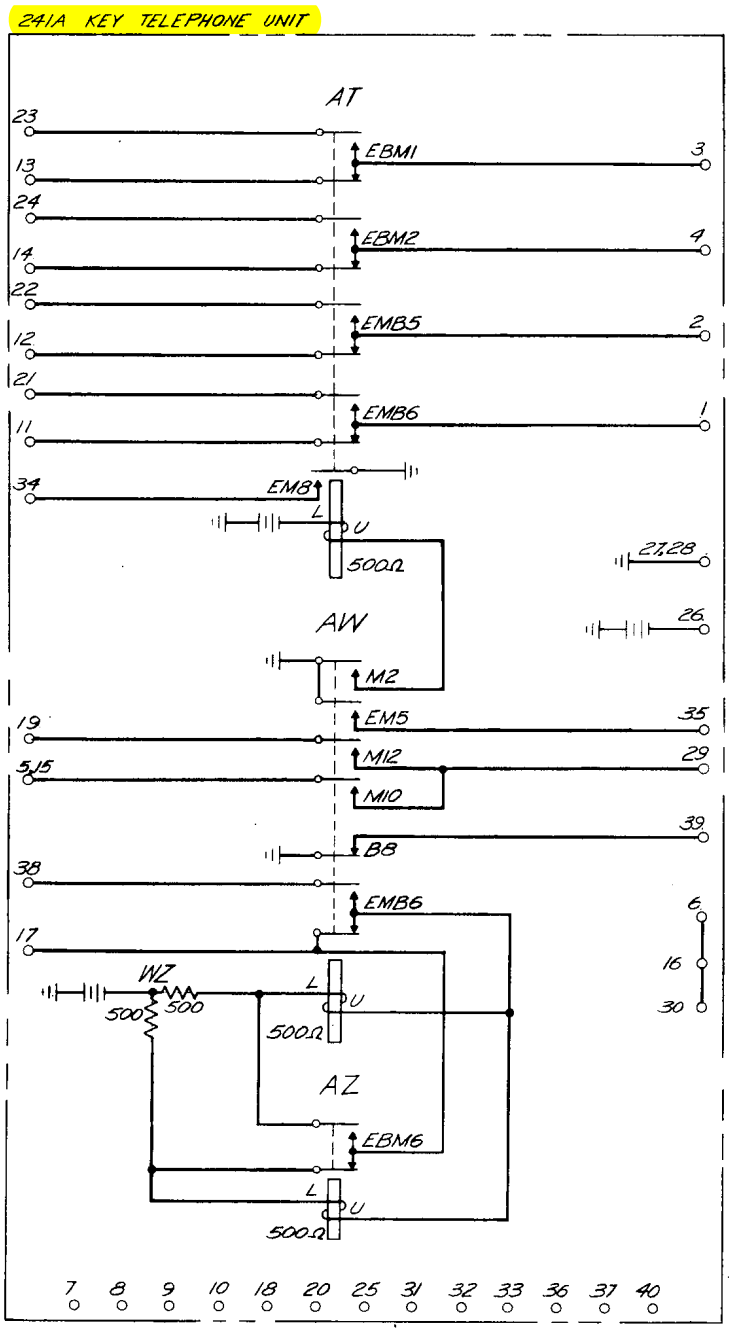

EQUIPMENT NOTES:

201. THIS KEY TEL UNIT IS DESIGNED FOR USE PRIMARILY IN KEY TEL SYSTEMS NO. 1A1, SD-69422-01.

202. THIS KEY TEL UNIT IS 7 MODULES (3-1/32 IN.) WIDE.

20V NOMINAL
(20-26V)

DRAWING ISSUE	
12B	RJT DHC REV
14B	EFS DHC ARM
16B	PBB PBB PLG
17D	PBB PBB HW

KEY TELEPHONE UNIT CIRCUIT
(241A KTU)

SD-69288-01-C52

BELL TELEPHONE LABORATORIES INCORPORATED

DWG SIZE 3S

PRINTED IN U.S.A.

E-7434-2 (2-59)

TCI Library- http://www.telephonecollectors.info/

FIG. 55
4-WIRE LINE CIRCUIT
(TOUCH-TONE CALLING SETS)

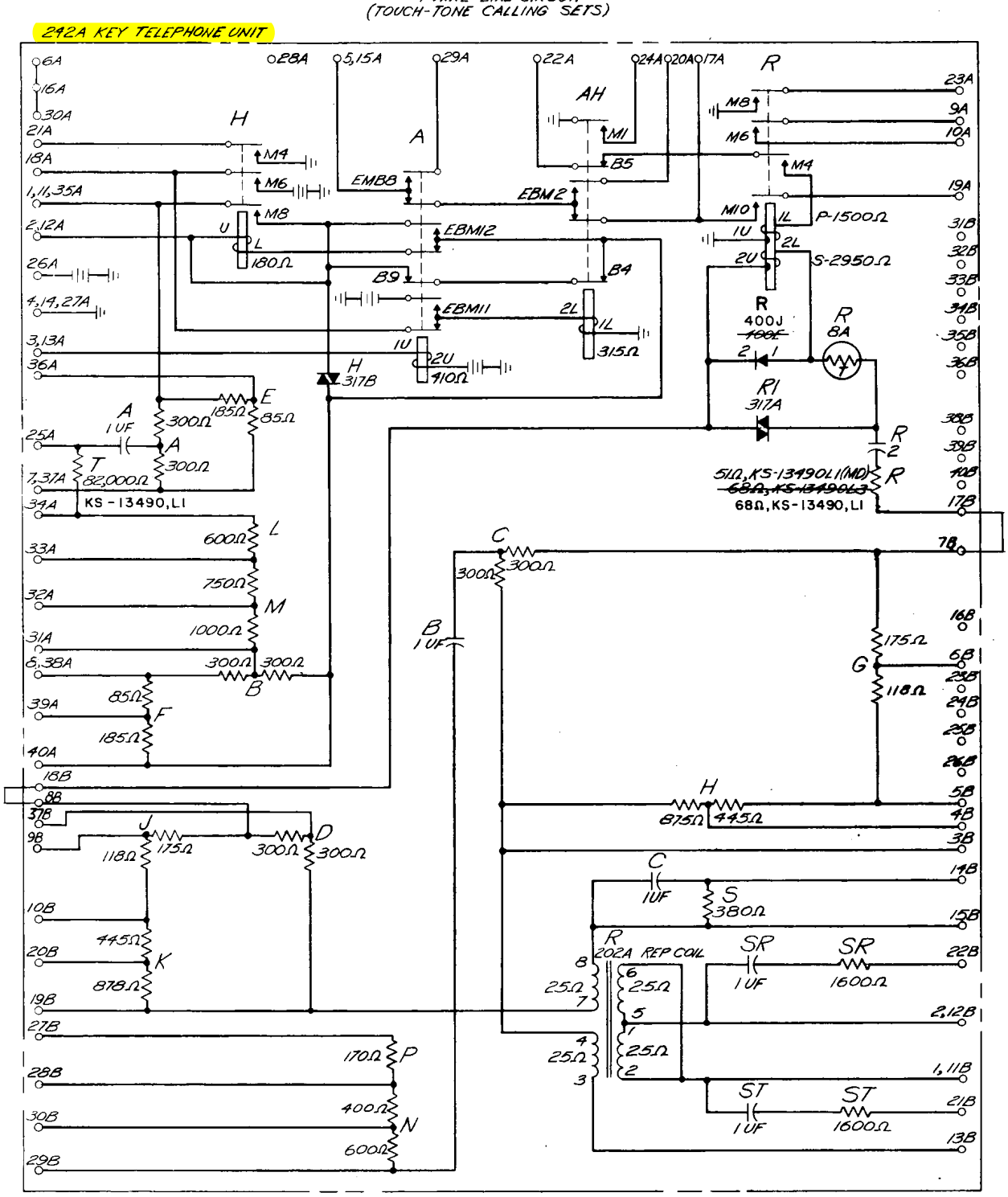

EQUIPMENT NOTES:

201. THIS KEY TEL UNIT IS DESIGNED FOR USE PRIMARILY IN 4 WIRE SUBSCRIBER LINE CIRCUITS SD-69414-01.

202. THIS KEY TEL UNIT IS 19 MODULES (8-9/32 IN.) WIDE.

DRAWING ISSUE	
12B	
13B	
16B	

KEY TELEPHONE UNIT CIRCUIT
(242A KTU)

SD-69288-01-C53

BELL TELEPHONE LABORATORIES INCORPORATED

DWG SIZE 3S

PRINTED IN U.S.A.

E-7434-3 (9-69)

TCI Library- http://www.telephonecollectors.info/

FIG. 56 (MFR DISC)
4-WIRE LINE CIRCUIT
(ROTARY DIAL SETS)

243A KEY TELEPHONE UNIT

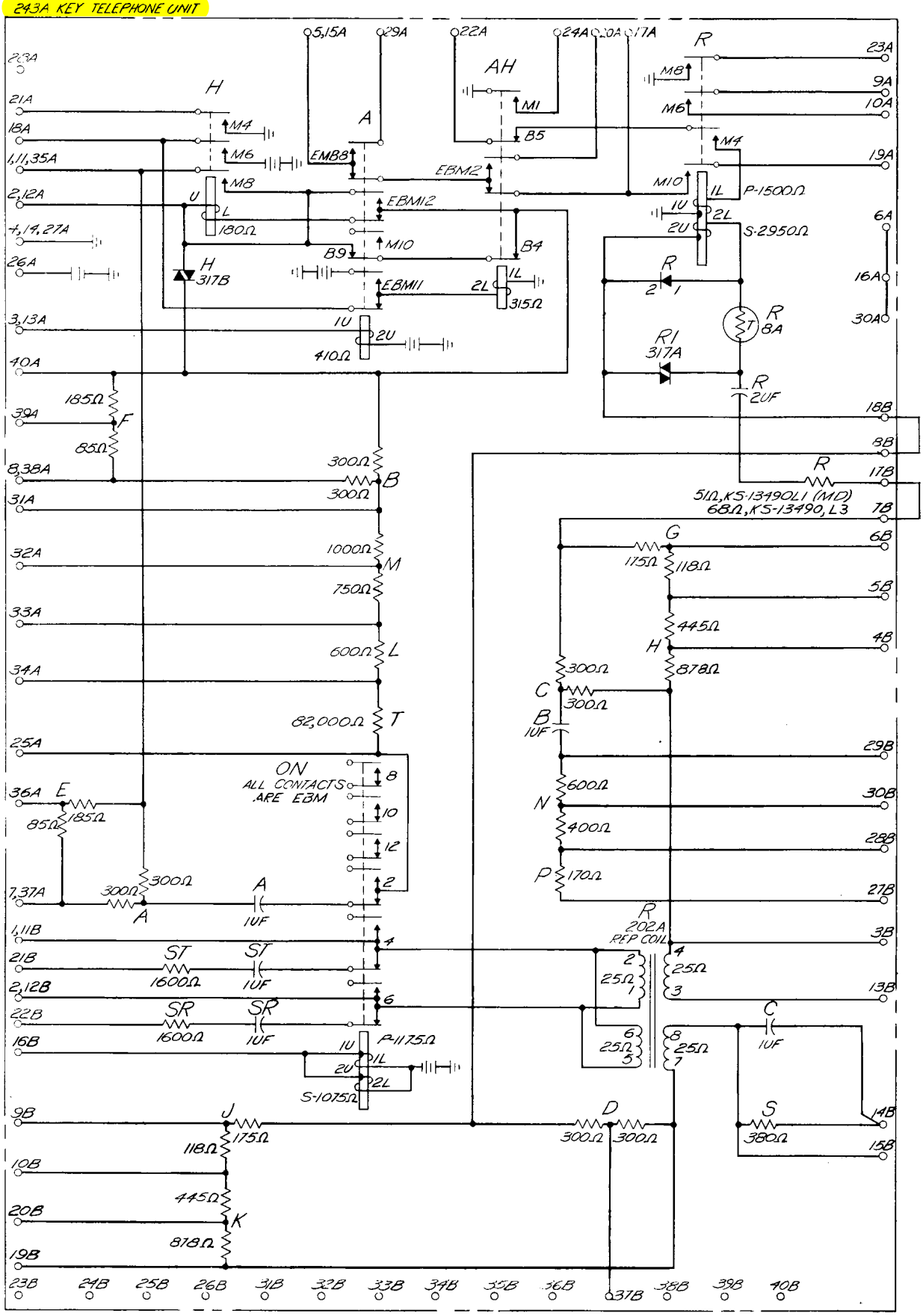

EQUIPMENT NOTES:

201. THIS KEY TEL UNIT IS DESIGNED FOR USE PRIMARILY IN 4 WIRE SUBSCRIBER LINE CIRCUITS SD-69414-01.

202. THIS KEY TEL UNIT IS 19 MODULES (8-9/32 IN.) WIDE.

24V NOMINAL
(20-26V)

DRAWING ISSUE	
12B	RJT DHC MKJ
13B	RA DHC ARB
16B	RBB RBB PEG

KEY TELEPHONE UNIT CIRCUIT
(243A KTU)

BELL TELEPHONE LABORATORIES INCORPORATED

DWG SIZE 3S

SD-69288-01-C54

PRINTED IN U.S.A.

E-7434-3 (9-59)

TCI Library- http://www.telephonecollectors.info/

FIG. 57
FUSE UNIT

201C KEY TELEPHONE UNIT

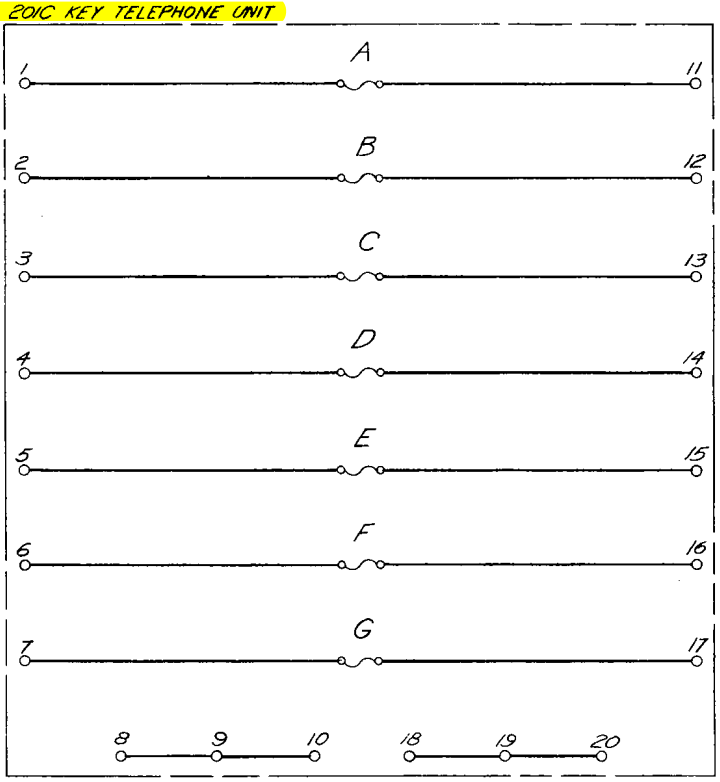

EQUIPMENT NOTES:

201. THIS KEY TEL UNIT IS DESIGNED PRIMARILY FOR USE IN KEY TEL SYSTEM NO. 1A1, SD-69203-01, J53021.

202. THIS KEY TEL UNIT IS 5 MODULES (2-5/32 IN.) WIDE.

203. FUSES ARE NOT PROVIDED WITH THE UNIT, THEY ARE SHOWN FOR REFERENCE ONLY.

DRAWING ISSUE	
12B	RJT DWG WEJ
16B	RBB RBB PEG
17D	RBB RBB WJJ

KEY TELEPHONE UNIT CIRCUIT
(201C KTU)

SD-69288-01-C55

BELL TELEPHONE LABORATORIES INCORPORATED

DWG SIZE 3S

PRINTED IN U.S.A.

E-7424-3 (9-59)

TCI Library- http://www.telephonecollectors.info/

FIG. 58
CO OR LINE CIRCUIT

249A KEY TELEPHONE UNIT

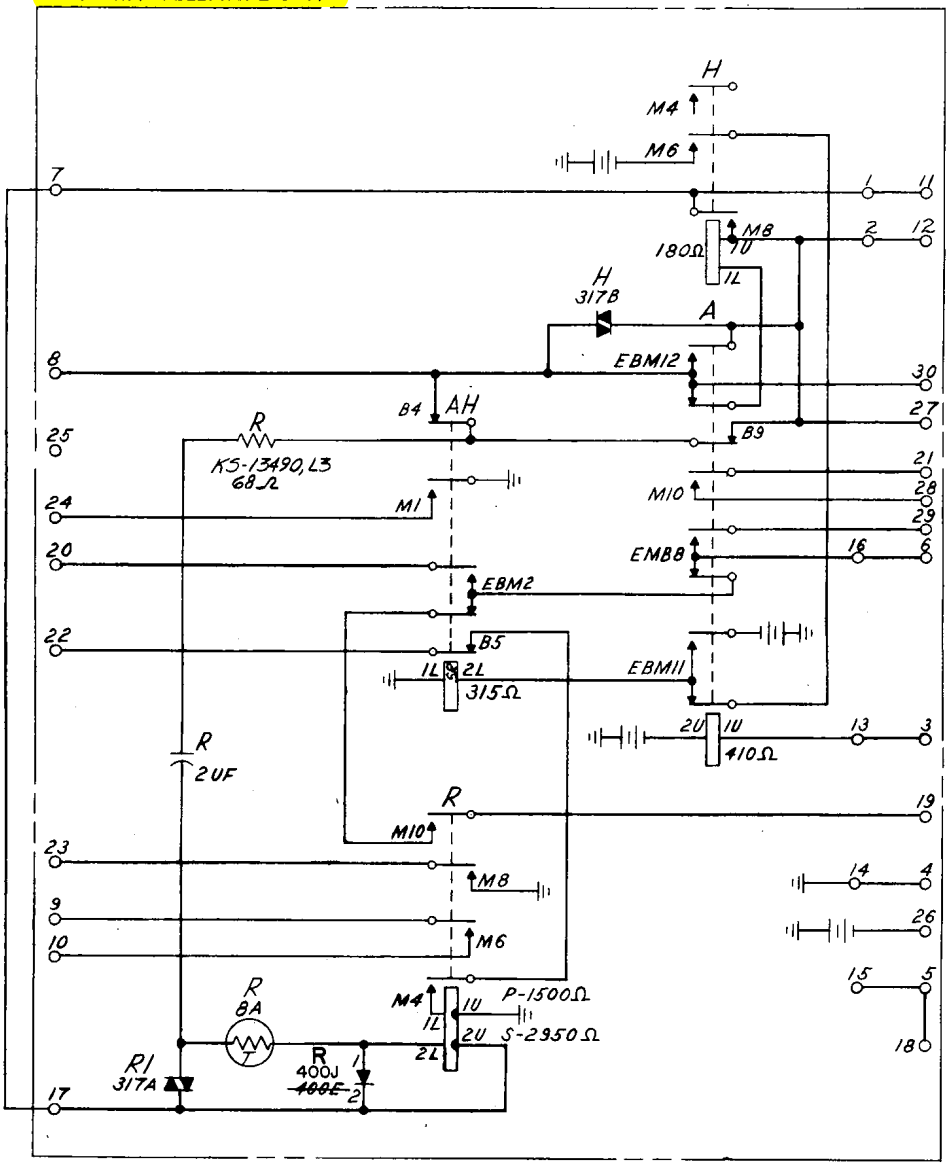

EQUIPMENT NOTES:

201. THIS KEY TEL UNIT IS DESIGNED FOR USE PRIMARILY IN SWITCHING SYSTEM NO. 400, SD-69474-01, J53035.

202. THIS KEY TEL UNIT IS 6 MODULES (2-19/32 IN.) WIDE.

20V NOMINAL
(20-26V)

DRAWING ISSUE

13B	GMB DWG APPR
16B	RBB RBB RBB

KEY TELEPHONE UNIT CIRCUIT

(249A KTU)

BELL TELEPHONE LABORATORIES INCORPORATED

DWG SIZE 3S

SD-69288-01-C56

PRINTED IN U.S.A.

E-7424-3 (2-61)

TCI Library- http://www.telephonecollectors.info/

FIG. 59
ADD-ON CIRCUIT

250A KEY TELEPHONE UNIT

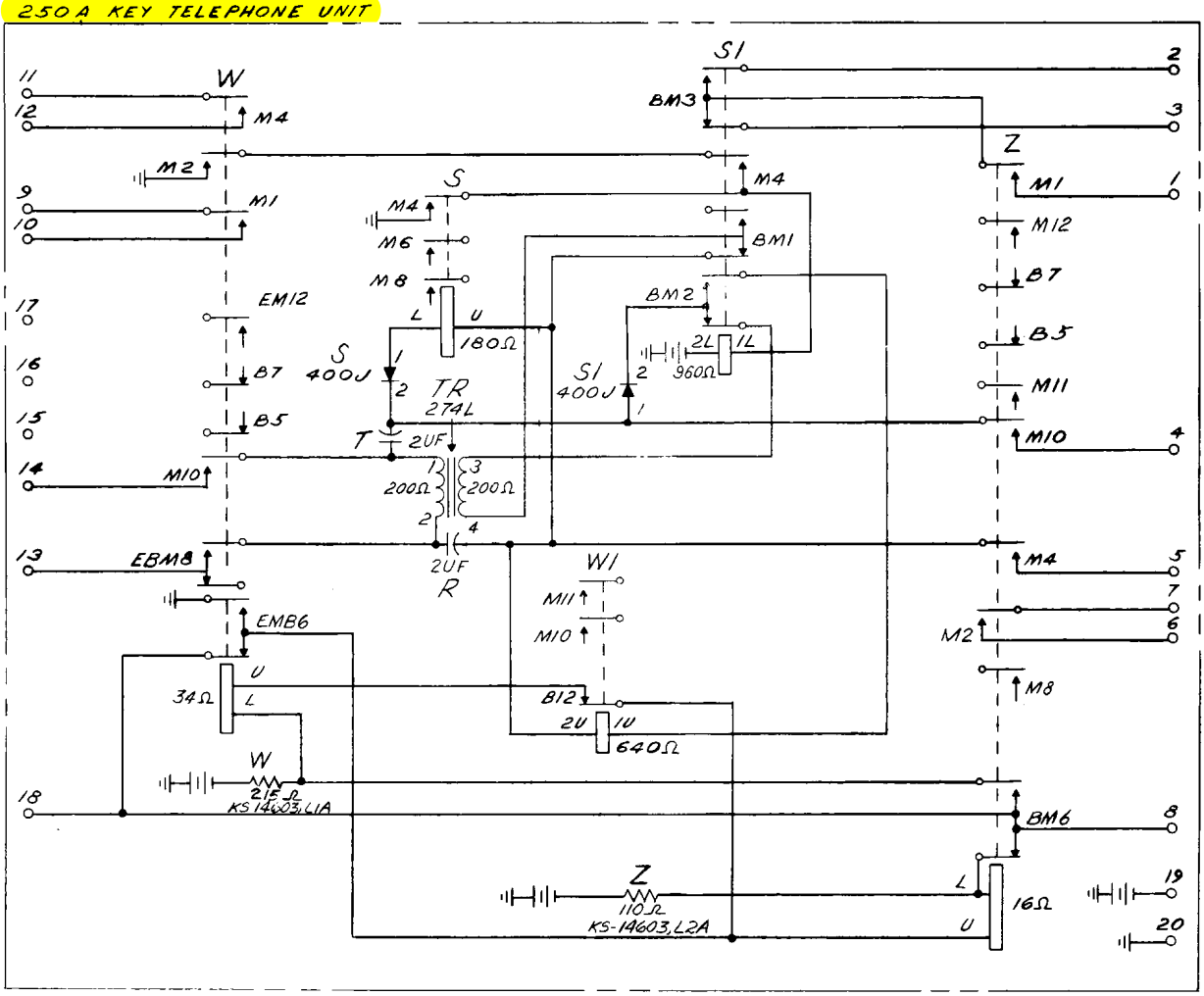

EQUIPMENT NOTES:

201. THIS KEY TEL. UNIT IS DESIGNED FOR USE PRIMARILY IN SWITCHING SYSTEM NO. 400, SD-69474-01, J53035.

202. THIS KEY TEL. UNIT IS 8 MODULES (3-15/32 IN.) WIDE.

20V NOMINAL
(14-25V)

DRAWING ISSUE	
13B	R.R. D.H.C. A.R.W.
16B	R.R.B. R.R.B. J.R.K.
17D	A.R.W. A.R.W. H.W.

KEY TELEPHONE UNIT CIRCUIT
(250A KTU)

BELL TELEPHONE LABORATORIES INCORPORATED

DWG SIZE 3S

SD-69288-01-C57

PRINTED IN U.S.A.

E-7424-3 (2-61)

TCI Library- http://www.telephonecollectors.info/

FIG. 60
LINE TRANSFER CIRCUIT

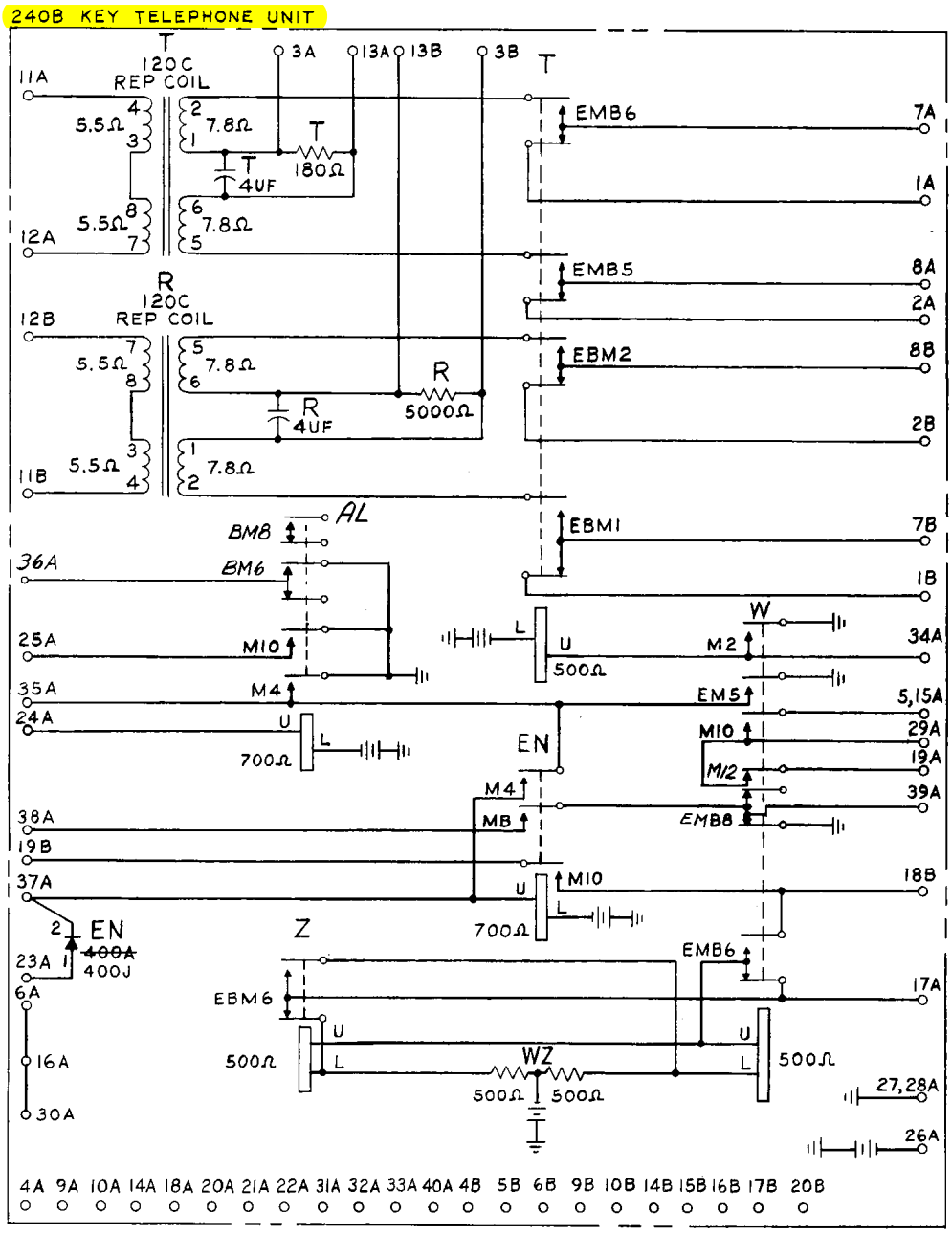

EQUIPMENT NOTES:

201. THIS KEY TEL UNIT IS DESIGNED FOR USE PRIMARILY IN KEY TEL SYSTEMS NO. 1A1, SD-69422-01.

202. THIS KEY TEL UNIT IS 16 MODULES (6-31/32 IN.) WIDE.

20V NOMINAL
(20-26V)

KEY TELEPHONE UNIT CIRCUIT
(240B KTU)

SD-69288-01-C58

BELL TELEPHONE LABORATORIES
INCORPORATED

DWG SIZE 3S

PRINTED IN U.S.A.

DRAWING ISSUE
14B
16B
17D

TCI Library- http://www.telephonecollectors.info/

FIG. 61
LINE TRANSFER CKT

244A KEY TELEPHONE UNIT

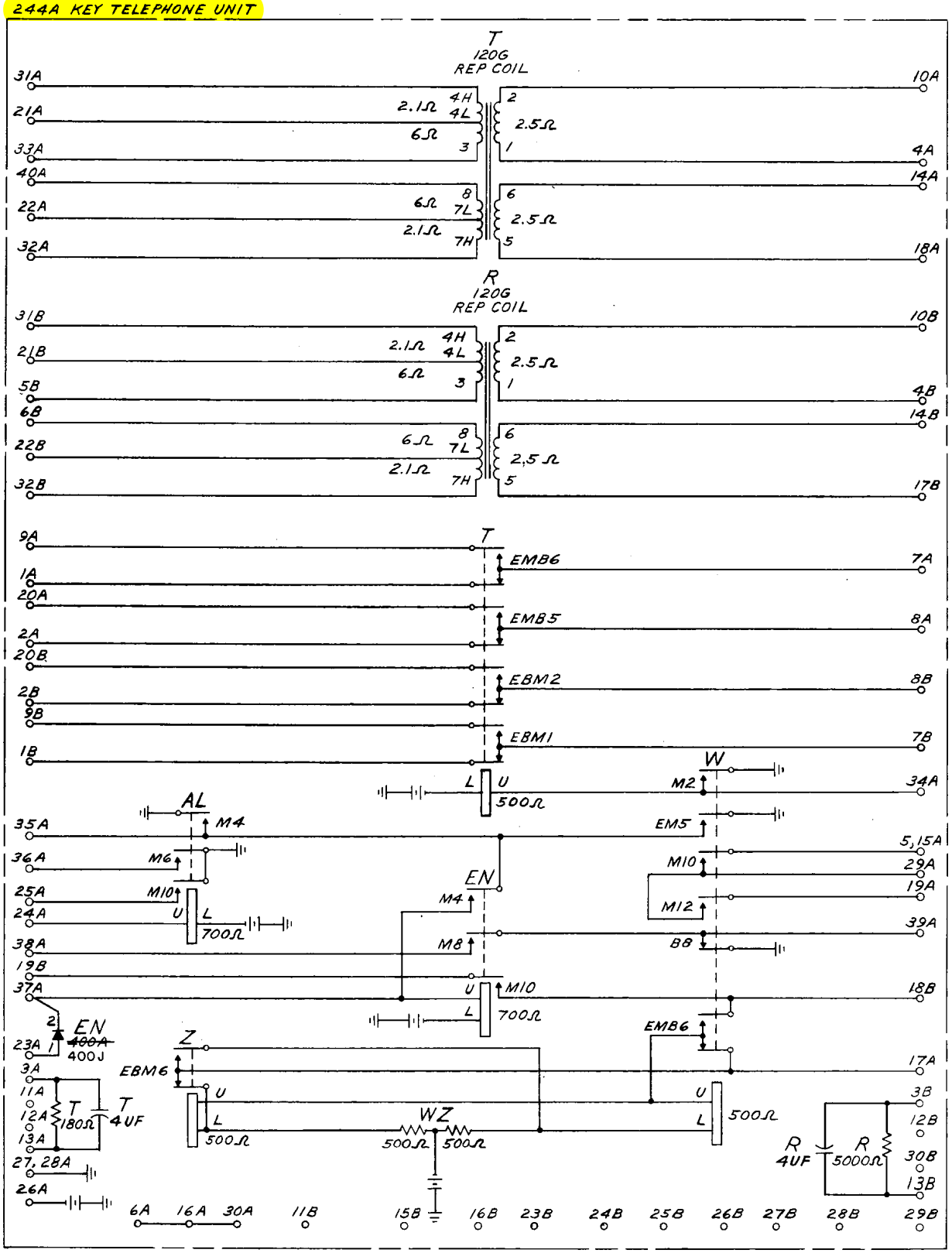

EQUIPMENT NOTES:

201. THIS KEY TEL UNIT IS DESIGNED FOR USE PRIMARILY IN KEY TEL SYSTEMS NO. 1A1, SD-69422-01.

202. THIS KEY TEL UNIT IS 16 MODULES (6-31/32 IN.) WIDE.

24V NOMINAL
(20-26V)

DRAWING ISSUE	
14B	EFS DHC ARM
16B	PBB PBB PEG

KEY TELEPHONE UNIT CIRCUIT
(244A KTU)

SD-69288-01-C59

BELL TELEPHONE LABORATORIES INCORPORATED

DWG SIZE 3S

PRINTED IN U.S.A.

E-7424-3 (2-61)

TCI Library- http://www.telephonecollectors.info/

DRAWING ISSUE	
14B	EFS DMC ARM
16B	RBB RBB PEG

FIG. 62
ATTENUATOR PAD

245A KEY TELEPHONE UNIT

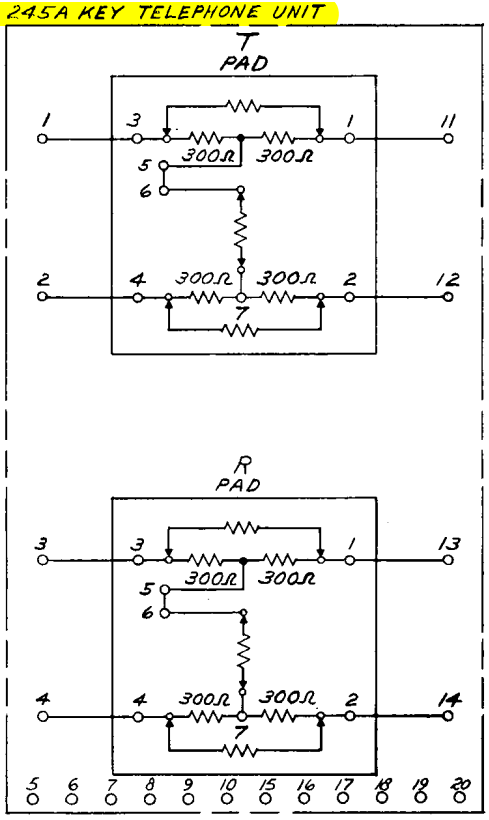

EQUIPMENT NOTES:

201. THIS KEY TEL UNIT IS DESIGNED FOR USE PRIMARILY IN KEY TEL SYSTEMS NO. 1A1, SD-69422-01.

202. THIS KEY TEL UNIT IS 5 MODULES (2-5/32 IN.) WIDE.

KEY TELEPHONE UNITS CIRCUITS
(245A KTU)

SD-69288-01-C60

BELL TELEPHONE LABORATORIES
INCORPORATED

SHEET CODE 3S

PRINTED IN U.S.A.

E-7424-3 (8-61)

TCI Library- http://www.telephonecollectors.info/

FIG. 63 (MFR DISC)
TOUCH-TONE ADAPTER RECEIVER CKT

PART OF 247A KEY TEL UNIT

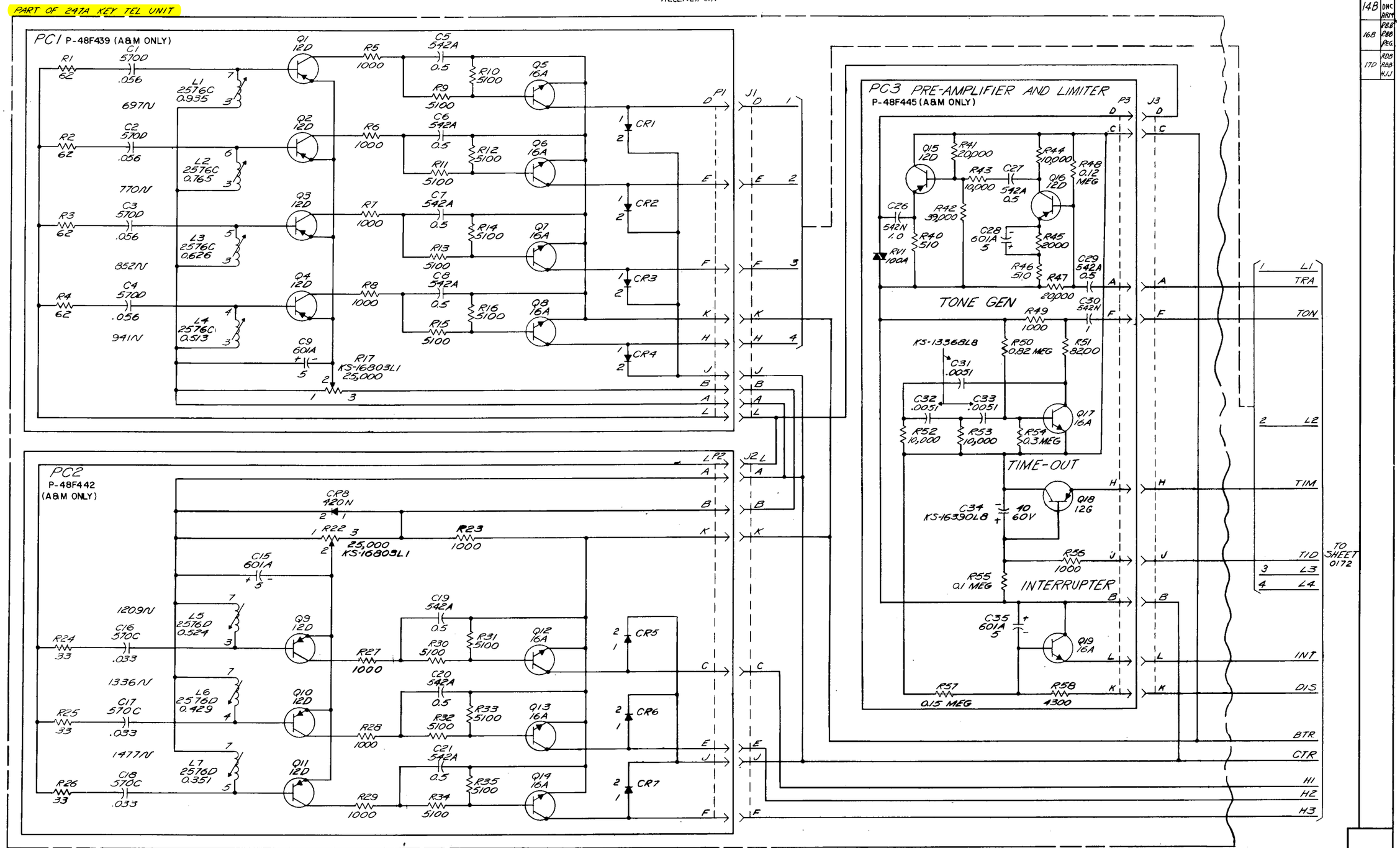

DRAWING ISSUE	
14B	PG DHC ARM
16B	PBB RBB PEG
17D	RDB RBB NJJ

KEY TELEPHONE UNITS CIRCUITS
(PART OF 247A KTU)

BELL TELEPHONE LABORATORIES INCORPORATED

DWG SIZE 6S

SD-69288-01-C61

TCI Library- http://www.telephonecollectors.info/

FIG. 64 (MFR DISC)

TOUCH-TONE ADAPTER SELECTOR CKT

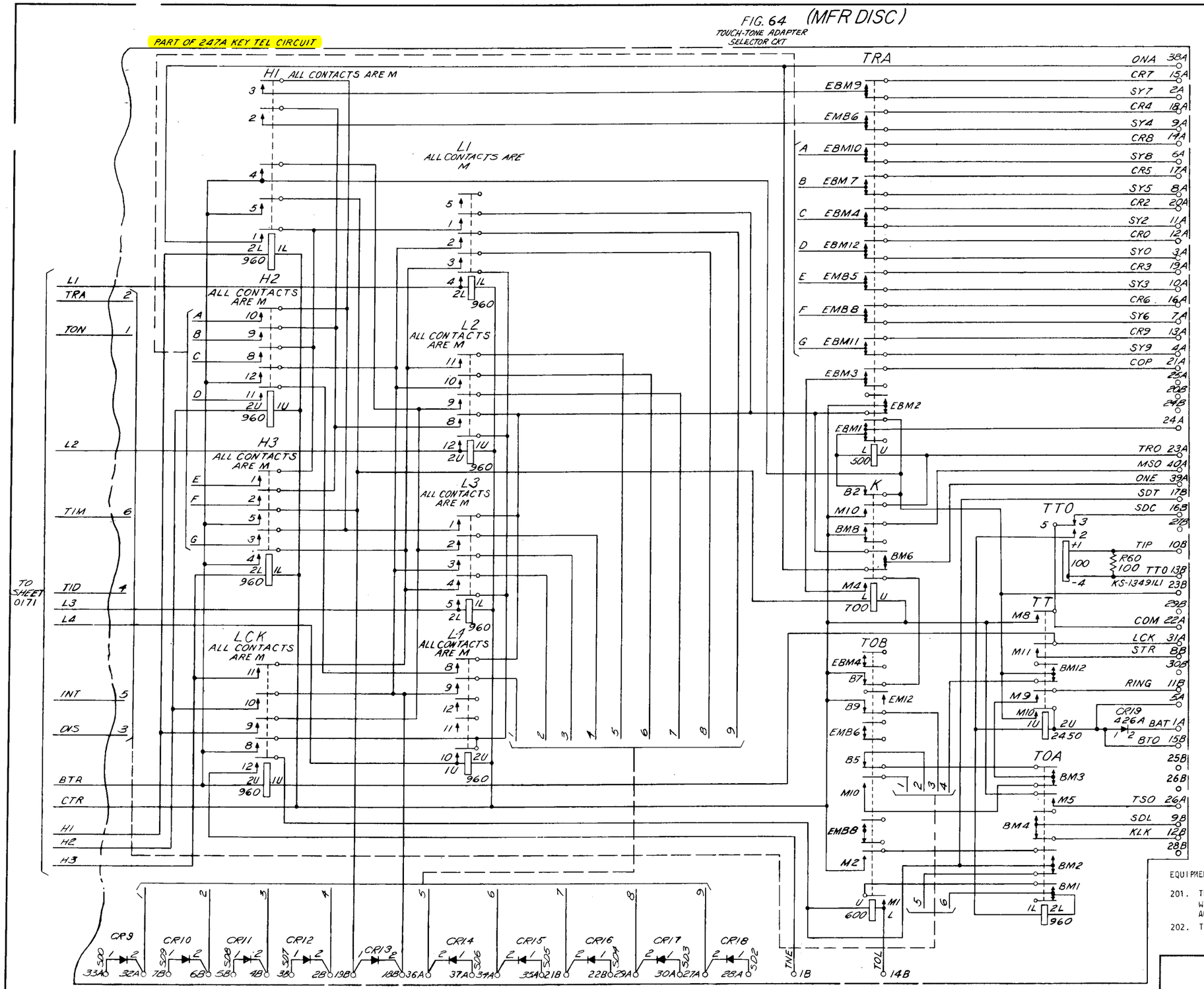

EQUIPMENT NOTES:

201. THIS KEY TEL UNIT IS DESIGNED FOR USE PRIMARILY WITH KEY TEL SYSTEM NO 6A, AND NO.2A, TOUCH-TONE ADAPTER CKT, SD-69447-01.

202. THIS KEY TEL UNIT IS 21 MODULES (9 5/32 IN.) WIDE.

DRAWING ISSUE	
14B	PG DHC ARM
16B	RBB RBB RGG
17D	RHO RHG HJJ

KEY TELEPHONE UNITS CIRCUITS
(PART OF 247A KTU)

SD-69288-01-C62

BELL TELEPHONE LABORATORIES INCORPORATED

DWG SIZE 6S

PRINTED IN U.S.A.

E-7480 (2-69)

TCI Library- http://www.telephonecollectors.info/

FIG. 65
4-WIRE PRIVATE LINE STATION CKT

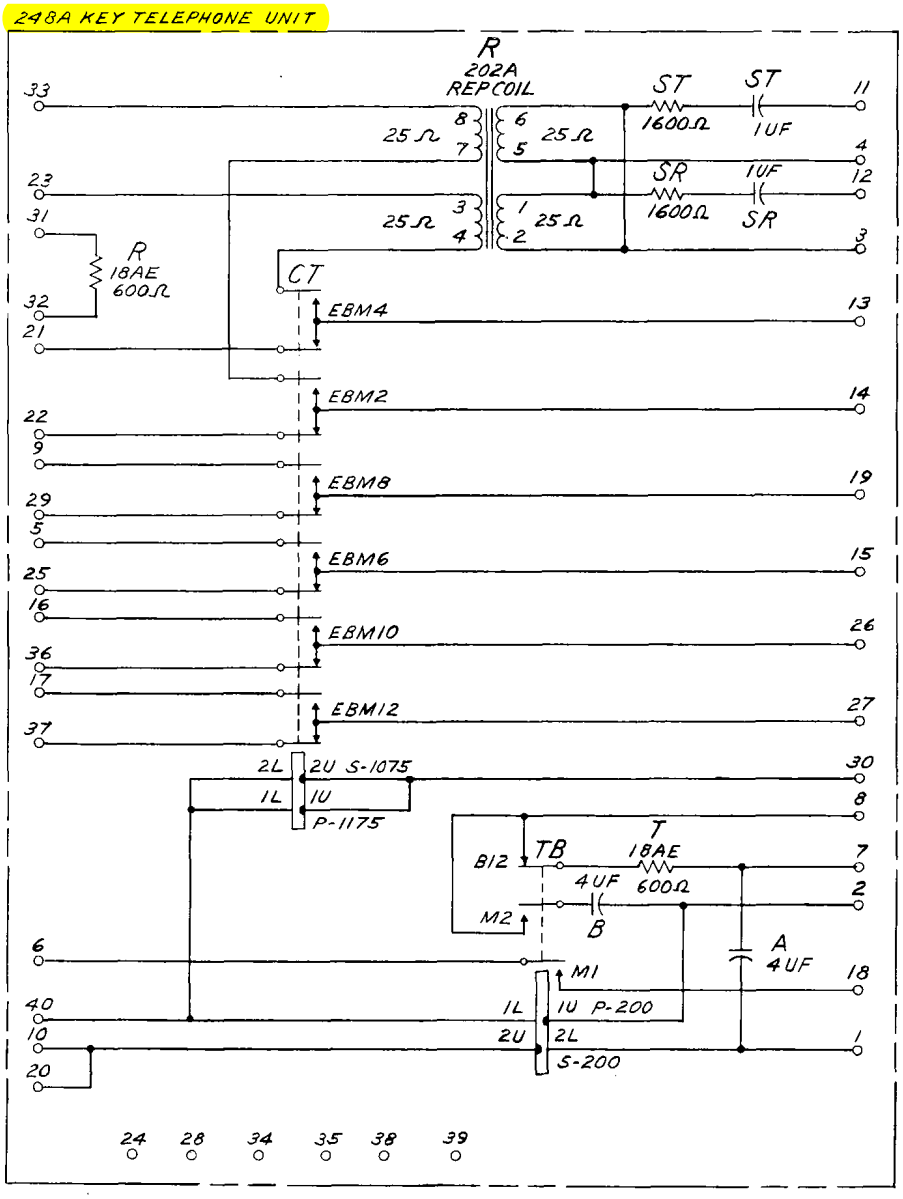

EQUIPMENT NOTES:

201. THIS KEY TEL UNIT IS DESIGNED FOR USE PRIMARILY IN 4-WIRE PRIVATE LINE CIRCUITS, SD-69449-01.

202. THIS KEY TEL UNIT IS 8 MODULES (3-15/32 IN.) WIDE.

DRAWING ISSUE	
14B	EFS DHC ARM
15B	OLD DHC ARM
16B	RBB RBB RE.G.

KEY TELEPHONE UNITS CIRCUITS
(248A KTU)

SD-69288-01-C63

BELL TELEPHONE LABORATORIES INCORPORATED

DWG SIZE 3S

PRINTED IN U.S.A.

E-7424-3 (2-81)

TCI Library- http://www.telephonecollectors.info/

FIG. 66
RINGUP RELAY CIRCUIT

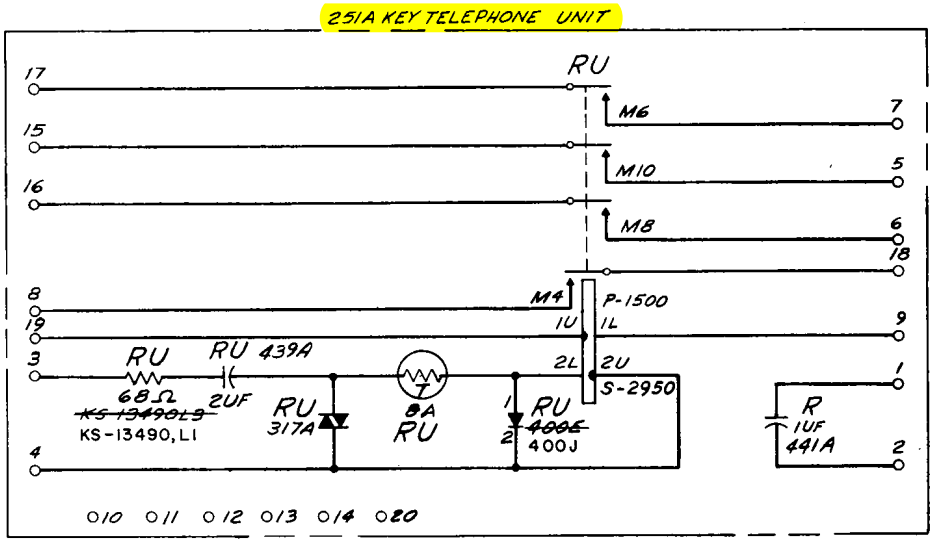

EQUIPMENT NOTES:

201. THIS KEY TEL UNIT IS DESIGNED FOR USE PRIMARILY IN SWITCHING SYSTEMS NO. 300, 301, AND 302, SD-69410-01.

202. THIS KEY TEL UNIT IS 5 MODULES (2-5/32 IN.) WIDE.

DRAWING ISSUE	
14B	R.N. DHC MDM
16B	CEB CLA RSG
17D	RSG RSG KM

KEY TELEPHONE UNITS CIRCUITS
(251A KTU)

SD-69288-01-C64

BELL TELEPHONE LABORATORIES INCORPORATED

DWG SIZE 3S

PRINTED IN U.S.A.

TCI Library- http://www.telephonecollectors.info/

DRAWING ISSUE	
14B	PG DHC ARM
16B	PBB PBB REG.

TONE CUTOFF CKT FIG. 67 (MFR. DISC.)

252A KEY TEL UNIT

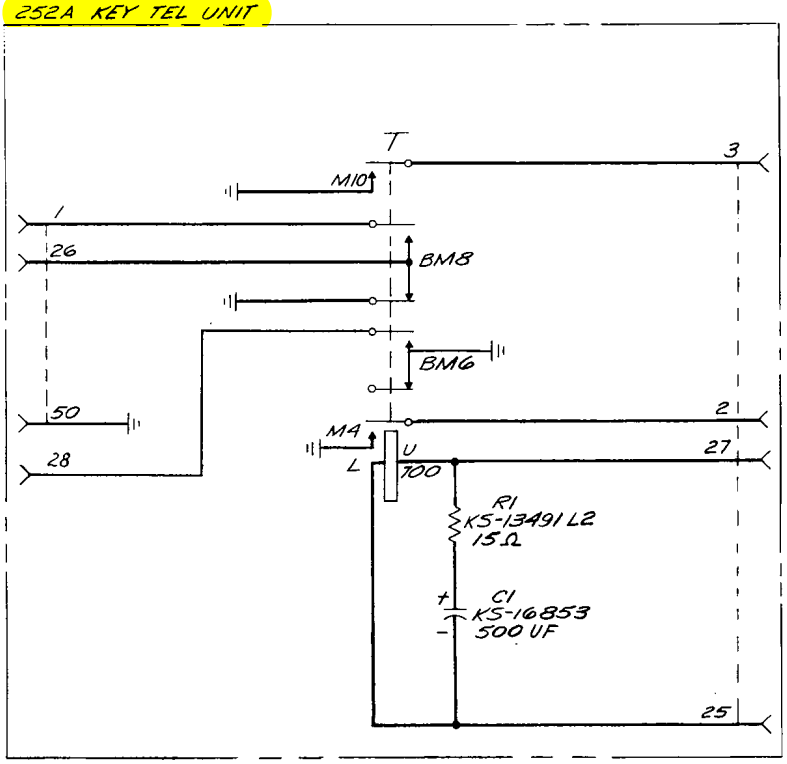

EQUIPMENT NOTES:

201. THIS KEY TEL UNIT IS DESIGNED FOR USE PRIMARILY IN INTERCOMMUNICATION SYSTEM NO. 2A, SD-69480-01.

202. THIS KEY TEL UNIT IS 5 MODULES (2-5/32 IN.) WIDE.

KEY TELEPHONE UNITS CIRCUITS
(252A KTU)

SD-69288-01-C65

BELL TELEPHONE LABORATORIES INCORPORATED

DWG SIZE 3S

PRINTED IN U.S.A.

E-7424-3 (2-61)

TCI Library- http://www.telephonecollectors.info/

FIG. 68 (MFR. DISC.)
STATION SELECTION CKT

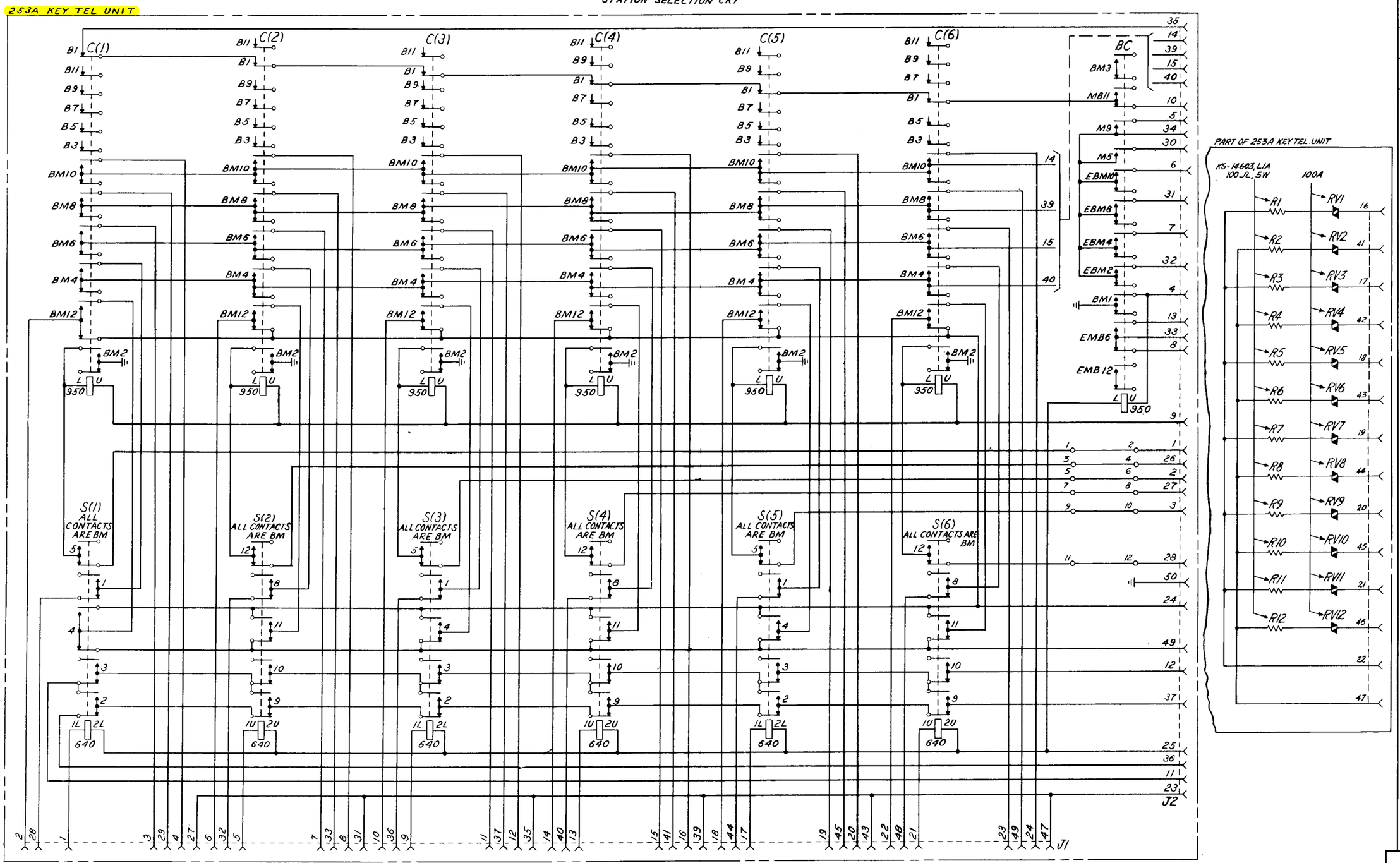

EQUIPMENT NOTES:

201. THIS KEY TEL UNIT IS DESIGNED FOR USE PRIMARILY IN INTERCOMMUNICATION SYSTEM NO. 2A, SD-69480-01.

202. THIS KEY TEL UNIT IS 16 MODULES (6-31/32 IN.) WIDE.

DRAWING ISSUE	
14B	P.G. BHC ARM
16B	RBB RBB RGG
17D	RBB JP WJ

KEY TELEPHONE UNITS CIRCUITS

(253A KTU)

BELL TELEPHONE LABORATORIES INCORPORATED

DWG SIZE 6S

PRINTED IN U.S.A.

SD-69288-01-C66

TCI Library- http://www.telephonecollectors.info/

FIG. 69 (MFR DISC)
STATION SELECTION & AMPLIFIER CIRCUIT

254A KEY TEL UNIT

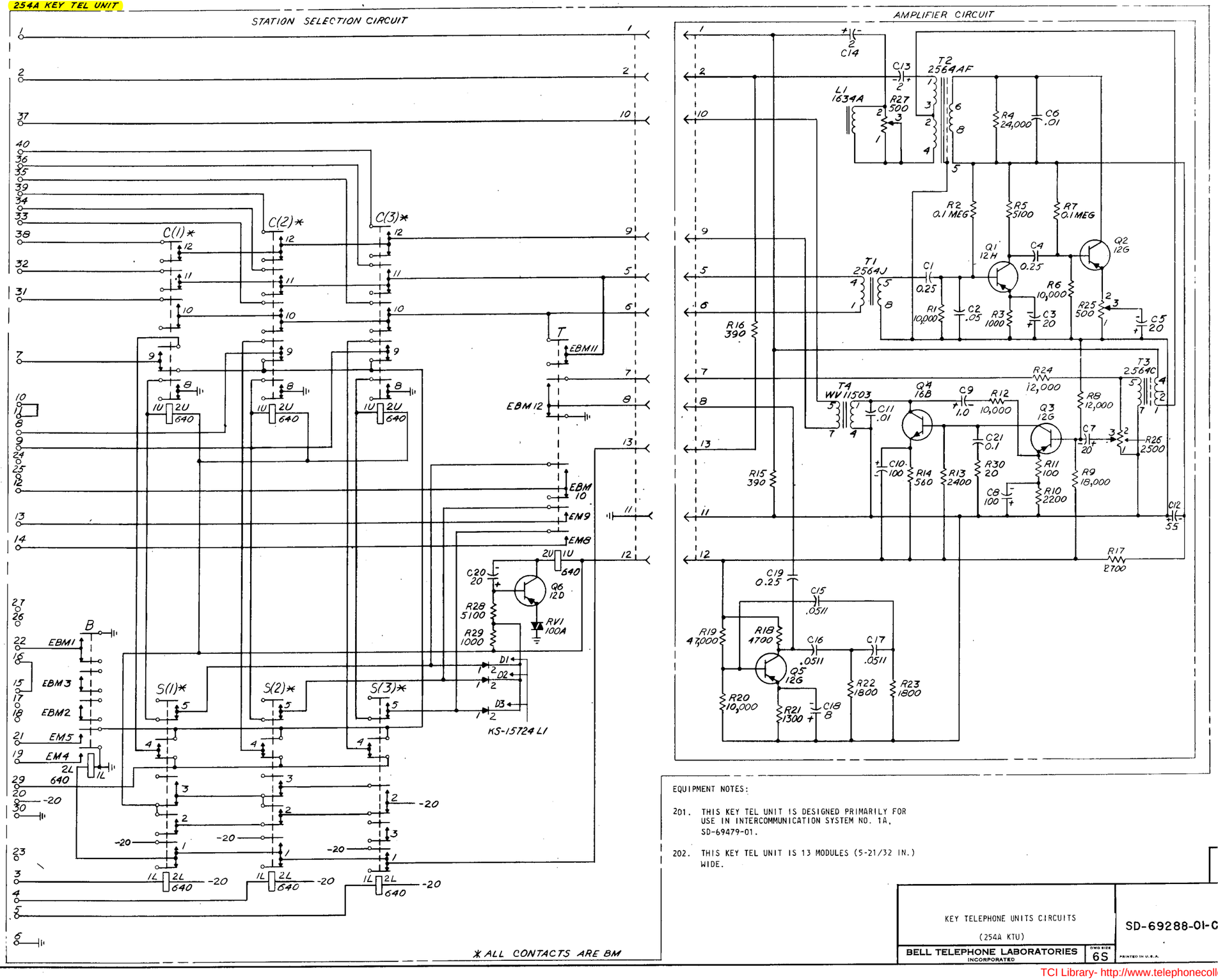

* ALL CONTACTS ARE BM

EQUIPMENT NOTES:

201. THIS KEY TEL UNIT IS DESIGNED PRIMARILY FOR USE IN INTERCOMMUNICATION SYSTEM NO. 1A, SD-69479-01.

202. THIS KEY TEL UNIT IS 13 MODULES (5-21/32 IN.) WIDE.

DRAWING ISSUE		
14B	P.G.	DMC
16B		PBB PBB PEG

KEY TELEPHONE UNITS CIRCUITS

(254A KTU)

BELL TELEPHONE LABORATORIES INCORPORATED

DWG SIZE 6S

SD-69288-01-C67

PRINTED IN U.S.A.

TCI Library- http://www.telephonecollectors.info/

FIG. 70
4 WIRE LINE CIRCUIT WITH E&M LEAD SIGNALING

255A KEY TELEPHONE UNIT

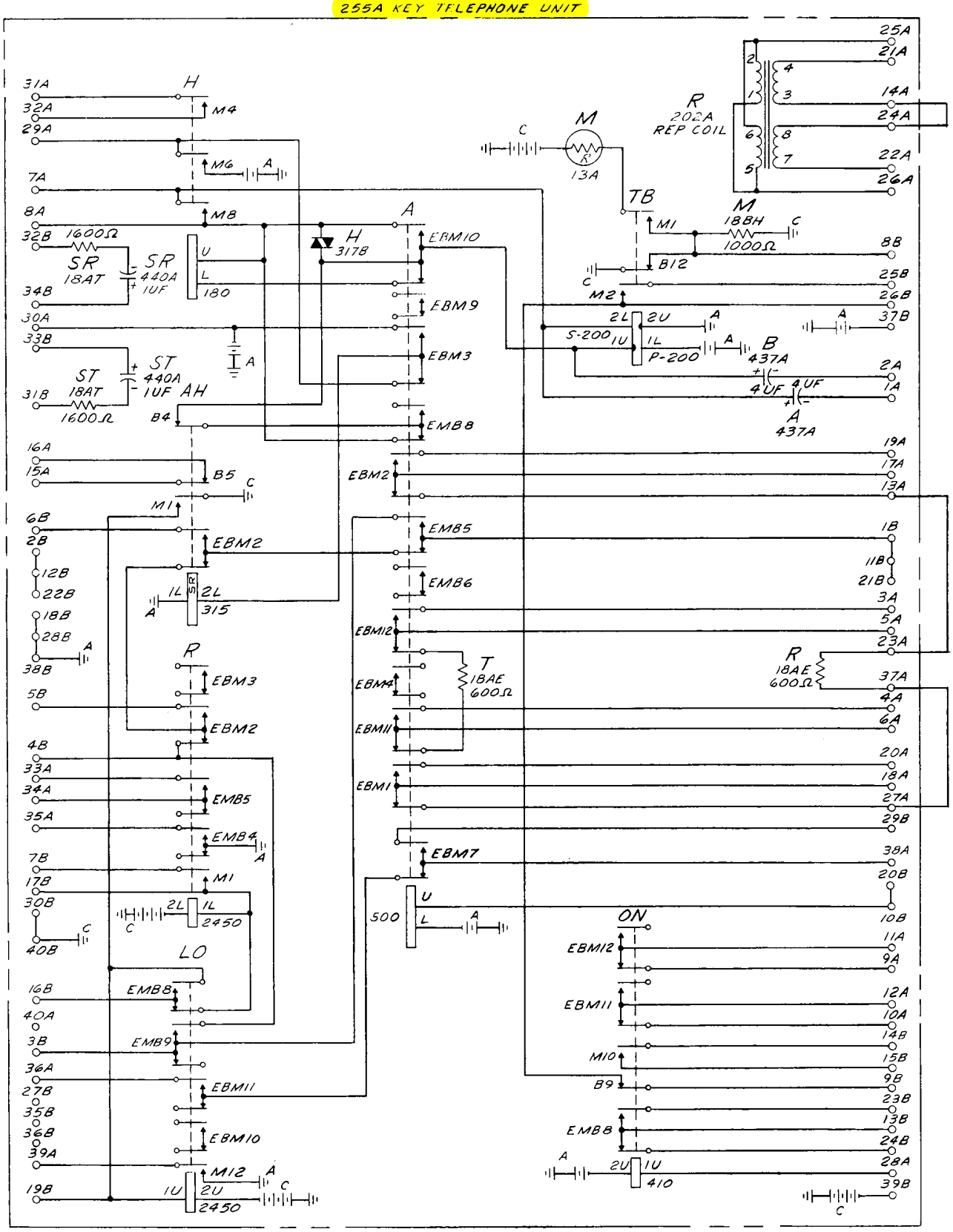

EQUIPMENT NOTES:

201. THIS KEY TEL UNIT IS DESIGNED FOR USE PRIMARILY IN NORAD SWITCHED NETWORK, SD-69488-01.

202. THIS KEY TEL UNIT IS 14 MODULES (6-3/32 IN.) WIDE.

24V NOMINAL (20-26V)

48V NOMINAL (45-50V)

DRAWING ISSUE	
14B	R.H. DHC ARM
16B	RBB RBB RBG

KEY TELEPHONE UNITS CIRCUITS

(255A KTU)

BELL TELEPHONE LABORATORIES INCORPORATED

DWG SIZE 3S

SD-69288-01-C68

PRINTED IN U.S.A.

TCI Library- http://www.telephonecollectors.info/

DRAWING ISSUE	
14B	R.H. DHC ARM
16B	R.B.B. R.B.B. R.E.G.

FIG. 71
ACTIVE SIDE-TONE NETWORK FOR 4-WIRE LINES

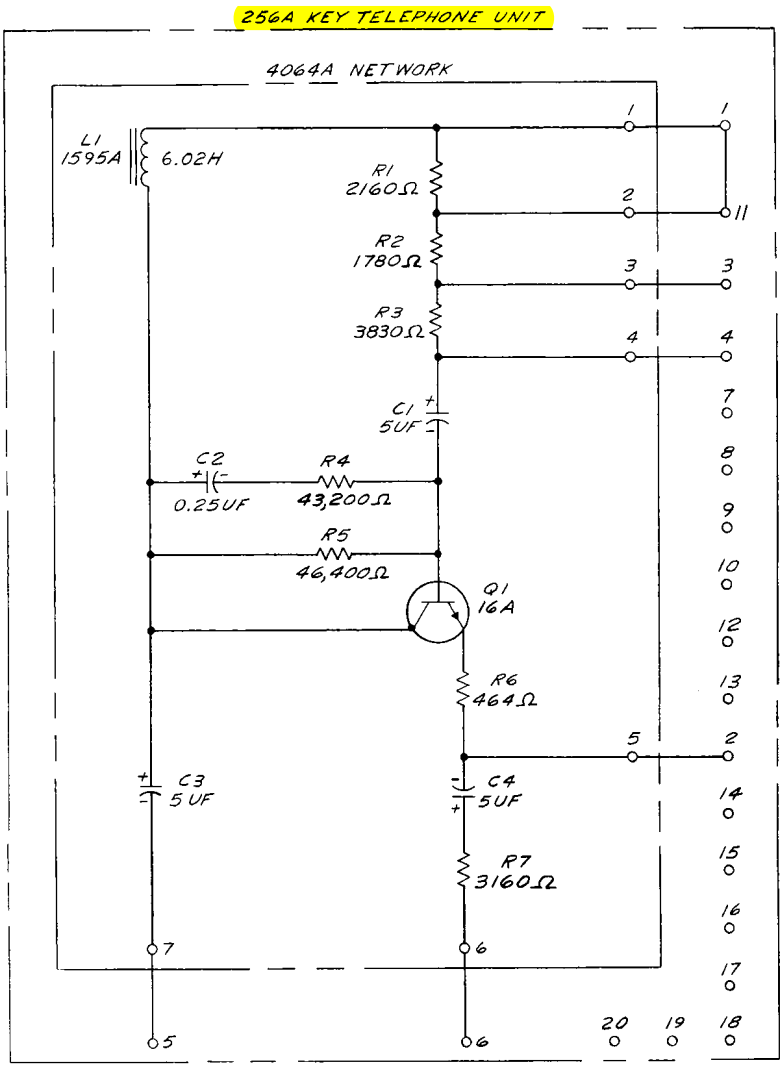

EQUIPMENT NOTES:

201. THIS KEY TEL UNIT IS DESIGNED FOR USE PRIMARILY WITH NORAD SWITCHED NETWORK, SD-69488-01.

202. THIS KEY TEL UNIT IS 5 MODULES (2-5/32 IN.) WIDE.

KEY TELEPHONE UNIT CIRCUIT
(256A KTU)

BELL TELEPHONE LABORATORIES INCORPORATED

DWG SIZE 3S

SD-69288-01-C69

PRINTED IN U.S.A.

TCI Library- http://www.telephonecollectors.info/

FIG. 72
LINE TRANSFER CIRCUIT

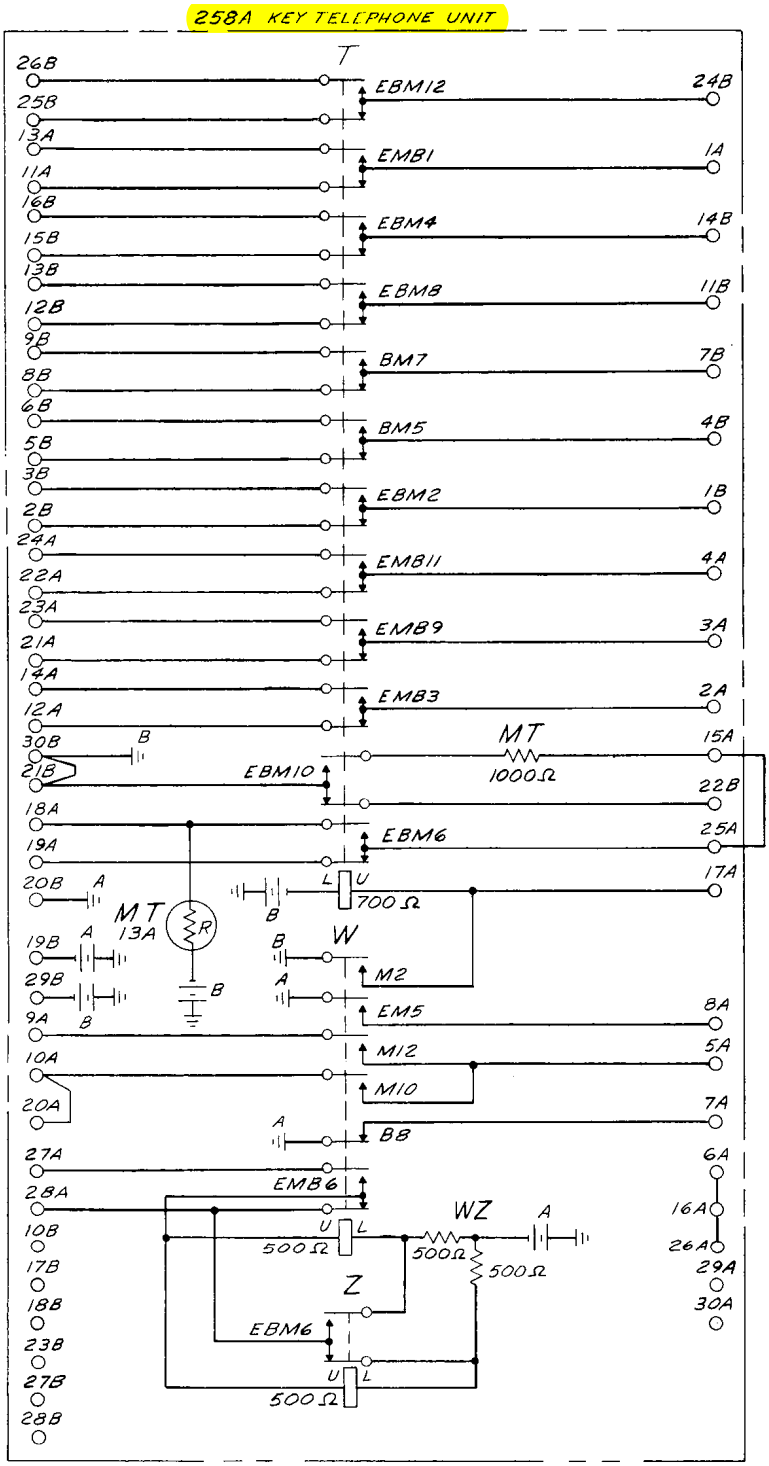

EQUIPMENT NOTES:

201. THIS KEY TEL UNIT IS DESIGNED FOR USE PRIMARILY IN 4-WIRE SUBSCRIBER LINES WITH E & M LEAD SIGNALING, SD-69491-01.

202. THIS KEY TEL UNIT IS 11 MODULES (4-25/32 IN.) WIDE.

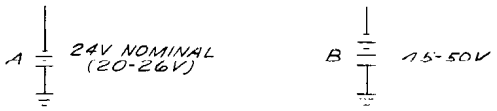

DRAWING ISSUE		
14B	A.H.	DWC ARM
15B	DLD	DWC ARM
16B	RBB	RBB REG

KEY TELEPHONE UNIT CIRCUIT
(258A KTU)

BELL TELEPHONE LABORATORIES INCORPORATED

DWG SIZE 3S

SD-69288-01-C70

PRINTED IN U.S.A.

TCI Library- http://www.telephonecollectors.info/

FIG. 73 (MFR DISC)
ADAPTER UNIT

259A KEY TELEPHONE UNIT

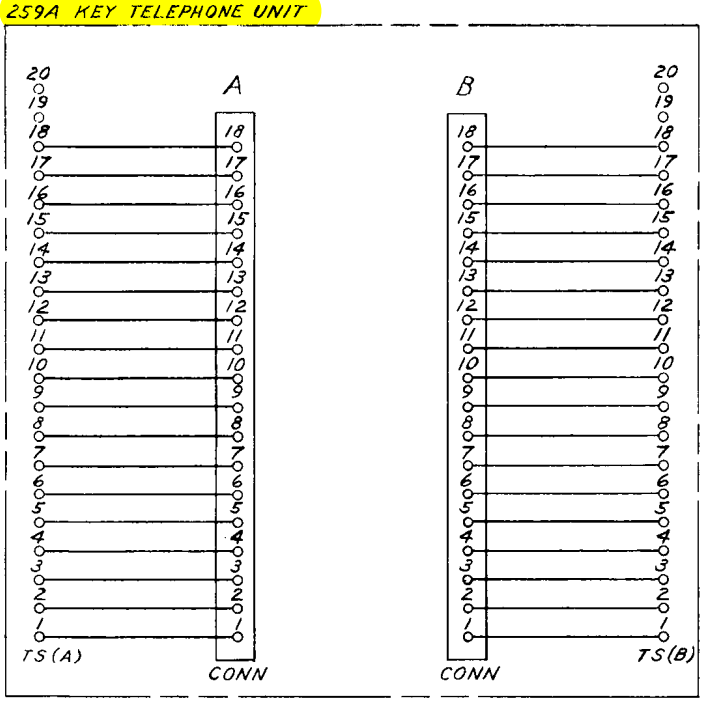

EQUIPMENT NOTES:

201. THIS KEY TEL UNIT IS DESIGNED FOR USE PRIMARILY IN KEY TEL SYSTEMS NO. 1A1 AND 1A2.

202. THIS KEY TEL UNIT IS 9 MODULES (3-29/32 IN.) WIDE.

DRAWING ISSUE	
14B	EFS DHC ARM
15B	OLD DHC ARM
16B	RBB RBB PEG

KEY TELEPHONE UNITS CIRCUITS
(259A KTU)

SD-69288-01-C71

BELL TELEPHONE LABORATORIES INCORPORATED

DWG SIZE 3S

PRINTED IN U.S.A.

E-7424-3 (3-81)

TCI Library- http://www.telephonecollectors.info/

FIG. 74
MULTI-LINE EXCLUSION CKT (MFR DISC)

DRAWING ISSUE	
15B	DLD DHC ARM
16B	RBB RBK PEG

260A KEY TELEPHONE UNIT

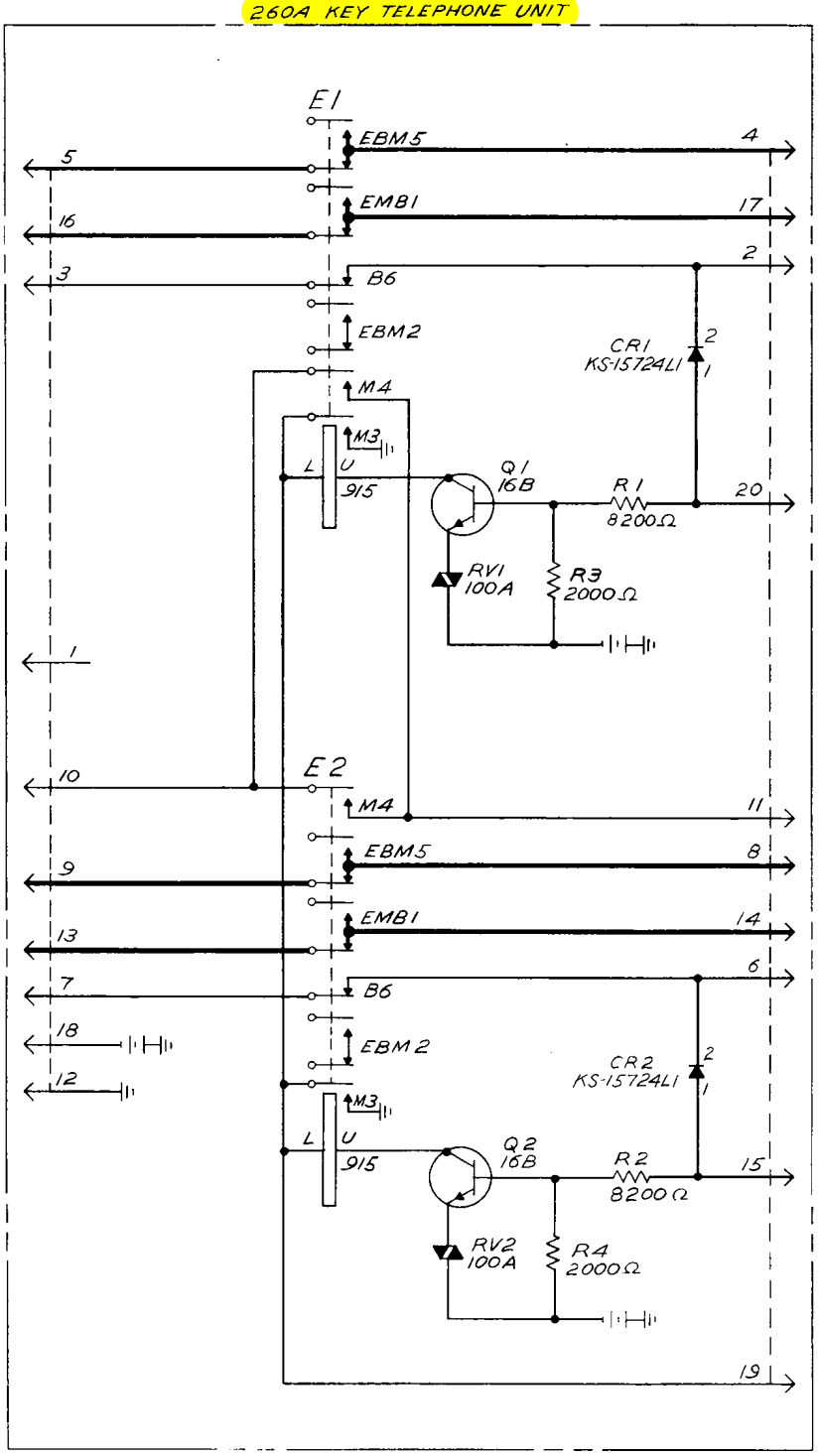

EQUIPMENT NOTES:

201. THIS KEY TEL UNIT IS DESIGNED FOR USE PRIMARILY IN KEY TEL SYSTEMS NO. 1A1 AND 1A2, SD-69489-01.

202. THIS KEY TEL. UNIT FITS INTO A 259B KTU, WHICH IS 9 MODULES (3- 29/32 IN.) WIDE.

24V NORMAL
(20-26V)

KEY TELEPHONE UNITS CIRCUITS (260A KTU)	SD-69288-01-C72
BELL TELEPHONE LABORATORIES INCORPORATED — DWG SIZE 3S	PRINTED IN U.S.A.

E-7424-3 (2-61)

TCI Library- http://www.telephonecollectors.info/

FIG. 75
TRANSFER CKT

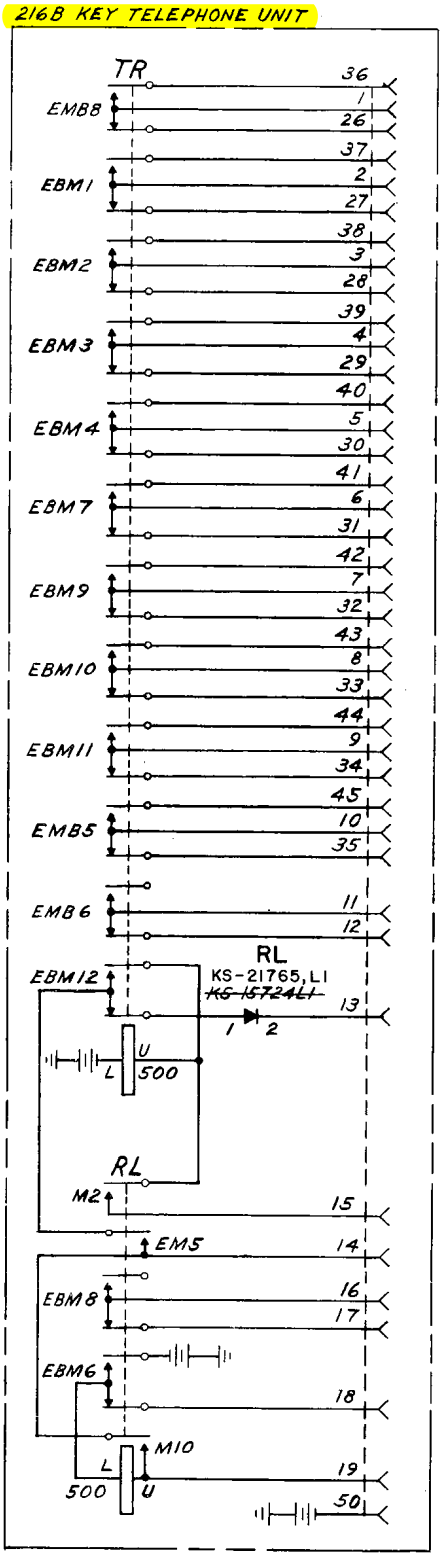

CIRCUIT NOTES:

201. THIS KEY TEL UNIT IS DESIGNED FOR USE PRIMARILY IN INTER-COMMUNICATION SYSTEM NO. 2A, SD-69480-01.

202. THIS KEY TEL UNIT IS 7 MODULES (3-1/32 IN.) WIDE.

20V NOMINAL
(14-26V)

DRAWING ISSUE	
14B	EFS DHK AAM
V6B	PBL PBL PEG

KEY TELEPHONE UNITS CIRCUITS
(216B KTU)

SD-69288-01-C73

BELL TELEPHONE LABORATORIES INCORPORATED

DWG SIZE 3S

PRINTED IN U.S.A.

6-7434-3 (8-61)

TCI Library- http://www.telephonecollectors.info/

DRAWING ISSUE	
14B	EFS DHC ARM
16B	RBE RBE RBE

FIG. 76
BRIDGING CKT

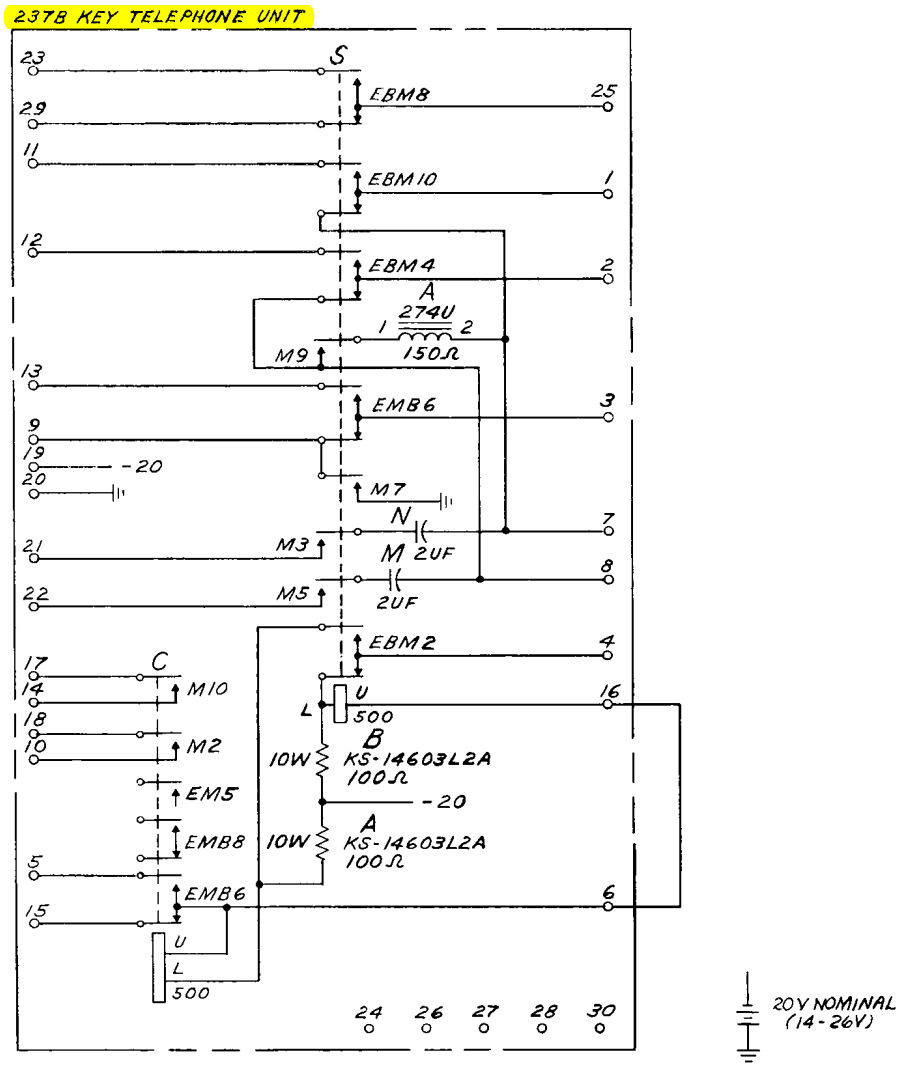

EQUIPMENT NOTES:

2.01 THIS KEY TEL UNIT IS DESIGNED FOR USE PRIMARILY IN KEY TEL SYSTEM NO. 1A1 PER SD-69412-01

2.02 THIS KEY TEL UNIT IS 6 MODULES (2 17/32 in.) WIDE.

KEY TELEPHONE UNITS CIRCUITS (237B KTU)	SD-69288-01-C74
BELL TELEPHONE LABORATORIES INCORPORATED — DWG SIZE 3S — PRINTED IN U.S.A.	

TCI Library- http://www.telephonecollectors.info/

DRAWING ISSUE	
15B	DLD DHC ARM
16B	RBB RBB PEG.

FIG. 77
ADAPTER UNIT

259B KEY TELEPHONE UNIT

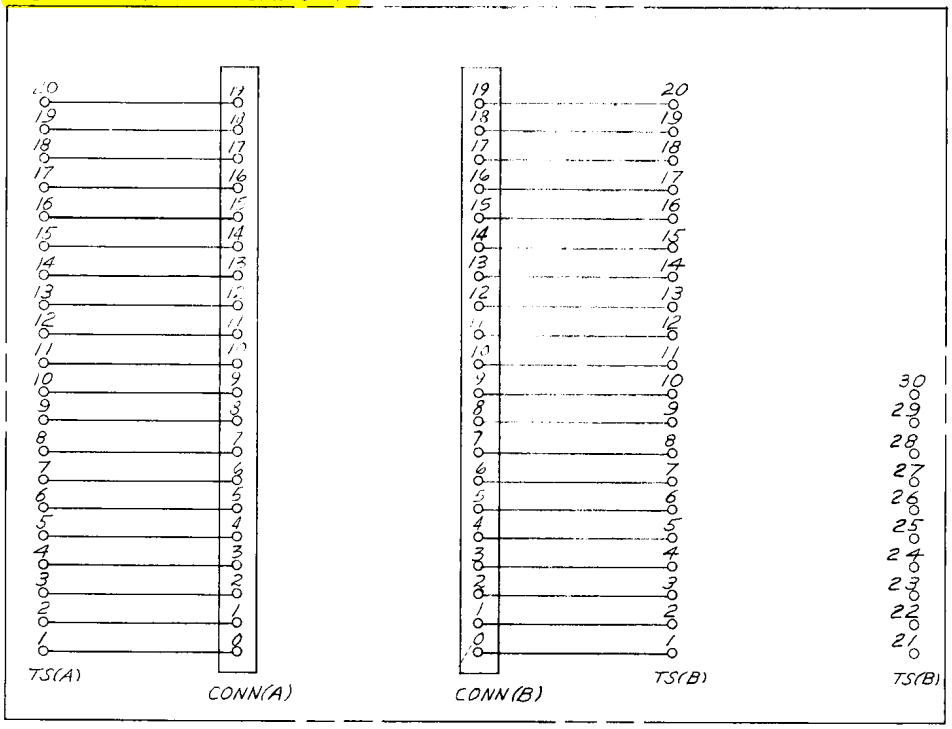

EQUIPMENT NOTES:

201. THIS KEY TEL UNIT IS DESIGNED FOR USE PRIMARILY IN KEY TEL SYSTEMS NO. 1A1 AND 1A2 PER SD-69489-01

202. THIS KEY TEL UNIT IS 9 MODULES (3-29/32 IN.) WIDE.

KEY TELEPHONE UNITS CIRCUITS
(259B KTU)

SD-69288-01-C75

BELL TELEPHONE LABORATORIES INCORPORATED

DWG SIZE 3S

PRINTED IN U.S.A.

E-7424-3 (2-81)

TCI Library- http://www.telephonecollectors.info/

FIG. 78
BUSY SIGNAL AND CAMP-ON CONTROL CIRCUIT

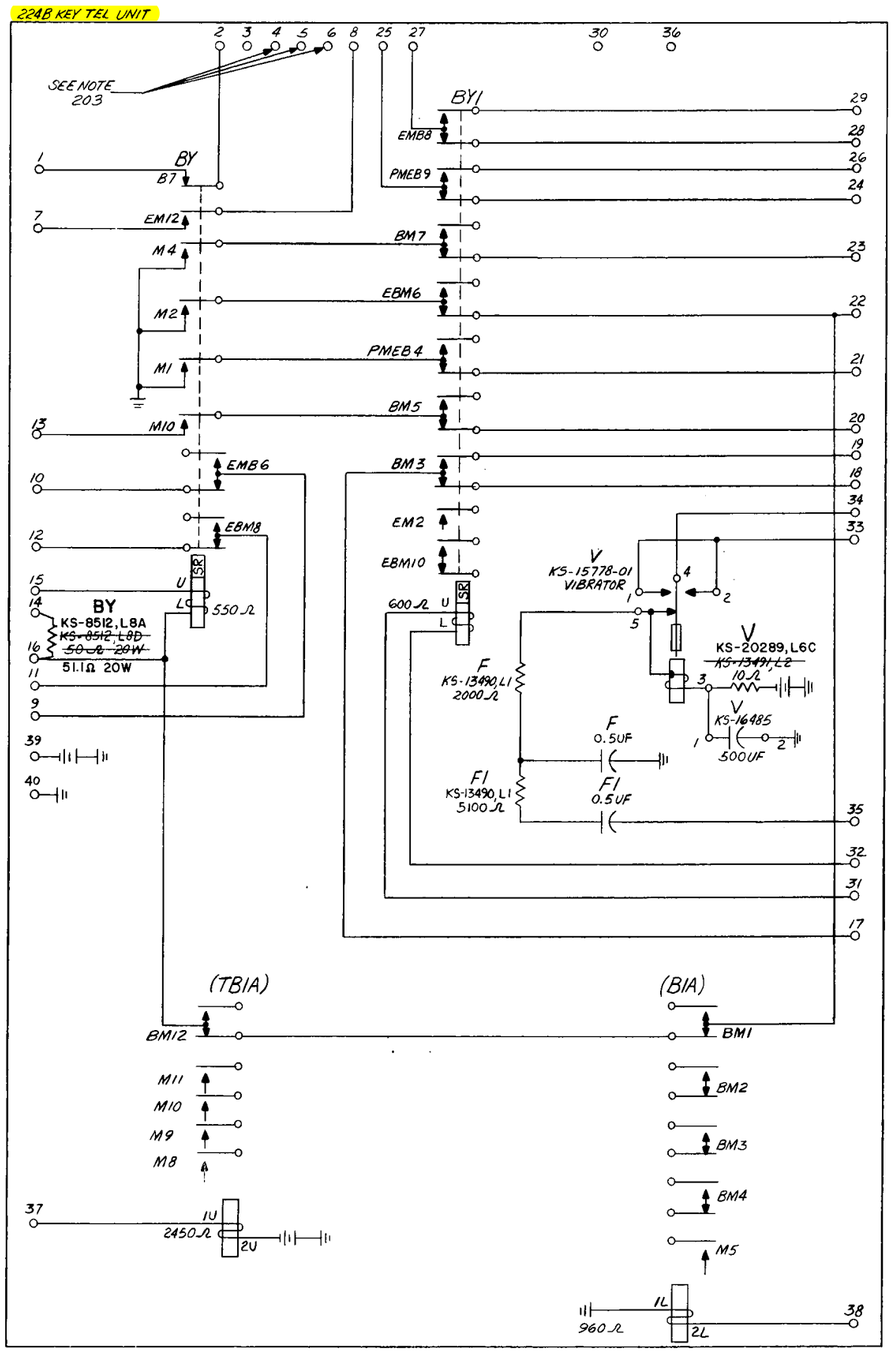

EQUIPMENT NOTES:

201. THIS KEY TEL UNIT IS DESIGNED FOR USE PRIMARILY IN KEY TEL SYSTEM NO. 6A SD-69286-01, J53023.

202. THIS KEY TEL UNIT IS 8 MODULES (3-15/32 IN.) WIDE.

203. TERMINALS 4,5 AND 6 NOT AVAILABLE FOR FUTURE USE DUE TO INTERFERENCE FROM (BY) RESISTOR.

24V NOMINAL (20-26V)

FIG. 79
PRESET CONFERENCE CIRCUIT AND CONFERENCE TIME-OUT CIRCUIT

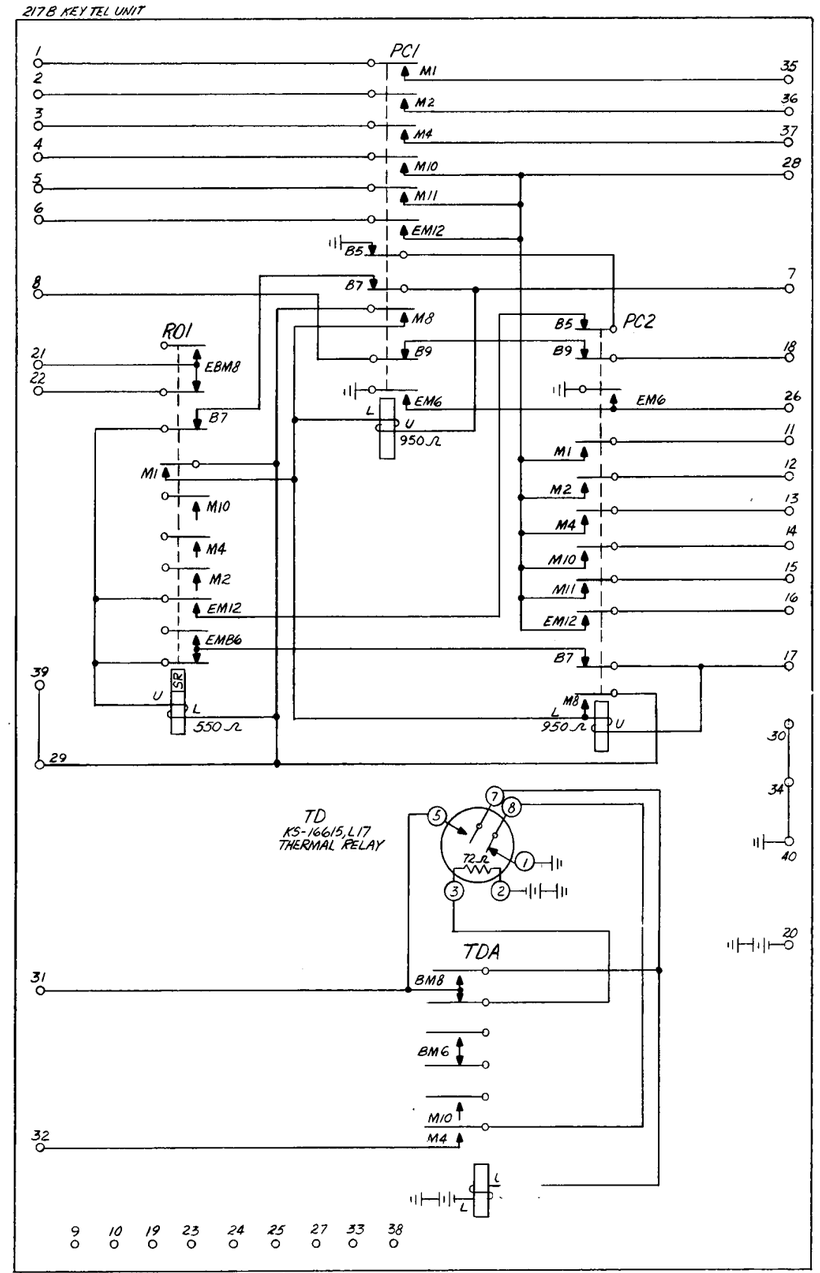

EQUIPMENT NOTES:

201. THIS KEY TEL UNIT IS DESIGNED FOR USE PRIMARILY IN KEY TEL. SYSTEM NO. 6A, SD-69286-01, J53023.

202. THIS KEY TEL UNIT IS 8 MODULES (3 15/32 IN.) WIDE.

24V NOMINAL (20-26V)

DRAWING ISSUE		
16B	RBB RBM RCG	
17D	RMS RMS HHJ	

KEY TELEPHONE UNITS CIRCUITS (217B & 224B)

SD-69288-01-C76

BELL TELEPHONE LABORATORIES INCORPORATED

DWG SIZE 6S

PRINTED IN U.S.A.

TCI Library- http://www.telephonecollectors.info/

FIG. 80
TRANSFER CIRCUIT

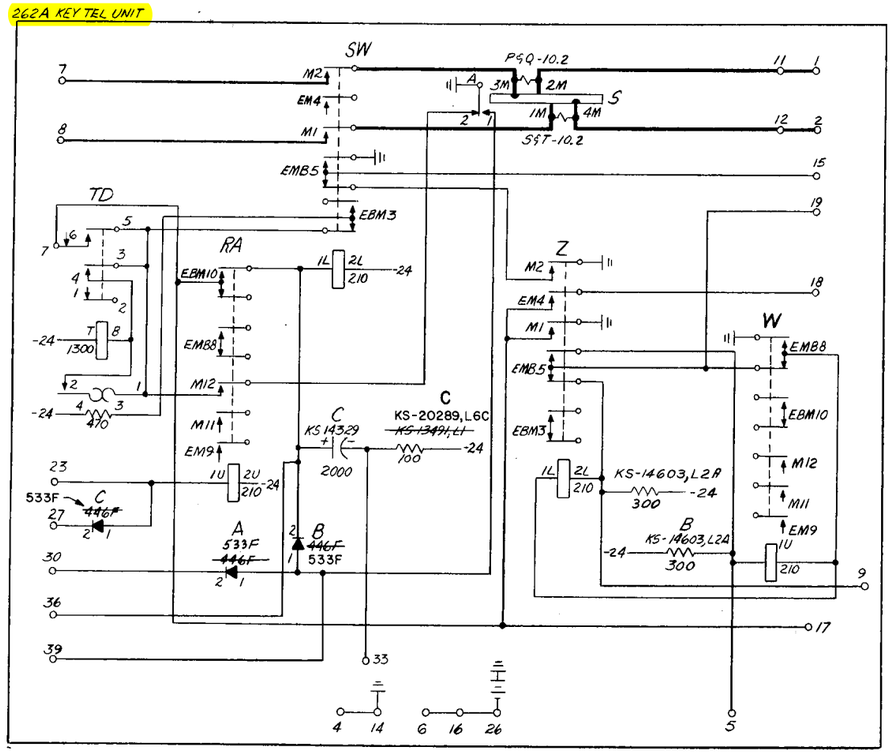

EQUIPMENT NOTES:

201. THIS KEY TEL UNIT IS DESIGNED FOR USE PRIMARILY IN KEY TEL SYSTEM NO. 1A OR 1A1, SD-69528-01.

202. THIS KEY TEL UNIT IS 8 MODULES (3-15/32 IN.) WIDE.

FIG. 81 (MFR. DISC.)
4 WIRE LINE CIRCUIT
(ROTARY DIAL SETS)

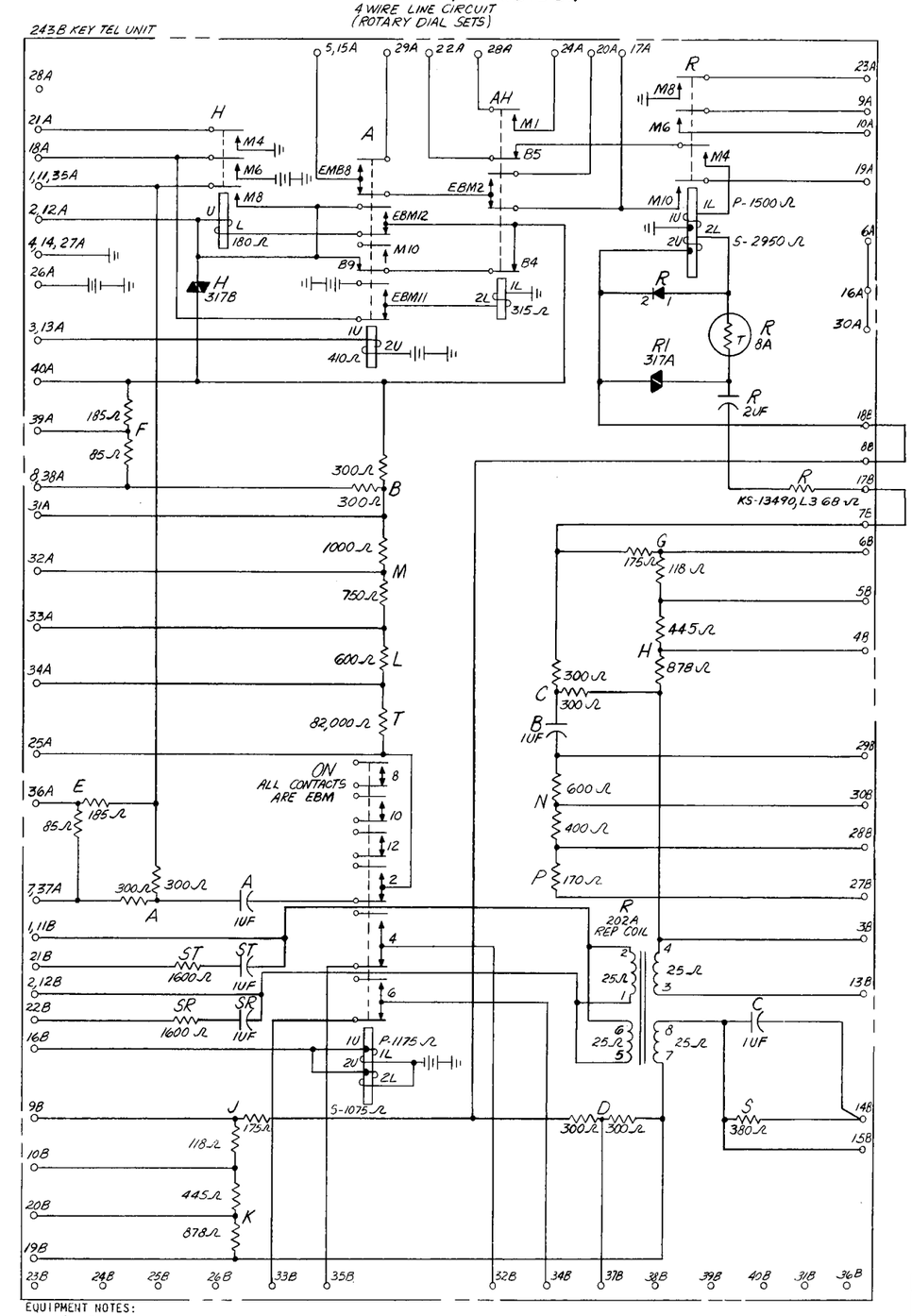

EQUIPMENT NOTES:

201. THIS KEY TEL UNIT IS DESIGNED FOR USE PRIMARILY IN 4-WIRE SUBSCRIBER LINE CIRCUITS SD-69414-01

202. THIS KEY TEL UNIT IS 19 MODULES (8-9/32 IN.) WIDE.

DRAWING ISSUE	
16B	RBB RBB PEG

KEY TELEPHONE UNIT CIRCUIT
(243B, 262A)

SD-69288-01-C77

BELL TELEPHONE LABORATORIES INCORPORATED

DWG SIZE 6S

PRINTED IN U.S.A.

K-7420 (8-63)

TCI Library- http://www.telephonecollectors.info/

FIG. 82
4-WIRE PRIVATE LINE STATION CKT

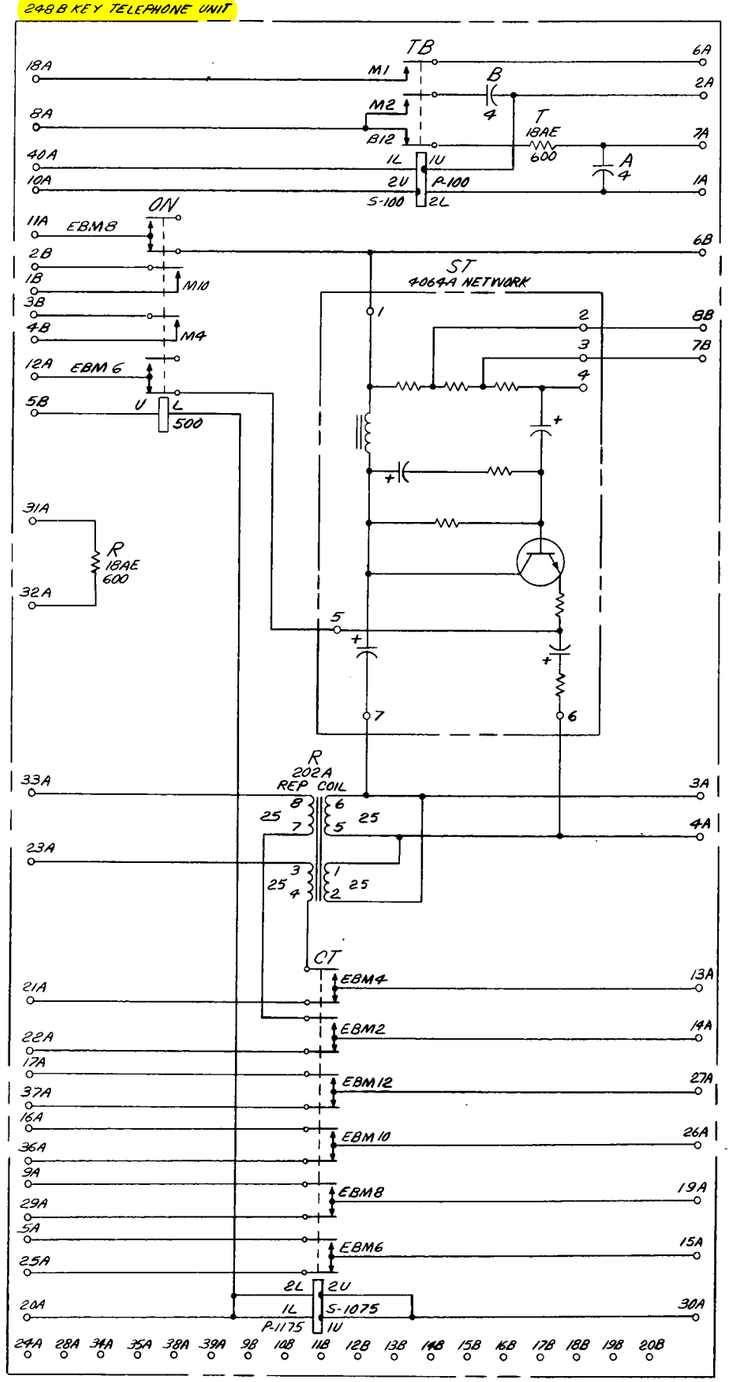

EQUIPMENT NOTES:

201. THIS KEY TEL UNIT IS DESIGNED FOR USE PRIMARILY IN 4-WIRE PRIVATE LINE CIRCUITS, SD-69449-01.

202. THIS KEY UNIT IS 11 MODULES (4 25/32)WIDE.

FIG. 83
TONE CUTOFF & LINE CURRENT LIMITING CIRCUITS

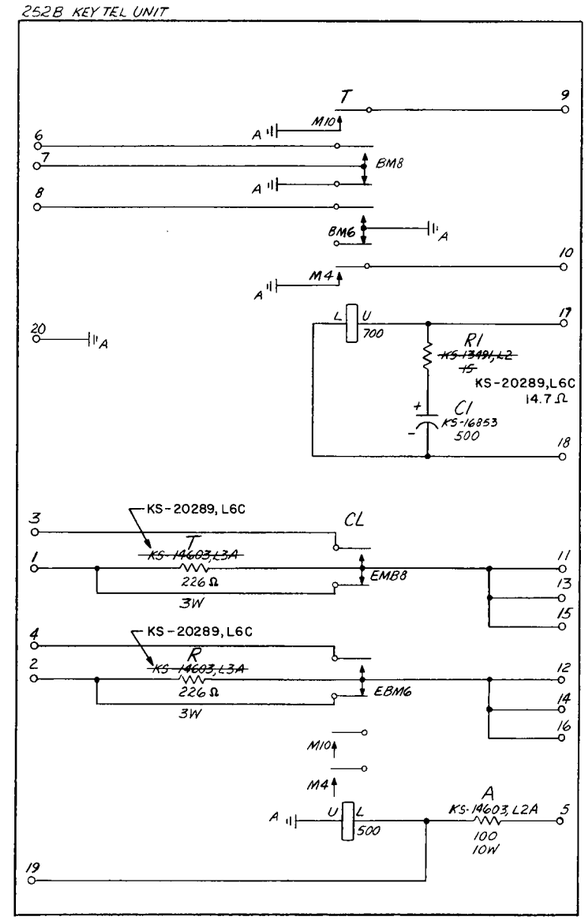

EQUIPMENT NOTES:

201. THIS KEY TEL UNIT IS DESIGNED FOR USE PRIMARILY IN INTERCOMMUNICATION SYSTEM NO. 2A, SD-69480-01.

202. THIS KEY TEL UNIT IS 5 MODULES (2-5/32 IN.) WIDE.

DRAWING ISSUE	
16B	TMJ RBB PEG

KEY TELEPHONE UNIT CIRCUIT
(248B, 252B)

SD-69288-01-C78

BELL TELEPHONE LABORATORIES INCORPORATED | DWG SIZE 6S | PRINTED IN U.S.A.

E-7430 (6-63)

TCI Library- http://www.telephonecollectors.info/

PART OF 253B KEY TEL UNIT

FIG. 84
STATION SELECTOR CKT

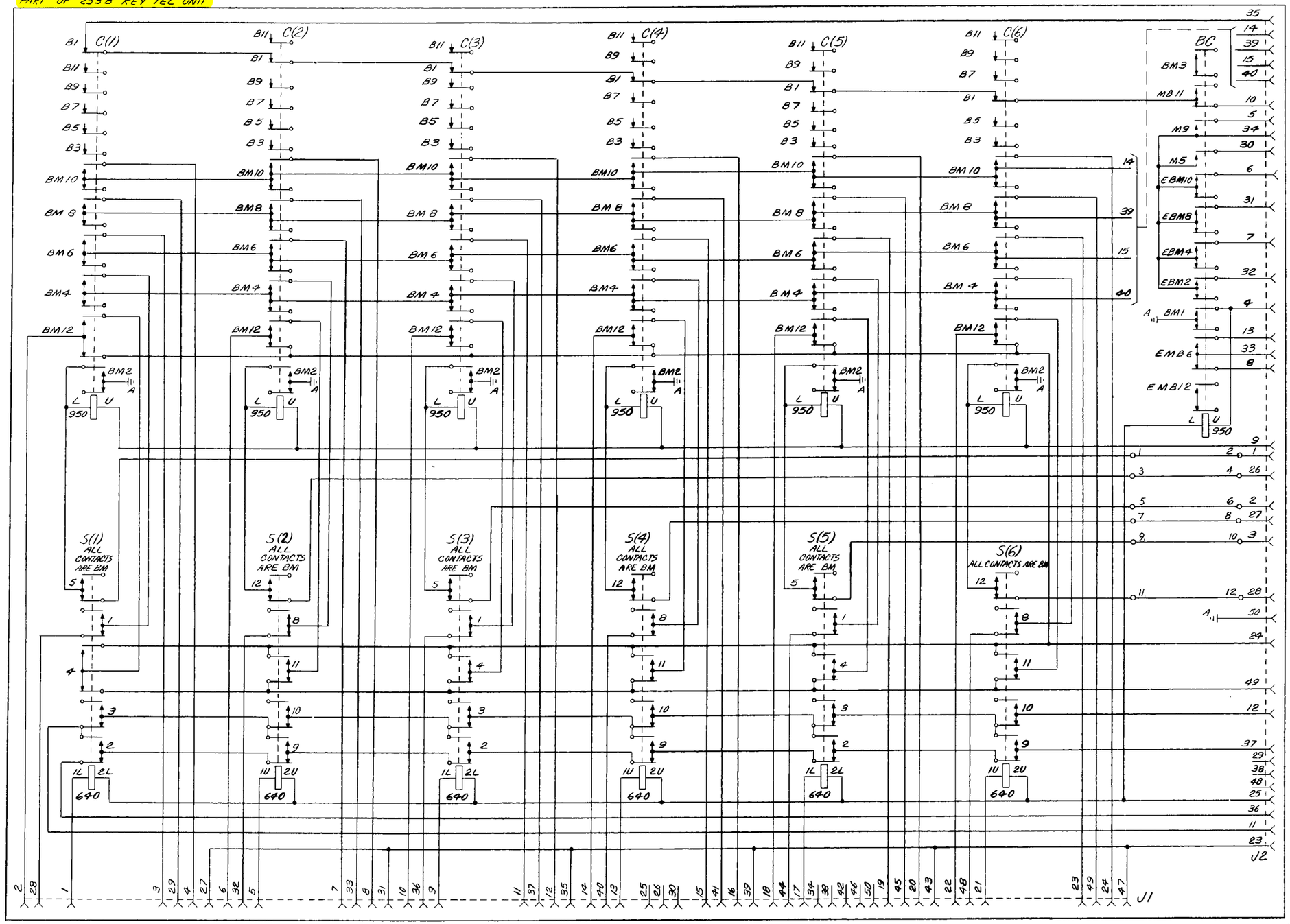

PART OF 253B KEY TEL UNIT

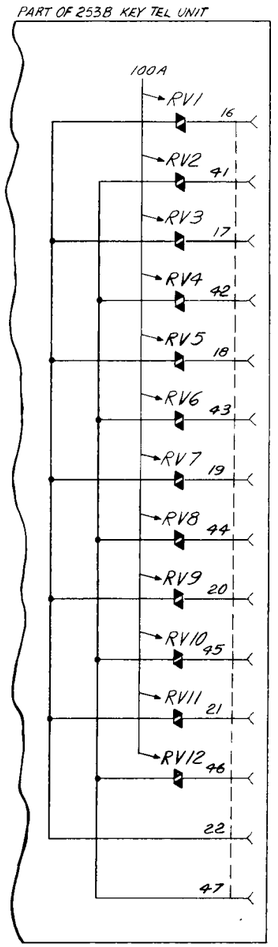

EQUIPMENT NOTES:

201. THIS KEY TEL UNIT IS DESIGNED FOR USE PRIMARILY IN INTERCOMMUNICATION SYSTEM NO. 2A SD-69480-01.

202. THIS KEY TEL UNIT IS 16 MODULES (4- 31/32 IN.) WIDE.

DRAWING ISSUE	
16B	TWJ RRB PEG

KEY TELEPHONE UNIT CIRCUIT
253B K.T.U.

SD-69288-01-C79

BELL TELEPHONE LABORATORIES INCORPORATED

DWG SIZE 6S

PRINTED IN U.S.A.

TCI Library- http://www.telephonecollectors.info/

FIG. 85
COMMON AUDIBLE CONTROL CIRCUIT

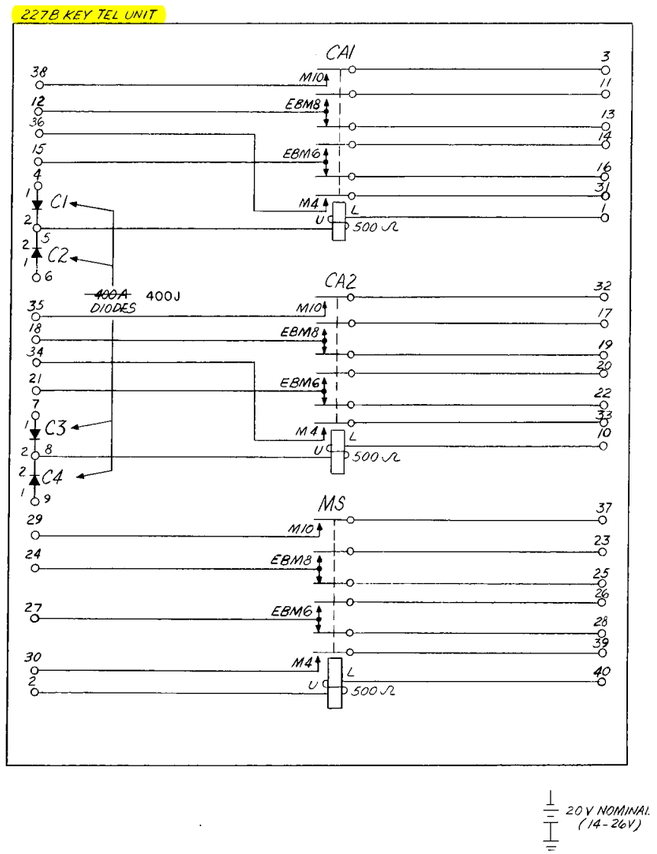

EQUIPMENT NOTES:

201. THIS KEY TEL UNIT IS DESIGNED FOR USE PRIMARILY IN KEY TEL SYSTEM NO. 6A, SD-69286-01 J53023.

202. THIS KEY TEL UNIT IS 7 MODULES (3-1/32 IN.) WIDE.

FIG 86
4 WIRE LINE CIRCUIT
(ROTARY DIAL SETS)

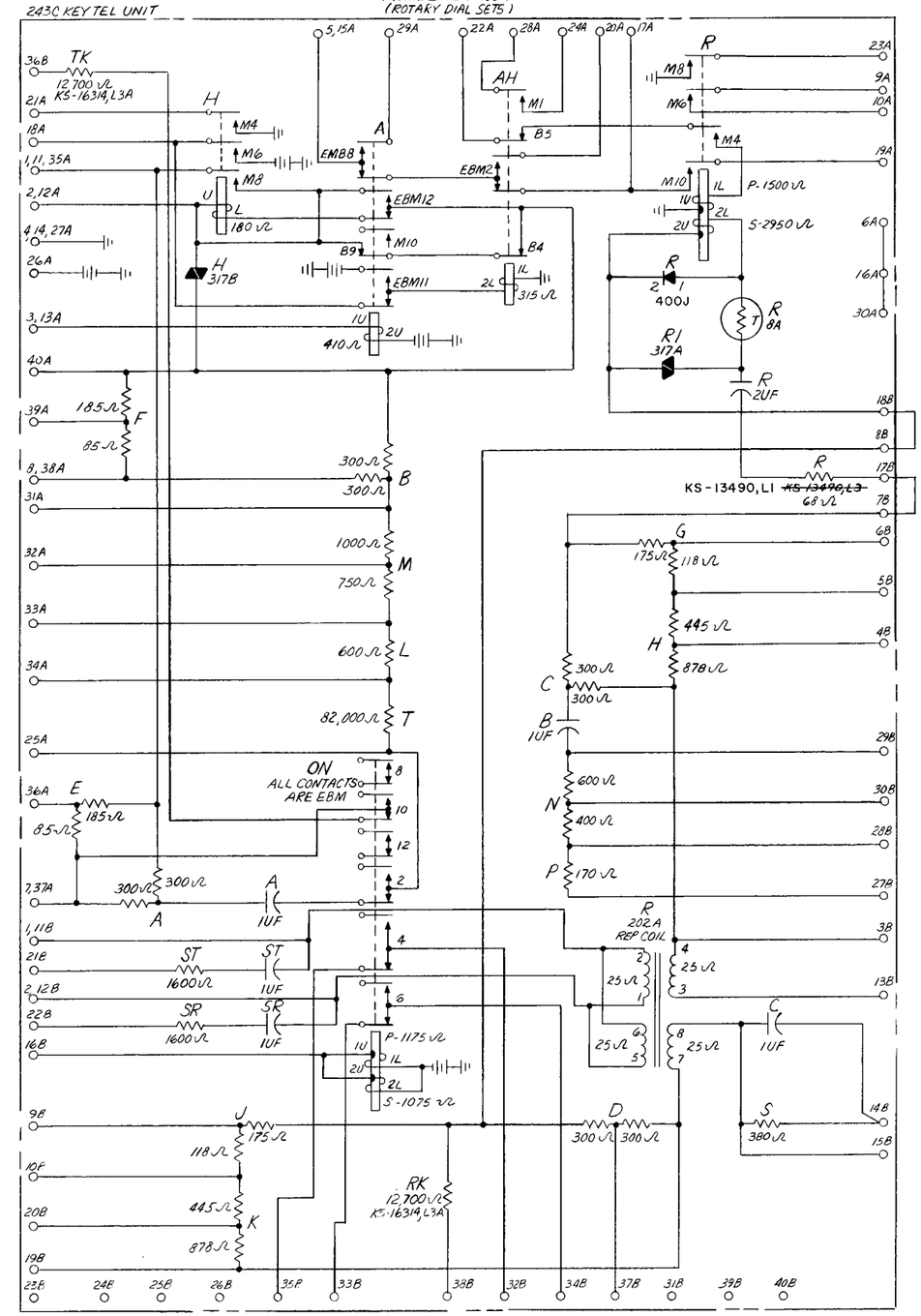

EQUIPMENT NOTES:

201. THIS KEY TEL UNIT IS DESIGNED FOR USE PRIMARILY IN 4-WIRE SUBSCRIBER LINE CIRCUITS SD-69414-01.

202. THIS KEY TEL UNIT IS 19 MODULES (8-9/32 IN.) WIDE.

DRAWING ISSUE	
16B	28A 28B 26G

KEY TELEPHONE UNIT CIRCUIT
(227B, 243C K.T.U.)

SD-69288-01-C80

BELL TELEPHONE LABORATORIES INCORPORATED

DWG SIZE 6S

PRINTED IN U.S.A.

E-7430 (8-63)

TCI Library- http://www.telephonecollectors.info/

FIG. 87
COMMON VISUAL AND AUDIBLE SIGNAL CONTROL CKT

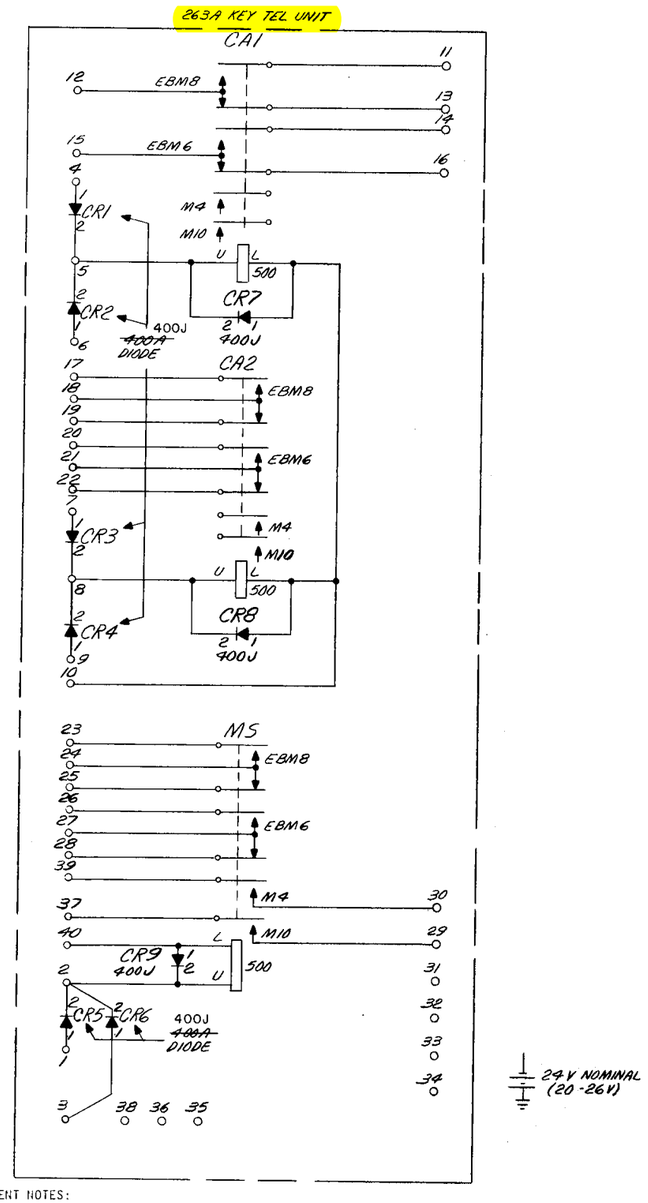

EQUIPMENT NOTES:

201. THIS KEY TEL UNIT IS DESIGNED FOR USE PRIMARILY IN KEY TEL SYSTEM NO. 1A2, SD-69535-01.

202. THIS KEY TEL UNIT IS 7 MODULES (3-1/32 IN.) WIDE.

FIG. 88
BLANK UNIT WITH RELAY MOUNTINGS

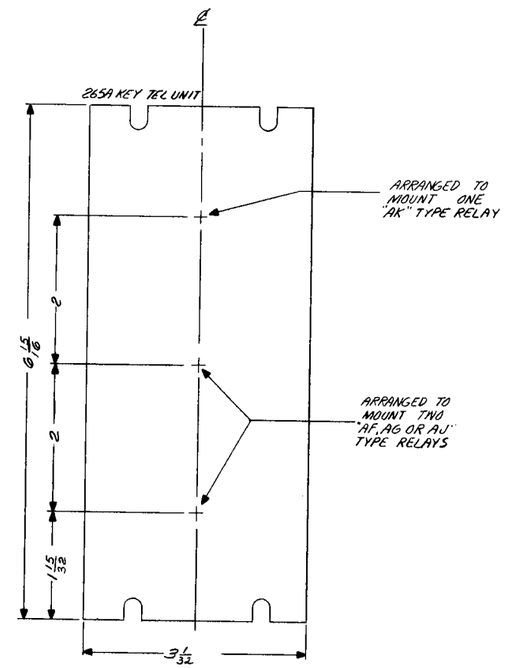

EQUIPMENT NOTES:

201. THIS KEY TEL UNIT IS DESIGNED FOR USE PRIMARILY IN KEY TEL SYSTEM NO. 1A1 (SD-69203-01) AND NO. 6A (SD-69286-01).

202. THIS KEY TEL UNIT IS 7 MODULES (3-1/32 IN.) WIDE.

203. THIS KEY TEL UNIT IS PROVIDED WITH 40 SCREW TERMINAL PUNCHINGS.

DRAWING ISSUE	
16B	TWL RBB PEG
17D	KAM RBB HJT

KEY TELEPHONE UNIT CIRCUIT
(263A, 265A K.T.U.)

SD-69288-01-C81

BELL TELEPHONE LABORATORIES INCORPORATED | DWG SIZE 6S | PRINTED IN U.S.A.

TCI Library- http://www.telephonecollectors.info/

FIG. 89
TOUCH-TONE ADAPTER CIRCUIT
FOR OPERATION WITH 207 TYPE SELECTOR

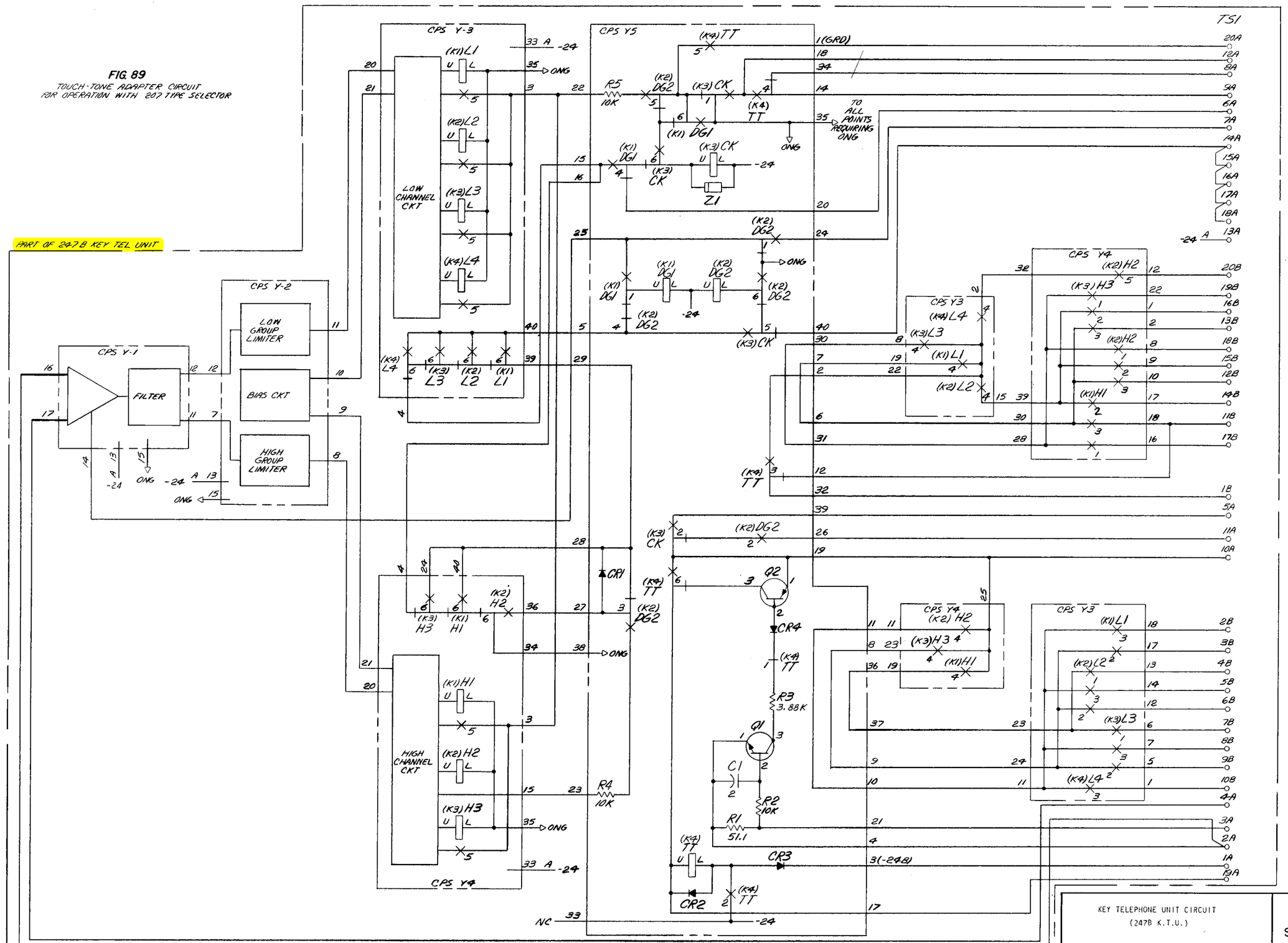

KEY TELEPHONE UNIT CIRCUIT
(247B K.T.U.)

BELL TELEPHONE LABORATORIES INCORPORATED

DWG SIZE 6S

SD-69288-01-C82

PRINTED IN U.S.A.

DRAWING ISSUE

16B	THW RBB PEG
17D	AWS DAB WJV

TCI Library- http://www.telephonecollectors.info/

PART OF FIG. 91
SUB CIRCUITS
PART OF TOUCH-TONE ADAPTER CKT

PART OF 247B KEY TEL UNIT

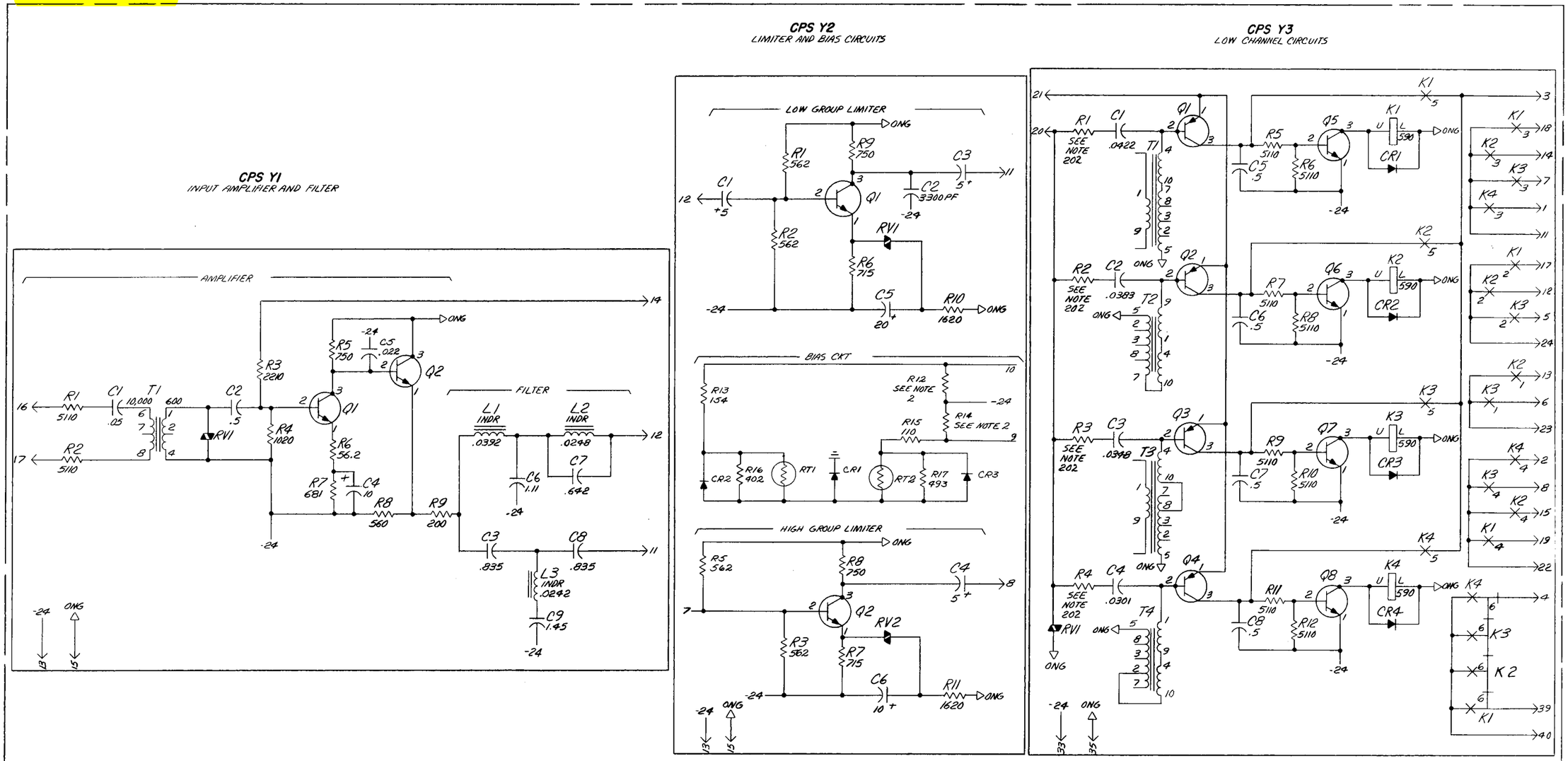

EQUIPMENT NOTES:

201. THE VALUES OF RESISTORS R12 AND R14 SHOULD BE SELECTED FROM THE FOLLOWING LIST TO PROVIDE REQUIRED BIAS.

VOLTAGE ACROSS CR1	RESISTANCE VALUE R12	RESISTANCE VALUE R14
5.8V TO 6.0V	3120	4020
6.1V TO 6.3V	3650	4810
6.4V TO 6.6V	4480	6420

202. TO PROVIDE THE REQUIRED CHANNEL CIRCUIT BANDWIDTH THE VALUES OF RESISTORS R1, R2, R3 AND R4 SHOULD BE SELECTED FROM THE FOLLOWING LIST:

14.7, 31.6, 48.7, 64.9, 80.9, 95.3, 110, 124, 140, 156, 172, 187, 203, 218 AND 234.

203. TO PROVIDE THE REQUIRED CHANNEL CIRCUIT BANDWIDTH THE VALUES OF RESISTORS R1, R2 AND R3 SHOULD BE SELECTED FROM THE FOLLOWING LIST:

80.9, 95.3, 110, 124, 140, 156, 172, 187, 203, 218, 234, 249, 267, 284, 301, 316, 332 AND 348.(SEE SD-69288-01-B5)

204. THIS KEY TEL UNIT IS DESIGNED FOR USE PRIMARILY WITH KEY TEL SYSTEMS NO. 2A AND NO. 6A, TOUCH TONE ADAPTER CKT, SD-69529-01.

205. THIS KEY TEL UNIT IS 17 MODULES (7 1/2 IN.) WIDE

20 V NOMINAL
(14-26V)

DRAWING ISSUE	
16B	TMA RBB PEG
17D	RBB RBB KLJ

KEY TELEPHONE UNIT CIRCUITS
(247B K.T.U.)

SD-69288-01-C84

BELL TELEPHONE LABORATORIES INCORPORATED

CWO SIZE 6S

PRINTED IN U.S.A.

TCI Library- http://www.telephonecollectors.info/

PART OF FIG 91
SUB-CIRCUITS
PART OF TOUCH-TONE ADAPTER CIRCUIT

PART OF 247B KEY TEL UNIT

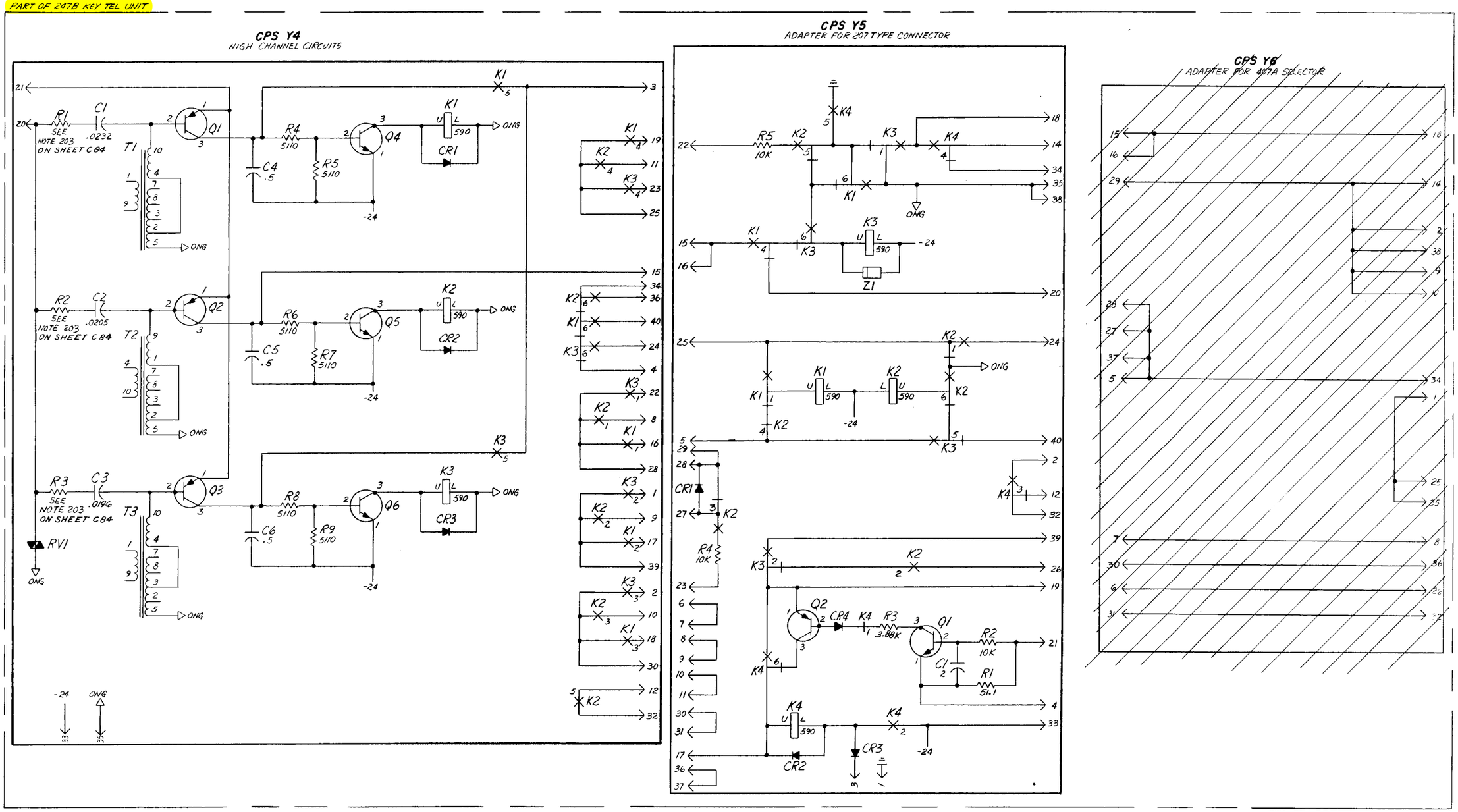

DRAWING ISSUE	
16B	PBB PBB PEG
17D	PBB PBB PEG

KEY TELEPHONE UNIT CIRCUITS
(247B K.T.U.)

BELL TELEPHONE LABORATORIES
INCORPORATED

DWG SIZE 6S

SD-69288-01-C85

PRINTED IN U.S.A.

TCI Library- http://www.telephonecollectors.info/

FIG. 92 (MFR DISC)
ADAPTER UNIT

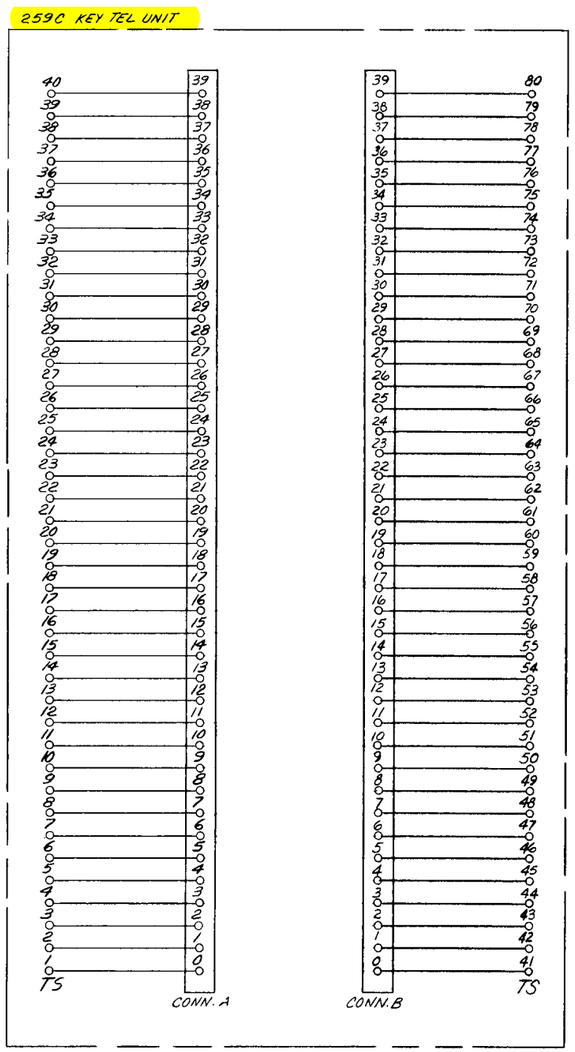

EQUIPMENT NOTES:

201. THIS KEY TEL UNIT IS DESIGNED FOR USE PRIMARILY IN KEY TEL SYSTEMS NO. 1A1 AND 1A2.

202. THIS KEY TEL UNIT IS 9 MODULES (3 7/8 IN.) WIDE.

DRAWING ISSUE	
16B	TNJ 2883 PEG
17D	KMS 2883 411

KEY TELEPHONE UNIT CIRCUIT
(259C K.T.U.)

SD-69288-01-C86

BELL TELEPHONE LABORATORIES INCORPORATED

DWG SIZE 6S

PRINTED IN U.S.A.

TCI Library- http://www.telephonecollectors.info/

FIG. 93
STATION LINE CONCENTRATOR FOR 18 LINES

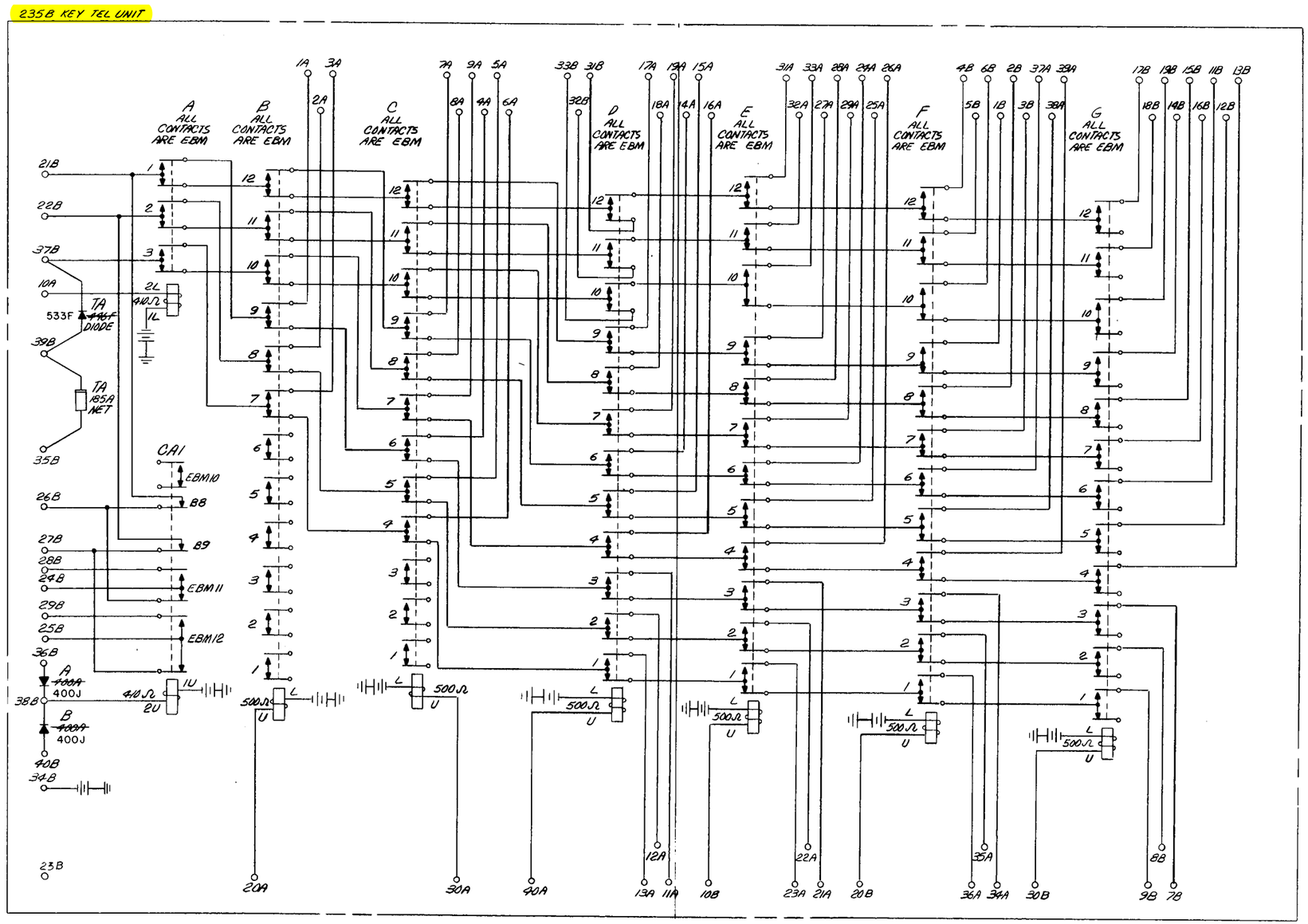

EQUIPMENT NOTES:

201. THIS KEY TEL UNIT IS PRIMARILY FOR USE IN KEY TEL SYSTEM NO. 4A, 1A1 AND 1A2 PER SD-69098-01 AND SD-69099-01.

202. THIS KEY TEL UNIT IS 14 MODULES (6-3/32 IN.) WIDE.

DRAWING ISSUE	
16B	TWJ RBB PEG
17D	RBB RBB WJ

23B

KEY TELEPHONE UNITS CIRCUITS (235B KTU)

SD-69288-01-C87

BELL TELEPHONE LABORATORIES INCORPORATED

DWG SIZE 6S

PRINTED IN U.S.A.

TCI Library- http://www.telephonecollectors.info/

236B KEY TEL UNIT

FIG 94

STATION LINE CONCENTRATOR FOR 30 LINES

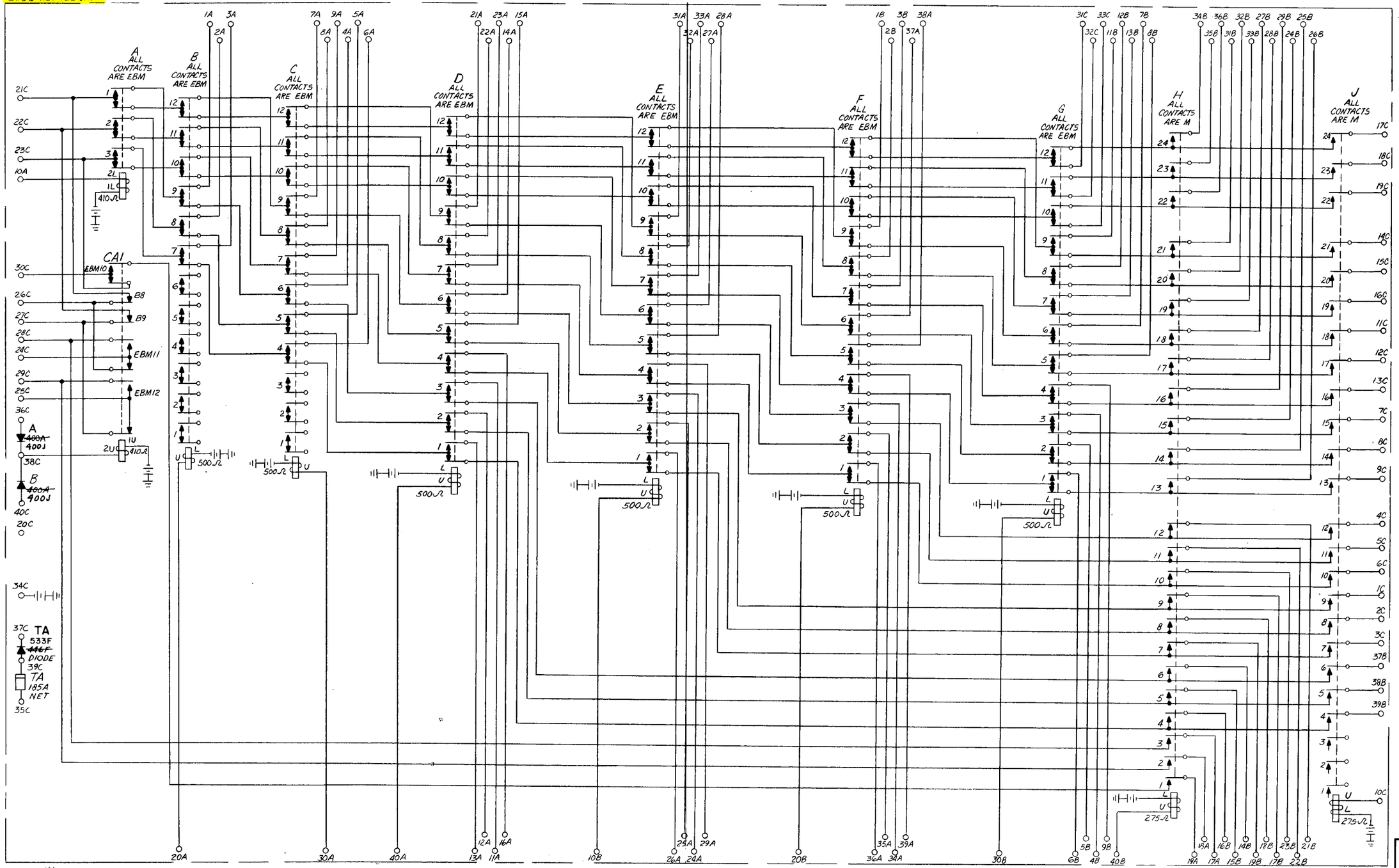

EQUIPMENT NOTES:

201. THIS KEY TEL UNIT IS PRIMARILY FOR USE IN KEY TEL SYSTEM NO. 6A, 1A1 AND 1A2 PER SD-69498-01 AND SD-69499-01.

202. THIS KEY TEL UNIT IS 20 MODULES (8-23/32 IN.) WIDE.

DRAWING ISSUE

16B	P&B P&B PE4

KEY TELEPHONE UNITS CIRCUITS (236B KTU)

SD-69288-01-C88

BELL TELEPHONE LABORATORIES INCORPORATED

DWG SIZE 6S

PRINTED IN U.S.A.

E-7480 (8-68)

TCI Library- http://www.telephonecollectors.info/

FIG 95
AUXILARY LINE
TRANSFER CIRCUIT

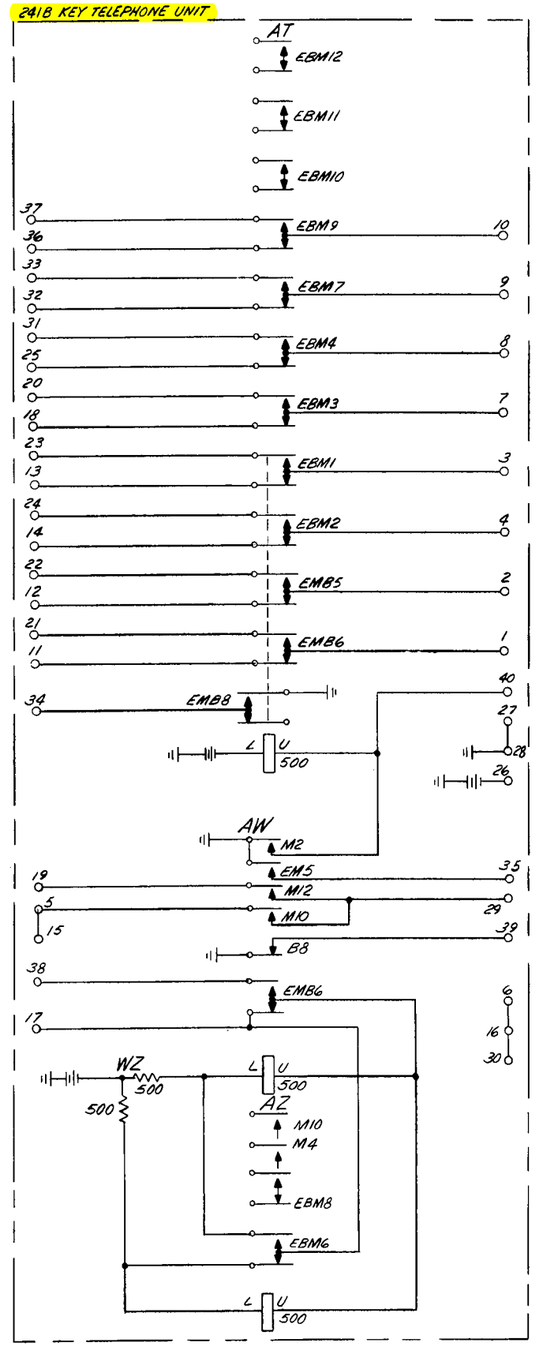

EQUIPMENT NOTES:

201. THIS KEY TEL UNIT IS DESIGNED FOR USE PRIMARILY IN KEY TEL SYSTEMS NO. 1A1, SD-69422-01.

202. THIS KEY TEL UNIT IS 7 MODULES (3-1/32 IN.) WIDE.

DRAWING ISSUE
17D

KEY TELEPHONE UNIT CIRCUIT
241B

SD-69288-01-C89

BELL TELEPHONE LABORATORIES
INCORPORATED

6S

TCI Library- http://www.telephonecollectors.info/

FIG. 96

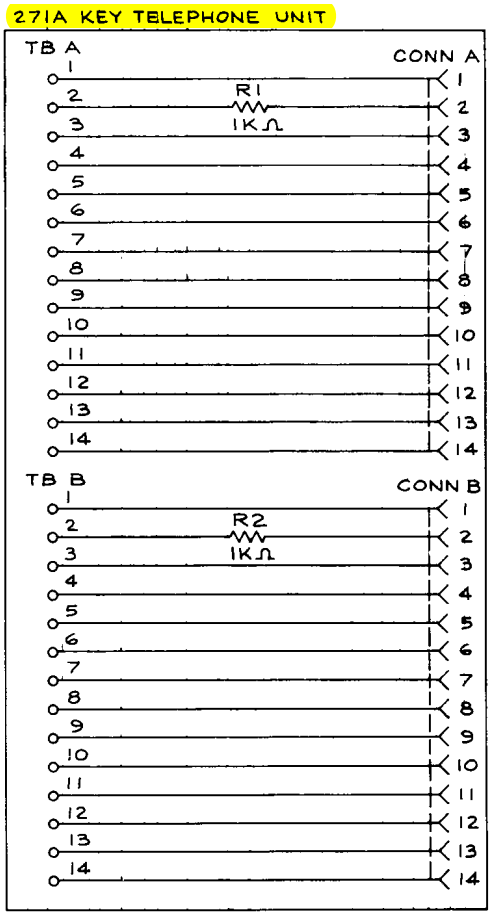

DRAWING ISSUE 18D

KEY TELEPHONE UNITS CIRCUITS
(271A KTU)

SD-69288-01-C90

BELL TELEPHONE LABORATORIES
INCORPORATED

DWG SIZE 3S

PRINTED IN U.S.A.

TCI Library- http://www.telephonecollectors.info/

FIG. 97

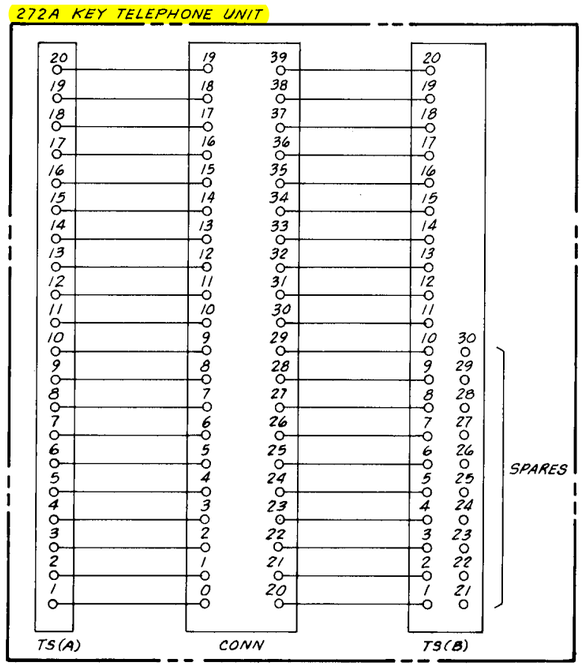

KEY TELEPHONE UNITS CIRCUITS
(272A KTU)

SD-69288-01-C91

BELL TELEPHONE LABORATORIES
INCORPORATED

DWG SIZE 6S

PRINTED IN U.S.A.

TCI Library- http://www.telephonecollectors.info/

DRAWING ISSUE

FIG. 98

FLASH, WINK, RING AND TIMEOUT CIRCUIT
(ELECTRO-MECHANICAL)
(THIS KEY TEL UNIT NOT TO EXCEED 200 LAMPS)

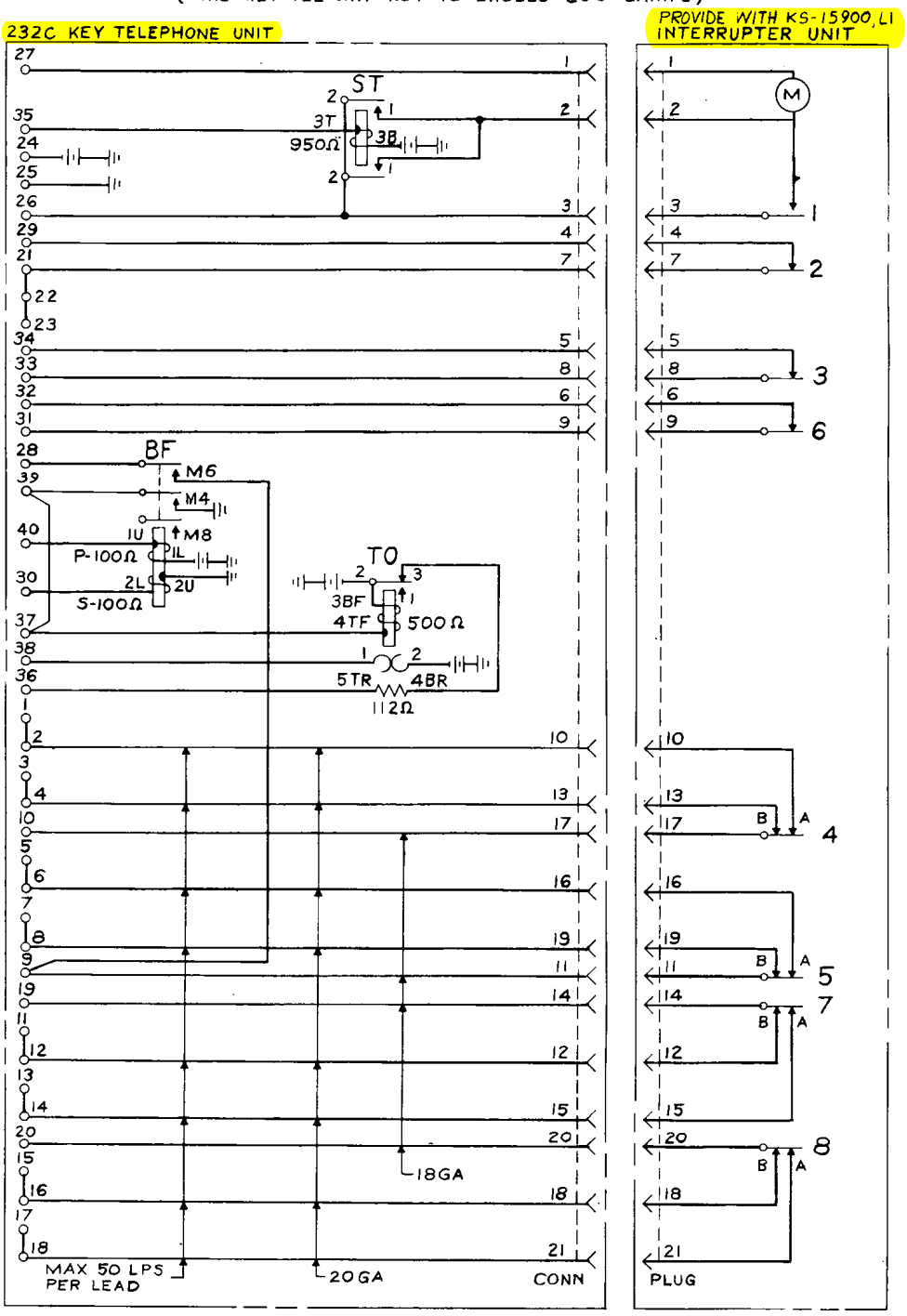

EQUIPMENT NOTES:

201. THIS KEY TEL UNIT IS DESIGNED FOR USE PRIMARILY STATION TEL SYSTEMS VISUAL AND AUDIBLE SIGNAL CIRCUITS, SD 69294-01

202. THIS KEY TEL UNIT IS 8 MODULES (3-15/32 IN.) WIDE.

203. THE KS-15900,L1 UNIT IS NOT FURNISHED AS A PART OF THE 232C KEY TEL UNIT.

20V NOMINAL
(14-26V)

KEY TELEPHONE UNITS CIRCUITS

SD-69288-01-C92

BELL TELEPHONE LABORATORIES INCORPORATED

DWG SIZE 3S

PRINTED IN U.S.A.

TCI Library- http://www.telephonecollectors.info/

CIRCUIT REQUIREMENTS

DRAWING ISSUE: 16B P&B P&B P&G

APPARATUS DESIG	CODE	OPT.	FIG.		MECH REQT BSP FIG.	CONT PRES	ARM. TRVL	CIRCUIT PREPARATION BLOCK OR INSULATE	TEST CLIP DATA CONN BAT.	CONN GRD	TEST SET PREP	SEE TEST NOTE	DIRECT CURRENT FLOW REQT TEST WDG	TEST FOR	AFTER SOAK MA	TEST MA	READJ MA	REMARKS
MAGNETS																		
A	204E		6,									1	ROT	0		330.0	300.0	
			37,									2,3	ROT	0		400.0	380.0	
			42									4	RLS	0		165.0	150.0	
RELAYS																		
A	U1441		2,11		120/120	SPL	SPL					5		0		11.8	11.0	ARM,TRVL 29
A	AF124		13		287									0		17.0	16.0	
A	AF145		40		269									0		17.0	16.0	
A	AJ40		6		52							6	P/S	0		17.5	16.5	
			37										P/S	R		0.1	0.2	
			42															
A	AJ43		33		249									0		24.5	23.0	
			52															
A	AK1		55,		201					1U(A)	GRD		T	0		26.0	24.5	MTD WITH (AH)REL
			56,															
			58,															
			81,															
			86															
A	AK1		34		201								T	0		26.0	24.5	MTD WITH (AH) REL
			35															
			39															
			46															
			47															
			48															
			49															
A	AK14		43		208								BOT	0		25.5	24.0	MTD WITH (CA1) REL
			44															
			93															
			94															
A	AJ43		70		249					U (A)	GRD			0		24.5	23.0	
A1	AF50		24		18									0		23.1	22.0	
A1	AG23		13		286B			(L1) 0						0	FS	6.8	6.4	
														H	FS	1.2	1.1	
														R	FS	0.6	0.8	
A1	AG23		40		286B									0	FS	6.8	6.4	
														H	FS	1.2	1.1	
														R	FS	0.6	0.8	

TEST NOTES:

1. FOR (ROT) MAG ALONE. REMOVE PARALLEL CONN TO 1U (C) REL.
2. (ROT) MAG SHALL STEP THE WIPER ONE COMPLETE STEP.
3. FOR CIRCUIT COMBINATION OF (ROT) MAG AND (C) REL.
4. MOVE SELECTOR OFF NORMAL BEFORE TESTING (RLS) MAG.
5. CONTACTS 5T-6T AND 5B-6B MAKE 6 READJ.4 TEST,MIN TENSION 1T AND 1B 10 GRAMS READJ. 8 GRAMS TEST.
6. ARM.BACK TENSION MIN 20 GRAMS READJ. 15 GRAMS,TEST. CONTACTS BREAK ON 5, NOT BREAK ON 8.5,READJ. BREAK 3.5 NOT BREAK 10,TEST. CONTACTS MAKE 5,NO MAKE 8.5, READJ; MAKE 3.5, NO MAKE 10, TEST.
7. MIN RELEASE TIME 60M/S.
8. REMOVE Z WIRING IF IN PLACE.

PAGE

KEY TELEPHONE UNITS CIRCUITS

SD-69288-01-DI

BELL TELEPHONE LABORATORIES INCORPORATED

PRINTED IN U.S.A.

C-7423 (8-63)

CIRCUIT REQUIREMENTS

DRAWING ISSUE: 16B P&B P&B P&G

APPARATUS DESIG	CODE	OPT.	FIG.		MECH REQT BSP FIG.	CONT PRES	ARM. TRVL	CIRCUIT PREPARATION BLOCK OR INSULATE	TEST CLIP DATA CONN BAT.	CONN GRD	TEST SET PREP	SEE TEST NOTE	DIRECT CURRENT FLOW REQT TEST WDG	TEST FOR	AFTER SOAK MA	TEST MA	READJ MA	REMARKS
RELAYS																		
AH	AK1		34		201							7	B	0	46	38.5	36.5	MTD WITH (A) REL
			35											H	46	5.2	4.9	
			39															
			46															
			47															
			48															
			49															
			55															
			56															
			81															
			86															
AH	AK1		70		201					2L (AH)	BAT	7		0	46	38.5	36.5	MTD WITH (ON) REL
														H	46	5.2	4.9	
AH	AK1		58		201			11(A)	11(A)		BAT	7		0	46	38.5	36.5	MTD WITH (A) REL
														H	46	5.2	4.9	
AL	AF50		53		18					U(AL)	GRD			0		23.0	22.0	
			60											0				
			61															
AT	AJ43		54		249					U(AT)	GRD			0		24.0	23.0	
AW	AF145		54		269									0		17.0	16.0	WDG ALONE
								(AZ) NO						0		36.0	34.0	REQ FOR CKT COMB OF (AW) &(AZ)REL &(WZ) RES
								6M,6B (AW)										
AZ	AF86		54		237									0		17.0	16.0	WDG ALONE
								6M,6B (AW)		U (AZ)	GRD			0		36.0	34.0	REQ FOR CKT COMB OF (AW) & AZ REL & (WZ) RES
B	AG26		6		222B									0	FS	26.5	25.0	
			37											H	FS	4.1	3.9	
			42											R	FS	2.1	2.5	
B	AK13		69		203				2L(B)	1L(B)	B/G		B	0		24.0	23.0	MTD WITH (T) REL
B	MB4		74		50				U(B)	L(B)	B/G	8		0		17.0	16.0	
B,C,D, E,F,G	AJ81		43		220									0		24.5	23.0	
			44															
			93															
			94															
B1	AG28		14		268B									0	FS	15.5	14.5	
			16											H	FS	2.5	2.3	
			25											R	FS	1.1	1.3	
			42															

PAGE

KEY TELEPHONE UNIT CIRCUITS

SD-69288-01-DI

BELL TELEPHONE LABORATORIES INCORPORATED

DWG SIZE 6S

PRINTED IN U.S.A.

TCI Library- http://www.telephonecollectors.info/

CIRCUIT REQUIREMENTS

DRAWING ISSUE: 16B 12B 12B 12G; 17D 12B 12B 4J1

APPARATUS DESIG	APPARATUS CODE	APPARATUS OPT.	APPARATUS FIG.		MECH REQT BSP FIG.	MECH REQT CONT PRES	MECH REQT ARM. TRVL	CIRCUIT PREPARATION BLOCK OR INSULATE	CIRCUIT PREPARATION TEST CLIP DATA CONN BAT.	CIRCUIT PREPARATION TEST CLIP DATA CONN GRD	TEST SET PREP	SEE TEST NOTE	DIRECT CURRENT FLOW REQT TEST WDG	DIRECT CURRENT FLOW REQT TEST FOR	DIRECT CURRENT FLOW REQT AFTER SOAK MA	DIRECT CURRENT FLOW REQT TEST MA	DIRECT CURRENT FLOW REQT READJ MA	REMARKS
RELAYS																		
B1A	AK10		78		7					1L (B1A)	BAT		BOT	0		16.3	15.5	MTD WITH (TB1A)
														H		2.7	2.6	
BC	AJ7		14		1							1		0		1.7	1.6	
			16					(BC1) NO.										
			25															
			42															
BC	AJ500		68		226				L (BC)	U (BC)	B/G			0		17.0	16.0	
			84															
BC1	AG26		14		222B									0	FS	26.5	25.0	
			16											H	FS	4.1	3.9	
			25											R	FS	2.1	2.5	
			42															
BF	AJ50		41		46							2	F/S	0		10.5	10.0	
			51											NO		5.2	5.5	
BF	UA 129		10		111/110	H	35						P/S	0		19.5	18.5	
BY	AG26		28		222B									0	FS	26.5	25.0	
			78											H	FS	4.1	3.9	
														R	FS	2.1	2.5	
BY1	AG29		28		408B									0	FS	23.5	22.0	
			78											H	FS	3.9	3.7	
														R	FS	1.9	2.2	
C	AG27		6,		45B			6M (C)					S	0		47.5	45.0	
			37,									3	P	0	FS	34.0	32.0	
			42									3	P	H	FS	4.8	4.5	
												3	P	R	FS	2.7	3.4	
												4	P	0	FS	220.0	210.0	
												4	P	H	FS	31.0	29.5	
												4	P	R	FS	12.8	16.0	
C	AJ40		29		52							5	P/S	0		17.5	16.5	
													P/S	R		0.1	0.2	
C	AF124		50		287							6		0		17.0	16.0	
			76															
C(1-6)	AJ65		68,94		59			M2(C)(1-6)	L (REL TEST)	U (REL TEST)	B/G			0		14.0	12.5	
C(1-3)	1/2 AK6		69		2				2U (C)	1U (C)	B/G		T	0		29.0	27.5	MTD WITH (S) REL
CA1	AF86		31		237									0		16.8	16.0	
CA2			85															
			87															

TEST NOTES:

1. CONTACT MAKE 5, NO MAKE 8.5, READJ; MAKE 3.5, NO MAKE 10, TEST. ARM. BACK TENSION MIN 18 GRAMS, READJ, 16 GRAMS.
2. CONTACT MAKE 5, NO MAKE 8.5, READJ; MAKE 3.5, NO MAKE 10, TEST. ARM. BACK TENSION MIN 20 GRAMS READJ, 15 GRAMS, TEST.
3. FOR (C) REL ONLY. REMOVE PARALLEL CONN TO T (ROT) MAG.
4. FOR CIRCUIT COMBINATION OF (ROT) MAG AND (C) REL.
5. ARM. BACK TENSION MIN 20 GRAMS, READJ, 15 GRAMS, TEST. CONTACTS BREAK ON 5, NOT BREAK ON 8.5, READJ; BREAK 3.5, NOT BREAK 10, TEST. CONTACTS MAKE 5, NO MAKE 8.5, READJ; MAKE 3.5 NO MAKE 10, TEST.
6. REMOVE STRAP BETWEEN TERMINALS 6 AND 16.
7. CONTACT MAKE 6 READJUST, 4 TEST.

PAGE

KEY TELEPHONE UNIT CIRCUITS

SD-69288-01-D2

BELL TELEPHONE LABORATORIES INCORPORATED

PRINTED IN U.S.A.

E-7483 (8-63)

CIRCUIT REQUIREMENTS

DRAWING ISSUE: 16B 12B 12B 12G; 17D 12B 12B 4J1

APPARATUS DESIG	APPARATUS CODE	APPARATUS OPT.	APPARATUS FIG.		MECH REQT BSP FIG.	MECH REQT CONT PRES	MECH REQT ARM. TRVL	CIRCUIT PREPARATION BLOCK OR INSULATE	CIRCUIT PREPARATION TEST CLIP DATA CONN BAT.	CIRCUIT PREPARATION TEST CLIP DATA CONN GRD	TEST SET PREP	SEE TEST NOTE	DIRECT CURRENT FLOW REQT TEST WDG	DIRECT CURRENT FLOW REQT TEST FOR	DIRECT CURRENT FLOW REQT AFTER SOAK MA	DIRECT CURRENT FLOW REQT TEST MA	DIRECT CURRENT FLOW REQT READJ MA	REMARKS
RELAYS																		
CA1	AK14		43		208								TOP	0		25.5	24.0	MTD WITH (A) REL
			44															
			93															
			94															
CA1	AF86		87		237					TERM. 5	GRD			0		17.2	16.4	
CA2	AF86		31		237									0		16.8	16.0	
			85															
CA2	AF86		87		237					TERM. 8	GRD			0		17.2	16.4	
CH	AF89		14		41B									0		47.5	45.0	
			16															
			25															
			42															
CL	AF86		83		237				TERM. 19		BAT			0		16.8	16.0	
CO	U735		3,5		132/132	H	47							0		17.0	16.0	
CT	AF123		21		217					2U (CT)	GRD		P/S	0		19.0	18.0	PARALLEL AIDING
			65															
			82															
EN	AF50		53		18					U (EN)	GRD			0		23.0	22.0	
			60															
			61															
FA	Y221		8		131/164	H	SPL							0		54.0	51.0	
			12											NO		36.0	38.0	
														H		4.1	3.8	ARM. TRVL 59
														R		1.9	2.5	
FB	Y284		8		212/123	SPL	29				7			0	FS	49.5	47.0	
			12											NO	FS	33.0	35.0	
														H	FS	8.3	7.9	
														R	FS	2.0	2.6	

PAGE

KEY TELEPHONE UNIT CIRCUITS

SD-69288-01-D2

BELL TELEPHONE LABORATORIES INCORPORATED

DWG SIZE 6S

PRINTED IN U.S.A.

TCI Library- http://www.telephonecollectors.info/

CIRCUIT REQUIREMENTS

APPARATUS DESIG	CODE	OPT.	FIG.		MECH REQT BSP FIG.	CONT PRES	ARM. TRVL	CIRCUIT PREPARATION BLOCK OR INSULATE	TEST CLIP DATA CONN BAT.	CONN GRD	TEST SET PREP	SEE TEST NOTE	DIRECT CURRENT FLOW REQT TEST WDG	TEST FOR	AFTER SOAK MA	TEST MA	READJ MA	REMARKS
RELAYS																		
H	UA133		2		229/205	SPL	SLP					1,2	P/S	0		10.5	10.5	
								1U (H)				3	P/S	0		11.0	11.0	ARM. TRVL 17
												3	P/S	NO		7.6	8.1	
												2	P/S	NO		6.6	7.0	
H	UA133		11		229/205	SPL	SPL					1,2	P/S	0		10.5	10.5	
												2	P/S	NO		7.5	8.0	ARM. TRVL 17
								1T (H) (PF) 0				3	P/S	0		11.0	11.0	
												3	P/S	NO		7.6	8.1	
H	UA133		13		229/205	SPL	SPL	(A1) 0				4		0		9.3	8.7	ARM. TRVL 17
H	AG 26		25		222B									0	FS	26.5	25.0	
														H	FS	4.1	3.9	
														R	FS	2.1	2.5	
H	AJ 50		34		46			(AH) 0				5,6,7	P/S	0		10.5	10.0	
			35										P/S	NO		5.2	5.5	
			39															
			40															
H	AJ100		46, 47		46			(AH) 0,				5		0		10.5	10.0	
			48, 49					12B (A)						NO		5.0	5.3	
			55, 56															
			58, 59															
			81, 86															
H	AJ100		70		46			(AH) 0,	L (A)	U (A)	B/G	5		0		10.5	10.0	
								10B (A)						NO		5.0	5.3	
H1	AF125		13		245									0		21.0	20.0	
H1	AJ43		40		249									0		24.5	23.0	
H1	1/2 AK2		64		1				2L	1L	B/G	8	B	0		12.1	11.5	MTD WITH (H2) REL
H2	1/2 AK2		64		1				2U	1U	B/G	8	T	0		12.1	11.5	MTD WITH (H1) REL
H3	1/2 AK2		64		1				2L	1L	B/G	8	B	0		12.1	11.5	MTD WITH (LCK) REL
H,J	AJ203		44		500									0		35.0	33.3	
			94															
J	AF50		24		18									0		23.1	22.0	
K	AF114		64		54			2B, 8M, 10M (K)	L	U	B/G	8		0		25.5	23.0	
CPS Y3																		
K1,K2 K3,K4	MB13		91		201				U	L	B/G	12		0		22.5		
CPS Y4																		
K1,K2 K3	MB13		91		201				U	L	B/G	12		0		22.5		
CPS Y5																		
K1,K2 K3	MB5		91		203				U	L	B/G	12		0		24		
K2	MB7		91		205				U	L	B/G	12		0		24		

DRAWING ISSUE: 16B RBB RBB RCG; 17D RBB RBB HJJ

TEST NOTES:

1. CONTACT MAKE 6 READJUST, 4 TEST.
2. WINDINGS ONLY.
3. EACH WINDING PARALLELED BY ONE UNIT OF A 316A VARISTOR.
4. CONTACTS MAKE 6 READJ; 4 TEST. CONTACTS 1-2T AND 1-2B NEED NOT CLOSE ON THE OPERATE CURRENT. (THIS ADJUSTS FOR USE WHERE ONLY ONE MAKE IS REQUIRED.)
5. CONTACT MAKE 5. NO MAKE 8.5, READJ; MAKE 3.5, NO MAKE 10, TEST ARM. BACK TENSION MIN 20 GRAMS, READJ, 15 GRAMS TEST.
6. REL EQUIPPED WITH A P-19A146 SHIELD.
7. STRAP 1U AND 2L.
8. DISCONNECT TIP LEAD FROM TERM 10B.
9. TEST CLIP DATA IS FOR TERM. ON TERM STRIP (B).
10. ARM TRVL MAX 17. CONTACT MAKE 6, READJ, 4 TEST.
11. CONNECT TEST SET TO TERMINALS 31C & 32C FOR FIGURES 15, 17, 26 & 42; TO TERMINALS 31 & 32 FOR FIGURE 18: AND TO TERMINALS 31A & 32A FOR FIGURE 27. STRAP INDIVIDUAL A & B TERMINALS TO SELECT REL UNDER TEST. FOR TEST WHEN NOT IN CIRCUIT ADJUST WITH 100 OHM ± 5% RES IN PARALLEL.
12. THE CURRENT FLOW INFORMATION APPLIES ONLY WHEN THE RELAY TO BE TESTED IS REMOVED FROM THE PRINTED CIRCUIT BOARD.

PAGE

KEY TELEPHONE UNIT CIRCUITS

SD-69288-01-D3

BELL TELEPHONE LABORATORIES INCORPORATED

PRINTED IN U.S.A.

E-7423 (3-63)

CIRCUIT REQUIREMENTS

APPARATUS DESIG	CODE	OPT.	FIG.		MECH REQT BSP FIG.	CONT PRES	ARM. TRVL	CIRCUIT PREPARATION BLOCK OR INSULATE	TEST CLIP DATA CONN BAT.	CONN GRD	TEST SET PREP	SEE TEST NOTE	DIRECT CURRENT FLOW REQT TEST WDG	TEST FOR	AFTER SOAK MA	TEST MA	READJ MA	REMARKS
RELAYS																		
L	B1175		13		8		30	(H1) 0						0		4.5	4.2	
														R		1.9	2.1	
L	B1175		40		8		30					9		0		4.5	4.2	
														R		1.9	2.1	
L	UA48		3		205/205	SPL	SPL					10		0		3.6	3.4	
L	UA84		5		205/136	H	SPL						P/S	0	25	6.5	6.1	ARM. TRVL 23 MAX
													P/S	R	25	1.7	1.8	
L	U902		7		108/111	H	47							0		15.5	14.4	
L	280M		15, 17		B							11		0	-54		1.1	
														NO	-54		0.2	
														0	-54	6.4	6.1	
														R	-54	1.7	1.8	
L	313C		18,26, 27,42		B									0		5.4	4.9	REPLACES 280M
														R		1.6	2.2	
L1	AG23		13		286B			4M (L1)						0	FS	6.8	6.4	
														H	FS	1.2	1.1	
														R	FS	0.6	0.8	
L1	AG23		40		286B									0	FS	6.8	6.4	
														H	FS	1.2	1.1	
														R	FS	0.6	0.8	
L1	U902		3.5		108/111	H	47							0		15.5	14.4	
L1	1/2 AK 2		64		1				2L	1L	B/G	8	B	0		12.1	11.5	MTD WITH (L2) REL
L2	1/2 AK 2		64		1				2U	1U	B/G	8	T	0		12.1	11.5	MTD WITH (L1) REL
L3	1/2 AK 2		64		1				2L	1L	B/G	8	B	0		12.1	11.5	MTD WITH (L4) REL
L4	1/2 AK 2		64		1				2U	1U	B/G	8	T	0		12.1	11.5	MTD WITH (L3) REL
LCK	1/2 AK 2		64		1				2U	1U	B/G	8	T	0		12.1	11.5	MTD WITH (H3) REL
LO	1/2 AK 4		70		202					1U	GRD			0		11.8	11.3	MTD WITH (R) REL
LS	AG29		15,17 18,26 27,42		408B									0	FS	23.5	22.0	
														H	FS	3.9	3.7	
														R	FS	1.9	2.2	
LS	U902		7		108/111	H	47							0		15.5	14.4	
LT	AG29		26		408B									0	FS	23.5	22.0	
			27											H	FS	3.9	3.7	
														R	FS	1.9	2.2	
LTR	AG26		25		222B									0	FS	26.5	25.0	
														H	FS	4.1	3.9	
														R	FS	2.1	2.5	

DRAWING ISSUE: 16B RBB RBB RCG; 17D RBB RBB HJJ

PAGE

KEY TELEPHONE UNIT CIRCUITS

SD-69288-01-D3

BELL TELEPHONE LABORATORIES INCORPORATED

DWG SIZE 6S

PRINTED IN U.S.A.

TCI Library http://www.telephonecollectors.info/

CIRCUIT REQUIREMENTS

DRAWING ISSUE	
16B	EBB EBB EEG
17D	EPD EPD KJJ

APPARATUS DESIG	APPARATUS CODE	APPARATUS OPT.	APPARATUS FIG.		MECH REQT BSP FIG.	MECH REQT CONT PRES	MECH REQT ARM. TRVL	CIRCUIT PREPARATION BLOCK OR INSULATE	CIRCUIT PREPARATION TEST CLIP DATA CONN BAT.	CIRCUIT PREPARATION TEST CLIP DATA CONN GRD	TEST SET PREP	SEE TEST NOTE	DIRECT CURRENT FLOW REQT TEST WDG	DIRECT CURRENT FLOW REQT TEST FOR	DIRECT CURRENT FLOW REQT AFTER SOAK MA	DIRECT CURRENT FLOW REQT TEST MA	DIRECT CURRENT FLOW REQT READJ MA	REMARKS
RELAYS																		
M	AJ43		30		249									0		24.5	23.0	
M	AJ43		45		249									0		32.0	29.0	
MS	AF86		31 85		237									0		16.8	16.0	
MS	AF86		87		237					TERM.2	GRD			0		17.2	16.4	
N	AJ43		30 45		249									0		24.5	23.0	
NS	AF124		24		287									0		17.0	16.0	
ON	AF86		82		237					U (ON)	GRD			0		16.8	16.0	
ON	AK4		38		202									0		11.9	11.3	MTD WITH (ON1)
ON	AF123		56 81 86		217								P/S	0		19.0	18.0	
ON	1/2 AK1		70		201					1U	GRD			0		26.0	24.5	MTD WITH (AH) REL
ON1	AK4		38		202									0		11.9	11.3	MTD WITH (ON)
P	280FP		29		B								P/S	0	-28		0.7	
													P/S	NO	-28		0.5	
													P/S	0	-28	5.9	5.6	
													P/S	REL	+28	3.1	3.3	
PC1	AJ46		20 79		266			(RO1) 0		U (PC1)				0		12.3	11.7	
PC2	AJ46		20 79		266			(RO1) 0		U (PC2)				0		12.3	11.7	
PF	UA132		8 12		125/125	SPL	SPL					1		0		18.0	17.0	
R	AF123		23		217								P/S	0		19.0	18.0	
R	1/2 AK4		70		202					1L	GRD			0		11.8	11.3	MTD WITH (LO) REL
R	AF125		29		245									0		21.0	20.0	

TEST NOTES:

1. ARM. TRVL 59 MIN TENSION ALL B SPRINGS 10 GRAMS READJ, 8 GRAMS TEST.
2. ARM. BACK TENSION MIN 20 GRAMS, READJ. 15 GRAMS, TEST.
3. TEST BY APPLYING MIN 95V 20~ (1100-1200 RPM) RING, IN SERIES WITH A 13B RES LAMP OR EQUIV AND A 7000-OHM RES TO TERM. NO. 8 WITH GRD ON TERM. NO. 17.
4. TEST BY APPLYING MIN 95V 20~ (1100-1200 RPM) RING. IN SERIES WITH A 13B RES LAMP OR EQUIV AND A 7000-OHM RES TO B4 CONTACT OF (AH) REL AND WITH GRD ON ST LEAD OF CKT UNDER TEST.
5. ARM. BACK TENSION MIN 15 GRAMS TEST, 20 GRAMS READJ.
6. TEST AND READJ THE (R) REL ON AC BY RING ON THE LINE AT CO. PBX LINES SHALL BE CONNECTED TO THE CO WITH THE TALKING KEY NORMAL. THIS TEST MAY ALSO BE MADE BY APPLYING MIN 95V 20~ (1100-1200 RPM) RING. IN SERIES WITH A 13B RES LAMP OR EQUIV AND A 7000-OHM RES TO THE RING OF THE LINE TERM. THE LINE IS OPENED TOWARD THE CO OR PBX.
7. TEST AND READJ BY CONN MIN 95V, 20~ (1100-1200 RPM) RING. SUPPLY THROUGH A 13C RES LAMP OR EQUIV AND A 10,000-OHM NONINDUCTIVE RES IN SERIES.
8. THIS TEST MAY BE MADE BY APPLYING MIN 95V, 20~ 1100-1200 RPM RING IN SERIES WITH A 13B RES LAMP OR EQUIV AND A 7000-OHM RES TO TERM NO. 32 WITH GRD ON TERM NO. 36.
9. THIS TEST MAY BE MADE BY APPLYING MIN 95V, 20~ (1100-1200 RPM) RING. IN SERIES WITH A 13B RES LAMP OR EQUIV AND A 7000-OHM RES TO TERM. NO. F

PAGE

KEY TELEPHONE UNIT CIRCUITS

SD-69288-01-D4

BELL TELEPHONE LABORATORIES INCORPORATED

PRINTED IN U.S.A.

E-7483 (8-63)

CIRCUIT REQUIREMENTS

DRAWING ISSUE	
16B	EBB EBB EEG
17D	EPD EPD KJJ

APPARATUS DESIG	APPARATUS CODE	APPARATUS OPT.	APPARATUS FIG.		MECH REQT BSP FIG.	MECH REQT CONT PRES	MECH REQT ARM. TRVL	CIRCUIT PREPARATION BLOCK OR INSULATE	CIRCUIT PREPARATION TEST CLIP DATA CONN BAT.	CIRCUIT PREPARATION TEST CLIP DATA CONN GRD	TEST SET PREP	SEE TEST NOTE	DIRECT CURRENT FLOW REQT TEST WDG	DIRECT CURRENT FLOW REQT TEST FOR	DIRECT CURRENT FLOW REQT AFTER SOAK MA	DIRECT CURRENT FLOW REQT TEST MA	DIRECT CURRENT FLOW REQT READJ MA	REMARKS
RELAYS																		
R	AJ48		34 35 40 46 47 48 49 55 56 58 81 86		3							2	P	0		8.8	8.0	
														NO		6.1	6.5	
												3	S	0		AC	AC	
R	AJ48		39									2	P	0		8.8	8.0	
														NO		6.1	6.5	
												4	S	0		AC	AC	
R	AJ48		40		3							5	P	0		8.4	8.0	
												5	P	NO		6.1	6.5	
												6	S	0		AC	AC	
R	J23		38		5		23					7	S	0		AC	AC	
													S	NO		7.2	7.2	
R	UA57		2		111/111	H	SPL						P	0		18.0	17.0	
													P	NO		11.4	12.0	ARM. TRVL 23
												8	S	0		AC	AC	
R	UA57		11		111/111	H	SPL					14	P	0		18.0	17.0	
													P	NO		11.4	12.0	ARM. TRVL 23
												9	S	0		AC	AC	
R	UA57		13		111/111	H	SPL						P	0		18.0	17.0	
													P	NO		11.4	12.0	ARM. TRVL 23
												10	S	0		AC	AC	
R	UA71		4		111/111	H	29	3T (RO)						0		4.7	4.4	
														NO		3.0	3.2	
												11		0		AC	AC	
R1	B617		10		9		30					12		0		5.8	5.5	
												12		R		1.9	2.5	
												13		0		AC	AC	
R1	U902		4		108/111	H	47							0		15.5	14.4	
RA	1/2AK17		80		212				2U	1U	B/G		T	0		44.0	41.0	MTD WITH (SW)
RL	AF124		19 42 75		287									0		17.0	16.0	
RO	AF86		14		237									0		16.8	16.0	
RO	AF125		16 25 42		245									0		21.0	20.0	
RO	U204		4 5		102/132	H	53							0		32.5	31.0	

TEST NOTES: (CONTD)

10. THIS TEST MAY BE MADE BY APPLYING MIN 95V, 20~ (1100-1200 RPM) RING. IN SERIES WITH A 13B RES LAMP OR EQUIV AND A 7000-OHM RES TO TERM. NO 32A WITH GRD ON TERM NO. 36A.
11. TEST AND READJ THE (R) REL FOR OPERATION ON AC BY CONNECTING MIN 95V, 20~ (1100-1200 RPM) RING. SUPPLY THROUGH A 13C RES LAMP OR EQUIV AND A 10,000-OHM RES TO B (R) AND RING. GRD TO T (R).
12. WINDING ONLY.
13. APPLY MIN 95V, 20~ (1100-1200 RPM) RING, VOLTAGE IN SERIES WITH A 13B RES LAMP OR EQUIV AND A 7000-OHM RES TO TERM. NO. 1.
14. BLOCK (TO) RELAY OPERATED.

PAGE

KEY TELEPHONE UNIT CIRCUITS

SD-69288-01-D4

BELL TELEPHONE LABORATORIES INCORPORATED

DWG SIZE 6S

PRINTED IN U.S.A.

TCI Library- http://www.telephonecollectors.info/

CIRCUIT REQUIREMENTS

DRAWING ISSUE	
16B	PBB, PBG, PEG
17D	PPG, PPS, HJJ

APPARATUS DESIG	CODE	OPT.	FIG.		MECH REQT BSP FIG.	CONT PRES	ARM. TRVL	CIRCUIT PREPARATION BLOCK OR INSULATE	TEST CLIP DATA CONN BAT.	CONN GRD	TEST SET PREP	SEE TEST NOTE	DIRECT CURRENT FLOW REQT TEST WDG	TEST FOR	AFTER SOAK MA	TEST MA	READJ MA	REMARKS
RELAYS																		
R01	AG26		20		222B			5 (PC2)						0	FS	26.5	25.0	
			79					7 (PC1)						H	FS	4.1	3.9	
								7 (PC2)						R	FS	2.1	2.5	
RU	AJ48		66		3				1L	1U	B/G	1	P	0		8.5	8.0	
														NO		6.9	6.5	
												2	S	0		AC	AC	
S	AJ111		76		328					TERM 16		4		0		19.5	18.5	
S	AJ101		50		323							4		0		18.0	17.0	ARM. TRVL 44
S	AJ100		59		46				L (S)	U (S)	B/G			0		10.5	10.0	
S	B1048		80		82				1M	3M	B/G	3		0		8.9	8.7	
S1	1/2AK15		59		9					1L (S1)	GRD			0		12.6	11.9	MTD WITH (W1) REL
S(1-3)	1/2AK6		69		2				2L	1L	B/G		B	0		29.0	27.5	MTD WITH (C) REL
S(1-6)	1/2AK6		68		2				2L	1L	B/G		B	0		30.0	27.5	
			84						2U	1U	B/G		T	0		30.0	27.5	
ST	EA47		41		1/1							5		0		11.2	10.6	
			49															
			51															
SW	1/2AK17		80		212				2L	1L	B/G		B	0		44.0	41.0	MTD WITH (RA)
T	AG26		6		222B									0	FS	26.5	25.0	
			37					1M (T)						H	FS	4.1	3.9	
			42											R	FS	2.1	2.5	
T	AJ43		53		249					U (T)	GRD	6		0		24.0	23.00	
			60															
			61															
T	1/2AK13		69		203				2U	1U	B/G		T	0		24.0	23.0	MTD WITH (B) REL
T	AJ516		72		299					U	GRD			0		41.0	39.0	
T	AF50		67		18				L		BAT	7		0		22.0	21.0	
			83						L		BAT	7		NO		13.2	12.6	
T1	AG26		24		222B									0	FS	26.5	25.0	
														H	FS	4.1	3.9	
														R	FS	2.1	2.5	
TB	AJ40		21		52								P/S	0		18.0	16.5	
TB	UA129		5		111/110	H	35						P/S	0		19.5	18.5	

TEST NOTES:

1. ARM. BACK TENSION MIN. 20 GRAMS READJ., 15 GRAMS TEST
2. TEST BY APPLYING MIN. 95V 20-CYCLE RINGING IN SERIES WITH A 13B RES LAMP OR EQUIV AND A 7000-OHM RES TO TERM. 3 WITH GRD ON TERM 4.
3. THROUGH PRIMARY AND QUATERNARY IN MULTIPLE AND SECONDARY AND TERTIARY IN MULTIPLE IN SERIES AIDING.
4. REMOVE STRAP BETWEEN TERMINALS 6 AND 16.
5. BLOCK (TO) RELAY OPERATED TO REMOVE HEATER WINDING FROM CIRCUIT WHILE TEST IS APPLIED.
6. PART OF 240A,240B AND 244A KEY TEL UNITS.
7. DISCONNECT NEG. LEAD OF (C1) CAP.
8. CONTACT MAKE 5, NO MAKE 8.5,READJ: MAKE 3.5,NO MAKE 10, TEST, ARM. BACK TENSION 20 GRAMS READJ, 15 GRAMS TEST.
9. CONTACT BREAK 13 READJ, 11.5 TEST, NO BREAK 16.5 READJ, 18 TEST.
10. ARMATURE BACK TENSION MINIMUM 20 GRAMS READJUST, 15 GRAMS TEST.

PAGE

KEY TELEPHONE UNIT CIRCUITS

SD-69288-01-D5

BELL TELEPHONE LABORATORIES INCORPORATED

PRINTED IN U.S.A.

E-7483 (8-63)

CIRCUIT REQUIREMENTS

DRAWING ISSUE	
16B	PBB, PBG, PEG
17D	PPG, PPS, HJJ

APPARATUS DESIG	CODE	OPT.	FIG.		MECH REQT BSP FIG.	CONT PRES	ARM. TRVL	CIRCUIT PREPARATION BLOCK OR INSULATE	TEST CLIP DATA CONN BAT.	CONN GRD	TEST SET PREP	SEE TEST NOTE	DIRECT CURRENT FLOW REQT TEST WDG	TEST FOR	AFTER SOAK MA	TEST MA	READJ MA	REMARKS
RELAYS																		
TB	UA130		3,4		120/111	H	35	5T (TB), 3T (TB)					P/S	0		23.0	21.5	
TB	AJ102		65		75			2L	1U		M	8,9	P/S	0		15.5	14.0	SERIES AIDING
			70										P/S	R		5.8	6.1	
TB	AJ134		82		75				2L (TB)	1U (TB)	M	10	P/S	0		14.4	13.7	SERIES AIDING
TB1	AJ24		14		66								P/S	0		29.0	27.5	
			16															
			25															
			42															
TB1A	AK10		78		7					2U (TB1A)	GRD		TOP	0		7.8	7.4	MTD WITH B1A
														H		1.6	1.5	
TB2	AJ42		25		66								P/S	0		29.0	27.5	
TD	307B		80		51				T	B		11		0		11.0	10.7	ARMATURE TRAVEL 47
														NO		10.0	9.6	
TD	KS-16615,L17		79							3 (TD)	GRD							SET FOR MIN.23 SEC MAX.40 SEC
TDA	AF50		79		18					U(TDA)	GRD			0		23.0	22.0	
TO	271A		41		132/1									0		16.5	15.5	ARM. TRVL 47
			49															
			51															
TO	282A		8		188/2	H	35					12	P	0	FS	41.0	39.0	
			12									12	P	H	FS	3.4	3.2	
												12	P	R	FS	2.0	2.2	
													S	C		33.0		
												13	T	0				
TOA	1/2AK10		64		7			2B(K)	2L	1L	B/G	14,15	B	0		16.5	15.5	MTD WITH (TT) REL
												14,15		H		2.7	2.6	
TOB	AG33		64		305B			2B(TOA)	L	U	B/G	14		0		14.7	14.0	
														H		2.5	2.3	
														R		1.3	1.5	

TEST NOTES (CONT)

11. ADJUST THERMAL CONTACTS ON (TD) RELAY FOR OPERATING TIME OF 30±4 SECONDS, APPLYING DC VOLTAGE (26.5 MAXIMUM, 26.0 MIN.) ALLOW AT LEAST 120 SECONDS FOR THERMAL WINDING TO COOL BETWEEN SUCCESSIVE TESTS.
12. BUFFER SPRINGS MAX 125 GRAMS. MAX TENSION 2B=30 GRAMS.
13. BLOCK (TO) OPERATED FOR 5 MIN BEFORE TESTING HEATER WDG. HEATER SHALL OPEN BOT 1-2 IN NOT LESS THAN 20 SEC WITH 16 TO 26 VOLTS APPLIED.
14. DISCONNECT TIP LEAD FROM TERM 10B.
15. DISCONNECT BATTERY LEAD FROM TERM 1A.

PAGE

KEY TELEPHONE UNIT CIRCUITS

SD-69288-01-D5

BELL TELEPHONE LABORATORIES INCORPORATED

DWG SIZE 6S

PRINTED IN U.S.A.

TCI Library- http://www.telephonecollectors.info/

CIRCUIT REQUIREMENTS

DRAWING ISSUE 16B RBB RGB PKG

APPARATUS DESIG	CODE	OPT.	FIG.		MECH REQT BSP FIG.	CONT PRES	ARM. TRVL	CIRCUIT PREPARATION BLOCK OR INSULATE	TEST CLIP DATA CONN BAT.	CONN GRD	TEST SET PREP	SEE TEST NOTE	DIRECT CURRENT FLOW REQT TEST WDG	TEST FOR	AFTER SOAK MA	TEST MA	READJ MA	REMARKS
RELAYS																		
TR	AJ43		19		249									0		24.5	23.0	
			42															
			75															
TR	AK4		38		202									0		11.9	11.3	MTD WITH (TR1)
TR1	AK4		38		202									0		11.9	11.3	MTD WITH (TR)
TRA	AJ43		64		249				L	U	B/G	1		0		24.5	23.0	
TT	1/2 AK10		64		7			8M,10M (TT)	2U	1U	B/G	1,2	T	0		7.8	7.4	MTD WITH (TOA)REL
TTO	280M		64		8				TERM.13B	TERM.10B	B/G	1,2		0	-54		1.1	
														NO	-54		0.8	
														0	-54	6.4	6.1	
														R	-54	1.7	1.8	
TTO	313C															5.4	4.9	
																1.6	2.2	
W	Y318		9		219/201	H	50							0	42	29.0	27.5	
														H	42	7.3	6.9	
														R	42	1.5	1.9	
W	AJ36		59		215			(W1) 0		U (W)	GRD			0		52.0	49.0	
W	AF145		53		269							3		0		17.0	16.0	WDG ALONE
			60					(Z) NO		U (W)	GRD					36.0	34.0	REQ FOR CKT COMB OF (W) & (Z) REL & (WZ) RES
			61					6M, 6B (W)										
			72															
W	1/2 AK17		80		212				2U	1U	B/G		T	0		44.0	41.0	MTD WITH (Z)
W1	1/2 AK15		59		9				1U (W1)	2U (W1)	B/G			0		14.3	13.5	MTD WITH (S1)
									1U (W1)	2U (W1)	B/G			H		6.0	5.6	
WS	U422		9		132/101	H	47							0		14.4	13.7	
WT	UA76		9		106/101	H	44	3T (WT)						0		19.0	18.0	
														NO		10.8	11.4	
Z	AF86		53		237							3		0		17.0	16.0	WDG ALONE
			60															
			61					6M, 6B (W)		U (Z)	GRD			0		36.0	34.0	REQ FOR CKT COMB OF (W) & (Z) REL & (WZ)RES
			72															
Z	AF6		59		29			(W1) 0		U (Z)	GRD			0		101.0	95.0	
								6B (W)										
Z	1/2 AK17		80		212				2L	1L	B/G		B	0		44.0	41.0	MTD WITH (W)

TEST NOTES:

1. DISCONNECT TIP LEAD FROM TERM. 10B.
2. DISCONNECT BATTERY LEAD FROM TERM. 1A.
3. PART OF 240A, 240B, 244A, AND 258A KEY TEL UNITS.

PAGE

KEY TELEPHONE UNIT CIRCUITS

SD-69288-01-D6

BELL TELEPHONE LABORATORIES INCORPORATED

PRINTED IN U.S.A.

E-7483 (8-63)

TCI Library- http://www.telephonecollectors.info/

CIRCUIT REQUIREMENTS

APPARATUS					MECH REQT			CIRCUIT PREPARATION			TEST SET PREP	SEE TEST NOTE	DIRECT CURRENT FLOW REQT					REMARKS
DESIG	CODE	OPT.	FIG.		BSP FIG.	CONT PRES	ARM. TRVL	BLOCK OR INSULATE	TEST CLIP DATA				TEST WDG	TEST FOR	AFTER SOAK	TEST	READJ	
									CONN BAT.	CONN GRD					MA	MA	MA	

DRAWING ISSUE

16B 28A 28B 28C

PAGE

KEY TELEPHONE UNIT CIRCUITS

SD-69288-01-D6

BELL TELEPHONE LABORATORIES INCORPORATED

DWG SIZE 6S

PRINTED IN U.S.A.

TCI Library- http://www.telephonecollectors.info/