SUBSCRIBER SETS—415H, CD MAGNETO USED WITH COIN COLLECTORS CONNECTIONS

1.00 INTRODUCTION

This section covers the combination of apparatus, circuit diagrams, and connections for the 415H and CD magneto subscriber sets used with coin collectors.

2.00 GENERAL

2.01 These sets may come equipped with either a *104A* or *113D* induction coil, but the coils are not interchangeable in the field. The corresponding terminals of the two coils are given below:

104A — L1	RBK	C	A	BL	SL
113D — S	S1	S2	S3	P	P

2.02 Sets are provided with means whereby any one of four different network combinations, A to D, may be made in the induction coil balancing circuit to obtain satisfactory sidetone balance when the sets are used on the different types of subscriber loops employed in the plant.

2.03 Unless otherwise specified, sets are furnished with the type A network as shown in the circuit diagrams herein. To obtain the other types of networks, changes in the connections of the set must be made as indicated below:

Sets Equipped with *104A* Induction Coils

Network B: Disconnect capacitor leads from terminals A and SL. Terminate both leads on an unused terminal in the set. Connect a KS-8058, 400-ohm resistor between terminals A and SL (see Notes 1 and 3).

Network C: Disconnect capacitor lead from terminal A and connect to terminal C.

Network D: Disconnect capacitor leads from terminals A and SL. Terminate both leads on an unused terminal in the set. Disconnect one end of strap from terminal C and connect it to terminal SL.

Sets Equipped with *113D* Induction Coils

Network B: Disconnect strap from between terminals A and BK. Terminate both ends of strap on terminal C. Connect a *63FD* or KS-8058, 280-ohm resistor between terminals A and BK (see Notes 1, 2, and 3).

Network C: Disconnect strap from between terminals A and BK. Terminate both ends of strap on terminal C. Connect a *449H*, or equivalent, capacitor between terminals C and BK (see Note 3).

Network D: Disconnect end of strap from terminal A and connect it to terminal C.

> ***Note 1:*** The KS-8058 resistor requires no mounting.
> ***Note 2:*** The *63FD* resistor mounts in the upper lefthand corner of the set.
> ***Note 3:*** Capacitors and resistors are not furnished as part of the set and must be ordered separately.

2.04 Use of a *449E* or equivalent 1-uf capacitor in series with the talking circuit or ringer is optional. This capacitor has the following uses:

- When connected in series with the talking circuit only, as shown in Table B, the bells on the line can be rung with a receiver off hook.
- When connected in series with the ringer only, as shown in Table C, the line may be tested on the same basis as common battery lines. This arrangement is also used in some special cases where there is battery on the magneto line and the switchboard drop operates whenever a receiver is removed from its hook.

  > ***Note 1:*** When used in series with a high-impedance ringer, the capacitor should be 0.5 uf (*449H* or equivalent).
  >
  > ***Note 2:*** An HA1 receiver should not be used where there is battery on the line.

- When connected in series with both the talking circuit and the ringer, as shown in Table D, the bells at stations where a receiver is off hook can be rung, and the line can be tested on the same basis as a common battery line. This arrangement cannot be used where switchhook supervision is employed as in the special case described in 2.04.

© American Telephone and Telegraph Company, 1962
Printed in U. S. A.

TCI Library- http://www.telephonecollectors.info/

TABLE A

COMBINATION OF APPARATUS

Sub. Set Code	Components			
	Induction Coil	Capacitor	Ringer	Generator
415H	104A or 113D*	149F, 449F, 1149B, or 449H	51A, 38B, or B1F	22A
415CD			6JA or B1D	

* Furnished only when specified.

TABLE B

CAPACITOR IN SERIES WITH TALKING CIRCUIT

Wire or Lead		Terminals		
		Individual or Bridged	Ring Party	Tip Party
Capacitor Lead	Y	L1	L1	L1
	Y	COND	COND	COND
Lead from L1 or S on Induction Coil	SL	COND	COND	COND

TABLE C

CAPACITOR IN SERIES WITH RINGER

Wire or Lead		Terminals		
		Individual or Bridged	Ring Party	Tip Party
Capacitor Lead	Y	COND	COND	COND
	Y	L2	L2	L1
Ringer Lead	R	COND	COND	COND
	BK	L1	GND	GND

TABLE D

CAPACITOR IN SERIES WITH TALKING CIRCUIT AND RINGER

Wire or Lead		Terminals		
		Individual or Bridged	Ring Party	Tip Party
Capacitor Lead	Y	COND	COND	COND
	Y	GN	GN	L1
Ringer Lead	R	COND	COND	COND
	BK	L1	GND	GND
Mounting Cord or Local Wiring	R	R	R	R
	Y	Y	Y	Y
	BK	BK	BK	BK
	GN	COND	COND	GN
Lead from L1 or S on Induction Coil	SL	L1	L1	COND

TCI Library- http://www.telephonecollectors.info/

3.00 CONNECTIONS

3.01 To connect the subscriber set to its associated coin collector the appropriate circuit diagram herein should be matched with the foldout page in the section covering the connections for the coin collector.

3.02 Connections in table form are also given for each type of subscriber set connection. Table F covers the connections when used with coin collectors.

3.03 Coin collectors of the types listed in Table E may be used with the 415H or CD subscriber set.

TABLE E

ASSOCIATED APPARATUS

Hand Set Type	Rcvr, Xmtr Type
152C, D	150K, L
164C, D	162A, B
182C, D	162C, D

TABLE F

CONNECTIONS

Wire or Lead		Terminals on Sub. Set Used with Coin Collector, Type 150, 152, 162, 164, or 182
Inside Wire from Protector or Line	Ring	L2
	Tip	L1
	GND	GND
Ringer Lead	R	L2
	BK	L1
Magneto Lead	R	L2
	BK	L1
Local Wiring to Coin Collector	R	R
	Y	Y
	BK	BK
	GN	GN

TCI Library- http://www.telephonecollectors.info/

This Page Left Intentionally Blank

TCI Library- http://www.telephonecollectors.info/

3.04 Circuit diagram of 415H or CD subscriber set when used with coin collectors:

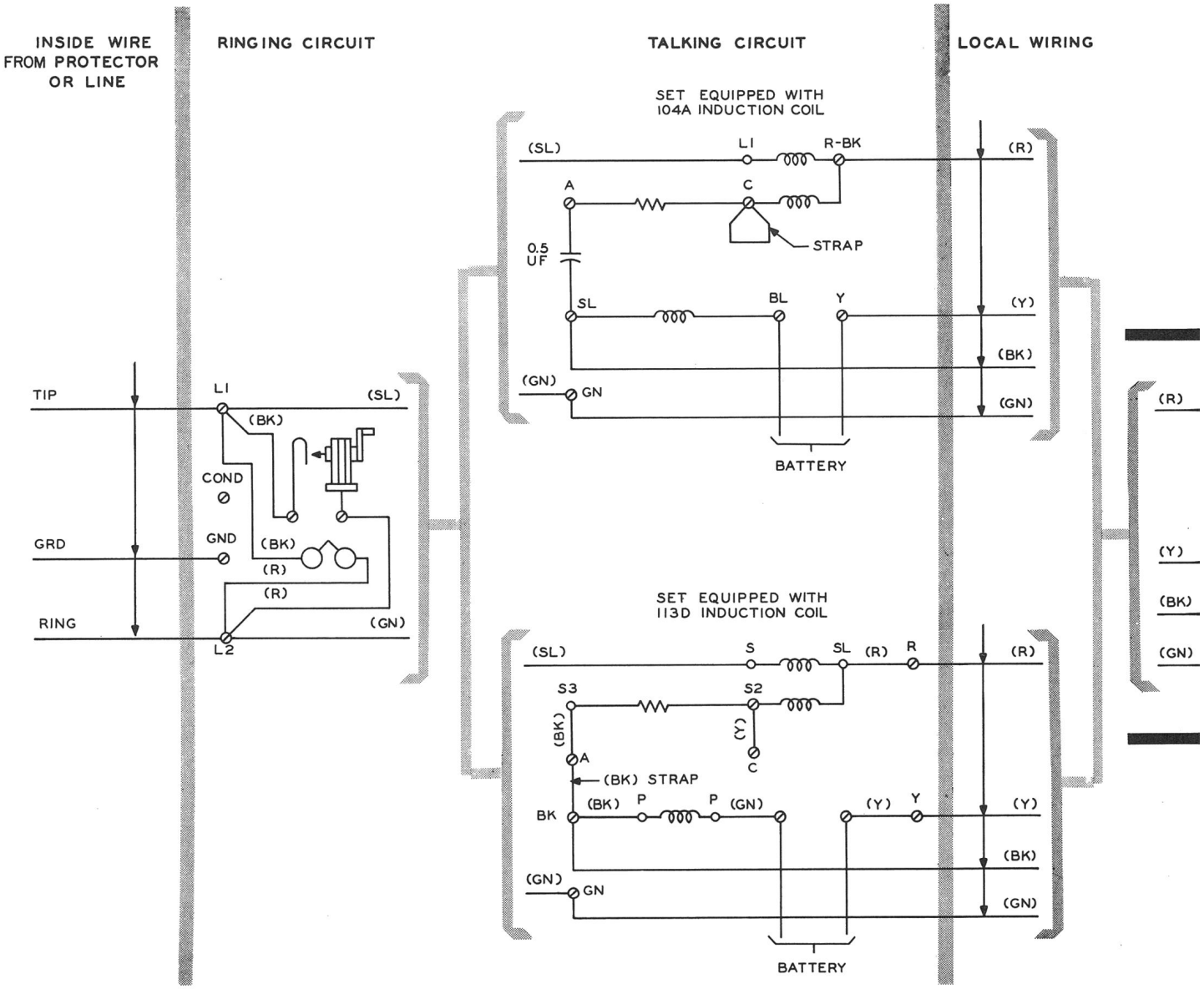

TCI Library- http://www.telephonecollectors.info/