SERVICE

513-, 514-, AND 515-TYPE KEY SERVICE UNITS

IDENTIFICATION, CONNECTION, AND MAINTENANCE

1A2 KEY TELEPHONE SYSTEM

CONTENTS PAGE

CONTENTS PAGE

Printed in U.S.A.

CONTENTS PAGE

CONTENTS PAGE

CONTENTS PAGE

CONTENTS PAGE

CONTENTS PAGE

CONTENTS PAGE

CONTENTS PAGE

CONTENTS PAGE

CONTENTS PAGE

1. GENERAL

1.01 This section provides information for the 513-, 514-, and 515-type Key Service Units (KSUs) used in 1A2 Key Telephone System (KTS) arrangements.

1.02 This section is reissued to add information on the following KTUs:

400H KTU (CO/PBX Line Cicuit)

440A and 478B KTUs (TOUCH-TONE Adapter)

494A KTU (TOUCH-TONE Selector Circuit)

498A KTU and 116A1 Circuit Module (Music-On-Hold).

1.03 This issue of the section is based on the following drawings:

SD-69513-01, Issue 15 (400D (MD) KTU)

SD-69651-01, Issue 1 (400G (MD) KTU)

SD-69475-01, Issue 6 (401A KTU)

SD-69567-01, Issue 15 [407B (MD) or C, 420A, 422A (MD), 422B, 423A, 424B (MD) or C, 425A (MD), 425B, and 494A KTUs]

SD-69590-01, Issue 4 (413A, 421A, 448A, and 449A KTUs)

SD-69559-01, Issue 9 (414A, 415A, 416A, 418A, 419A, 461A, and 469A KTUs)

SD-69561-01, Issue 2 (417A KTU)

SD-69595-01, Issue 8 (426A and 427B, Series 4, or 427C KTUs)

SD-69489-01, Issue 5 (428A KTU)

SD-69922-01, Issue 1 (451B, ♦498A KTU and 116A1 Circuit Module)♦

SD-69917-01, Issue 1 (467A KTU)

SD-69530-01, Issue 6 (429A [MD], 429B, and 430A KTUs)

SD-69906-01, Issue 1 (440A KTU)

SD-69931-01, Issue 4 (478B KTU)

SD-69921-01, Issue 1 (471A and 479A KTU)

SD-69597-01, Issue 2 (1A2 KTS, 513-, 514- and 515-Type KSUs)

♦SD-69942-01, Issue 1 (400H KTU)♦

If this section is to be used with equipment or apparatus reflecting later issues of the drawings, reference should be made to the SDs and CDs to determine the extent of the changes and the manner in which the section may be affected.

2. IDENTIFICATION

PURPOSE

2.01 The 513-, 514-, and 515-type KSUs (Fig. 1) provide mounting and connecting facilities for 400-series KTUs used to provide 1A2 KTS services.

APPLICATION

2.02 The 513-, 514-, and 515-type KSUs are applicable to the 1A2 Key Telephone System.

ORDERING GUIDE

2.03 Key service units and associated apparatus are ordered as follows:

- Unit, Service, Key, 513A1
- Unit, Service, Key, 513A2 (513A1 with 19C2 power unit)
- Unit, Service, Key, 513A3 (513A1 with 20C2 power unit)
- Unit, Service, Key, 514A1
- Unit, Service, Key, 515A1 (513A1 and 514A1)
- Unit, Service, Key, 515A2 (513A2 and 514A1)
- Unit, Service, Key, 515A3 (513A3 and 514A1)
- Unit, Telephone, Key (order as required).

(a) ***Replaceable Components*** (see Table A):

(b) ***Optional Components*** (order separately; see Table B):

(c) ***Associated Apparatus*** (order separately; see Table C):

DESIGN FEATURES

A. General

(a) Will accept most 400-series KTUs (see Table D for connector selection and arrangement).

(b) Removable cover of glass-reinforced polyester resin.

(c) Arranged for wall mounting. (The 513- and 515-type KSUs may be mounted on a floor stand using a 77-type apparatus mounting. See Section 463-140-100.)

(d) 66-type connecting blocks mounted internally to connect internal and external cables and optional wiring (Fig. 2). Figure 3 shows the terminal arrangement of the 66R-type blocks.

(e) Designation strip holder and tab assembly serve as a retainer to lock KTUs in connectors.

B. 513-Type Key Service Unit

(a) Space is provided on the backboard for one 1A1 matrix block, or a second 66R3 connecting block when required.

(b) Two interrupter connectors (J9, J10) accept any of the KS-type interrupters shown in Table C. The choice of interrupter is determined by the lamp capacity of the system and/or the type of power available for the motor.

(c) Dedicated leads for battery and ground, interrupter, lamp steady, lamp flash, lamp wink, and ringing are wired to the same numbered contacts on each connector (J1-J8). These leads terminate on connecting block 3 (Fig. 4).

(d) Nondedicated leads are terminated on connecting blocks 1 and 2 for connections to station and/or distribution cable, and for strapping between units when required (Fig. 4).

(e) Fuse panel provides power distribution to the connectors for lamp and interrupter functions. See Table E for fusing information.

(f) Can use 19C2, 20C2 or external power unit. The 20C2 power unit includes a 30-Hz frequency generator. ***When ringing voltage is required for a system using a 19C2 power unit, an external source must be provided.***

(g) When required, a 47C power unit is available as a battery reserve power supply for use during commercial power failures. It must be ordered separately along with a KS-20390, List 1 nickel-cadmium battery pack (Table C). When the system has common audible signaling arrangements, an optional 116A frequency generator

must be ordered (Table C) and mounted on the back wall of the power unit. The 47C power unit is interconnected between the standard ac operated power unit and the key telephone equipment. (See Section 518-010-107.) The 47C power unit may be mounted on a rack, in a 16-type apparatus cabinet or equivalent, or in a 513A or 515A1 key service unit when the regular power unit is externally mounted.

(h) If an external power supply is used, as many as three 69F apparatus mountings can be mounted in the space normally occupied by the power unit. Each 69F (Fig. 5) apparatus mounting will accommodate two 4-inch (with the addition of an 834055907 [P-40V590] guide assembly) or one 8-inch 400-series KTU. The 69F apparatus mounting must be ordered separately and installed in the field.

(i) Unit is 17-3/8 inches wide by 17 inches high by 11 inches deep.

C. 514-Type Key Service Unit

(a) For use with the 513-type KSU to provide for growth and/or expansion of features by furnishing additional mounting and connecting facilities (Fig. 1 and 2).

(b) Furnished with hardware for joining the 514A1 KSU to the 513-type KSU.

(c) Dedicated leads for battery and ground, interrupter, lamp flash, lamp steady, lamp wink, and ringing are wired to the same numbered contacts on each connector (J11-J18). These leads terminate on connecting block 3 (Fig. 6).

(d) Nondedicated leads are terminated on connecting block 4 (Fig. 6) for connection of station and/or distribution cable. Some nondedicated leads, in addition to being terminated on the connecting block, are brought out in cable tails for termination on block 1 or 2 of the 513-type KSU, when required. Others are cable leads only, for termination on block 1 or 2 as required. (Do not cut leads. Insulate and store as required.)

(e) Space is provided for a 69E (Fig. 7) apparatus mounting to allow for adding one 8-inch or, with the addition of an 834055907 (P-40V590) guide assembly, two 4-inch KTU printed wiring boards (400-series KTUs). The 69E apparatus mounting must be ordered separately and installed in the field.

(f) Unit is 8-1/36 inches wide by 16-11/16 inches high by 10-11/16 inches deep.

D. 515-Type Key Service Unit

(a) A mechanically joined and partially interwired combination of 513-type and 514A1 KSUs (Fig. 1 and 2).

(b) Intended for use where the initial installation requirement exceeds the service provided by a 513-type KSU.

(c) Unit is 25-1/2 inches wide by 17 inches high by 11 inches deep.

3. INSTALLATION

PLANNING

3.01 Select a wall location for mounting that will allow at least 9-1/2 inches of wall space beyond each side of the backboard to provide for full opening of the carrier assemblies. The same amount of space for the carrier assemblies is required if the KSU is floor-mounted using a 77-type apparatus mounting.

3.02 Customer must provide a 110V ac outlet not under control of a wall switch and separately fused for 2 amperes, if possible.

3.03 When a 513-type KSU is installed, allow at least 17-3/4 inches of space on the right side to provide room to add a 514-type KSU, should it ever be needed.

As shown in Table D, several connectors (jacks) offer limited service to 40- and 80-pin KTUs. The following procedure will simplify installation while allowing for additional features in the future.

3.04 Using Table D, select KTUs to be installed for the desired service features and list in the order they appear from top to bottom of table.

3.05 Assign selected KTUs to connectors in the numerical preference given in the table.

Examples:

(a) An installation in a 513A KSU requires five CO line circuits and a 19-code rotary dial intercom with one intercom station requiring a long-line circuit. KTUs are selected and listed in the following manner:

(1) 424B (MD) or C KTU (19-code dial intercom)

(2) 420A KTU (dial intercom long line circuit)

(3) Five 400-type KTUs (CO/PBX line units).

The 424B (MD) or C is assigned its first (only) choice of connectors, J-1 and J-2. The 420A is assigned its first choice of connectors, J-6. The 400-type KTUs are assigned the remaining connectors in numerical preference: first choice being J-3; second, J-4; third, J-5; fourth, J-7; and fifth, J-8. (If additional KTU services were to be added, they would require the addition of a 514A1 KSU.)

(b) An initial installation in a 515A KSU requires four CO line circuits and a TOUCH-TONE®, 10-code dial intercom. KTUs are selected and listed in the following manner:

(1) ◗494A KTU (TOUCH-TONE Selector)◖

(2) Four 400-type KTUs (CO/PBX line units).

The ◗494A◖ is assigned its first (only) choice of connectors, J-1 and J-2. The 400-type KTUs are assigned in numerical preference from the remaining jacks: first choice being J-3; second, J-4; third, J-5; and fourth, J-6 [if a fifth line (400-type KTU) were to be added, it would be assigned the next available connector, J-15, etc].

3.06 If 69-type apparatus mountings are to be used, externally mounted 66-type connecting blocks must be provided to accommodate the connections.

3.07 Refer to the following sections for additional information required to plan the installation of a key service unit:

- 518-010-101—Centralized Key Telephone Installations
- 518-010-105—Grounding and Special Protection Requirements, Key Telephone Systems
- 518-010-106—Power Unit Selection, Key Telephone Systems
- 518-215-400—Key Telephone Units, Line Services
- 518-215-401—Key Telephone Units, Auxiliary Line Services
- 518-215-402—Key Telephone Units, Intercom Services
- 518-215-403—Key Telephone Units, Control Services.

INSTALLING

3.08 Use care when unpacking to prevent unit from falling out of the cover.

3.09 Remove the cover.

3.10 Mount the KSU on the wall at the selected location, using the provided template and appropriate fasteners or mount on 77-type apparatus mounting following instructions furnished with the apparatus mounting.

3.11 Unlatch and open the carrier assemblies.

3.12 If an external power supply is used, connect it using the power cord furnished with the 513A1 KSU. See Table F for connections.

3.13 Connect the circuit ground to an approved ground.

3.14 If the available 110-volt ac outlet is not a 3-wire grounded type, an adapter must be provided and a frame ground should be installed as follows:

(1) Prepare a separate ground wire by attaching a lug (supplied) to a No. 14 gauge wire of sufficient length to reach from the KSU to an approved local ground (should be same as protector and electric ground).

(2) Attach the ground wire at the KSU by placing the lug under one of the power unit mounting screws. Tighten the screw securely.

3.15 Install 69E or F apparatus mounting, and 1A1 matrix block, or 66R3 connecting block (Fig. 2) if they are required.

3.16 Terminate the telephone set cabling, CO, Centrex, or PBX pairs, option straps, and interblock connections on the connecting blocks.

3.17 If a 514A1 KSU is being added to a 513-type KSU:

(1) Attach the two 834056053 (P-40V605) straps to the back of the 513-type KSU, using four of the eight 802103713 (P-210371) screws provided. Do not tighten the screws.

(2) Slide the 514A1 KSU over the protruding ends of the straps and butt the two units together: 513-type KSU on the left and the 514A1 KSU on the right.

(3) Secure the straps to the 514A1 KSU with the other four 802103713 (P-210371) screws.

(4) Tighten the eight screws.

(5) Fasten the 514A1 KSU to the wall or apparatus mounting. Mounting must be expanded to proper width.

(6) Make required connections to connecting blocks in 513-type KSU. See Table G for connections.

3.18 Close and latch carrier assembly.

3.19 Install the KSUs by inserting the plug-end of the boards into the selected connectors. Make certain all option straps are in place on KTUs as shown in associated connection figure.

Exercise care when handling and inserting plug-in KTUs to avoid damage to the printed wiring and other components.

3.20 Plug power cord into 110-volt ac outlet provided.

3.21 Test operation of KSU for services provided.

3.22 Replace and secure cover. If a 514A1 KSU is being added, attach and secure the 129A cover (furnished with the 514A1 KSU) and return the 128A cover (furnished with the 513A1 KSU) to stock.

4. CONNECTIONS

4.01 Connections for 513-, 514-, and 515-type KSUs are shown in Tables F through I and Fig. 8 through 78. See Table of Contents for connection tables and figures.

5. MAINTENANCE

5.01 Maintenance of a 1A2 KTS is limited to normal station repairs and wiring checks of the mounting facility and terminal field. No field maintenance is to be performed on the plug-in KTUs.

5.02 Care must be used when removing and inserting plug-in KTUs into the connectors to avoid damage to the printed wiring and other components.

5.03 When trouble is encountered, proceed as follows:

(a) Determine if trouble is at individual station or common to the system.

(b) If common to the system:

(1) Check power supply and fuses.

(2) From nature of trouble report, determine which KTU is causing trouble.

(3) Replace KTU with one known to be working properly to determine whether trouble is in KTU or external to it (be sure to strap in the correct options on replacement KTU, as applicable).

(c) If replacement of the KTU does not clear trouble, the trouble is external to the KTU and the complete wiring serving the KTU should be checked. Place original KTU back in service.

5.04 When a KTU or a connector is taken out of service or replaced by another, all nondedicated wiring for the connector or KTU should be removed to avoid damage to a different type KTU should it be inadvertently plugged into the connector.

Factory Wiring

5.05 Factory-furnished wiring for lamp, battery and signaling circuits are shown in the following figures:

Fig. 79—AT1 and BT1 Circuits

Fig. 80—Bat. A (1) and Bat. A (2) Circuits

Fig. 81—Bat. B (1) and Bat. B (2) Circuits

Fig. 82—MB, MG, and ST Circuits

Fig. 83—Lamp Steady Circuits

Fig. 84—Lamp Flash Circuits

Fig. 85—Lamp Wink Circuits

Fig. 86—±10 Volt, ±18 Volt, ±105 Volt, and RN Audible Signaling Circuits

5.06 Factory wiring for connectors J-1 through J-8 and J-11 through J-18 is shown in numerical order in Fig. 87 through 102.

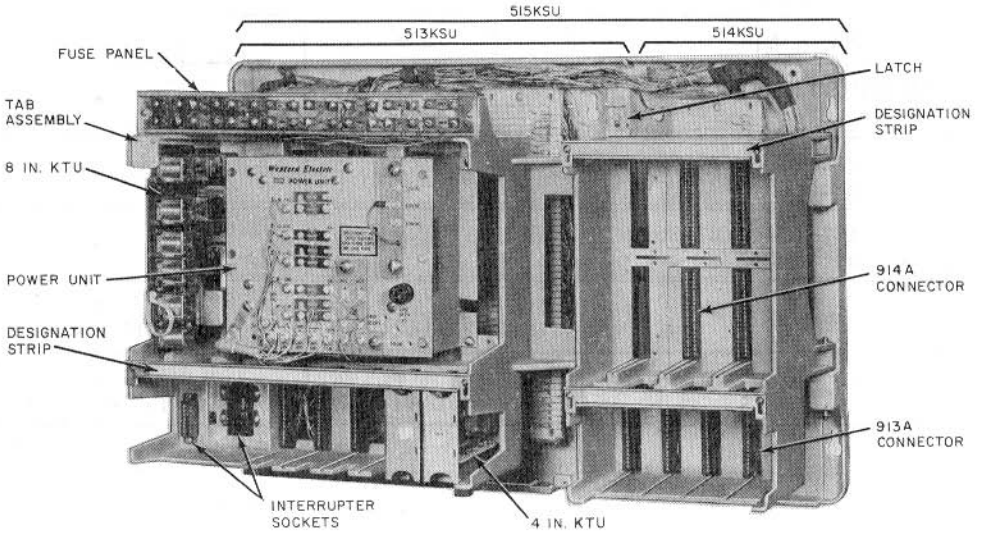

Fig. 1—515A3 Key Service Unit, Cover Removed

TABLE A

REPLACEABLE COMPONENTS

ITEM	•INDICATES KSU USED IN		
	513A1, A2, A3	514A1	515A1, A2, A3
834481699 (P-44Y169) Assembly, Tab	•		•
Cover, 128A	•		
Cover, 129A			•
Fuse, 24C (2-amp)	•		•
Fuse, 24E (1/2-amp)	•		•
Fuse, 24F (5-amp)	•		•
834056012 (P-40V601) Strip, Designation	•		•
834056020 (P-40V602) Strip, Designation		•	•
834481673 (P-44Y167) Strip, Designation	•		•
Unit, Power, 19C2	• (513A2 Only)		• (515A2 Only)
Unit, Power, 20C2	• (513A3 Only)		• (515A3 Only)

TABLE B

OPTIONAL COMPONENTS
(ORDER SEPARATELY)

ITEM	QUANTITY	● INDICATES KSU USED IN		
		513A1, A2, A3	514A1	515A1, A2, A3
Block, Connecting, 66R3	1	●		●
801608845 (P-160884) Screw, RHM (For 66R3 Connecting Block)	2	●		●
Block, Matrix, 1A1	1	●		●
801608530 (P-160853) Screw, RHM (For 1A1 Matrix Block)	2	●		●
Mounting, Apparatus, 69E	1		●	●
Mounting, Apparatus, 69F	As Req'd (3 Max)	●		●
834055907 (P-40V590) Assembly, Guide*	As Req'd	●	●	●
834481699 (P-44Y169) Assembly, Tab*	As Req'd	●	●	●
834481673 (P-44Y167) Strip, Designation*		●	●	●
Mounting, Apparatus, 77C	1	●		●

* Used on 69E or F apparatus mounting.

TABLE C

ASSOCIATED APPARATUS
(ORDER SEPARATELY)

ITEM	QUANTITY	● INDICATES KSU USED IN (OR WITH)		
		513A1, A2, A3	514A1	515A1, A2, A3
Interrupter, KS-15900, L1 (10V ac)	1	●		●
Interrupter, KS-19175, L1 (10V ac)	1	●		●
Interrupter, KS-19384, L2 (24V dc)	1	●		●
Interrupter, KS-19385, L2 (24V dc)	1	●		●
824013262 (P-40J326) Cord, Power (1-1/2 ft)	1	● (513A2 & 513A3 Only)		● (515A2 & 515A3 Only)
824013270 (P-40J327) Cord, Power (2 ft)	1			
824013288 (P-40J328) Cord, Power (4 ft)	1			
824013296 (P-40J329) Cord, Power (6 ft)	1			
824010995 (P-40J099) Cord, Power (12 ft)	1			
Unit, Power, 47C	1	●		●
Generator, Frequency, 116A (For 47C Power Unit)	1	●		●
Battery, KS-20390, L1 (For 47C Power Unit)	1	●		●

* If the 834059990 (P-40V999) retainer bracket is not in place, the KS-15900L1 interrupter equipped with a locking screw must be used.

TABLE D

CONNECTOR SELECTION AND ARRANGEMENT OF 400 SERIES KTUs IN 513-, 514-, AND 515-TYPE KSUs

KTU	SIZE (IN.)	SIZE PINS	SERVICE FUNCTION	515 KSU (SEE NOTE)															
				513 KSU¶								514 KSU							
				CONNECTORS								CONNECTORS							
				J 1	J 2	J 3	J 4	J 5	J 6	J 7	J 8	J 11	J 12	J 13	J 14	J 15	J 16	J 17	J 18
				40	40	20	20	20	20	40	40	40	40	40	40	20	20	20	20
407B (MD) or C	8	80	Dial Intercom, 10-Code Selector Ckt	1		*	*	*	*	*	*	*	*	*	*	*	*	*	*
424B (MD) or C	8	80	Dial Intercom, 19-Code Selector Ckt	1		*	*	*	*	*	*	*	*	*	*	*	*	*	*
494A	8	80	TOUCH-TONE Selector Circuit	1		*	*	*	*	*	*	*	*	*	*	*	*	*	*
426A & 427B (Series 4) or 427C	8	80	TOUCH-TONE Adapter Ckt	*	*	*	*	*	*	*	*	1		*	*	*	*	*	*
	8	80		*	*	*	*	*	*	*	*	*	*	1		*	*	*	*
440A or 478B	8	40	TOUCH-TONE Adapter Ckt	Can be used in 69E or F apparatus mounting only.															
425A (MD) or B	8	80	Dial Intercom, Flashing Lamp Circuit	*	*	*	*	*	*	*	*	1		2		*	*	*	*
419A¶	8	80	Automatic Signaling, Ringdown Private Line Ckt	3		*	*	*	*	*	*	1		2		*	*	*	*
479A	8	40	Rotary Dial Toll Restriction	3		*	*	*	*	*	*	1		2		*	*	*	*
429A (MD) or B	4	40	Supplementary Hold Detector Ckt	*	*	*	*	*	*	1	2	*	*	*	*	*	*	*	*

TABLE D (Contd)

CONNECTOR SELECTION AND ARRANGEMENT OF 400 SERIES KTUs IN 513-, 514-, AND 515-TYPE KSUs

KTU	SIZE (IN.)	SIZE PINS	SERVICE FUNCTION	515 KSU (SEE NOTE) 513 KSU¶ CONNECTORS J 1	J 2	J 3	J 4	J 5	J 6	J 7	J 8	514 KSU CONNECTORS J 11	J 12	J 13	J 14	J 15	J 16	J 17	J 18
				40	40	20	20	20	20	40	40	40	40	40	40	20	20	20	20
421A	4	40	Power Failure Transfer Ckt (General Purpose)	7 †	8 †	*	*	*	*	1	2	3 †	4 †	5 †	6 †	*	*	*	*
			Intercom DSS	*	*	*	*	*	*	1	2	3	4	*	*	*	*	*	*
			Audible Signal Suppression	*	*	*	*	*	*	1	2	3	4	5	6	*	*	*	*
			Preset Conference Circuit	*	*	*	*	*	*	1	2	3	*	4	*	*	*	*	*
448A	4	40	Delayed Transfer Control Circuit	*	*	*	*	*	*	1	2	3	4	5	6	*	*	*	*
449A	4	40	Immediate Transfer Control Circuit	*	*	*	*	*	*	1	2	3	4	5	6	*	*	*	*
422A (MD) or B	4	40	Dial Intercom, Station Busy Ckt	*	*	*	*	*	*	1	2	3	*	4	*	*	*	*	*
417A	4	40	Add-On Conference Circuit	*	*	*	*	*	*	1	2	3	*	4	*	*	*	*	*
428A	4	40	Multiline Exclusion Circuit	16 ‡	15 ‡	14 ‡	13 ‡	12 ‡	11 ‡	1	2	3	10 ‡	4	5 ‡	6 ‡	7 ‡	8 ‡	9 ‡
420A	4	18	Dial Intercom, Long Line Ckt	*	*	8	7	6	5	10	9	14	13	12	11	4	3	2	1

TABLE D (Contd)

CONNECTOR SELECTION AND ARRANGEMENT OF 400 SERIES KTUs IN 513-, 514-, AND 515-TYPE KSUs

KTU	SIZE (IN.)	SIZE PINS	SERVICE FUNCTION	515 KSU (SEE NOTE) 513 KSU¶ CONNECTORS J 1	J 2	J 3	J 4	J 5	J 6	J 7	J 8	514 KSU CONNECTORS J 11	J 12	J 13	J 14	J 15	J 16	J 17	J 18
				40	40	20	20	20	20	40	40	40	40	40	40	20	20	20	20
423A	4	20	Dial Intercom, Aud Ringback, Dial, and Busy Tone Ckt	*	*	8	7	6	5	10	9	14	13	12	11	4	3	2	1
400-Type (Note 2)	4	18	CO/PBX Line Ckt	15	16	1	2	3	4	9	10	11	12	13	14	5	6	7	8
401A	4	18	Manual Intercom Ckt	15	16	8	7	6	5	10	9	14	13	12	11	4	3	2	1
413A	4	18	Aux Ring-up Ckt	15	16	8	7	6	5	10	9	14	13	12	11	4	3	2	1
414A§	4	20	Manual Signaling, Ringdown Private Line Ckt	15	16	14	13	12	11	10	9	8	7	6	5	4	3	2	1
415A	4	18	Automatic, DC Signaling, Private Line Ckt	15	16	8	7	6	5	10	9	14	13	12	11	4	3	2	1
416A	4	20	Station Line Ckt	15	16	8	7	6	5	10	9	14	13	12	11	4	3	2	1
418A	4	20	Short Range, DC Signaling, Private Line Ckt	15	16	8	7	6	5	10	9	14	13	12	11	4	3	2	1
430A	4	20	Flutter Generator Ckt	15	16	8	7	6	5	10	9	14	13	12	11	4	3	2	1
451B (Note 2)	4	40	Music-On-Hold Ckt	5	*	*	*	*	*	1	2	3	*	4	*	*	*	*	*
461A	4	18	Manual Signaling, Ringdown Private Line Ckt	15	16	8	7	6	5	10	9	14	13	12	11	4	3	2	1

♦TABLE D (Contd)♦

CONNECTOR SELECTION AND ARRANGEMENT OF 400 SERIES KTUs IN 513-, 514-, AND 515-TYPE KSUs

KTU	SIZE (IN.)	SIZE PINS	SERVICE FUNCTION	515 KSU (SEE NOTE) 513 KSU¶ CONNECTORS J 1	J 2	J 3	J 4	J 5	J 6	J 7	J 8	514 KSU CONNECTORS J 11	J 12	J 13	J 14	J 15	J 16	J 17	J 18
				40	40	20	20	20	20	40	40	40	40	40	40	20	20	20	20
467A	4	18	Low-Voltage Monitor Ckt	15	16	1	2	3	4	9	10	11	12	13	14	5	6	7	8
469A	4	18	Lamp Extender Ckt	15	16	1	2	3	4	9	10	11	12	13	14	5	6	7	8
471A	4	18	Battery Reversal Toll Restriction	15	16	1	2	3	4	9	10	11	12	13	14	5	6	7	8
498A (Note 1&2)	4	40	Music-On-Hold	5	*	*	*	*	*	1	2	3	*	4	*	*	*	*	*

Note 1: This KTU is equipped to serve 4 lines. With addition of a 116A1 CM, an additional 3 lines may be served when wired in a 69E or F apparatus mounting. The 116A1 CM wiring is not compatible with 515 KSU.

Note 2: The 400H KTU is not compatible with the 451B KTU; therefore, it must be used with the 498A KTU for Music-On-Hold.

* Not usable.

† Restricted to transfer of one station ringer.

‡ One circuit only.

§ See Table H.

¶ If only 513 KSU is used, connector selection begins with lowest number available.

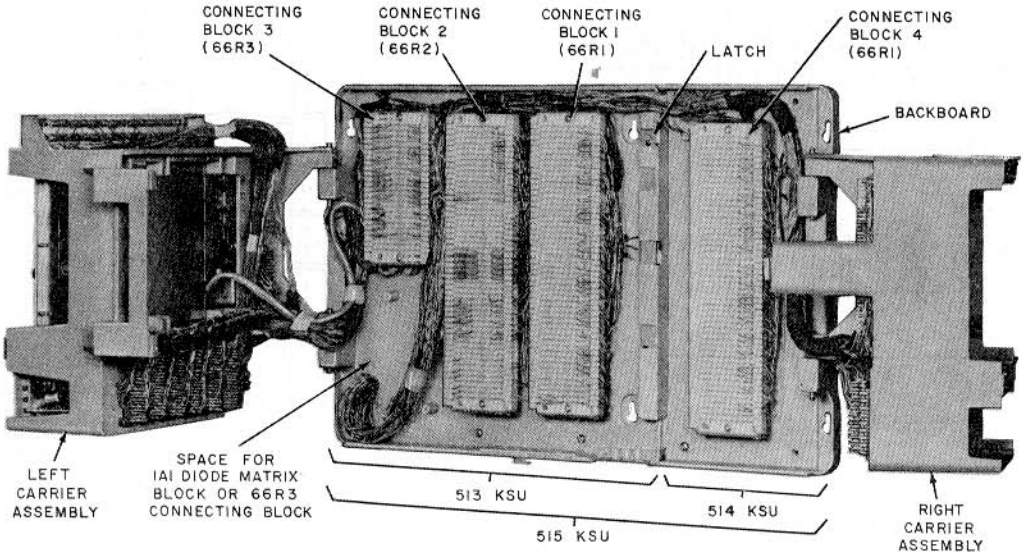

Fig. 2—515-Type Key Service Unit, Carrier Assemblies Open

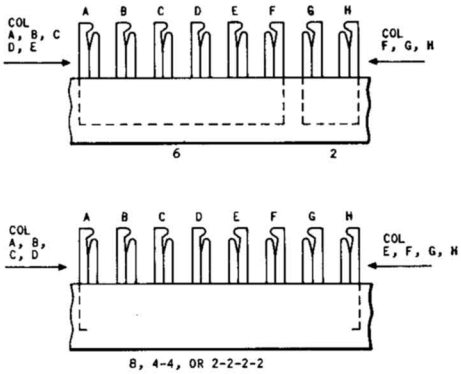

METHOD OF BRINGING IN CONDUCTORS FOR TERMINATION TO COLUMNS ON 66R1, 66R2 OR 66R3 CONNECTING BLOCK

66R1 CONNECTING BLOCK

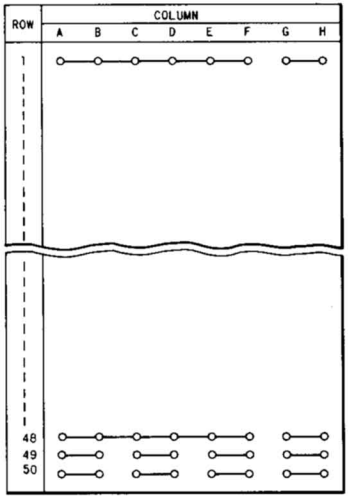

LAYOUT OF 66R1 CONNECTING BLOCK

66R2 CONNECTING BLOCK

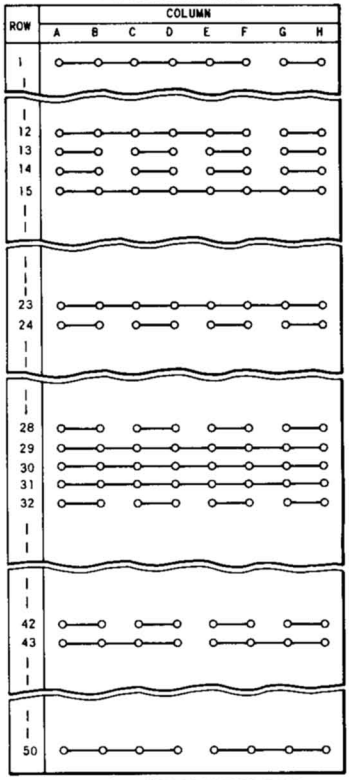

LAYOUT OF 66R2 CONNECTING BLOCK

66R3 CONNECTING BLOCK

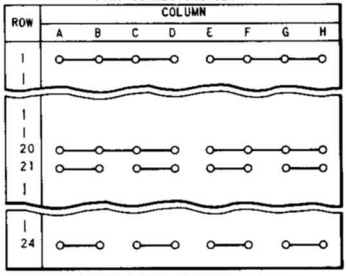

LAYOUT OF 66R3 CONNECTING BLOCK

Fig. 3—Layout of 66R1, 66R2, and 66R3 Connecting Blocks

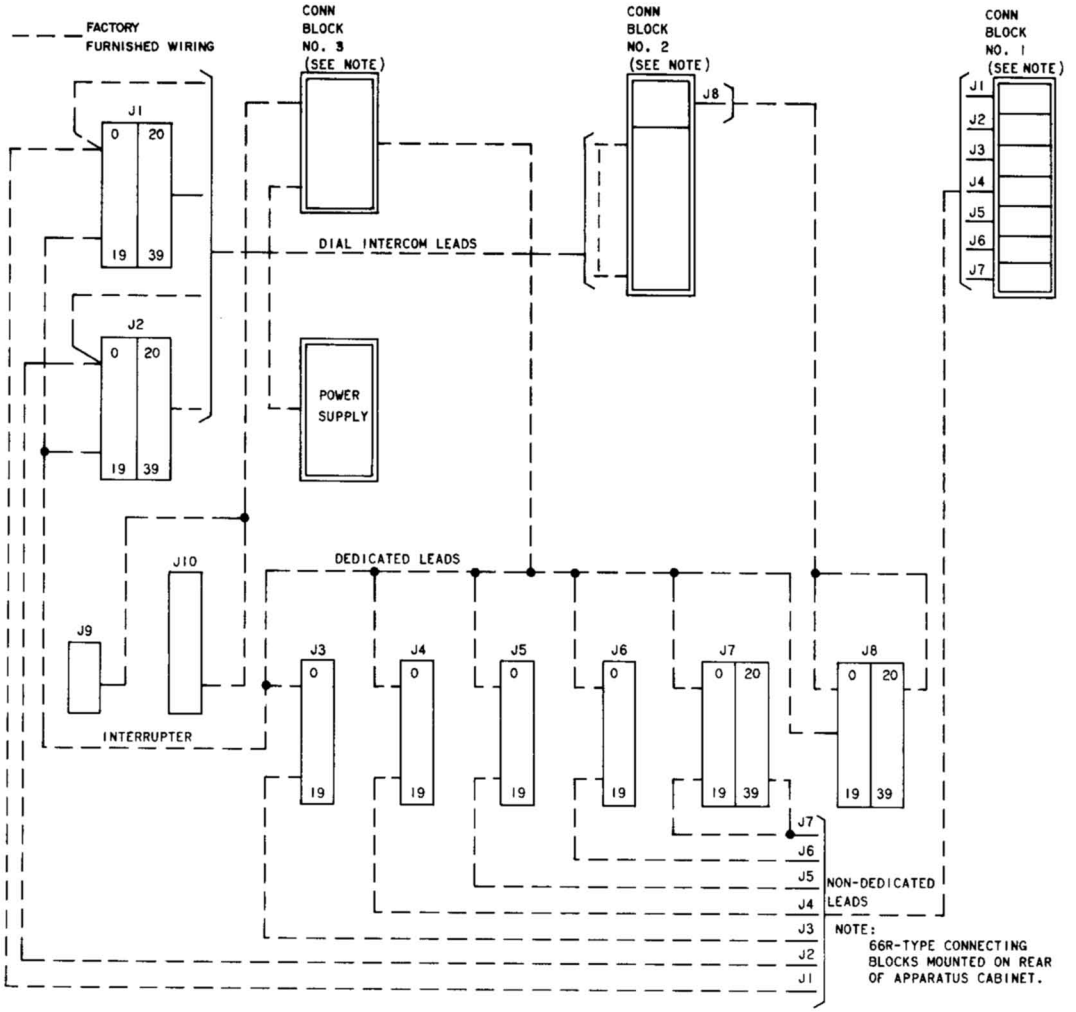

Fig. 4—513-Type Key Service Unit, General Wiring Plan

TABLE E
FUSING FOR 513-, 514-, AND 515-TYPE KSUs

DESIGNATION	FUSE AMP	CIRCUIT	POTENTIAL	CODE
F1	5	Lamp	10V AC	24F
F2				
F3	0.5	MB, MG, ST	10V AC or 24V DC	24E
F4	2	Lamp Wink	10V AC	24C
F5				
F6		Lamp Flash		
F7				
F8				
F9				
F10		Lamp Wink		
F11				
F12		Lamp Steady		
F13				
F14				
F15				

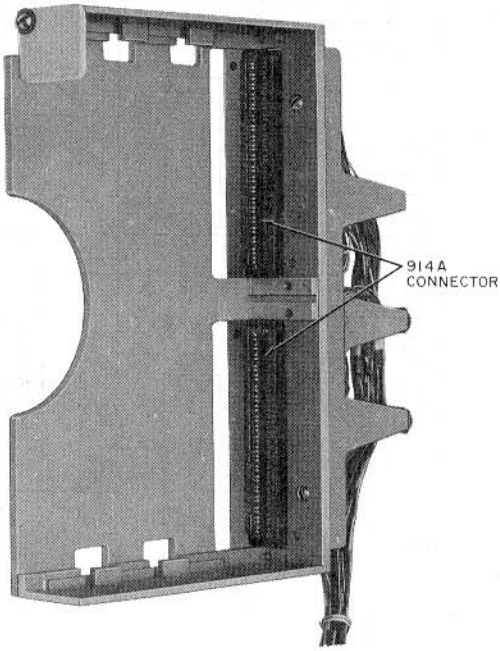

Fig. 5—69F Apparatus Mounting

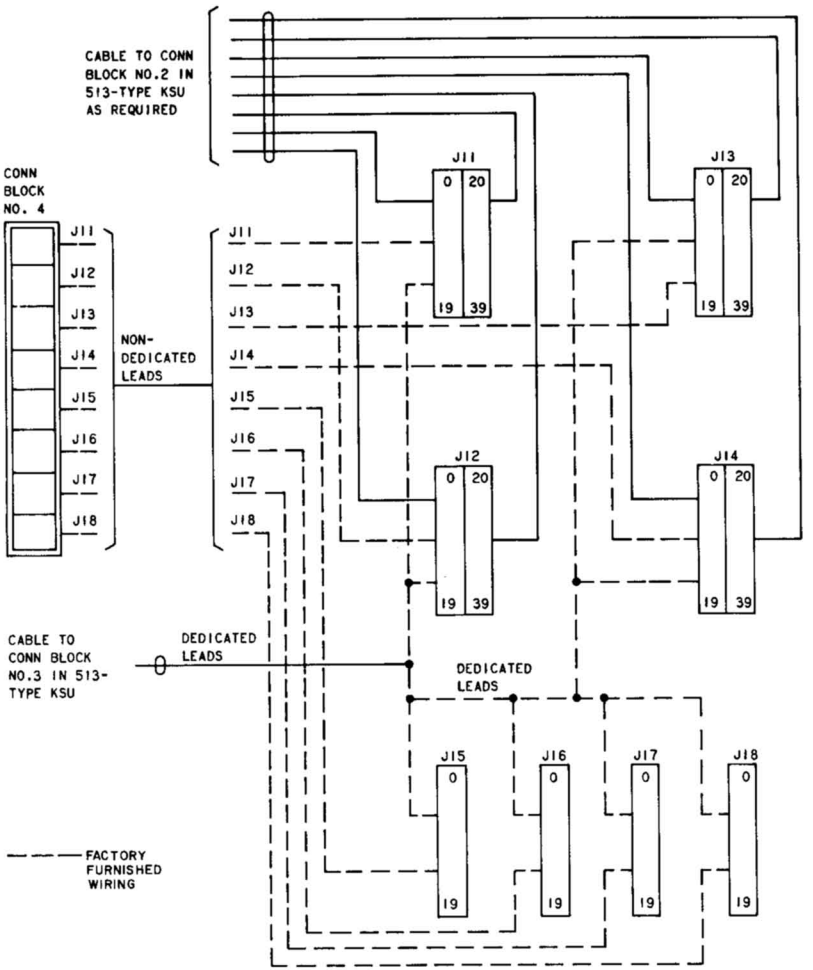

Fig. 6—514-Type Key Service Unit, General Wiring Plan

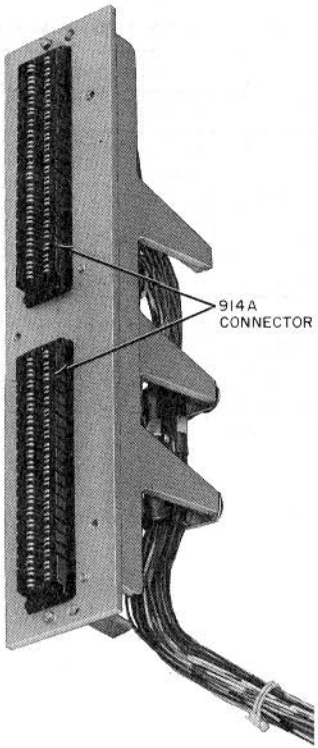

Fig. 7—69E Apparatus Mounting

TABLE F

CONNECTIONS REQUIRED FOR CONNECTING AN EXTERNAL POWER SUPPLY TO A 513- OR 515-TYPE KSU USING FURNISHED POWER CORD

POWER SUPPLY	LEAD DESIG	LEAD COLOR	WIRE GAUGE	CONN ON CONN BLK 3
10V GRD or GRD	MG	R-O	24	10C*
105V GRD or GRD	105V GRD or RG	BL-BK	22	11C*
SIG GRD	GRD B(1)	W-G	24	12D*
	GRD B(2)	R-G		13B*
TALK GRD	GRD A(1)	W-BL		14B*
	GRD A(2)	W-O		15B*
18V GRD	18V GRD	S-BK	22	16A*
10V GRD or GRD	LG1	W-BR	18	17C*
	LG2	W-S		19C*
10V AC or 10V AC INTER.	MB	O-R	24	10G†
105V 30 Hz	±105V	BL-R	22	11G†
B SIG	BAT B(1)	G-W	24	12G†
	BAT B(2)	G-R		13G†
A TALK	BAT A(1)	BL-W		14G†
	BAT A(2)	O-W		15G†
18V AC	±18V	S-R	22	16H†
10V AC	±10V(1)	BR	18	17G†
10V AC or 10V AC INTER.	±10V(2)	S		19G†

* Terminates on left side of connecting block.

† Terminates on right side of connecting block.

TABLE G

CONNECTIONS REQUIRED FOR ADDING 514-TYPE KSU TO A 513-TYPE KSU

LEAD DESIG	LEAD COLOR	BINDER COLOR	CONN ON CONN BLK 3
LF2	S-R	G*	3C
LS2	W-G	G*	4C
RN	BR-R	G*	9B
MG	G-R	G*	10B
GRD B(1)	R-O	G*	12C
GRD A(1)	R-BL	G*	14C
LW2	R-S	G†	3F
ST	R-G	G†	9G
±105V	R-BR	G†	11F
BAT B(1)	O-R	G†	12F
BAT A(1)	BL-R	G†	14F
LF4	S-R	Y*	7C
LS4	W-G	Y*	8C
GRD B(2)	R-O	Y*	13C
GRD A(2)	R-BL	Y*	15C
LW4	R-S	Y†	7F
BAT B(2)	O-R	Y†	13F
BAT A(2)	BL-R	Y†	15F
LF3	S-R	R*	5C
LS3	W-G	R*	6C
LW3	R-S	R†	5F
LF1	S-R	O*	1C
LS1	W-G	O*	2C
LW1	R-S	O†	1F
RG	G	‡	11B
A1	W	‡	13D
LG2	BL	‡	2F
LG1	O	‡	2G
LG4	S	‡	6F
LG3	BR	‡	6G

* Terminates on left side of connecting block.

† Terminates on right side of connecting block.

‡ Stored together in one bundle.

TABLE H

CONNECTIONS FOR AUDIBLE SIGNALING CIRCUITS

AUDIBLE SIGNALING CIRCUIT*	CONNECTING BLOCK 3	
	PLACE STRAPS	REMOVE LEADS
±10V Buzzer	17D to 11D 17E to 11E	From Terminals 11C and 11G (Insulate and Store
±18V Buzzer	16D to 11D 16E to 11E	
±105V Ringer	Factory Provided	

* If ±10V or ±18V is used for audible signaling: KTUs requiring ±105V private line services cannot be used in the 513 KSU. ±105V can be supplied to KTUs in the 514 KSU by moving the (R-BR) lead on terminal 11F of connecting block 3 to spare ±105V terminal.

TABLE I

OPTION CONNECTIONS FOR LAMP CIRCUITS

OPTION	INTERRUPTER	LAMP LOAD	LAMP FLASH		LAMP STEADY		LAMP WINK	
			ON CONNECTING BLOCK 3					
			PLACE STRAPS	REMOVE STRAPS *	PLACE STRAPS	REMOVE STRAPS *	PLACE STRAPS	REMOVE STRAPS *
Z	KS-19175,L1 ±10V Motor	1 to 100 Lamps	1B to 5B 3B to 7B 18D to 19D		2B to 6B 4B to 8B 18D to 19D		1G to 5G 3G to 7G 18D to 19D	
Y	KS-19385,L2 24V DC Motor							
X	KS-15900,L1 ±10V Motor	101 to 200 Lamps		1B to 5B 3B to 7B 18D to 19D		2B to 6B 4B to 8B 18D to 19D		1G to 5G 3G to 7G 18D to 19D
W	KS-19384,L2 24V DC Motor							

* If Z, Y straps are in place.

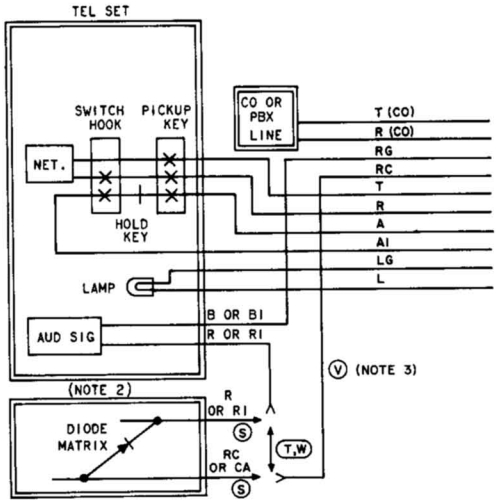

OPTION STRAPPING ON 400-TYPE KTU OPTION BLOCK (NOTE 1)

FEATURES			OPTION	STRAP TERMINALS	
				400D	400A, B AND C
AUDIBLE SIGNALS	INTERRUPTED RING		W	5 TO 8	5 TO 6
	STEADY RING		T	6 TO 8	4 TO 6
	COMMON WITH DIODE MATRIX CONTROL		S	5 TO 8	5 TO 6
VISUAL HOLD	LAMP WINK		Y	7 TO 10	8 TO 9
	LAMP STEADY		X	7 TO 9	7 TO 9
TIME-OUT CONTROL	SHORT TIME DELAY (10 SECONDS)		Z (NOTES 4 AND 5)	1 TO 2	1 TO 2
	LONG TIME DELAY		(NOTE 6)	(NOTE 6)	
DELAYED HOLD RELEASE	RELEASE OF HOLDING BRIDGE FROM CO OR PBX BY LINE CURRENT OPENS GREATER THAN	500 MILLISECONDS WHEN ASSOCIATED WITH NO. 1 ESS HAVING RESWITCH CAPABILITY * (USE 5 UF CAPACITOR, 601A OR EQUIVALENT). †(USE 1.62 UF CAPACITOR, 701G OR EQUIVALENT)	ZC (NOTE 7)	2 TO 3	
		50 MILLISECONDS WHEN ASSOCIATED WITH NO. 5 X-BAR CENTREX HAVING AUTOMATIC PERMANENT SIGNAL RELEASE * (USE 0.5 UF CAPACITOR, 575B OR EQUIVALENT) † (USE 0.162 UF CAPACITOR OR EQUIVALENT)	ZD (NOTE 8)	2 TO 3	

* WHEN USED WITH Z OPTION
† WHEN USED WITH LONG TIME DELAY

Fig. 8—Connections for 400A, B, C, or D (MD) KTU (CO/PBX Line Circuit) (Sheet 1 of 2)

ROW AND TERMINAL ASSIGNMENT FOR JACKS

CONNECTING BLOCK

	1							2	4							
	J1	J2	J3	J4	J5	J6	J7	J8	J11	J12	J13	J14	J15	J16	J17	J18
T (CO)	1G	7G	13G	19G	25G	31G	37G	1G	1G	7G	13G	19G	25G	31G	37G	43G
R (CO)	2G	8G	14G	20G	26G	32G	38G	2G	2G	8G	14G	20G	26G	32G	38G	44G
RG	5G	11G	17G	23G	29G	35G	41G	5G	5G	11G	17G	23G	29G	35G	41G	47G
RC	6G	12G	18G	24G	30G	36G	42G	6G	6G	12G	18G	24G	30G	36G	42G	48G
T	1A-E	7A-E	13A-E	19A-E	25A-E	31A-E	37A-E	1A-E	1A-E	7A-E	13A-E	19A-E	25A-E	31A-E	37A-E	43A-E
R	2A-E	8A-E	14A-E	20A-E	26A-E	32A-E	38A-E	2A-E	2A-E	8A-E	14A-E	20A-E	26A-E	32A-E	38A-E	44A-E
A	3A-E	9A-E	15A-E	21A-E	27A-E	33A-E	39A-E	3A-E	3A-E	9A-E	15A-E	21A-E	27A-E	33A-E	39A-E	45A-E
AI	4A-E	10A-E	16A-E	22A-E	28A-E	34A-E	40A-E	4A-E	4A-E	10A-E	16A-E	22A-E	28A-E	34A-E	40A-E	46A-E
LG	5A-E	11A-E	17A-E	23A-E	29A-E	35A-E	41A-E	5A-E	5A-E	11A-E	17A-E	23A-E	29A-E	35A-E	41A-E	47A-E
L	6A-E	12A-E	18A-E	24A-E	30A-E	36A-E	42A-E	6A-E	6A-E	12A-E	18A-E	24A-E	30A-E	36A-E	42A-E	48A-E

SHOWN FOR REFERENCE ONLY

TO 400-TYPE KTU: 14, 9, 1, 12, 13, 16, 8

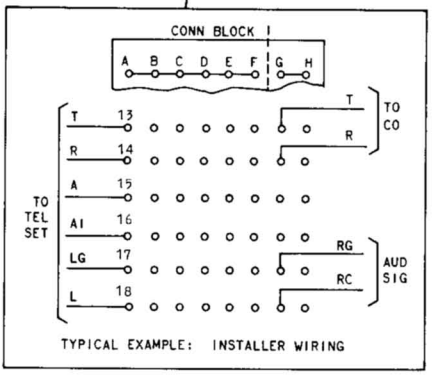

4. TO PROVIDE TIME-OUT CYCLES OF RING-UP CIRCUITS FROM 3.4 TO 7.5 SECONDS, REPLACE Z OPTION STRAP WITH A KS-13490,L1 OR EQUIVALENT (1 WATT) RESISTOR. USE ONE RESISTOR LEAD AS A STRAP BETWEEN TERMINALS 1 AND 2 AND CONNECT THE OTHER LEAD TO TERMINAL 3. USE TABLE BELOW FOR RESISTOR VALUE REQUIRED FOR DESIRED TIME-OUT INTERVAL.

TIME IN SEC FROM 10 SEC TO:	RESISTOR MEGOHM	EFFECT ON DELAYED HOLD RELEASE OPTIONS	
		ZC	ZJ
7.5	1.2	NONE	NONE
6.7	.75	NOT RECOMMENDED (NOTE 5)	
5.0	.39		
3.4	.20		

IF THE TIME-OUT CYCLE IS REDUCED IN CONJUNCTION WITH ZC OR ZJ OPTION, CONNECT THE RESISTOR AND CAPACITOR AS SHOWN BELOW:

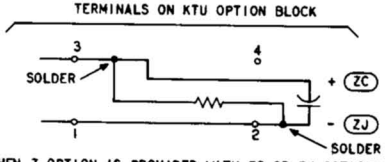

5. WHEN Z OPTION IS PROVIDED WITH ZC OR ZJ OPTIONS, REMOVE THE Z STRAP AND USE THE CAPACITOR LEAD AS A STRAP BETWEEN TERMINALS 1 AND 2.
6. FOR 30 SECOND TIME-OUT CYCLE, REMOVE Z OPTION STRAP BETWEEN TERMINALS 1 AND 2.
7. WHEN THE ZC OPTION IS USED DUE TO THE DELAYED RELEASE OF THE HOLDING BRIDGE, SOME TRANSMISSION LOSS IS ENCOUNTERED FOR APPROXIMATELY 1 SECOND WHEN A STATION REENTERS A HELD CALL.
8. ZD OPTION IS REPLACED BY ZJ OPTION, HOWEVER IT IS NOT NECESSARY TO UPDATE CIRCUITS PREVIOUSLY MODIFIED WITH OPTION ZD.

NOTES:

1. THE 400D KTU IS FACTORY WIRED FOR 10-SECOND TIMEOUT, PLUS WINKING-HOLD LAMP, AND W AND S WIRING OPTIONS.
2. DIODE MATRIX MUST BE FURNISHED LOCALLY.
3. (V) OPTION MAY BE USED IN LOCALLY ENGINEERED OR RELAY COMMON AUDIBLE ARRANGEMENTS.

Fig. 8—Connections for 400A, B, C, or D (MD) KTU (CO/PBX Line Circuit) (Sheet 2 of 2)

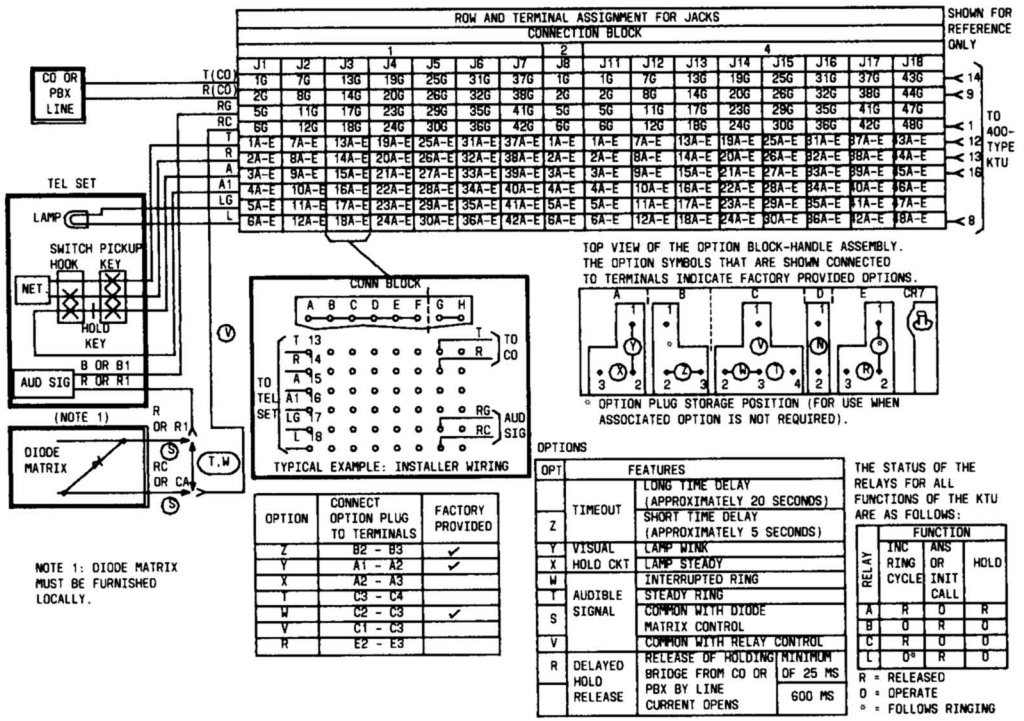

J1	J2	J3	J4	J5	J6	J7	J8	J11	J12	J13	J14	J15	J16	J17	J18
1G	7G	13G	19G	25G	31G	37G	1G	1G	7G	13G	19G	25G	31G	37G	43G
2G	8G	14G	20G	26G	32G	38G	2G	2G	8G	14G	20G	26G	32G	38G	44G
5G	11G	17G	23G	29G	35G	41G	5G	5G	11G	17G	23G	29G	35G	41G	47G
6G	12G	18G	24G	30G	36G	42G	6G	6G	12G	18G	24G	30G	36G	42G	48G
1A-E	7A-E	13A-E	19A-E	25A-E	31A-E	37A-E	1A-E	1A-E	7A-E	13A-E	19A-E	25A-E	31A-E	37A-E	43A-E
2A-E	8A-E	14A-E	20A-E	26A-E	32A-E	38A-E	2A-E	2A-E	8A-E	14A-E	20A-E	26A-E	32A-E	38A-E	44A-E
3A-E	9A-E	15A-E	21A-E	27A-E	33A-E	39A-E	3A-E	3A-E	9A-E	15A-E	21A-E	27A-E	33A-E	39A-E	45A-E
4A-E	10A-E	16A-E	22A-E	28A-E	34A-E	40A-E	4A-E	4A-E	10A-E	16A-E	22A-E	28A-E	34A-E	40A-E	46A-E
5A-E	11A-E	17A-E	23A-E	29A-E	35A-E	41A-E	5A-E	5A-E	11A-E	17A-E	23A-E	29A-E	35A-E	41A-E	47A-E
6A-E	12A-E	18A-E	24A-E	30A-E	36A-E	42A-E	6A-E	6A-E	12A-E	18A-E	24A-E	30A-E	36A-E	42A-E	48A-E

OPTION	CONNECT OPTION PLUG TO TERMINALS	FACTORY PROVIDED
Z	B2 - B3	✓
Y	A1 - A2	✓
X	A2 - A3	
T	C3 - C4	
W	C2 - C3	✓
V	C1 - C3	
R	E2 - E3	

OPTIONS

OPT	FEATURES		
Z	TIMEOUT	LONG TIME DELAY (APPROXIMATELY 20 SECONDS)	
		SHORT TIME DELAY (APPROXIMATELY 5 SECONDS)	
Y	VISUAL HOLD CKT	LAMP WINK	
X		LAMP STEADY	
W	AUDIBLE SIGNAL	INTERRUPTED RING	
T		STEADY RING	
S		COMMON WITH DIODE MATRIX CONTROL	
V		COMMON WITH RELAY CONTROL	
R	DELAYED HOLD RELEASE	RELEASE OF HOLDING BRIDGE FROM CO OR PBX BY LINE CURRENT OPENS	MINIMUM OF 25 MS
			600 MS

THE STATUS OF THE RELAYS FOR ALL FUNCTIONS OF THE KTU ARE AS FOLLOWS:

RELAY	FUNCTION		
	INC RING CYCLE	ANS OR INIT CALL	HOLD
A	R	O	R
B	O	R	O
C	R	O	O
L	O*	R	O

R = RELEASED
O = OPERATE
* = FOLLOWS RINGING

Fig. 9—Connections for 400G (MD) KTU (CO/PBX Line Circuit)

NOTES:
1. DIODE MATRIX MUST BE FURNISHED LOCALLY.
2. RING TIMEOUT IS NOT ADJUSTABLE OCCURS IN 5 TO 8-1/2 SECONDS.
3. INSTALLER PROVIDED EXTERNAL PORTION OF OPTIONS.

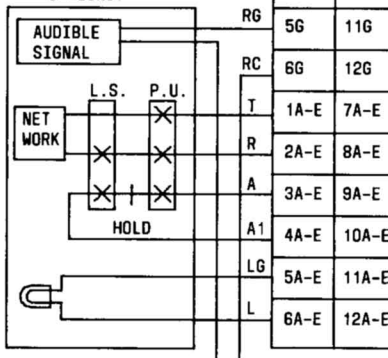

ROW AND TERMINAL ASSIGNMENT FOR JACKS															
CONNECTION BLOCK															
1							2	4							
J1	J2	J3	J4	J5	J6	J7	J8	J11	J12	J13	J14	J15	J16	J17	J18
1G	7G	13G	19G	25G	31G	37G	1G	1G	7G	13G	19G	25G	31G	37G	43G
2G	8G	14G	20G	26G	32G	38G	2G	2G	8G	14G	20G	26G	32G	38G	44G
5G	11G	17G	23G	29G	35G	41G	5G	5G	11G	17G	23G	29G	35G	41G	47G
6G	12G	18G	24G	30G	36G	42G	6G	6G	12G	18G	24G	30G	36G	42G	48G
1A-E	7A-E	13A-E	19A-E	25A-E	31A-E	37A-E	1A-E	1A-E	7A-E	13A-E	19A-E	25A-E	31A-E	37A-E	43A-E
2A-E	8A-E	14A-E	20A-E	26A-E	32A-E	38A-E	2A-E	2A-E	8A-E	14A-E	20A-E	26A-E	32A-E	38A-E	44A-E
3A-E	9A-E	15A-E	21A-E	27A-E	33A-E	39A-E	3A-E	3A-E	9A-E	15A-E	21A-E	27A-E	33A-E	39A-E	45A-E
4A-E	10A-E	16A-E	22A-E	28A-E	34A-E	40A-E	4A-E	4A-E	10A-E	16A-E	22A-E	28A-E	34A-E	40A-E	46A-E
5A-E	11A-E	17A-E	23A-E	29A-E	35A-E	41A-E	5A-E	5A-E	11A-E	17A-E	23A-E	29A-E	35A-E	41A-E	47A-E
6A-E	12A-E	18A-E	24A-E	30A-E	36A-E	42A-E	6A-E	6A-E	12A-E	18A-E	24A-E	30A-E	36A-E	42A-E	48A-E

SHOWN FOR REFERENCE ONLY

TO 400H TYPE KTU: 14, 9, 1, 12, 13, 16, 8

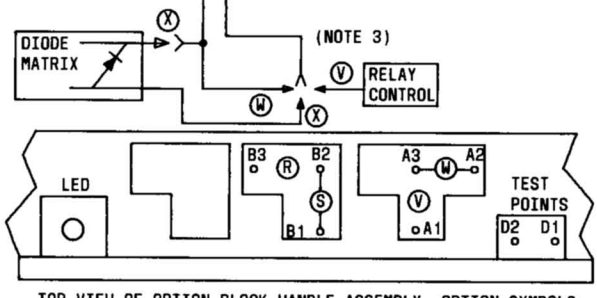

TOP VIEW OF OPTION BLOCK-HANDLE ASSEMBLY. OPTION SYMBOLS SHOWN CONNECTED ARE FACTORY INSTALLED OPTIONS

OPTION	FEATURE	PLUG POSITION
W	INTERRUPTED RING	A2-A3*
V	COMMON AUDIBLE WITH RELAY CONTROL	A1-A3
X	COMMON AUDIBLE WITH DIODE MATRIX	A2-A3*
S	LONG HOLD R'LSE #1 ESS, #2 ESS, 812, 770, DIMENSION PBX	B1-B2*
R	SHORT HOLD R'LSE ALL OTHERS	B2-B3

* FACTORY PROVIDED

Fig. 10—Connections for 400H KTU (CO/PBX Line Circuit)

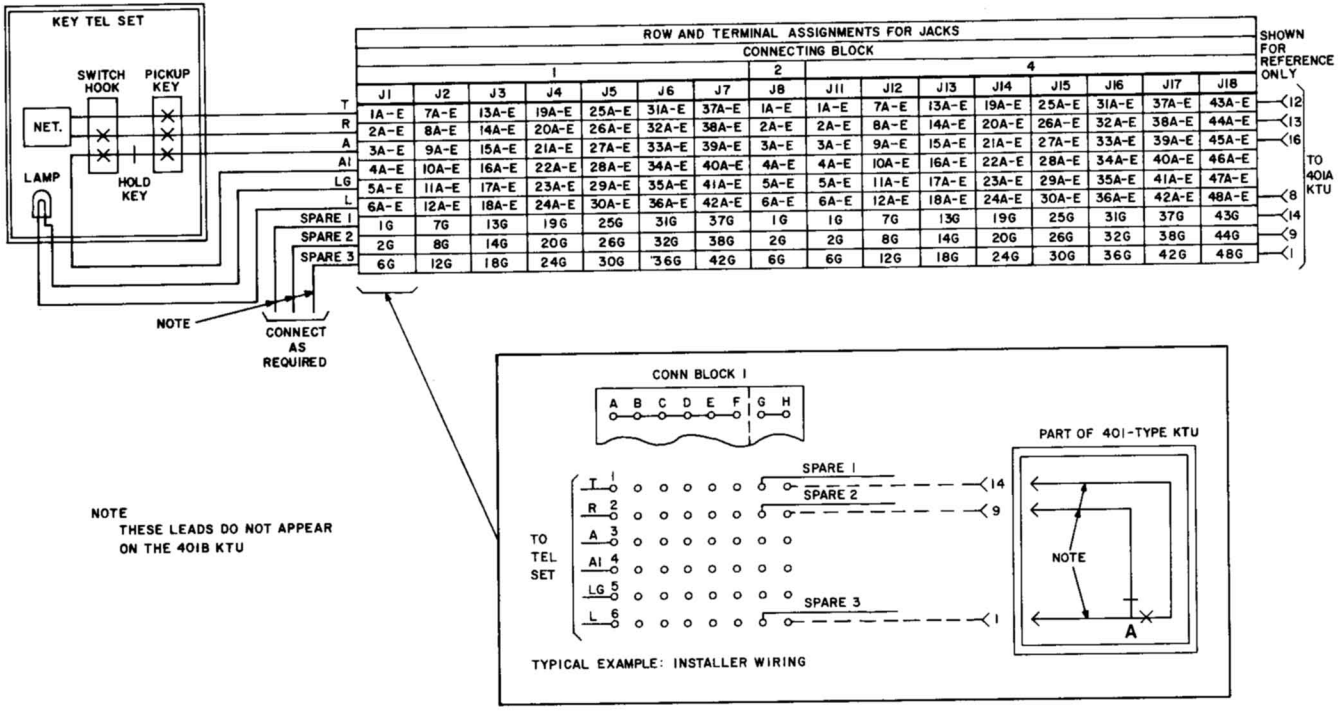

Fig. 11—Connections for 401A KTU (Manual Intercom Circuit)

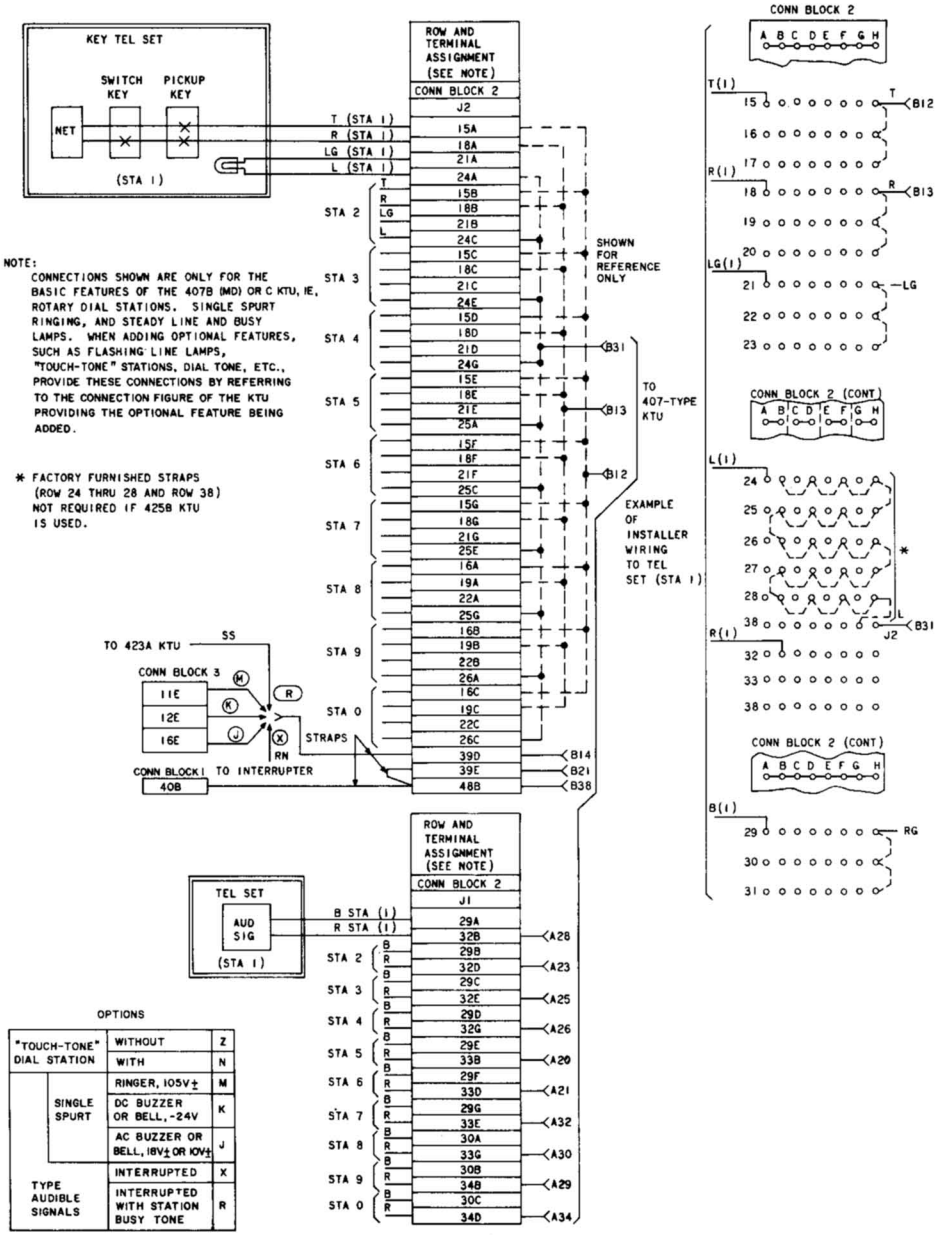

OPTIONS

"TOUCH-TONE" DIAL STATION		WITHOUT	Z
		WITH	N
TYPE AUDIBLE SIGNALS	SINGLE SPURT	RINGER, 105V±	M
		DC BUZZER OR BELL, -24V	K
		AC BUZZER OR BELL, 18V± OR 10V±	J
		INTERRUPTED	X
		INTERRUPTED WITH STATION BUSY TONE	R

Fig. 12—Connections for 407B (MD) or 407C KTU (Dial Intercom, 10-Code Selector Circuit)

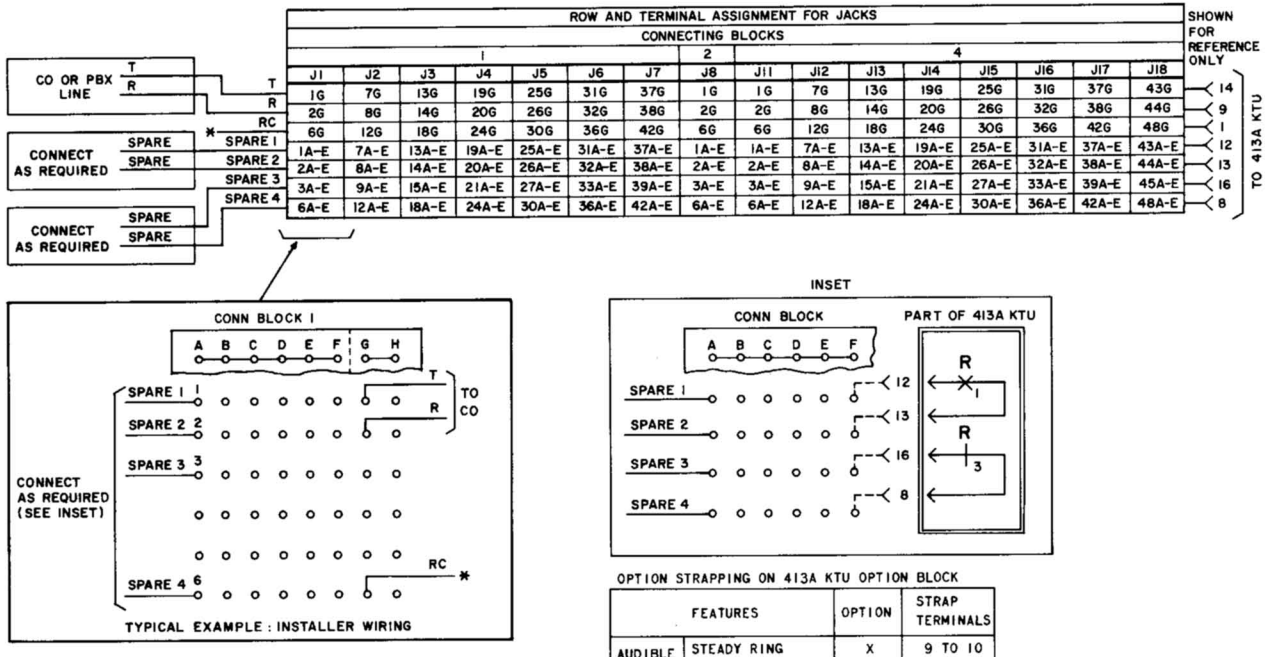

FEATURES		OPTION	STRAP TERMINALS
AUDIBLE SIGNALS	STEADY RING	X	9 TO 10
	INTERRUPTED RING	Z	8 TO 10

* TO RINGER, RELAY, ETC, OR AS REQUIRED.

Fig. 13—Connections for 413A KTU (Auxiliary Ringup Circuit)

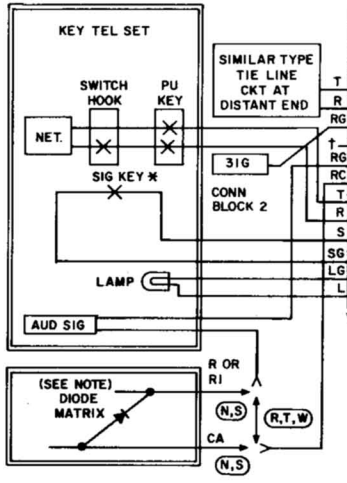

ROW AND TERMINAL ASSIGNMENT FOR JACKS															
CONNECTING BLOCKS															
1							2	4							
J1	J2	J3	J4	J5	J6	J7	J8	J11	J12	J13	J14	J15	J16	J17	J18
1G	7G	13G	19G	25G	31G	37G	1G	1G	7G	13G	19G	25G	31G	37G	43G
2G	8G	14G	20G	26G	32G	38G	2G	2G	8G	14G	20G	26G	32G	38G	44G
3G	9G	15G	21G	27G	33G	39G	3G	3G	9G	15G	21G	27G	33G	39G	45G
4G	10G	16G	22G	28G	34G	40G	4G	4G	10G	16G	22G	28G	34G	40G	46G
5G	11G	17G	23G	29G	35G	41G	5G	5G	11G	17G	23G	29G	35G	41G	47G
6G	12G	18G	24G	30G	36G	42G	6G	6G	12G	18G	24G	30G	36G	42G	48G
1A-E	7A-E	13A-E	19A-E	25A-E	31A-E	37A-E	1A-E	1A-E	7A-E	13A-E	19A-E	25A-E	31A-E	37A-E	43A-E
2A-E	8A-E	14A-E	20A-E	26A-E	32A-E	38A-E	2A-E	2A-E	8A-E	14A-E	20A-E	26A-E	32A-E	38A-E	44A-E
3A-E	9A-E	15A-E	21A-E	27A-E	33A-E	39A-E	3A-E	3A-E	9A-E	15A-E	21A-E	27A-E	33A-E	39A-E	45A-E
4A-E	10A-E	16A-E	22A-E	28A-E	34A-E	40A-E	4A-E	4A-E	10A-E	16A-E	22A-E	28A-E	34A-E	40A-E	46A-E
5A-E	11A-E	17A-E	23A-E	29A-E	35A-E	41A-E	5A-E	5A-E	11A-E	17A-E	23A-E	29A-E	35A-E	41A-E	47A-E
6A-E	12A-E	18A-E	24A-E	30A-E	36A-E	42A-E	6A-E	6A-E	12A-E	18A-E	24A-E	30A-E	36A-E	42A-E	48A-E

SHOWN FOR REFERENCE ONLY

14, 9, 0, 19, 1, 12, 13, 16, 8 — TO 414A KTU

NOTE:
DIODE MATRIX MUST BE FURNISHED LOCALLY.
* SIGNAL KEY MAY BE A CONVERTED PICKUP KEY OR ANY EXTERNAL NONLOCKING KEY.
† SPARE A RELAY CONTACT (FOR CONTROL PURPOSES AS DESIRED).

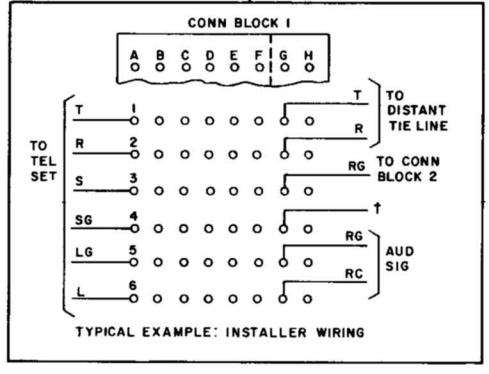

OPTION STRAPPING ON 414A KTU OPTION BLOCK

FEATURES			OPTION	STRAP TERMINALS
AUDIBLE SIGNALS	UNDER CONTROL OF TIME-OUT CIRCUIT (B RELAY)	INTERRUPTED RING	W	7 TO 8
		STEADY RING	T	6 TO 7
		COMMON WITH DIODE MATRIX CONTROL	S	7 TO 8
	UNDER CONTROL OF R RELAY	STEADY RING	R	4 TO 6
		COMMON WITH DIODE MATRIX CONTROL	N	
TIME-OUT	10 SECONDS		X	1 TO 2
	16 SECONDS		Z	2 TO 3
	23 SECONDS		WITHOUT X OR X	REMOVE X OR Z STRAPS
AUDIBLE RINGBACK TONE			M	9 TO 10

Fig. 14—Connections for 414A KTU (Manual Signaling, Ringdown Private Line Circuit)

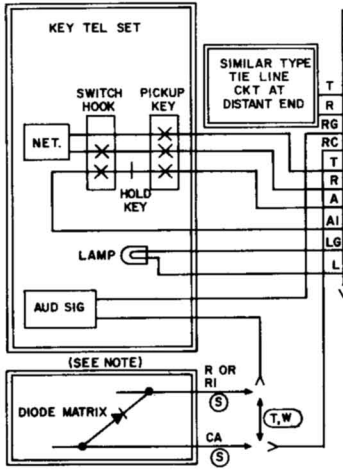

NOTE:
DIODE MATRIX MUST BE FURNISHED LOCALLY.

*-FOR IDLE LINE TERMINATION CONNECT A KS-13490,L1 910 OHM RESISTOR IN SERIES WITH A 542F, 2 UF CAPACITOR ACROSS TERMINALS 9 AND 10. ORDER COMPONENTS LOCALLY AND INSTALL.
†-FACTORY STRAPPED ON KTU.

ROW AND TERMINAL ASSIGNMENT FOR JACKS

CONNECTING BLOCK 1							CONNECTING BLOCK 2	CONNECTING BLOCK 4							
J1	J2	J3	J4	J5	J6	J7	J8	J11	J12	J13	J14	J15	J16	J17	J18
1G	7G	13G	19G	25G	31G	37G	1G	1G	7G	13G	19G	25G	31G	37G	43G
2G	8G	14G	20G	26G	32G	38G	2G	2G	8G	14G	20G	26G	32G	38G	44G
5G	11G	17G	23G	29G	35G	41G	5G	5G	11G	17G	23G	29G	35G	41G	47G
6G	12G	18G	24G	30G	36G	42G	6G	6G	12G	18G	24G	30G	36G	42G	48G
1A-E	7A-E	13A-E	19A-E	25A-E	31A-E	37A-E	1A-E	1A-E	7A-E	13A-E	19A-E	25A-E	31A-E	37A-E	43A-E
2A-E	8A-E	14A-E	20A-E	26A-E	32A-E	38A-E	2A-E	2A-E	8A-E	14A-E	20A-E	26A-E	32A-E	38A-E	44A-E
3A-E	9A-E	15A-E	21A-E	27A-E	33A-E	39A-E	3A-E	3A-E	9A-E	15A-E	21A-E	27A-E	33A-E	39A-E	45A-E
4A-E	10A-E	16A-E	22A-E	28A-E	34A-E	40A-E	4A-E	4A-E	10A-E	16A-E	22A-E	28A-E	34A-E	40A-E	46A-E
5A-E	11A-E	17A-E	23A-E	29A-E	35A-E	41A-E	5A-E	5A-E	11A-E	17A-E	23A-E	29A-E	35A-E	41A-E	47A-E
6A-E	12A-E	18A-E	24A-E	30A-E	36A-E	42A-E	6A-E	6A-E	12A-E	18A-E	24A-E	30A-E	36A-E	42A-E	48A-E

SHOWN FOR REFERENCE ONLY: 14, 9, 1, 12, 13, 16, 8 — TO 415A KTU

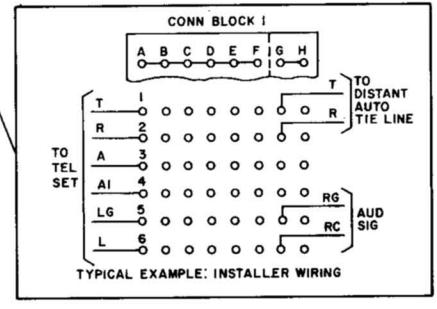

OPTION STRAPPING ON 415A KTU OPTION BLK *

FEATURES		OPTION	STRAP TERMINALS
AUDIBLE SIGNALS	INTERUUPTED RING	W†	4 TO 6
	STEADY RING	T	5 TO 6
	COMMON WITH DIODE MATRIX CONTROL	S†	4 TO 6
AUDIBLE RINGBACK TONE		M†	1 TO 2
VISUAL HOLD SIGNAL		Y†	7 TO 8

Fig. 15—Connections for 415A KTU (Automatic, DC Signaling, Private Line Circuit)

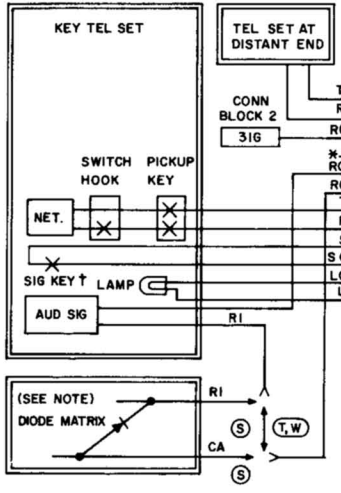

ROW AND TERMINAL ASSIGNMENT FOR JACKS — CONNECTING BLOCK 1							2	4								SHOWN FOR REFERENCE ONLY
J1	J2	J3	J4	J5	J6	J7	J8	J11	J12	J13	J14	J15	J16	J17	J18	
1G	7G	13G	19G	25G	31G	37G	1G	1G	7G	13G	19G	25G	31G	37G	43G	14
2G	8G	14G	20G	26G	32G	38G	2G	2G	8G	14G	20G	26G	32G	38G	44G	9
3G	9G	15G	21G	27G	33G	39G	3G	3G	9G	15G	21G	27G	33G	39G	45G	0
4G	10G	16G	22G	28G	34G	40G	4G	4G	10G	16G	22G	28G	34G	40G	46G	19
5G	11G	17G	23G	29G	35G	41G	5G	5G	11G	17G	23G	29G	35G	41G	47G	TO 416A KTU
6G	12G	18G	24G	30G	36G	42G	6G	6G	12G	18G	24G	30G	36G	42G	48G	1
1A-E	7A-E	13A-E	19A-E	25A-E	31A-E	37A-E	1A-E	1A-E	7A-E	13A-E	19A-E	25A-E	31A-E	37A-E	43A-E	12
2A-E	8A-E	14A-E	20A-E	26A-E	32A-E	38A-E	2A-E	2A-E	8A-E	14A-E	20A-E	26A-E	32A-E	38A-E	44A-E	13
3A-E	9A-E	15A-E	21A-E	27A-E	33A-E	39A-E	3A-E	3A-E	9A-E	15A-E	21A-E	27A-E	33A-E	39A-E	45A-E	16
4A-E	10A-E	16A-E	22A-E	28A-E	34A-E	40A-E	4A-E	4A-E	10A-E	16A-E	22A-E	28A-E	34A-E	40A-E	46A-E	
5A-E	11A-E	17A-E	23A-E	29A-E	35A-E	41A-E	5A-E	5A-E	11A-E	17A-E	23A-E	29A-E	35A-E	41A-E	47A-E	
6A-E	12A-E	18A-E	24A-E	30A-E	36A-E	42A-E	6A-E	6A-E	12A-E	18A-E	24A-E	30A-E	36A-E	42A-E	48A-E	8

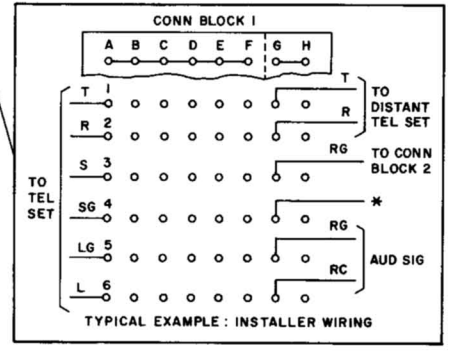

OPTION STRAPPING ON 416A KTU OPTION BLOCK

FEATURES		OPTION	STRAP TERMINALS
AUDIBLE SIGNALS	INTERRUPTED RING	W	5 TO 8
	STEADY RING	T	7 TO 8
	COMMON WITH DIODE MATRIX CONTROL	S	5 TO 8
AUDIBLE RINGBACK TONE		M	9 TO 10

NOTE:
DIODE MATRIX MUST BE FURNISHED LOCALLY.
* SPARE CONTACT FOR CONTROL PURPOSES AS DESIRED.
† SIGNAL KEY MAY BE A CONVERTED PICKUP KEY OR ANY EXTERNAL NONLOCKING KEY.

Fig. 16—Connections for 416A KTU (Station Line Circuit)

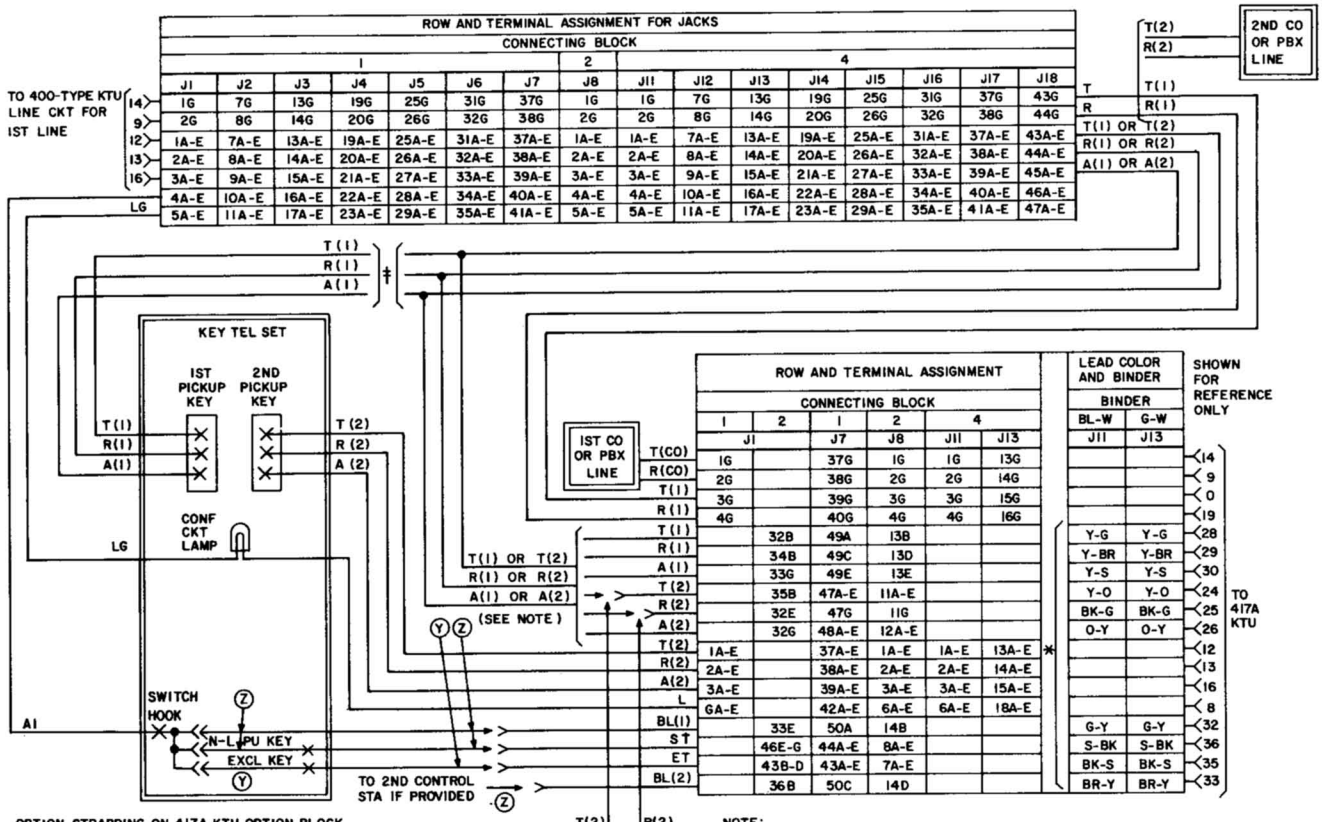

OPTION STRAPPING ON 417A KTU OPTION BLOCK

FEATURES		OPTION	STRAP TERMINALS
ONE STATION	CONTROLLED BY NONLOCKING KEY	X	6 TO 10
TWO STATIONS		W §	4 TO 6, 8 TO 10
CONTROLLED BY EXCLUSION KEY		Y	3 TO 5
CONTROLLED BY NONLOCKING KEY		Z	1 TO 2

§-INSTALL KS-21765, L1 DIODES OR EQUIVALENT (PROCURE LOCALLY) BETWEEN TERMINALS AS SHOWN.

NOTE:

CONNECT T, R, AND A LEADS OF CO OR PBX LINE TO 400-TYPE KTU AS REQUIRED FOR ADD-ON CONFERENCING BETWEEN
(1) 2 CO LINES
(2) TWO PBX LINES
(3) A CO OR PBX LINE (A LEAD REQUIRED) AND A DIAL INTERCOM LINE

* LEADS FROM J11 AND J13 NOT FACTORY TERMINATED TO CONNECTING BLOCKS. CONNECT TO SELECTED SPARE TERMINALS AS REQUIRED.

† SIGNAL KEY MAY BE A CONVERTED PICKUP KEY OR ANY EXTERNAL NONLOCKING KEY.

‡ BRIDGE TO APPROPRIATE CONN BLOCK TERMINALS FOR 1 ST LINE.

Fig. 17—Connections for 417A KTU (Add-on Conference Circuit)

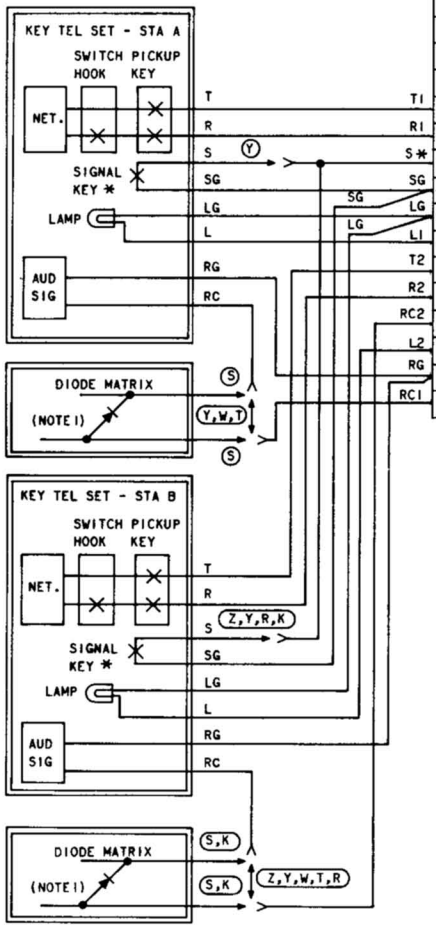

ROW AND TERMINAL ASSIGNMENT FOR JACKS															
CONNECTING BLOCKS															
1							2	4							
J1	J2	J3	J4	J5	J6	J7	J8	J11	J12	J13	J14	J15	J16	J17	J18
1A-E	7A-E	13A-E	19A-E	25A-E	31A-E	37A-E	1A-E	1A-E	7A-E	13A-E	19A-E	25A-E	31A-E	37A-E	43A-E
2A-E	8A-E	14A-E	20A-E	26A-E	32A-E	38A-E	2A-E	2A-E	8A-E	14A-E	20A-E	26A-E	32A-E	38A-E	44A-E
3A-E	9A-E	15A-E	21A-E	27A-E	33A-E	39A-E	3A-E	3A-E	9A-E	15A-E	21A-E	27A-E	33A-E	39A-E	45A-E
4A-E	10A-E	16A-E	22A-E	28A-E	34A-E	40A-E	4A-E	4A-E	10A-E	16A-E	22A-E	28A-E	34A-E	40A-E	46A-E
5A-E	11A-E	17A-E	23A-E	29A-E	35A-E	41A-E	5A-E	5A-E	11A-E	17A-E	23A-E	29A-E	35A-E	41A-E	47A-E
6A-E	12A-E	18A-E	24A-E	30A-E	36A-E	42A-E	6A-E	6A-E	12A-E	18A-E	24A-E	30A-E	36A-E	42A-E	48A-E
1G	7G	13G	19G	25G	31G	37G	1G	1G	7G	13G	19G	25G	31G	37G	43G
2G	8G	14G	20G	26G	32G	38G	2G	2G	8G	14G	20G	26G	32G	38G	44G
3G	9G	15G	21G	27G	33G	39G	3G	3G	9G	15G	21G	27G	33G	39G	45G
4G	10G	16G	22G	28G	34G	40G	4G	4G	10G	16G	22G	28G	34G	40G	46G
5G	11G	17G	23G	29G	35G	41G	5G	5G	11G	17G	23G	29G	35G	41G	47G
6G	12G	18G	24G	30G	36G	42G	6G	6G	12G	18G	24G	30G	36G	42G	48G

T1 R1 S* SG LG L1 T2 R2 RC2 L2 RG RC1

SHOWN FOR REFERENCE ONLY: 12, 13, 16, 8, 14, 9, 0, 19, 1 — TO 418A KTU

NOTES:
1. DIODE MATRIX MUST BE FURNISHED LOCALLY.
2. THESE OPTIONS APPLY TO THE SIGNAL KEY AND AUDIBLE SIGNAL AT STA "B" ONLY. THE AUDIBLE SIGNAL AT STA "A" IS UNDER CONTROL OF RELAY "S". THE AUDIBLE SIGNAL AT STA "A" MAY BE PART OF A COMMON AUDIBLE ARRANGEMENT PROVIDED THE DIODE MATRIX IS USED FOR CONTROL.
3. THE AUDIBLE SIGNALS AT STA "A" AND "B" MAY BE PART OF A COMM AUD ARRANGEMENT PROVIDED THE DIODE MATRIX IS USED FOR CONTROL.

OPTION STRAPPING ON 418A KTU OPTION BLOCK

FEATURES			OPTION	STRAP TERMINAL
AUDIBLE SIGNALS	TWO-WAY AUTOMATIC	INTERRUPTED RING	W	2 TO 3 TO 4 †
		STEADY RING	T	1 TO 2 TO 4 †
		COMMON WITH DIODE MATRIX CONTROL	S	2 TO 3 TO 4 †
	ONE-WAY AUTOMATIC, ONE-WAY MANUAL (NOTE 2)	INTERRUPTED RING	R	3 TO 4
		STEADY RING	Z	1 TO 4
		COMMON WITH DIODE MATRIX CONTROL	K	3 TO 4
	TWO-WAY MANUAL (NOTE 3)		Y	
AUDIBLE RING-BACK	TWO-WAY AUTOMATIC		Q	9 TO 10, 5 TO 7 TO 8†
	ONE-WAY AUTOMATIC, ONE-WAY MANUAL		H	5 TO 7, 9 TO 10
	TWO-WAY MANUAL		M	9 TO 10

* SIGNAL KEY MAY BE A CONVERTED PICKUP KEY OR ANY EXTERNAL NONLOCKING KEY.

† USE CONTINUOUS METHOD OF STRAPPING.

Fig. 18—Connections for 418A KTU (Short Range, DC Signaling, Private Line Circuit)

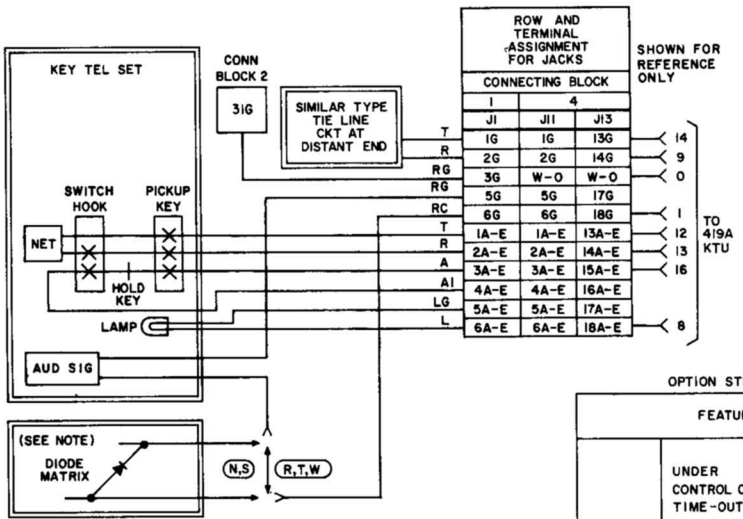

NOTE:
DIODE MATRIX MUST BE FURNISHED LOCALLY.

OPTION STRAPPING ON 419A KTU OPTION BLOCK

FEATURES			OPTION	STRAP TERMINALS
AUDIBLE SIGNALS	UNDER CONTROL OF TIME-OUT CIRCUIT (B RELAY)	INTERRUPTED RING	W	6 TO 8
		STEADY RING	T	5 TO 6
		COMMON WITH DIODE MATRIX CONTROL	S	6 TO 8
	UNDER CONTROL OF R RELAY	STEADY RING	R	3 TO 5
		COMMON WITH DIODE MATRIX CONTROL	N	
TIME-OUT	6 SECONDS		X	9 TO 10
	17 SECONDS		Z	7 TO 10
	25 SECONDS		WITHOUT X OR Z	REMOVE X OR Z STRAPS
AUDIBLE RINGBACK TONE			M	1 TO 2

Fig. 19—Connections for 419A KTU (Automatic Signaling, Ringdown Private Line Circuit)

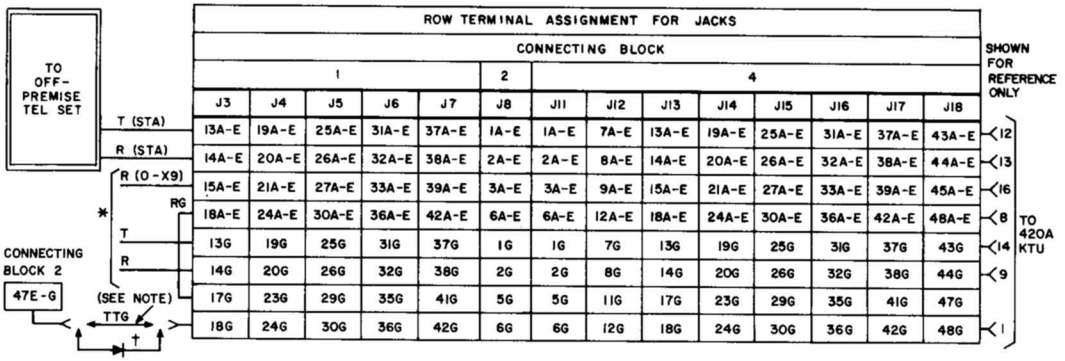

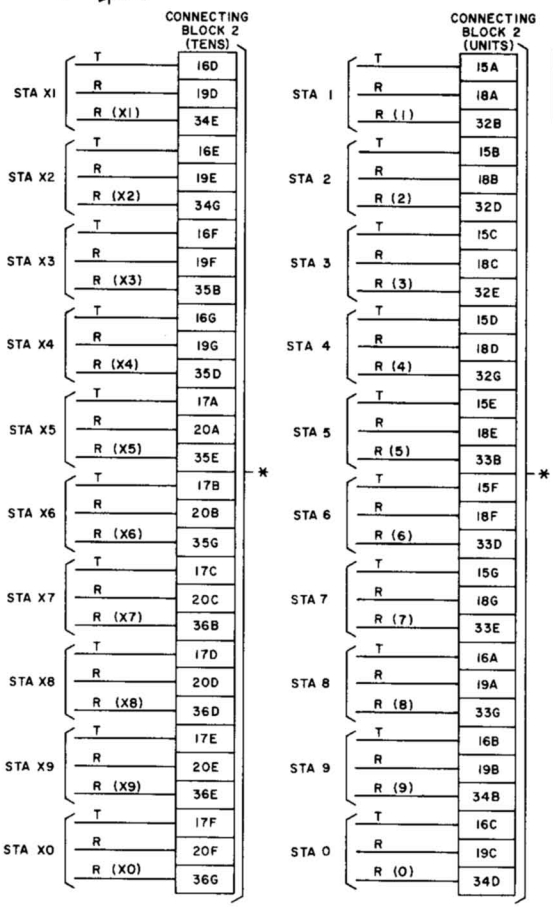

OPTION STRAPPING ON 420A KTU OPTION BLOCK

FEATURE		OPTION	STRAP TERMINALS
AUDIBLE SIGNALS	AC BUZZER, ±18V OR ±10V	J	1 TO 4, 7 TO 8
	DC BUZZER, 24V DC	K	
	RINGER, ±105V STEADY	M	2 TO 4, 7 TO 8

NOTE:

WHEN MORE THAN ONE 420A KTU IS USED, THE TTG CONNECTIONS MUST BE MULTIPLED USING A CONTINUOUS STRAP.

EXAMPLE:

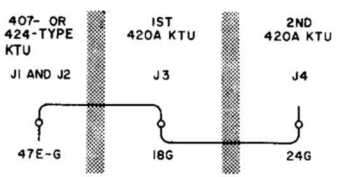

* TO ASSIGNED STATION OF DIAL INTERCOM (ANY DIGIT MAY BE ASSIGNED TO AN OFF-PREMISE STATION)

† WHEN INTERCOMMUNICATING SYSTEM IS EQUIPPED WITH THE "TOUCH-TONE" ADAPTER (426A AND 427B, SERIES 4, OR C KTUS) PROVIDE A 400J DIODE FOR EACH 420A KTU INSTALLED.

Fig. 20—Connections for 420A KTU (Dial Intercom, Long Line Circuit)

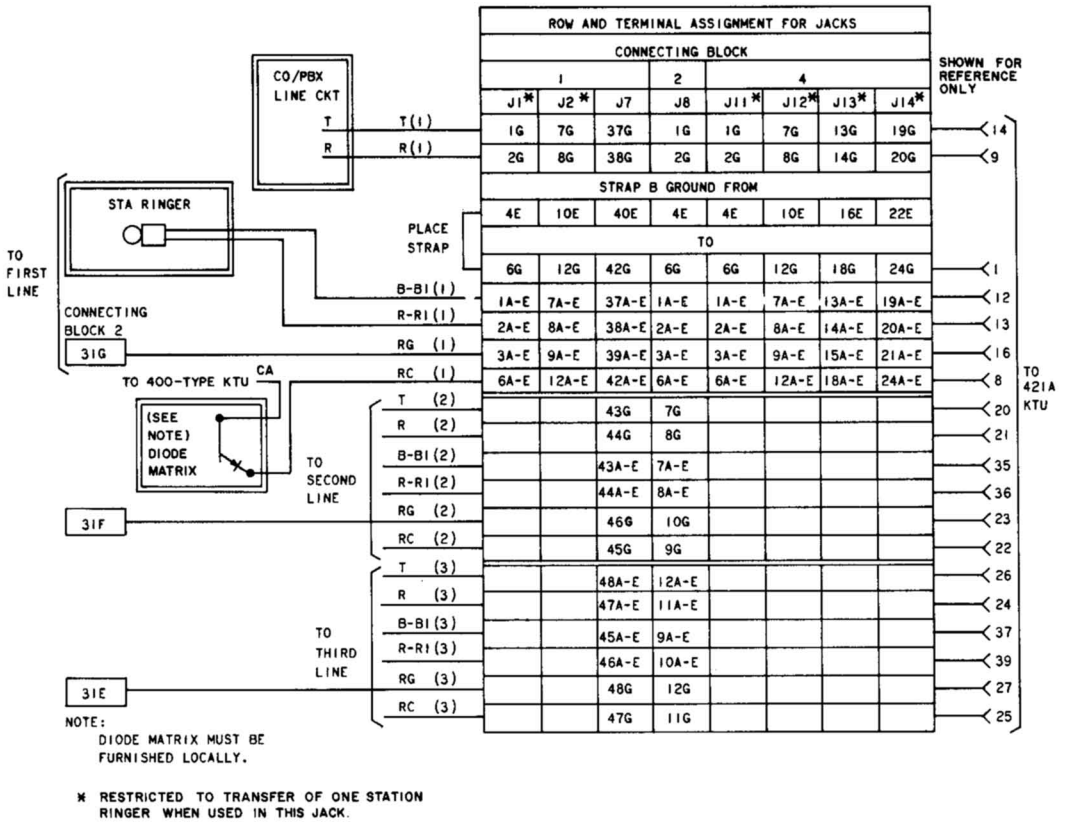

Fig. 21—Connections for 421A KTU (Power Failure Transfer Circuit)

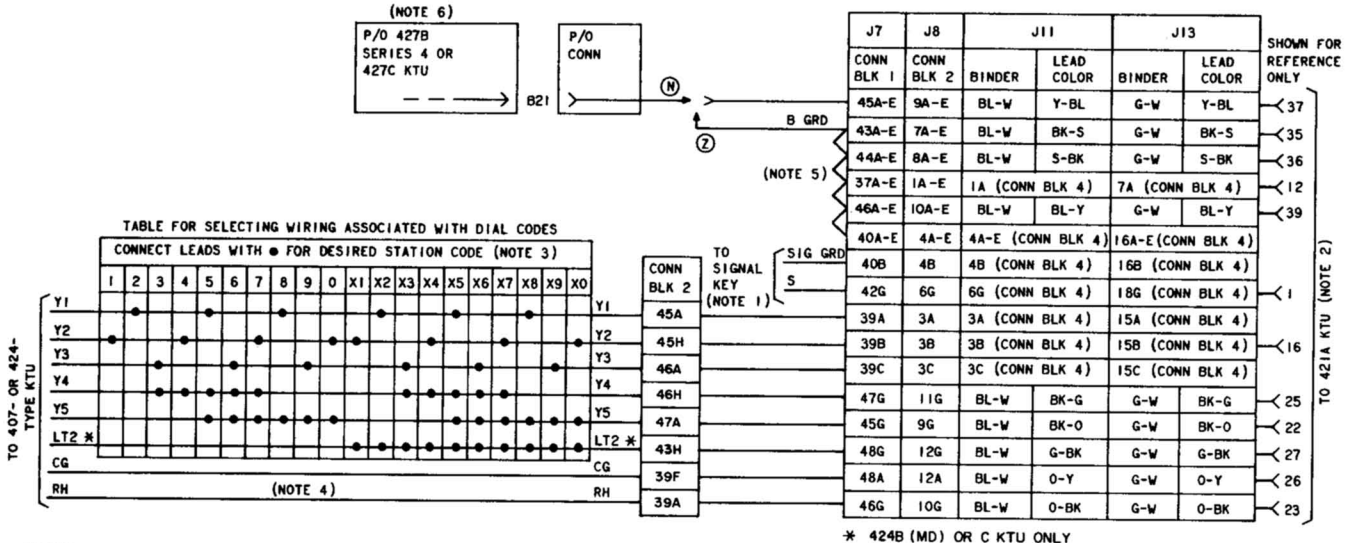

NOTES:

1. PROVIDE SEPARATE SIGNAL KEY FOR EACH STATION CODE TO BE SELECTED.
2. PROVIDE A SEPARATE 421A KTU FOR EACH STATION CODE TO BE SELECTED.
3. SELECT CODE AND CONNECT LEADS FOR SELECTED CODE AS SHOWN IN VERTICAL COLUMN.
4. A 400J DIODE (PROCURED LOCALLY) MUST BE CONNECTED AS SHOWN BELOW BETWEEN THE LK AND RH TERMINALS OF THE 407B (MD) OR C, OR 424B (MD) OR C KTU WHEN WHEN PROVIDING DIAL TONE.

LK —▶|— RH

5. USE CONTINUOUS METHOD OF STRAPPING ON CONNECTING BLOCKS FOR B GROUND.
6. IF MORE THAN ONE 421A KTU IS USED FOR DSS, CONNECT AS SHOWN:

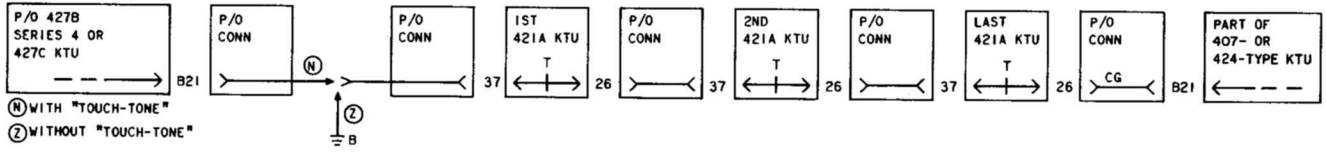

Fig. 22—Connections for 421A KTU (DSS Feature of Dial Intercom)

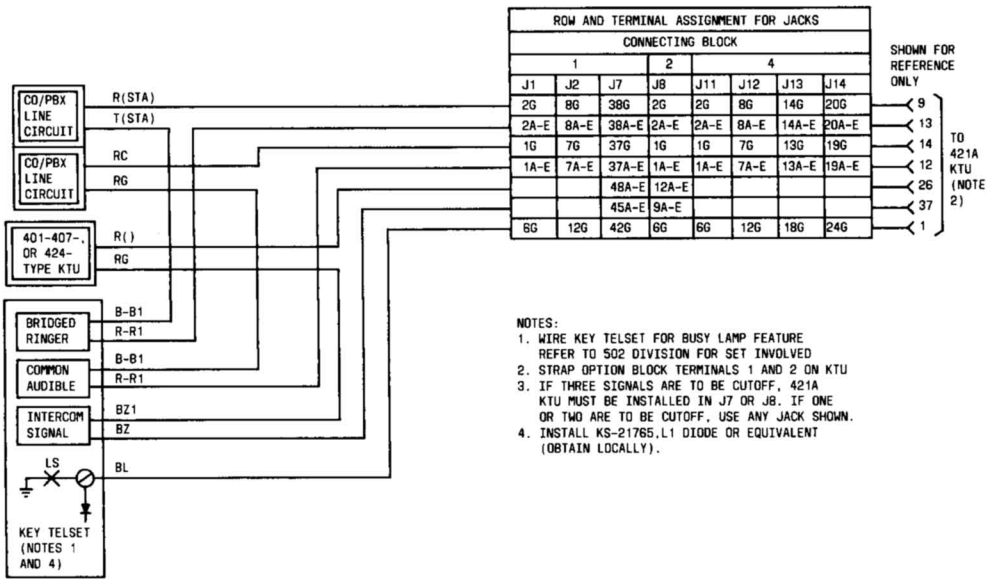

Fig. 23—Connections for 421A KTU (Audible Signal Suppression)

OPTION STRAPPING ON 421A KTU OPTION BLOCK

FEATURE	OPTION	STRAP TERMINALS
PRESET CONFERENCE	W	1 TO 2 7 TO 8

ROW AND TERMINAL ASSIGNMENT				LEAD COLOR LEAD BINDER				
BLOCK				BINDER				
1	2	4 (NOTE 4)		BL	BL-W	G	G-W	
J7	J8	J11	J13	J11		J13		
37G	1G	1G	13G	W-BL		W-BL		14
38G	2G	2G	14G	BL-W		BL-W		9
42G	6G	6G	18G	G-W		G-W		1
43G	7G				BK-BL		BK-BL	20
44G	8G				BL-BK		BL-BK	21
45G	9G				BK-O		BK-O	22
46G	10G				O-BK		O-BK	23
37A-E	1A-E	1A-E	13A-E	W-BR		W-BR		12
38A-E	2A-E	2A-E	14A-E	BR-W		BR-W		13
39A-E	3A-E	3A-E	15A-E	W-S		W-S		16
42A-E	6A-E	6A-E	18A-E	S-W		S-W		8
43A-E	7A-E				BK-S		BK-S	35
44A-E	8A-E				S-BK		S-BK	36

SHOWN FOR REFERENCE ONLY

TO 421A KTU (NOTE 5)

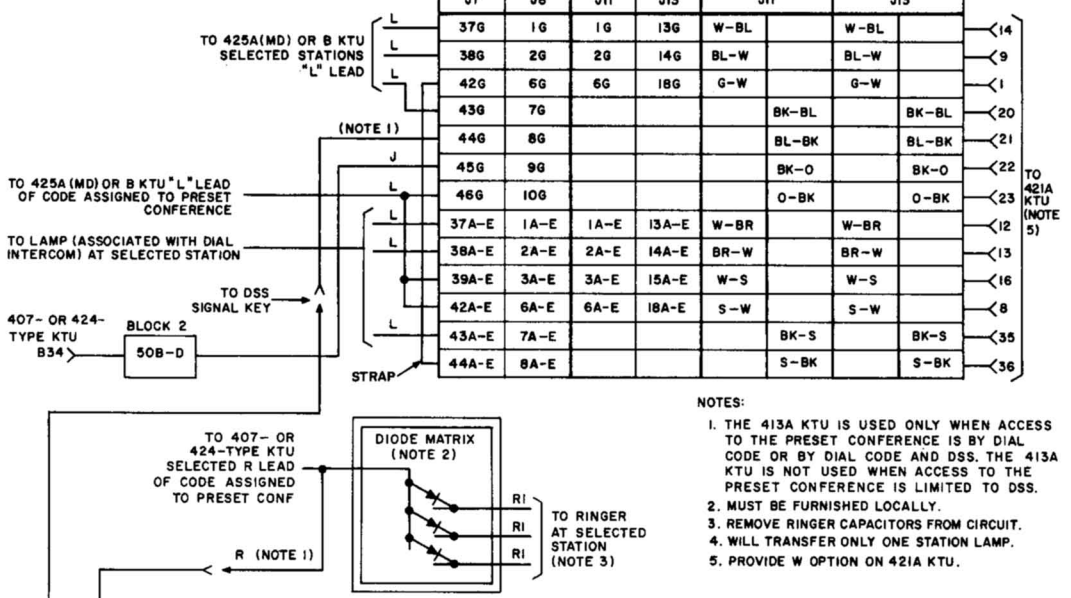

NOTES:

1. THE 413A KTU IS USED ONLY WHEN ACCESS TO THE PRESET CONFERENCE IS BY DIAL CODE OR BY DIAL CODE AND DSS. THE 413A KTU IS NOT USED WHEN ACCESS TO THE PRESET CONFERENCE IS LIMITED TO DSS.
2. MUST BE FURNISHED LOCALLY.
3. REMOVE RINGER CAPACITORS FROM CIRCUIT.
4. WILL TRANSFER ONLY ONE STATION LAMP.
5. PROVIDE W OPTION ON 421A KTU.

ROW AND TERMINAL ASSIGNMENT FOR JACKS												
CONNECTING BLOCKS												
1						4						
J1	J2	J3	J4	J5	J6	J12	J14	J15	J16	J17	J18	
1G	7G	13G	19G	25G	31G	7G	19G	25G	31G	37G	43G	14
2G	8G	14G	20G	26G	32G	8G	20G	26G	32G	38G	44G	9
5G	11G	17G	23G	29G	35G	11G	23G	29G	35G	41G	47G	
1A-E	7A-E	13A-E	19A-E	25A-E	31A-E	7A-E	19A-E	25A-E	31A-E	37A-E	43A-E	12
2A-E	8A-E	14A-E	20A-E	26A-E	32A-E	8A-E	20A-E	26A-E	32A-E	38A-E	44A-E	13
4A-E	10A-E	16A-E	22A-E	28A-E	34A-E	10A-E	22A-E	28A-E	34A-E	40A-E	46A-E	

RG
R
B GRD

SHOWN FOR REFERENCE ONLY

TO 413A KTU

Fig. 24—Connections for 421A KTU (Preset Conference Circuit) for Dial Intercom Line

NOTES:
1. LEADS ARE INSULATED AND STORED. CONNECT AS REQUIRED.
2. CONNECT TO SELECTED STATION BL LEAD AT ANY SPARE TERMINAL.

* – FOR CONNECTION OF DIODE IN THE "A" LEAD, USE THE STATION BUSY OPTION AS SHOWN IN THE CONNECTION SECTION OF TYPE SET USED.
† – PROVIDE A SEPARATE 422B KTU FOR THE UNITS GROUP (1-0), AND FOR THE TENS GROUP (X1-X0).
‡ – FOR (UNITS) 422B KTU.
§ – FOR (TENS) 422B KTU.

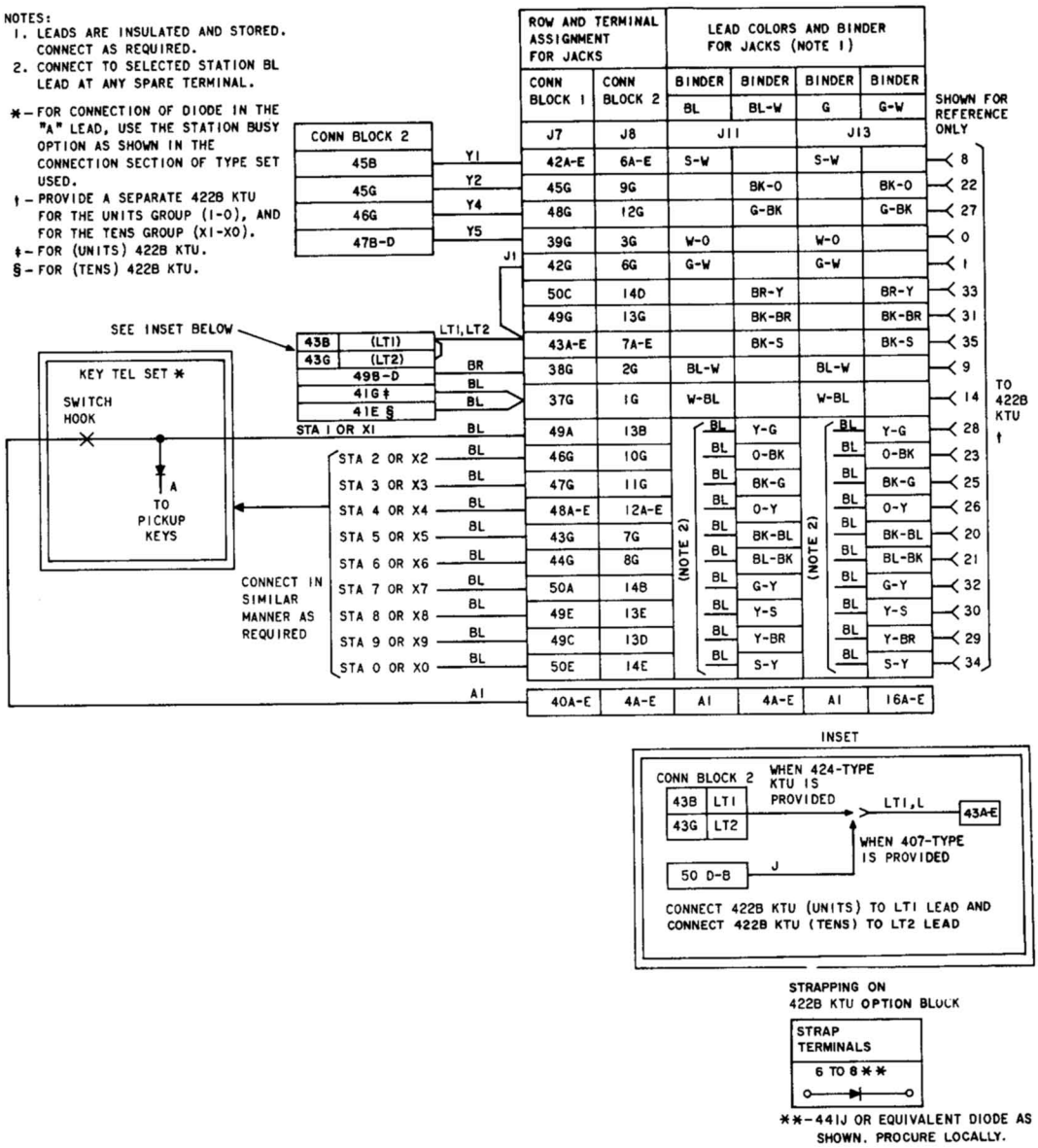

Fig. 25—Connections for 422B KTU (Dial Intercom, Station Busy Selector Circuit)

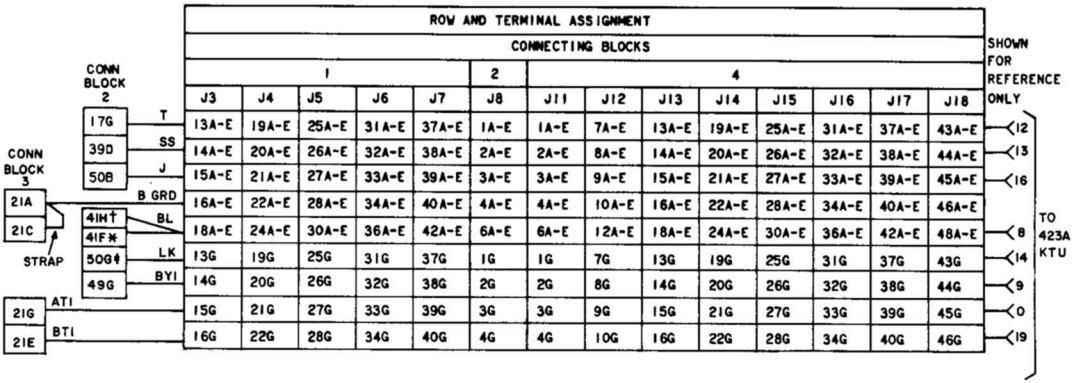

	1					2	4								
	J3	J4	J5	J6	J7	J8	J11	J12	J13	J14	J15	J16	J17	J18	
17G	13A-E	19A-E	25A-E	31A-E	37A-E	1A-E	1A-E	7A-E	13A-E	19A-E	25A-E	31A-E	37A-E	43A-E	12
39D	14A-E	20A-E	26A-E	32A-E	38A-E	2A-E	2A-E	8A-E	14A-E	20A-E	26A-E	32A-E	38A-E	44A-E	13
50B	15A-E	21A-E	27A-E	33A-E	39A-E	3A-E	3A-E	9A-E	15A-E	21A-E	27A-E	33A-E	39A-E	45A-E	16
21A	16A-E	22A-E	28A-E	34A-E	40A-E	4A-E	4A-E	10A-E	16A-E	22A-E	28A-E	34A-E	40A-E	46A-E	
41H† / 21C	18A-E	24A-E	30A-E	36A-E	42A-E	6A-E	6A-E	12A-E	18A-E	24A-E	30A-E	36A-E	42A-E	48A-E	8
41F* / 50G‡	13G	19G	25G	31G	37G	1G	1G	7G	13G	19G	25G	31G	37G	43G	14
49G	14G	20G	26G	32G	38G	2G	2G	8G	14G	20G	26G	32G	38G	44G	9
21G	15G	21G	27G	33G	39G	3G	3G	9G	15G	21G	27G	33G	39G	45G	0
21E	16G	22G	28G	34G	40G	4G	4G	10G	16G	22G	28G	34G	40G	46G	19

* TO TENS 422A (MD) OR B KTU

† TO UNITS 422A(MD) OR B KTU

‡ WHEN ADDING THE 423A KTU TO A SYSTEM EQUIPPED FOR "TOUCH-TONE" (426A AND 427B [SERIES 4] OR C KTUS). A 400J DIODE MUST BE INSTALLED BETWEEN THE "RH" AND "LK" LEADS OF THE 407- OR 424-TYPE KTU. REWIRE AS FOLLOWS:

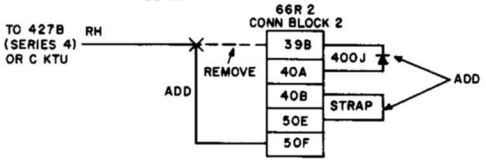

IF THE SYSTEM IS EQUIPPED WITH DSS (421A KTU) REWIRE "RH" LEADS BY TERMINATING ONE LEAD TO TERMINAL 50F AND THE OTHER LEAD TO A 183A2 ADAPTER INSTALLED OVER TERMINAL 50G AND 50H.

OPTION STRAPPING ON 423A KTU OPTION BLOCK

OPTION	FEATURES	STRAP TERMINALS
T	DIAL TONE	1 TO 2
R	STATION BUSY TONE	4 TO 6
S	AUDIBLE RINGBACK	§

§ REQUIRES NO STRAPPING ON KTU

Fig. 26—Connections for 423A KTU (Dial Intercom, Audible Ringback, Dial and Busy Tone Circuit)

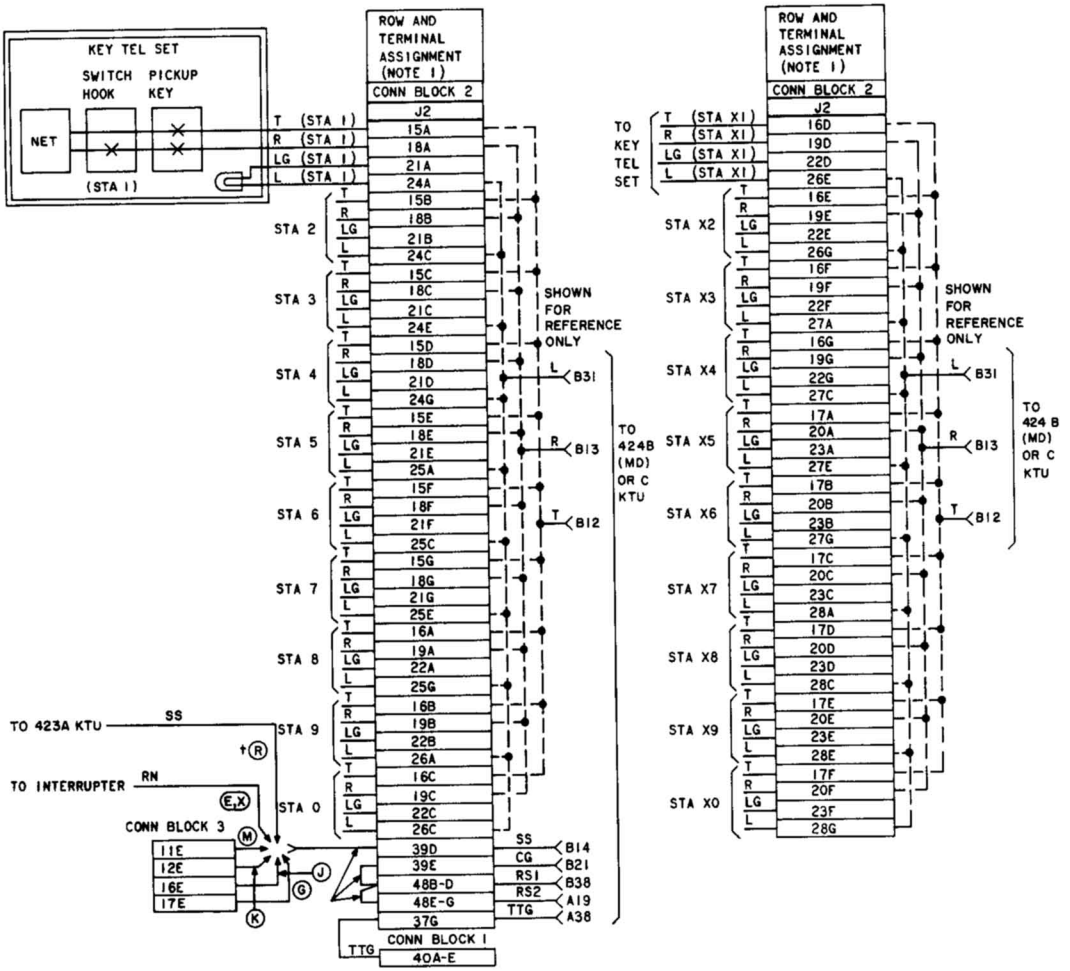

NOTES:

1. CONNECTIONS SHOWN ARE ONLY FOR THE BASIC FEATURES OF THE 424B(MD) OR C KTU, I.E., ROTARY DIAL STATIONS. SINGLE SPURT RINGING, AND STEADY LINE AND BUSY LAMPS. WHEN ADDING OPTIONAL FEATURES SUCH AS FLASHING LINE LAMPS, "TOUCH-TONE" STATIONS, DIAL TONE, ETC, PROVIDE THESE CONNECTIONS, AND THEN REFER TO THE CONNECTION FIGURE OF THE KTU PROVIDING THE OPTIONAL FEATURES BEING ADDED.
2. ANY SELECTED R LEAD (R1-R0) MAY BE ASSIGNED AS THE INITIAL DIGIT OF A 2-DIGIT CODE. THE R LEAD SO ASSIGNED MAY NOT BE USED FOR A STATION CODE.

OPTIONS:

E	INTERRUPTED	10V AC BUZZER	AUDIBLE SIGNALS
X	*	105V 30 HZ RINGER	
G	SINGLE SPURT †	10V AC BUZZER	
J		18V AC BUZZER	
K		DC BUZZER	
M		105V 30 HZ BUZZER	

* TO PROVIDE INTERRUPTED RINGING A 425B KTU MUST BE USED.

† STATION BUSY TONE (R) IS NOT RECOMMENDED FOR USE WITH SINGLE SPURT RINGING.

Fig. 27—Connections for 424B (MD) or 424C KTU (Dial Intercom, 19-Code Selector Circuit) (Sheet 1 of 2)

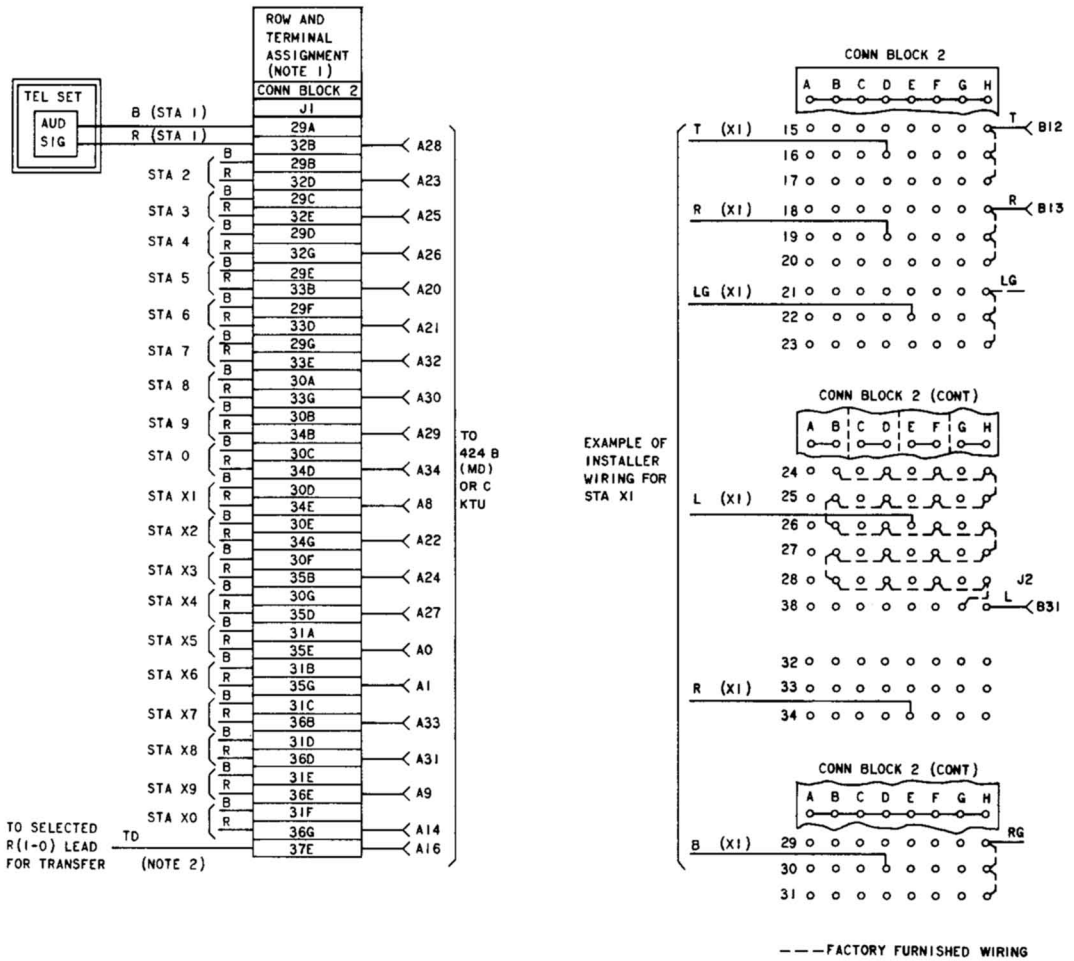

Fig. 27—Connections for 424B (MD) or 424C KTU (Dial Intercom, 19-Code Selector Circuit) (Sheet 2 of 2)

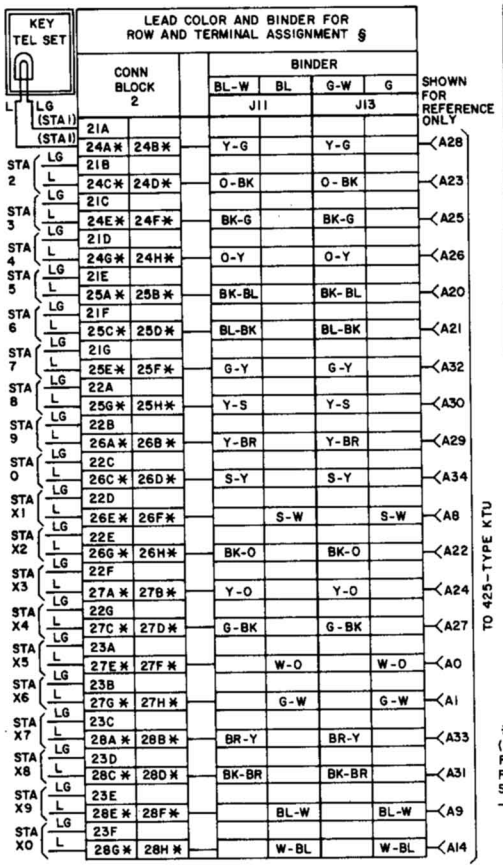

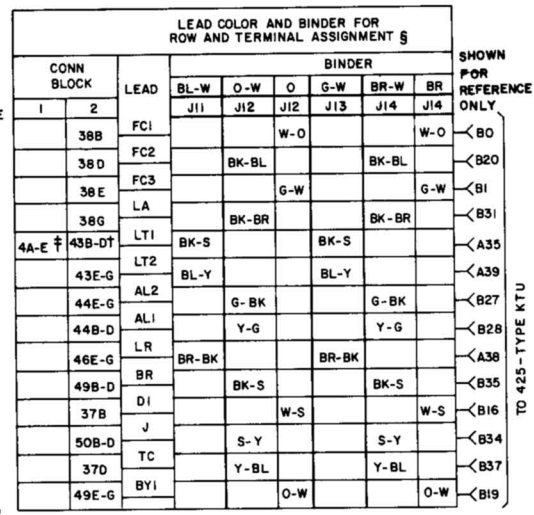

WHEN THE 425A (MD) OR B KTU IS INSTALLED IN J11-J12 OR J13-J14, THE FOLLOWING LEADS (OF SELECTED JACKS) MUST BE INSULATED AND STORED:

JACK	BINDER	LEAD COLOR
J11-J12	BL-W	S-BK Y-BL
	O-W	BK-O Y-O BK-G BL-Y
J13-J14	G-W	S-BK Y-BL
	BR-W	BK-O Y-O BK-G BL-Y

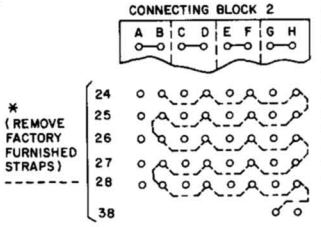

† WHEN USING 424-TYPE KTU

‡ WHEN USING 407-TYPE

§ LEADS ARE INSULATED AND STORED. LOCATE AND TERMINATE AS REQUIRED.

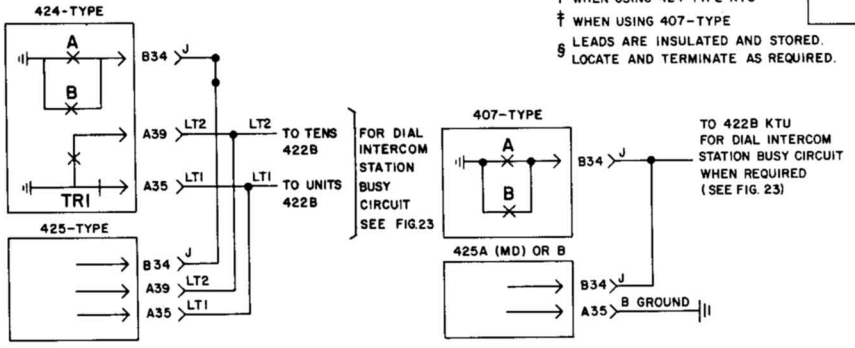

Fig. 28—Connections for 425A (MD) or 425B KTU (Dial Intercom, Flashing Lamp Circuit)

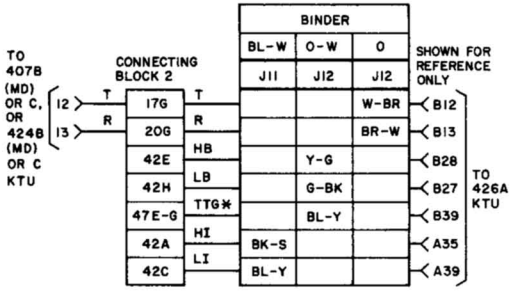

* WHEN ADDING THE 426A AND 427B (SERIES 4) OR C KTUS TO AN EXISTING SYSTEM EQUIPPED WITH A 420A KTU, A DIODE MUST BE INSTALLED IN THE TTG LEAD CONNECTING TO THE 420A KTU. SEE FIG. 20

Fig. 29—Connections for 426A KTU (Part of TOUCH-TONE Adapter Circuit)

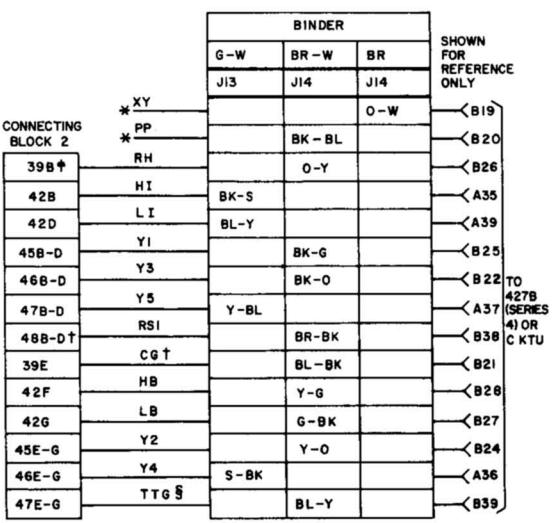

* CONNECT AS REQUIRED WHEN THE 11TH KEY (XY) OR 12TH KEY (PP) IS USED.

† REMOVE STRAP BETWEEN 39E AND 48B CONNECTING BLOCK 2, IF PROVIDED.

‡ WHEN A 423A KTU IS ADDED, THE RH LEAD SHOULD BE REMOVED FROM 39B AND CONNECTED TO 50F. A 400J DIODE MUST BE INSTALLED BETWEEN 39B AND 50E. REFER TO FIG. 26 .

§ WHEN ADDING THE 426A AND 427B (SERIES 4) OR C KTUS TO AN EXISTING SYSTEM EQUIPPED WITH A 420A KTU, A DIODE MUST BE INSTALLED IN THE TTG LEAD CONNECTING TO THE 420A KTU. SEE FIG. 20.

Fig. 30—Connections for 427B (Series 4) or C KTU (Part of TOUCH-TONE Adapter Circuit)

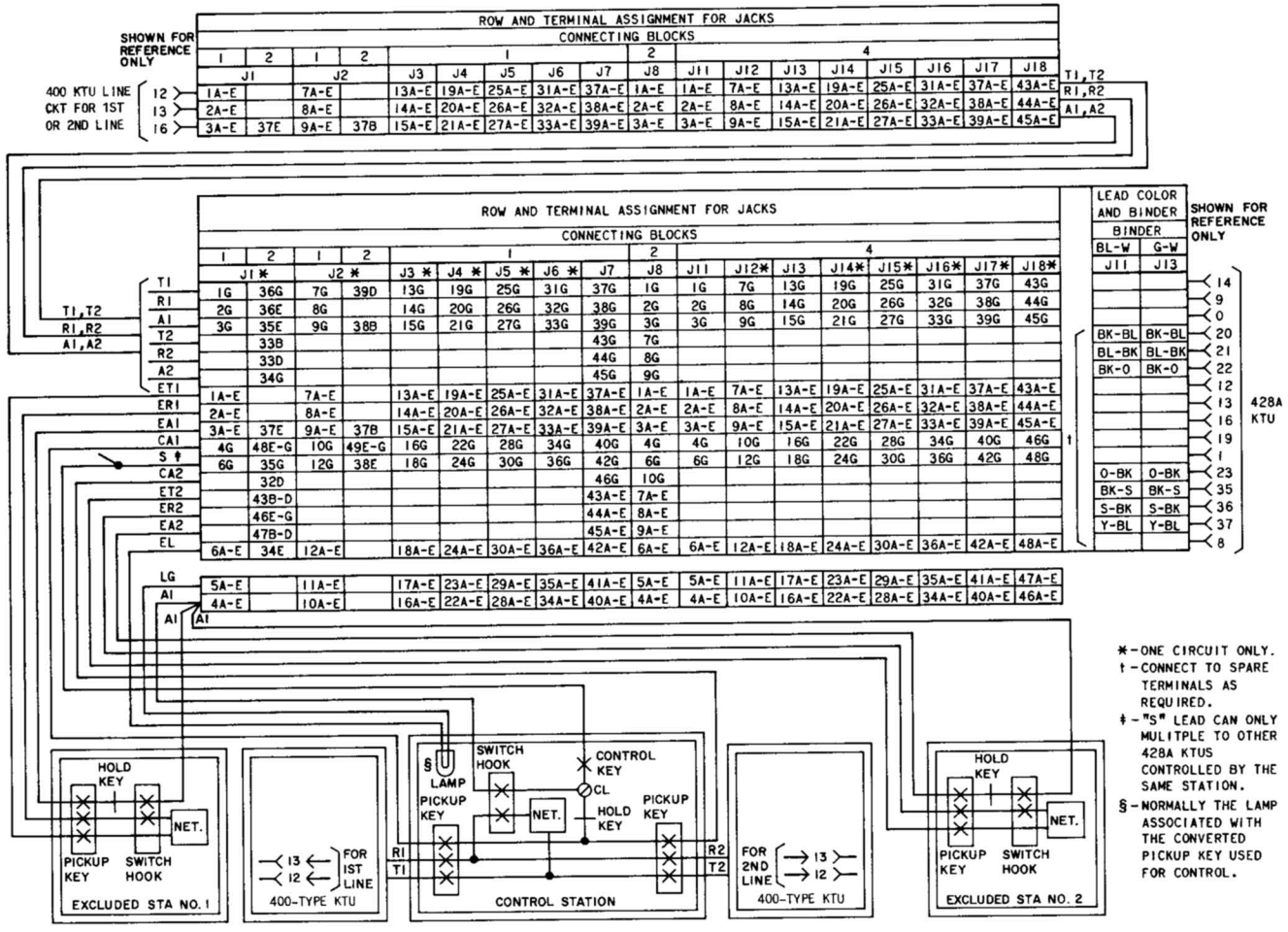

*-ONE CIRCUIT ONLY.
†-CONNECT TO SPARE TERMINALS AS REQUIRED.
‡-"S" LEAD CAN ONLY MULITPLE TO OTHER 428A KTUS CONTROLLED BY THE SAME STATION.
§-NORMALLY THE LAMP ASSOCIATED WITH THE CONVERTED PICKUP KEY USED FOR CONTROL.

Fig. 31—Connections for 428A KTU (Multiline Exclusion Circuit)

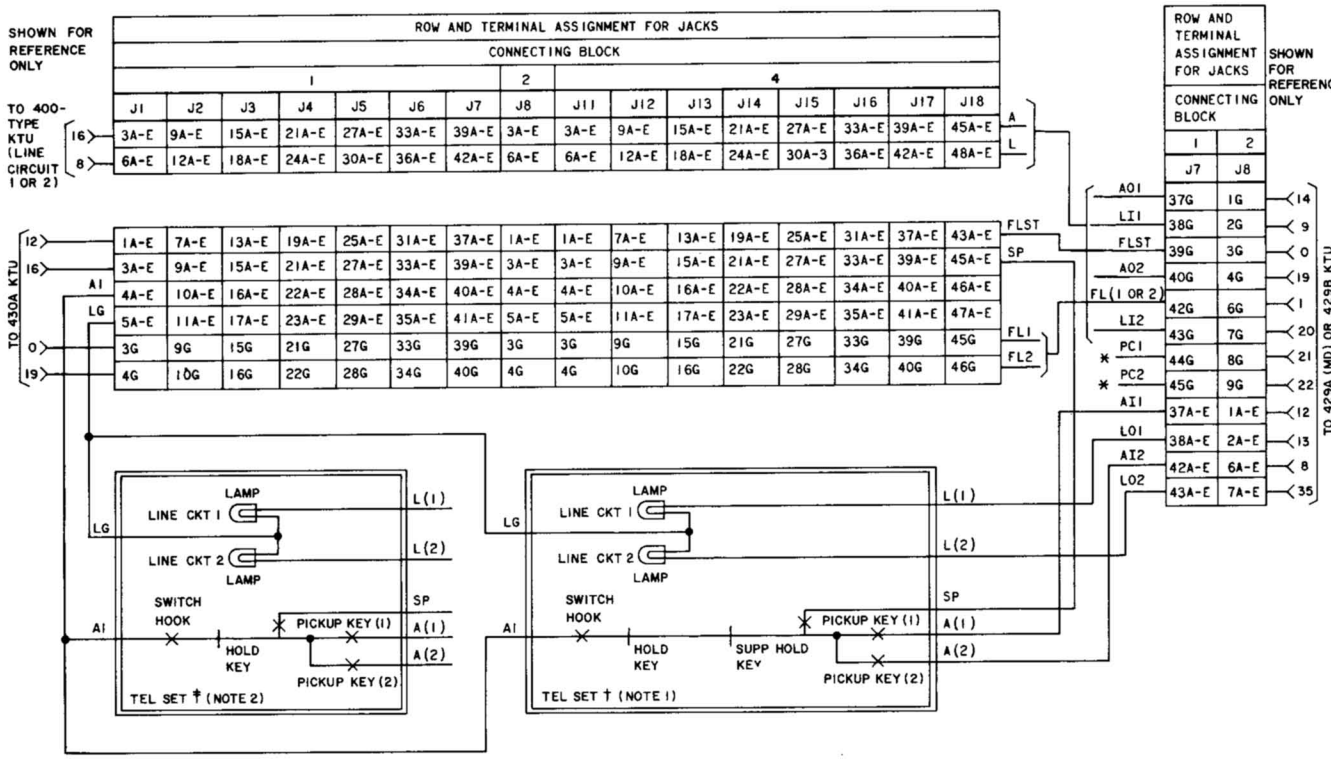

NOTES:

1. FOR PRIORITY HOLD, THE A AND L LEADS FROM EACH TEL SET CONNECT THROUGH THE 429A (MD) OR 429B KTU TO THE 400-TYPE KTU.
2. FOR I HOLD, THE A AND L LEADS FROM THE TEL SET SELECTED FOR I HOLD CONNECT THROUGH THE 429A (MD) OR 429B KTU TO THE 400-TYPE KTU. THE A AND L LEADS FROM THE OTHER TEL SETS CONNECT DIRECTLY TO THE 400-TYPE KTU.
3. THE 429A (MD) OR 429B KTU WILL PROVIDE SUPPLEMENTARY HOLD FOR TWO CO OR PBX LINE CIRCUITS. EACH HOLD CIRCUIT MAY BE ASSIGNED AS PRIORITY OR I HOLD.
4. LIMITATIONS OF THE 430A KTU ARE AS FOLLOWS:
   A. FL1 OR FL2 LEAD CAN SERVE A MAXIMUM OF 50 LAMPS.
   B. SP LEAD CAN CONNECT TO A MAXIMUM OF 20 STATIONS.

* TO MESSAGE REGISTER IF PROVIDED
† WIRED FOR PRIORITY HOLD
‡ WIRED FOR I HOLD

Fig. 32—Connections for 429A (MD) or 429B KTU and 430A KTU (Supplementary Hold Detector and Flutter Generator Circuit)

	SELECT JACK ASSOCIATED WITH 400-TYPE KTU AND CONNECT AS SHOWN															
	CONNECTING BLOCK															
	1							2	4							
	J1	J2	J3	J4	J5	J6	J7	J8	J11	J12	J13	J14	J15	J16	J17	J18
	1B	7B	13B	19B	25B	31B	37B	1B	1B	7B	13B	19B	25B	31B	37B	43B
	2B	8B	14B	20B	26B	32B	38B	2B	2B	8B	14B	20B	26B	32B	38B	44B
	6B	12B	18B	24B	30B	36B	42B	6B	6B	12B	18B	24B	30B	36B	42B	48B
	6G*	12G*	18G*	24G*	30G*	36G*	42G*	6G*	6G*	12G*	18G*	24G*	30G*	36G*	42G*	48G*
TO PRINCIPAL TEL SETS — T(P1 OR P2)	1C	7C	13C	19C	25C	31C	37C	1C	1C	7C	13C	19C	25C	31C	37C	43C
R(P1 OR P2)	2C	8C	14C	20C	26C	32C	38C	2C	2C	8C	14C	20C	26C	32C	38C	44C
A(P1 OR P2)	3C	9C	15C	21C	27C	33C	39C	3C	3C	9C	15C	21C	27C	33C	39C	45C
A1(P1 OR P2)	4C	10C	16C	22C	28C	34C	40C	4C	4C	10C	16C	22C	28C	34C	40C	46C
LG(P1 OR P2)	5C	11C	17C	23C	29C	35C	41C	5C	5C	11C	17C	23C	29C	35C	41C	47C
L(P1 OR P2)	6C	12C	18C	24C	30C	36C	42C	6C	6C	12C	18C	24C	30C	36C	42C	48C
RC(P1)																
RC(P2)																
RG(P1 OR P2)																
TO ATTENDANT STATION — RG	5G*	11G*	17G*	23G*	29G*	35G*	41G*	5G*	5G*	11G*	17G*	23G*	29G*	35G*	41G*	47G*
T	1D	7D	13D	19D	25D	31D	37D	1D	1D	7D	13D	19D	25D	31D	37D	43D
R	2D	8D	14D	20D	26D	32D	38D	2D	2D	8D	14D	20D	26D	32D	38D	44D
A	3D	9D	15D	21D	27D	33D	39D	3D	3D	9D	15D	21D	27D	33D	39D	45D
A1	4D	10D	16D	22D	28D	34D	40D	4D	4D	10D	16D	22D	28D	34D	40D	46D
LG	5D	11D	17D	23D	29D	35D	41D	5D	5D	11D	17D	23D	29D	35D	41D	47D
L(AT1)																
RC																
L(AT2)																

OPTION STRAPPING ON 448A KTU OPTION BLOCK

	OPTION	FEATURE	STRAP TERMINALS	
			1ST CKT	2ND CKT
AUDIBLE SIGNALS	W	INTERRUPTED RING	8 TO 7§	3 TO 5§
	T	STEADY RING	8 TO 6	3 TO 4
	X	STEADY BUZZER	8 TO 10	3 TO 1

§ FACTORY PROVIDED

NOTES:

1. 448A KTU CONTAINS TWO CIRCUITS.
2. PLACE STRAP ON 400-TYPE KTUS AS FOLLOWS:
   - 400B AND C - STRAP TERMINAL 3 TO 6
   - 400D - STRAP TERMINAL 4 TO 8
   - 400G - CONNECT TERMINAL C1 TO C3
3. TO 400-TYPE KTU ASSOCIATED WITH FIRST CIRCUIT OF 448A KTU.
4. TO 400-TYPE KTU ASSOCIATED WITH SECOND CIRCUIT OF 448A KTU.

* USE 183A2 ADAPTER TO MULTIPLE LEADS

† TO 449A KTU OR TURN KEY IF IMMEDIATE RINGER TRANSFER REQUIRED

‡ TO FIRST AND SECOND PRINCIPAL TEL SETS IF COMMON AUDIBLE IS TO BE USED AND RINGER IS NOT TO BE CUT OFF.

Fig. 33—Connections for 448A KTU (Variable Delay Timer Circuit) (Sheet 1 of 2)

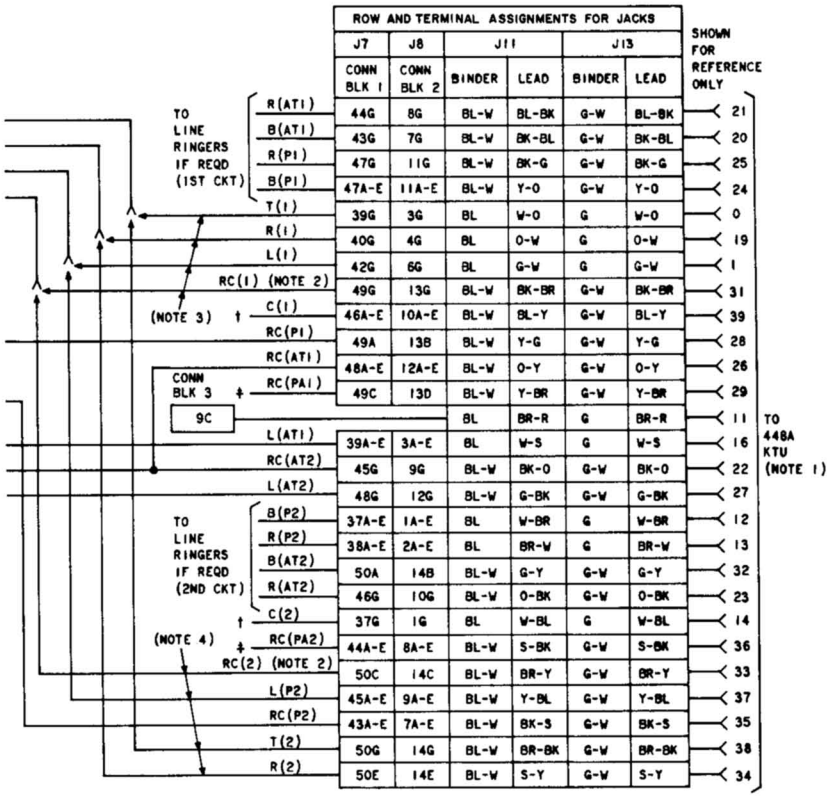

Fig. 33—Connections for 448A KTU (Variable Delay Timer Circuit) (Sheet 2 of 2)

SELECT JACK ASSOCIATED WITH 400-TYPE KTU AND CONNECT AS SHOWN																
CONNECTING BLOCK																
1							2	4								
J1	J2	J3	J4	J5	J6	J7	J8	J11	J12	J13	J14	J15	J16	J17	J18	
1B	7B	13B	19B	25B	31B	37B	1B	1B	7B	13B	19B	25B	31B	37B	43B	T*
2B	8B	14B	20B	26B	32B	38B	2B	2B	8B	14B	20B	26B	32B	38B	44B	R*
5G†	11G†	17G‡	23G‡	29G‡	35G‡	41G‡	5G†	5G†	11G†	17G‡	23G‡	29G‡	35G‡	41G‡	47G‡	RG†
6B	12B	18B	24B	30B	36B	42B	6B	6B	12B	18B	24B	30B	36B	42B	48B	L(1)
6G†	12G†	18G‡	24G‡	30G‡	36G‡	42G‡	6G†	6G†	12G†	18G‡	24G‡	30G‡	36G‡	42G‡	48G‡	RC† (NOTE 5)

TO PRINCIPAL TEL SETS

R* OR RC†(P1)
B* OR RG†(P1)

T	1C	7C	13C	19C	25C	31C	37C	1C	1C	7C	13C	19C	25C	31C	37C	43C
R	2C	8C	14C	20C	26C	32C	38C	2C	2C	8C	14C	20C	26C	32C	38C	44C
A	3C	9C	15C	21C	27C	33C	39C	3C	3C	9C	15C	21C	27C	33C	39C	45C
AI	4C	10C	16C	22C	28C	34C	40C	4C	4C	10C	16C	22C	28C	34C	40C	46C
LG	5C	11C	17C	23C	29C	35C	41C	5C	5C	11C	17C	23C	29C	35C	41C	47C
L(1)	6C	12C	18C	24C	30C	36C	42C	6C	6C	12C	18C	24C	30C	36C	42C	48C
SG(P1 AND P2)	4D	10D	16D	22D	28D	34D	40D	4D	4D	10D	16D	22D	28D	34D	40D	46D
S(P1)																
LG(P1 AND P2)	5D	11D	17D	23D	29D	35D	41D	5D	5D	11D	17D	23D	29D	35D	41D	47D
L(P1)																

B* OR RG†(P2)
B* OR RC†(P2)
L(P2)
S(P2)

TO ATTENDANT STATION

T	1D	7D	13D	19D	25D	31D	37D	1D	1D	7D	13D	19D	25D	31D	37D	43D
R	2D	8D	14D	20D	26D	32D	38D	2D	2D	8D	14D	20D	26D	32D	38D	44D
A	3D	9D	15D	21D	27D	33D	39D	3D	3D	9D	15D	21D	27D	33D	39D	45D
AI	4D	10D	16D	22D	28D	34D	40D	4D	4D	10D	16D	22D	28D	34D	40D	46D
LG	5E	11E	17E	23E	29E	35E	41E	5E	5E	11E	17E	23E	29E	35E	41E	47E

R* OR RC†
R* OR RG†
L(AT1)
L(AT2)

NOTES:
1. 449A KTU CONTAINS TWO CIRCUITS.
2. CONNECT B GRD ONLY IF 448A KTU IS PROVIDED. IF 448A KTU IS PROVIDED, NONE OF THE RINGER CONNECTIONS ARE REQUIRED.
3. TO 400-TYPE KTU ASSOCIATED WITH FIRST CIRCUIT OF 449A KTU.
4. TO 400-TYPE KTU ASSOCIATED WITH SECOND CIRCUIT OF 449A KTU.
5. PLACE STRAP ON 400-TYPE KTU AS FOLLOWS:
   - 400B AND C - STRAP TERMINAL 4 TO 6
   - 400D - STRAP TERMINAL 6 TO 8
   - 400G - CONNECT TERMINALS C3 TO C4

* FOR LINE RINGING
† FOR COMMON AUDIBLE RINGING
‡ USE 183A2 ADAPTER TO MULTIPLE LEADS

Fig. 34—Connections for 449A KTU (Immediate Transfer Control Circuit) (Sheet 1 of 2)

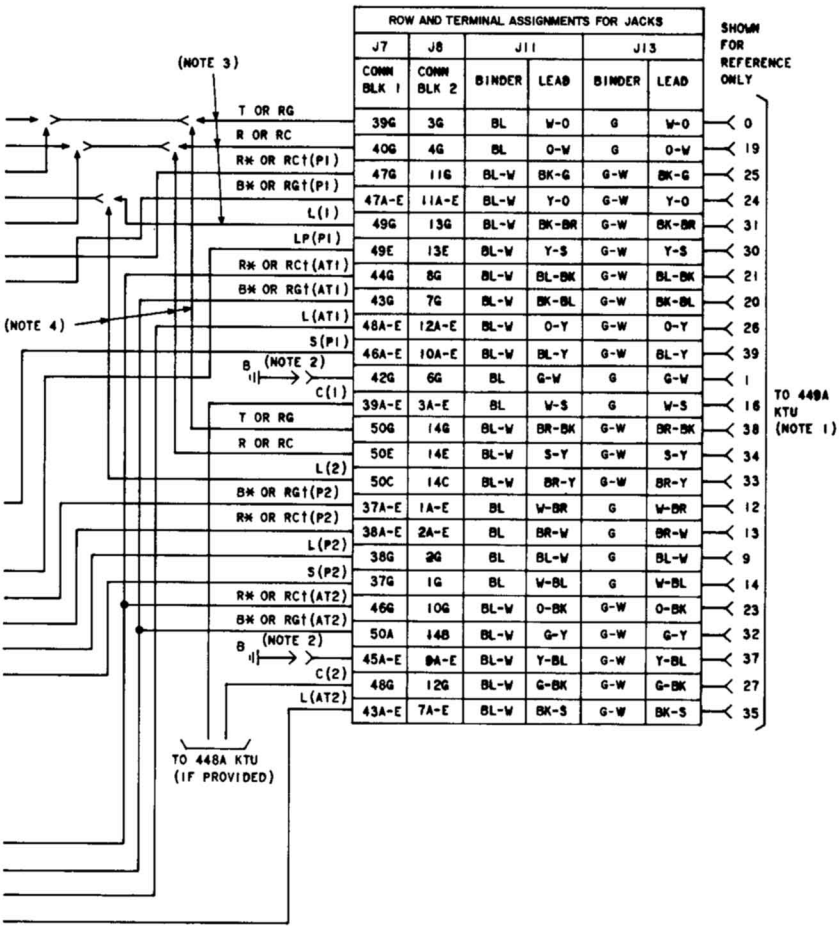

Fig. 34—Connections for 449A KTU (Immediate Transfer Control Circuit) (Sheet 2 of 2)

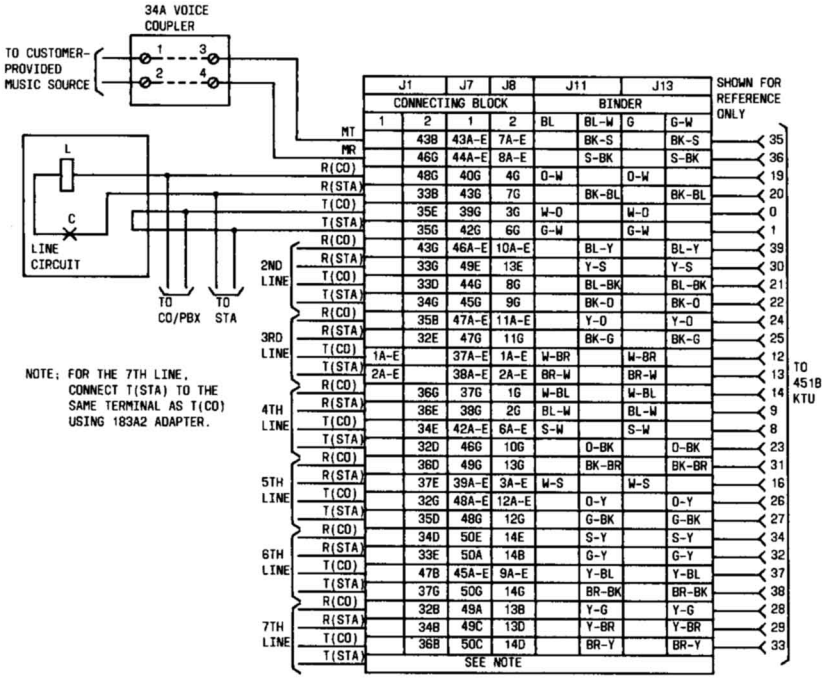

Fig. 35— ⧫Connections for 451B KTU (Music-On-Hold)⧫

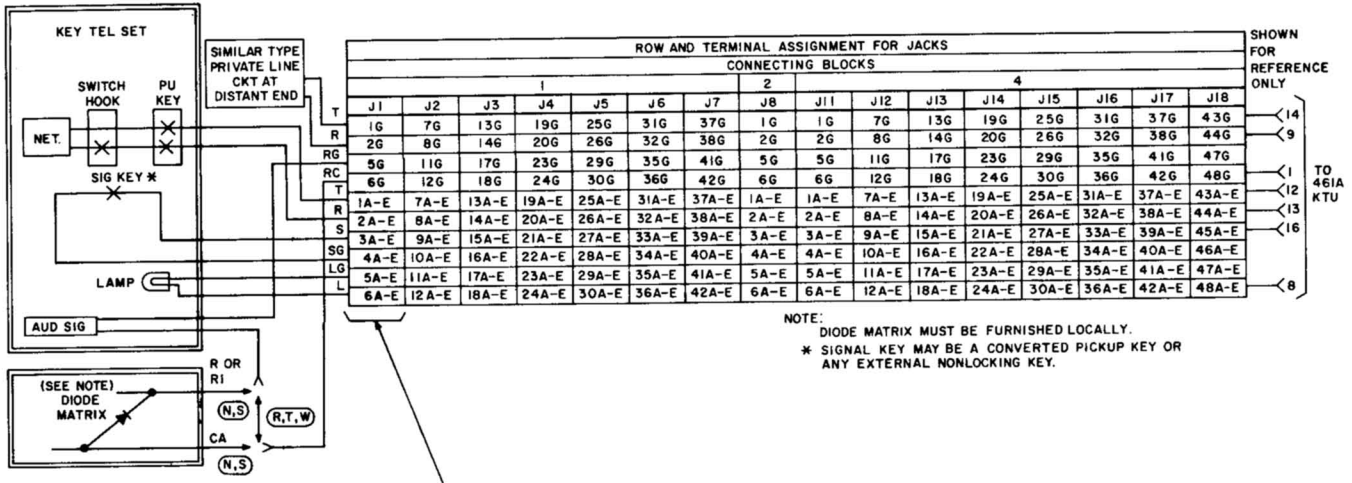

OPTION STRAPPING ON 461A KTU OPTION BLOCK

FEATURES			OPTION	STRAP TERMINALS
AUDIBLE SIGNALS	UNDER CONTROL OF TIME-OUT CIRCUIT (B RELAY)	INTERRUPTED RING	W	7 TO 8
		STEADY RING	T	6 TO 7
		COMMON WITH DIODE MATRIX CONTROL	S	7 TO 8
	UNDER CONTROL OF R RELAY	STEADY RING	R	4 TO 6
		COMMON WITH DIODE MATRIX CONTROL	N	
TIME-OUT	10 SECONDS		X	1 TO 2
	16 SECONDS		Z	2 TO 3
	23 SECONDS		WITHOUT X OR X	REMOVE X OR Z STRAPS
AUDIBLE RINGBACK TONE			M	4 TO 10

Fig. 36—Connections for 461A KTU (Manual Signaling, Ringdown Private Line Circuit)

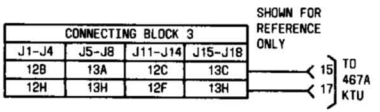

NOTE: 467A KTU CAN BE INSTALLED IN ANY CONNECTOR. KTU MONITORS B BATTERY WHICH IS FACTORY WIRED TO ALL CONNECTORS. NO EXTERNAL CONNECTIONS ARE REQUIRED.

Fig. 37—Connections for 467A KTU (Low-Voltage Monitor Circuit)

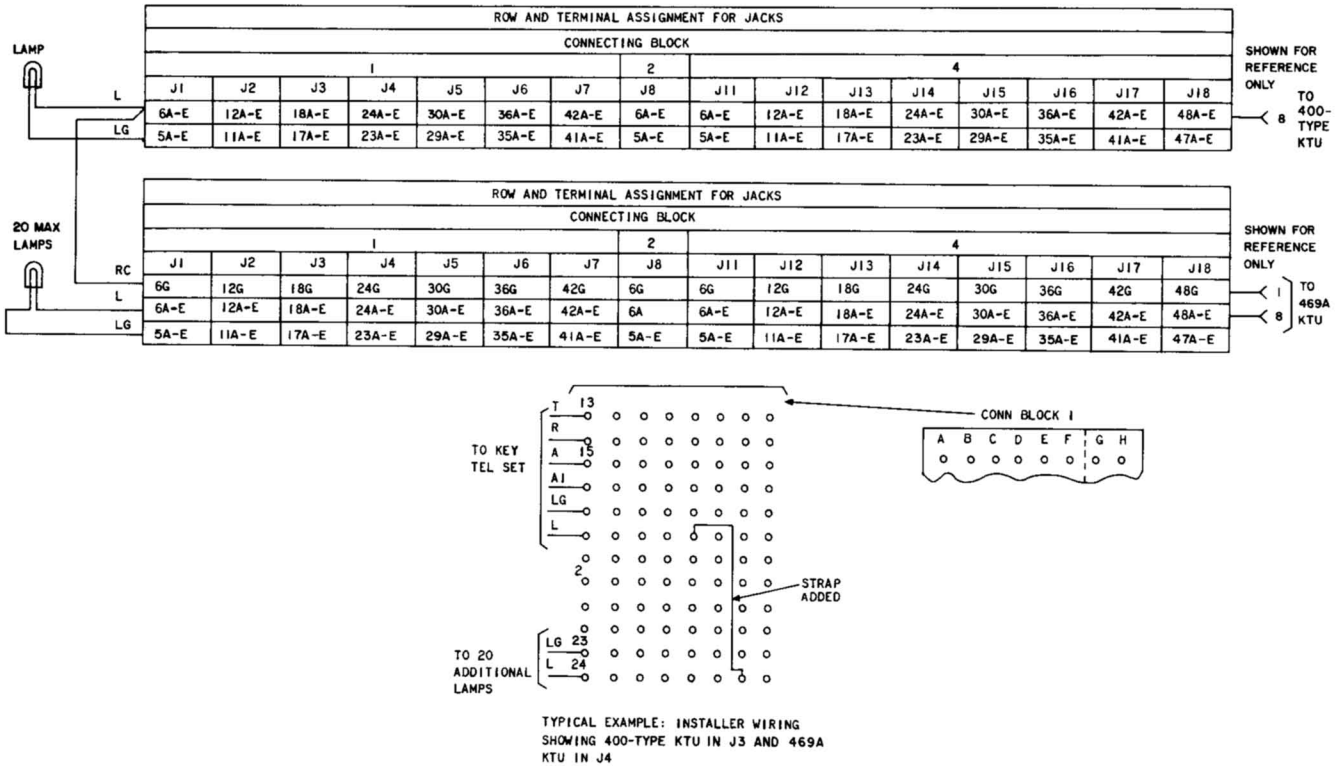

Fig. 38—Connections for 469A KTU (Lamp Extender Circuit)

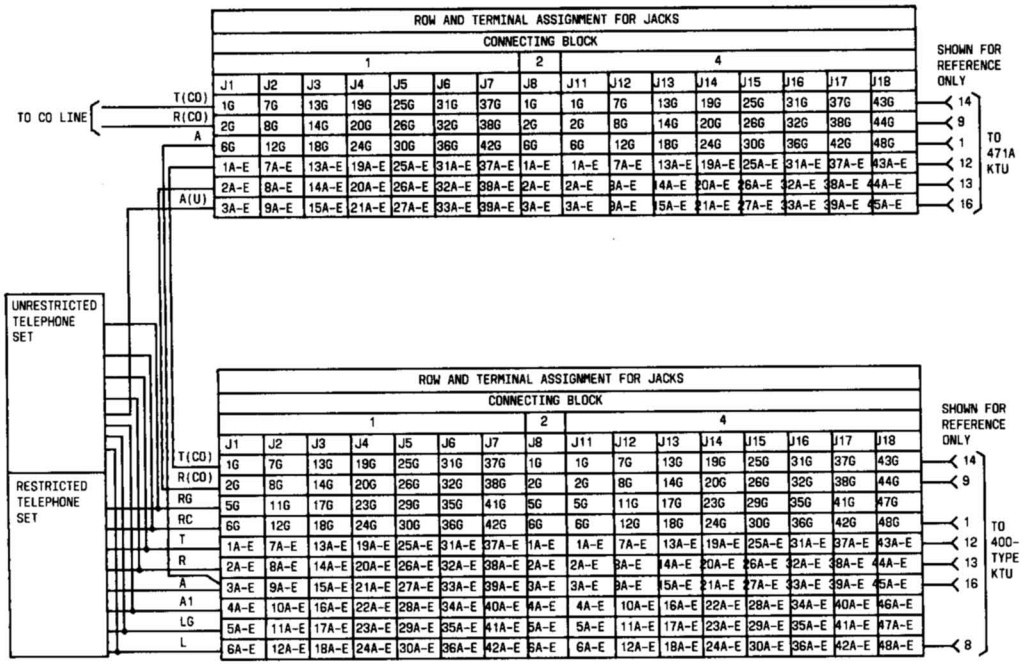

Fig. 39—Connections for 471-Type KTU (Battery Reversal Toll Restriction Circuit)

NOTES:
1. THE 479B KTU IS AN 8-INCH BOARD AND MOUNTS IN J1 AND J2, J11 AND J12 OR J13 AND J14.
2. REFER TO SECTION 518-215-401 FOR INFORMATION ON PLACEMENT OF OPTION PLUGS ON 479B KTU AND 107A AND 107B CIRCUIT MODULES.

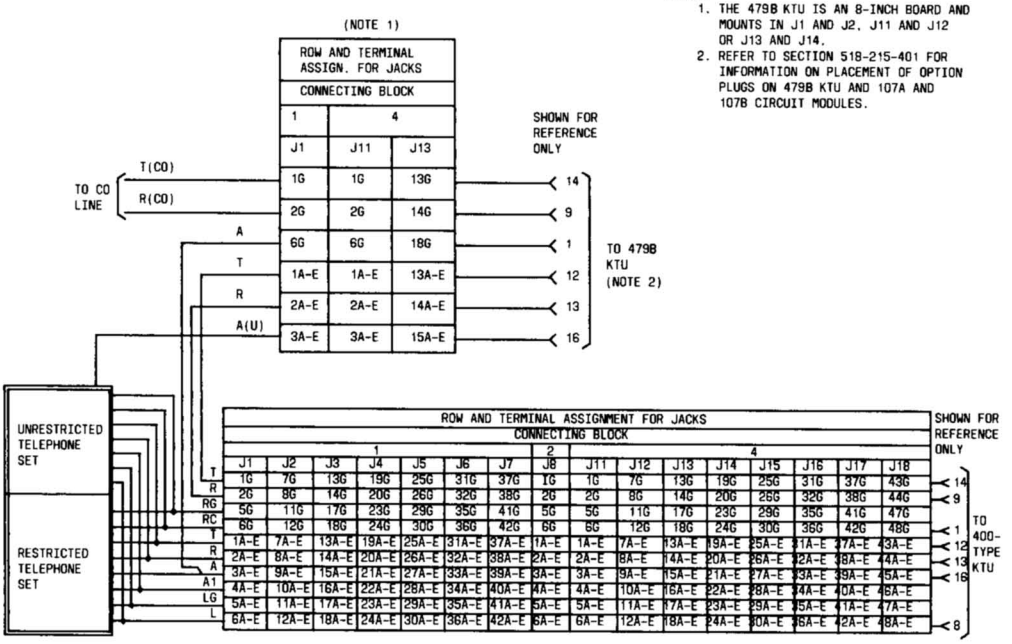

Fig. 40—Connections for 479B KTU (Rotary Dial Toll Restriction Circuit)

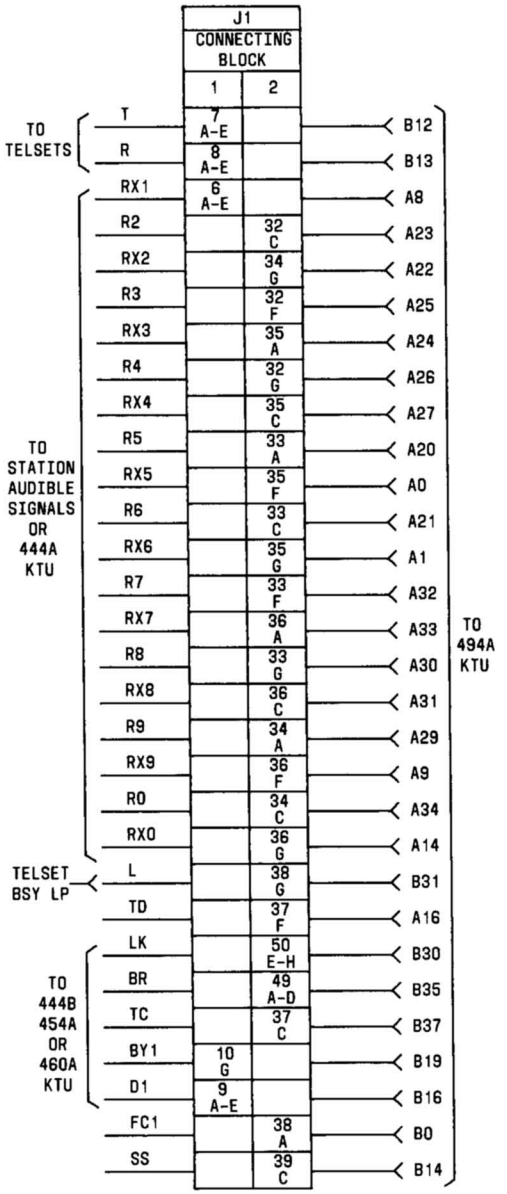

Fig. 41—Connections for 494A KTU (TOUCH-TONE Selection Circuit)

		J1		J7	J8	J11		J13		
		CONNECTING BLOCK				BINDER				SHOWN FOR REFERENCE ONLY
		1	2	1	2	BL	BL-W	G	G-W	
1ST LINE (NOTE 1)	14A-E R(STA)		47B	45A	9A		Y-BL		Y-BL	37
	13A-E T(STA)		34D	50E	14E		S-Y		S-Y	34
	15A-E A		33D	44G	8G		BL-BK		BL-BK	21
	18A-E L		35E	39G	3G	W-OR				0
2ND LINE	R(STA)		48G	40G	4G	O-W			O-W	19
	T(STA)		46G	44A	8A		SL-BK		SL-BK	36
	A		32E	47G	11G		BK-G		BK-G	25
	L		35B	47A	11A		Y-O		Y-O	24
3RD LINE	R(STA)		43G	46A	10A		BL-Y		BL-Y	39
	T(STA)		43B	43A	7A		BK-S		BK-S	35
	A		34G	45G	9G		BK-O		BK-O	22
	L		32D	46G	10G		O-BK		O-BK	23
4TH LINE	R(STA)		37E	39A	3A	W-S		W-SL		16
	T(STA)		36G	37G	1G	W-BL		W-BL		14
	A		35G	42G	6G	G-W		G-W		1
	L		33B	43G	7G	BK-BL		BK-BL		20
TO 34A VOICE COUPLER	M1	1A-E		37A	1A	WBR		W-BR		12
	M2		37G	50G	14G		BR-BK		BR-BK	38

TO 498A KTU

NOTES:

1. TERMINATIONS SHOWN ARE FOR 400H IN JK3, SHOWN AS EXAMPLE ONLY
2. THIS KTU SHOULD BE USED FOR 4 CIRCUITS ONLY. THE 116A1 CIRCUIT MODULE MUST NOT BE ADDED BECAUSE OF WIRING INCOMPATIBILITY.

Fig. 42—Connections for 498A KTU (Music-On-Hold)

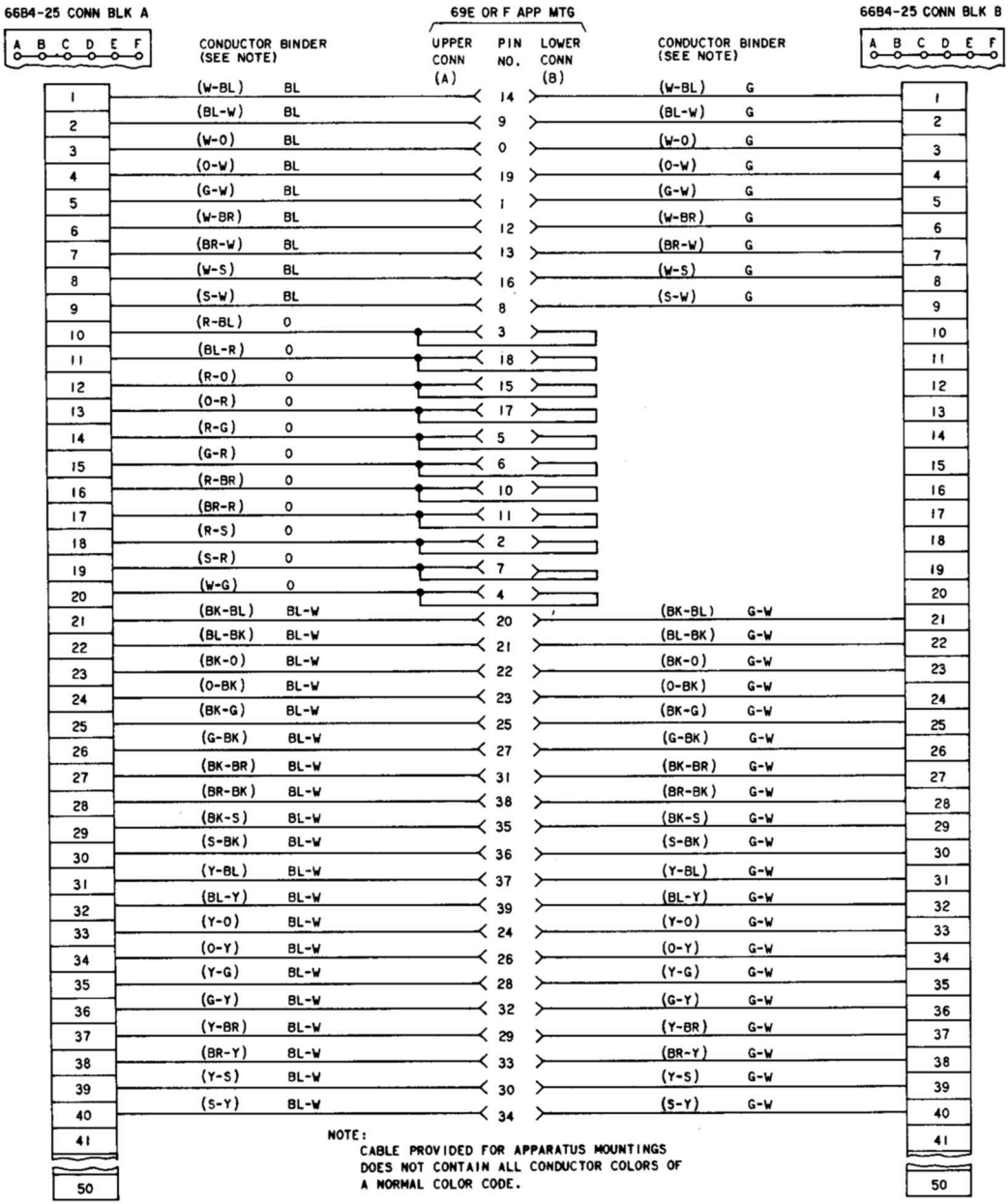

Fig. 43—Connections From 69E or 69F apparatus Mounting to External Connecting Blocks

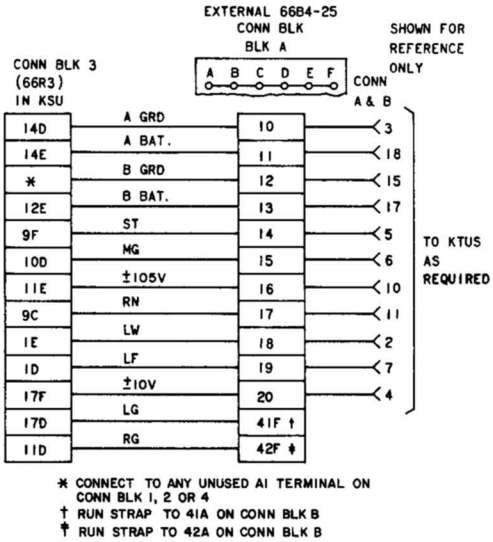

Fig. 44—Power Supply Connections for 69E or F Apparatus Mounting

NOTES:

1. THE 400D KTU IS FACTORY WIRED FOR 10-SECOND TIME-OUT AND 7-SECOND TIMEOUT RESPECTIVELY PLUS WINDING-HOLD LAMP, AND W AND S WIRING OPTIONS.
2. DIODE MATRIX MUST BE FURNISHED LOCALLY.
3. FOR 30 SECOND TIME-OUT CYCLE, REMOVE Z OPTION STRAP BETWEEN TERMINALS 1 AND 2.
4. TO PROVIDE TIME-OUT CYCLES OF RING-UP CIRCUITS FROM 3.4 TO 7.5 SECONDS REPLACE Z OPTION STRAP WITH A KS-13490,L1 OR EQUIVALENT (1 WATT) RESISTOR. USE ONE RESISTOR LEAD AS A STRAP BETWEEN TERMINALS 1 AND 2 AND CONNECT THE OTHER LEAD TO TERMINAL 3. USE TABLE BELOW FOR RESISTOR VALUE REQUIRED FOR DESIRED TIME-OUT INTERVAL.

TIME IN SEC FROM 10 SEC TO:	RESISTOR MEGOHM	EFFECT ON DELAYED HOLD RELEASE OPTIONS	
		ZC	ZJ
7.5	1.2	NONE	NONE
6.7	.75	NOT RECOMMENDED (NOTE 5)	
5.0	.39		
3.4	.20		

IF THE TIME-OUT CYCLE IS REDUCED IN CONJUNCTION WITH ZC OR ZJ OPTION, CONNECT THE RESISTOR AND CAPACITOR AS SHOWN BELOW:

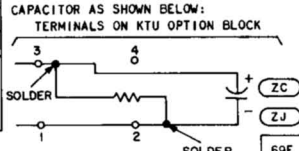

5. WHEN Z OPTION IS PROVIDED WITH ZC OR ZJ OPTIONS, REMOVE THE Z STRAP AND USE THE CAPACITOR LEAD AS A STRAP BETWEEN TERMINALS 1 AND 2.
6. WHEN THE ZC OPTION IS USED DUE TO THE DELAYED RELEASE OF THE HOLDING BRIDGE, SOME TRANSMISSION LOSS IS ENCOUNTERED FOR APPROXIMATELY 1 SECOND WHEN A STATION REENTERS A HELD CALL.
7. ZD OPTION IS REPLACED BY ZJ OPTION, HOWEVER IT IS NOT NECESSARY TO UPDATE CIRCUITS PREVIOUSLY MODIFIED WITH OPTION ZD.
8. (V) OPTION MAY BE USED IN LOCALLY ENGINEERED OR RELAY COMMON AUDIBLE ARRANGEMENTS.

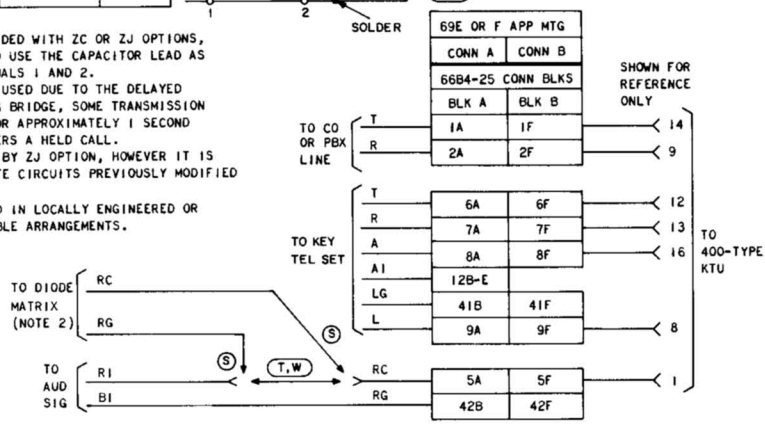

OPTION STRAPPING ON 400-TYPE KTU OPTION BLOCK (NOTE 8)

FEATURES			OPTION	STRAP TERMINALS	
				400D (NOTE 1)	400A, B AND C
AUDIBLE SIGNALS	INTERRUPTED RING		W	5 TO 8	5 TO 6
	STEADY RING		T	6 TO 8	4 TO 6
	COMMON WITH DIODE MATRIX CONTROL		S	5 TO 8	5 TO 6
VISUAL HOLD CIRCUIT	LAMP WINK		Y	7 TO 10	8 TO 9
	LAMP STEADY		X	7 TO 9	7 TO 9
TIME-OUT CONTROL (NOTES 3 AND 4)	SHORT TIME DELAY (APPROXIMATELY 10 SEC)		Z (NOTE 5)	1 TO 2	1 TO 2
	LONG TIME DELAY (APPROXIMATELY 30 SEC)				
DELAYED HOLD RELEASE	RELEASE OF HOLDING BRIDGE FROM CO OR PBX BY LINE CURRENT OPENS GREATER THAN	500 MILLISECONDS WHEN ASSOCIATED WITH NO. 1 ESS HAVING RESWITCH CAPABILITY * (USE 5 UF CAPACITOR, 601A OR EQUIVALENT) † (USE 1.62 UF CAPACITOR, 701G OR EQUIVALENT)	ZC (NOTE 6)	2 TO 3	
		50 MILLISECONDS WHEN ASSOCIATED WITH NO. 5 X-BAR CENTREX HAVING AUTOMATIC PERMANENT SIGNAL RELEASE * (USE 0.5 UF CAPACITOR, 575B OR EQUIVALENT) † (USE 0.162 UF CAPACITOR OR EQUIVALENT)	ZJ (NOTE 7)	2 TO 3	

* WHEN USED WITH Z OPTION
† WHEN USED WITH LONG TIME

Fig. 45—Connections From 400A, B, C, or D (MD) KTU (CO/PBX Line Circuit) in 69E or F Apparatus Mounting to External Connecting Blocks

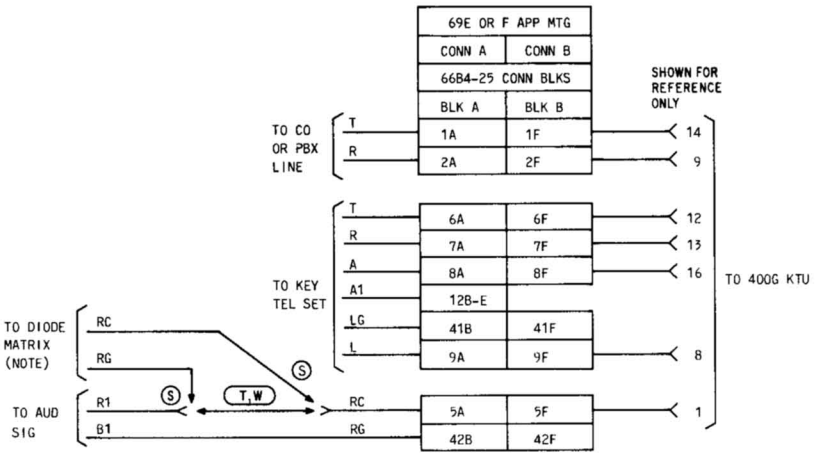

TOP VIEW OF OPTION BLOCK WITH HANDLE TOWARD USER. OPTION SYMBOLS SHOWN CONNECTED TO TERMINALS INDICATE FACTORY PROVIDED OPTIONS.

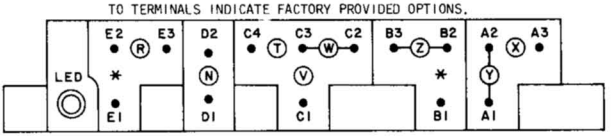

* OPTION PLUG STORAGE POSITION (FOR USE WHEN ASSOCIATED OPTION IS NOT REQUIRED).

OPTION	CONNECT OPTION PLUG TO TERMINALS	FACTORY PROVIDED
Z	B2-B3	✓
Y	A1-A2	✓
X	A2-A3	
T	C3-C4	
W	C2-C3	✓
V	C1-C3	
R	E2-E3	

OPTIONS

OPT	FEATURES		
Z	TIMEOUT	LONG TIME DELAY (APPROXIMATELY 20 SECONDS)	
		SHORT TIME DELAY (APPROXIMATELY 5 SECONDS)	
Y	VISUAL	LAMP WINK	
X	HOLD CKT	LAMP STEADY	
W	AUDIBLE SIGNAL	INTERRUPTED RING	
T		STEADY RING	
S		COMMON WITH DIODE MATRIX CONTROL	
V		COMMON WITH RELAY CONTROL	
R	DELAYED HOLD RELEASE	RELEASE OF HOLDING BRIDGE FROM CO OR PBX BY LINE CURRENT OPENS	MINIMUM OF 25 MS
			600 MS

RELAY	FUNCTION		
	INC RING CYCLE	ANS OR INIT CALL	HOLD
A	R	O	R
B	O	R	O
C	R	O	O
L	O*	R	O

R = RELEASED
O = OPERATE
* = FOLLOWS RINGING

NOTE:
DIODE MATRIX MUST BE SEPARATELY ORDERED AND INSTALLED.

Fig. 46—Connections From 400G (MD) KTU (CO/PBX Line Circuit) in 69E or F Apparatus Mounting to External Connecting Blocks

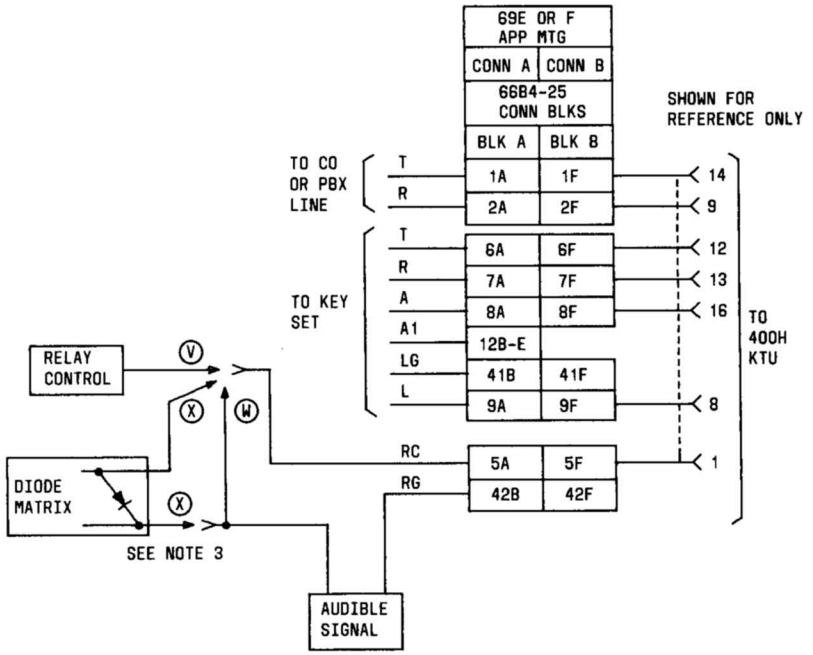

NOTES:
1. DIODE MATRIX MUST BE FURNISHED LOCALLY
2. RING TIME OUT IS NOT ADJUSTABLE, OCCURS IN 5 TO 8 1/2 SECONDS.
3. INSTALLER PROVIDED EXTERNAL PORTION OF OPTIONS.

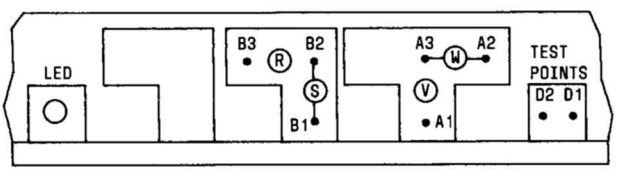

TOP VIEW OF OPTION - HANDLE ASSEMBLY. OPTIONS SYMBOLS SHOWN CONNECTED ARE FACTORY INSTALLED OPTIONS

OPTION	FEATURE	PLUG POSITION
W	INTERRUPTED RING	A2-A3*
V	COMMON AUDIBLE WITH RELAY CONTROL	A1-A3
X	COMMON AUDIBLE WITH DIODE MATRIX	A2-A3*
S	LONG HOLD RLSE #1 ESS, #2 ESS, 812 770, DIMENSION PBX	B1-B2*
R	SHORT HOLD RLSE ALL OTHERS	B2-B3

*FACTORY PROVIDED

Fig. 47—Connections From 400H KTU (CO/PBX Line Circuit) in 69E or F Apparatus Mounting to External Connecting Blocks

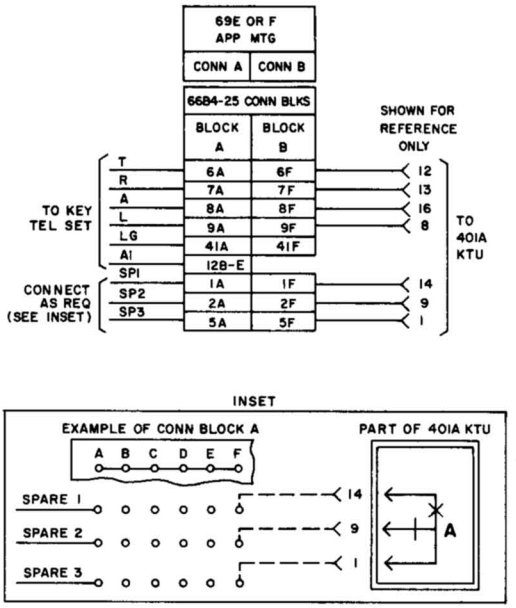

Fig. 48—Connections From 401A KTU (Manual Intercom Line Circuit) in 69E or F Apparatus Mounting to External Coonnecting Blocks

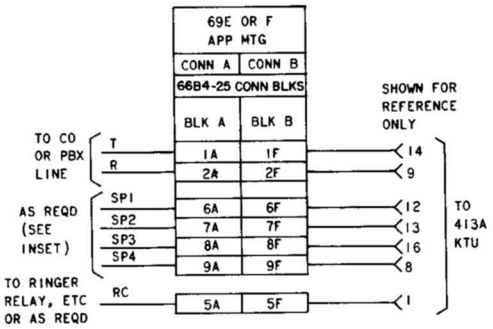

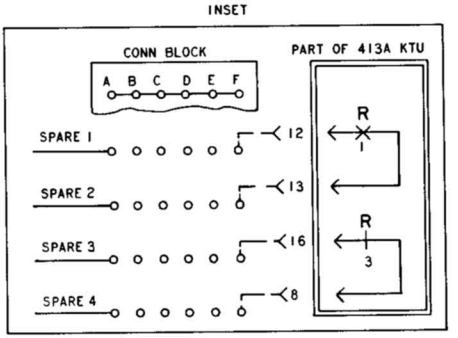

OPTION STRAPPING ON 413A KTU OPTION BLOCK

FEATURES		OPTION	STRAP TERMINALS
AUDIBLE SIGNALS	STEADY RING	X	9 TO 10
	INTERRUPTED RING	Z	8 TO 10

Fig. 49—Connections From 413A KTU (Auxiliary Ringup Circuit) in 69E or F Apparatus Mounting to External Connecting Blocks

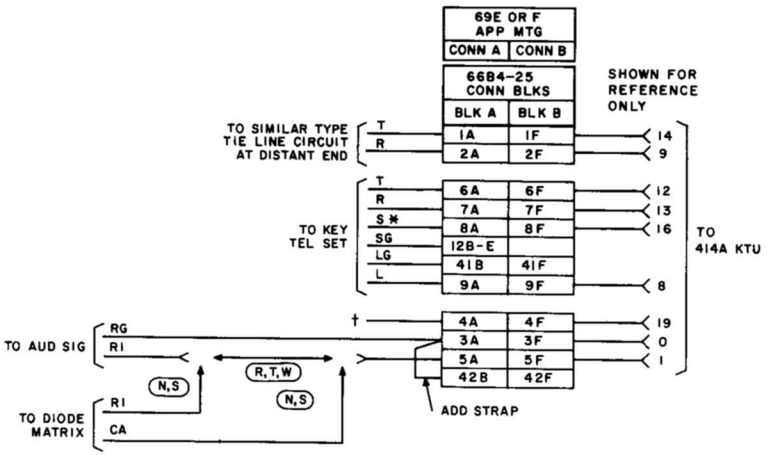

* SIGNAL KEY MAY BE A CONVERTED PICKUP KEY OR ANY EXTERNAL NONLOCKING KEY.

† SPARE A RELAY CONTACT (FOR CONTROL PURPOSE AS DESIRED).

OPTION STRAPPING ON 414A KTU OPTION BLOCK

FEATURES			OPTION	STRAP TERMINALS
AUDIBLE SIGNALS	UNDER CONTROL OF TIME-OUT CIRCUIT (B RELAY)	INTERRUPTED RING	W	7 TO 8
		STEADY RING	T	6 TO 7
		COMMON WITH DIODE MATRIX CONTROL	S	7 TO 8
	UNDER CONTROL OF R RELAY	STEADY RING	R	4 TO 6
		COMMON WITH DIODE MATRIX CONTROL	N	
TIME-OUT	10 SECONDS		X	1 TO 2
	16 SECONDS		Z	2 TO 3
	23 SECONDS		WITHOUT X OR Z	REMOVE X OR Z STRAPS
AUDIBLE RINGBACK TONE			M	9 TO 10

Fig. 50—Connections From 414A KTU (Manual Signaling, Ringdown Private Line Circuit) in 69E or F Apparatus Mounting to External Connecting Blocks

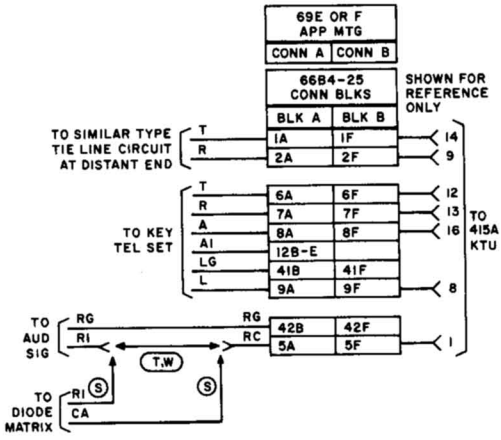

* FACTORY WIRED ON KTU

+ FOR IDLE LINE TERMINATION CONNECT A KS-13490,L1 910 OHM RESISTOR IN SERIES WITH A 542F, 2 UF CAPACITOR ACROSS TERMINALS 9 AND 10. ORDER COMPONENTS LOCALLY AND INSTALL.

OPTION STRAPPING ON 415A KTU OPTION BLOCK+

FEATURES		OPTION	STRAP TERMINALS
AUDIBLE SIGNALS	INTERRUPTED RING	W*	4 TO 6
	STEADY RING	T	5 TO 6
	COMMON WITH DIODE MATRIX CONTROL	S*	4 TO 6
AUDIBLE RINGBACK TONE		M*	1 TO 2
VISUAL HOLD SIGNAL		Y*	7 TO 8

Fig. 51—Connections From 415A KTU (Automatic, DC Signaling, Private Line Circuit) in 69E or F Apparatus Mounting to External Connecting Blocks

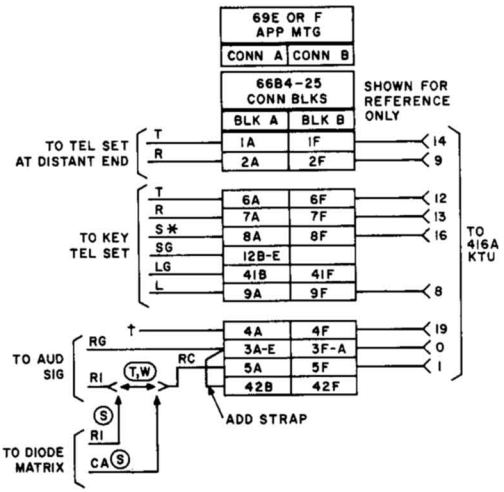

* SIGNAL KEY MAY BE A CONVERTED PICKUP KEY OR ANY EXTERNAL NONLOCKING KEY.

† SPARE CONTACT FOR CONTROL PURPOSES AS DESIRED.

✝ FACTORY WIRED ON KTU.

OPTION STRAPPING ON 416A KTU OPTION BLOCK

AUDIBLE SIGNALING		STRAP ON KTU
COMMON AUDIBLE WITH DIODE MATRIX	S ✝	5 TO 8
STEADY RING	T	7 TO 8
INTERRUPTED RING	W ✝	5 TO 8
AUDIBLE RINGBACK TONE	M ✝	9 TO 10

Fig. 52—Connections From 416A KTU (Station Line Circuit) in 69E or F Apparatus Mounting to External Connecting Blocks

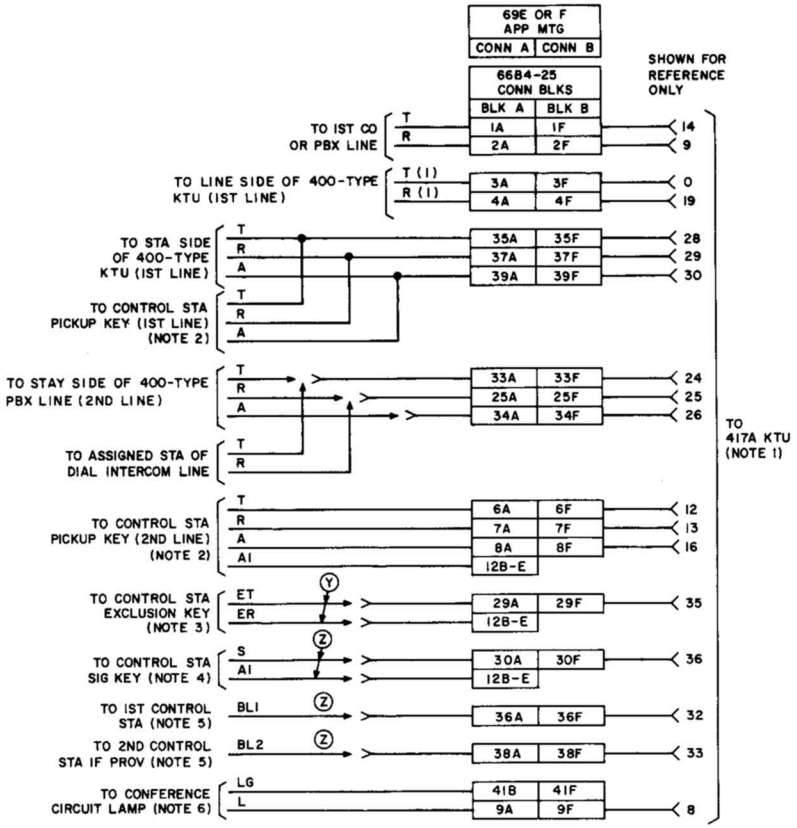

NOTES:

1. THE 417A KTU PROVIDES CONFERENCING BETWEEN:
   (A) 2 CO LINES
   (B) TWO PBX LINES
   (C) A CO OR PBX LINE (A LEAD REQUIRED) AND A DIAL INTERCOM LINE
2. ASSOCIATED LAMP LEADS FROM 400-TYPE KTUS OR INTERCOM CIRCUIT ARE RUN DIRECTLY TO THE TELEPHONE SET.
3. REMOVE AND INSULATE EXCLUSION KEY LEADS FROM IT AND IR IN TELEPHONE SET, IF CONNECTED.
4. SIGNAL KEY MAY BE CONVERTED PICKUP KEY OR AN EXTERNAL NONLOCKING KEY.
5. INSTALL A KS-21765, L1 DIODE IN "A" LEAD OF TELEPHONE SET WHEN CONFERENCE CIRCUIT IS CONTROLLED BY A NONLOCKING KEY. CONNECT IN ACCORDANCE WITH BUSY LAMP OPTION OF TELEPHONE SET INVOLVED.
6. LAMP INDICATES CONFERENCE CIRCUIT IS ACTIVATED.

OPTION STRAPPING ON 417A KTU OPTION BLOCK

FEATURES		OPTION	STRAP TERMINALS
ONE STATION	CONTROLLED BY NONLOCKING KEY	X	6 TO 10
TWO STATIONS		W*	4 TO 6, 8 TO 10
CONTROLLED BY EXCLUSION KEY		Y	3 TO 5
CONTROLLED BY NONLOCKING KEY		Z	1 TO 2

*INSTALL KS-21765, L1 DIODES OR EQUIVALENT (PROCURE LOCALLY) BETWEEN TERMINALS AS SHOWN.

Fig. 53—Connections From 417A KTU (Add-on Conference Circuit) in 69E or F Apparatus Mounting to External Connecting Blocks

NOTES:
1. THESE OPTIONS APPLY TO THE SIGNAL KEY AND AUDIBLE SIGNAL AT STA "B" ONLY. THE AUDIBLE SIGNAL AT STA "A" IS UNDER CONTROL OF RELAY "S". THE AUDIBLE SIGNAL AT STA "A" MAY BE PART OF A COMMON AUDIBLE ARRANGEMENT PROVIDED THE DIODE MATRIX IS USED FOR CONTROL.
2. THE AUDIBLE SIGNALS AT STA "A" AND "B" MAY BE PART OF A COMM AUD ARRANGEMENT PROVIDED THE DIODE MATRIX IS USED FOR CONTROL.

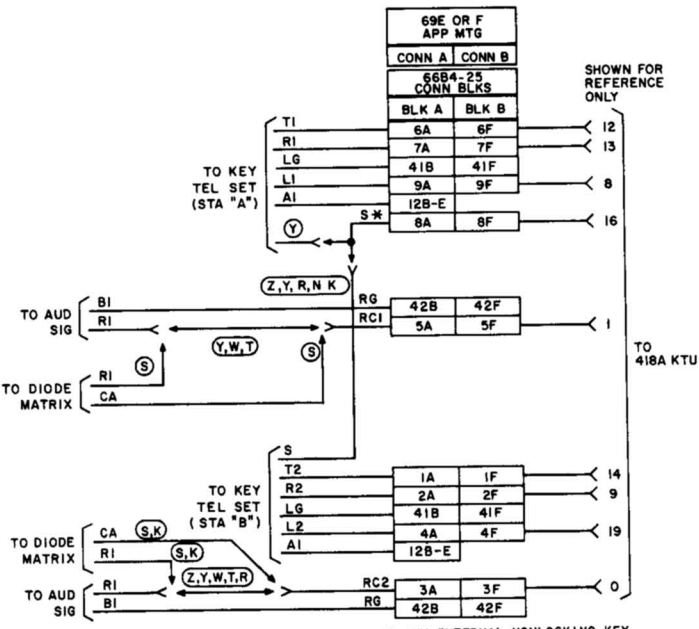

* SIGNAL KEY MAY BE A CONVERTED PICKUP KEY OR ANY EXTERNAL NONLOCKING KEY.

† USE CONTINUOUS METHOD OF STRAPPING.

OPTION STRAPPING ON 418A KTU OPTION BLOCK

FEATURES			OPTION	STRAP TERMINALS
AUDIBLE SIGNALS	TWO-WAY AUTOMATIC	INTERRUPTED RING	W	2 TO 3 TO 4†
		STEADY RING	T	1 TO 2 TO 4†
		COMMON WITH DIODE MATRIX CONTROL	S	2 TO 3 TO 4†
	ONE-WAY AUTOMATIC, ONE-WAY, MANUAL (NOTE 1)	INTERRUPTED RING	R	3 TO 4
		STEADY RING	Z	1 TO 4
		COMMON WITH DIODE MATRIX CONTROL	K	3 TO 4
	TWO-WAY MANUAL (NOTE 2)		Y	
AUDIBLE RING-BACK	TWO-WAY AUTOMATIC		Q	9 TO 10, 5 TO 7 TO 8†
	ONE-WAY AUTOMATIC, ONE-WAY MANUAL		H	5 TO 7, 9 TO 10
	TWO-WAY MANUAL		M	9 TO 10

Fig. 54—Connections From 418A KTU (Short Range, DC Signaling, Private Line Circuit) in 69E or F Apparatus Mounting to External Connecting Blocks

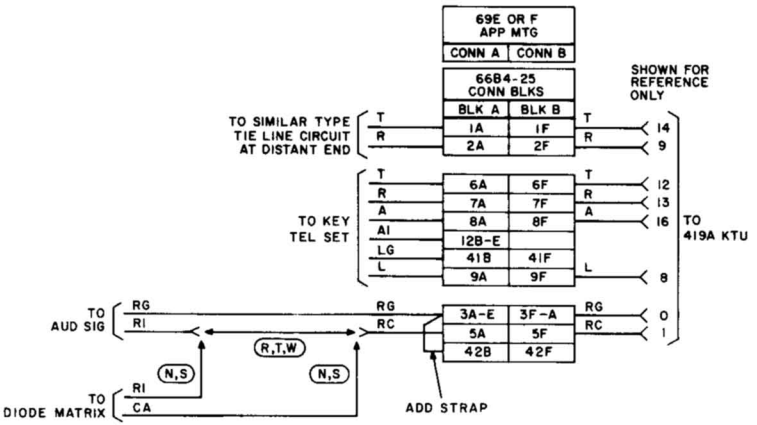

OPTION STRAPPING ON 419A KTU OPTION BLOCK

FEATURES			OPTION	STRAP TERMINALS
AUDIBLE SIGNALS	UNDER CONTROL OF TIME-OUT CIRCUIT (B RELAY)	INTERRUPTED RING	W	6 TO 8
		STEADY RING	T	5 TO 6
		COMMON WITH DIODE MATRIX CONTROL	S	6 TO 8
	UNDER CONTROL OF R RELAY	STEADY RING	R	3 TO 5
		COMMON WITH DIODE MATRIX CONTROL	N	
TIME-OUT	6 SECONDS		X	9 TO 10
	17 SECONDS		Z	7 TO 10
	25 SECONDS		WITHOUT X OR Z	REMOVE X OR Z STRAPS
AUDIBLE RINGBACK TONE			M	1 TO 2

Fig. 55—Connections From 419A KTU (Automatic Signaling, Ringdown Private Line Circuit) in 69E or F Apparatus Mounting to External Connecting Blocks

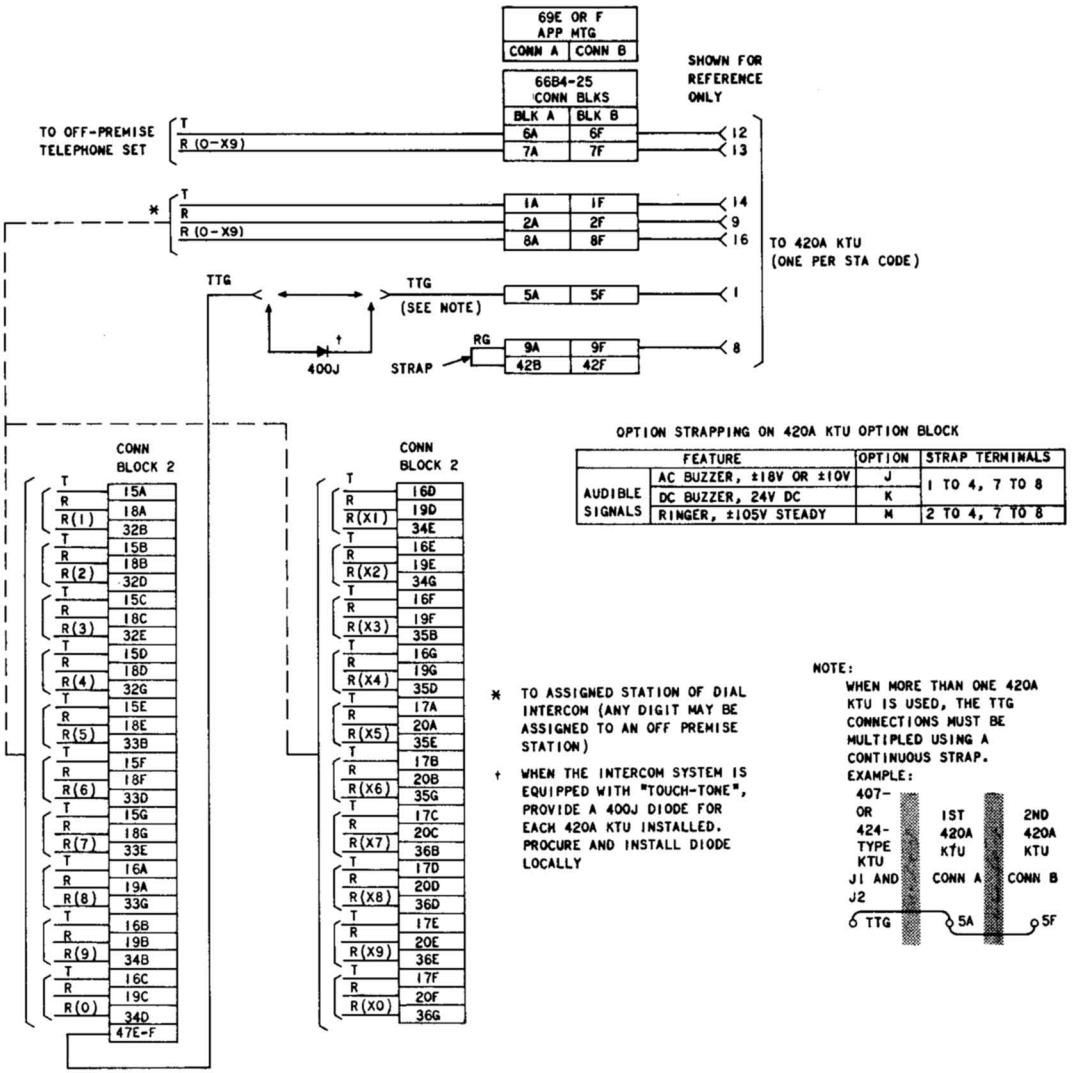

OPTION STRAPPING ON 420A KTU OPTION BLOCK

FEATURE		OPTION	STRAP TERMINALS
AUDIBLE SIGNALS	AC BUZZER, ±18V OR ±10V	J	1 TO 4, 7 TO 8
	DC BUZZER, 24V DC	K	
	RINGER, ±105V STEADY	M	2 TO 4, 7 TO 8

Fig. 56—Connections From 420A KTU (Dial Intercom, Long Line Circuit) in 69E or F Apparatus Mounting to External Connecting Blocks

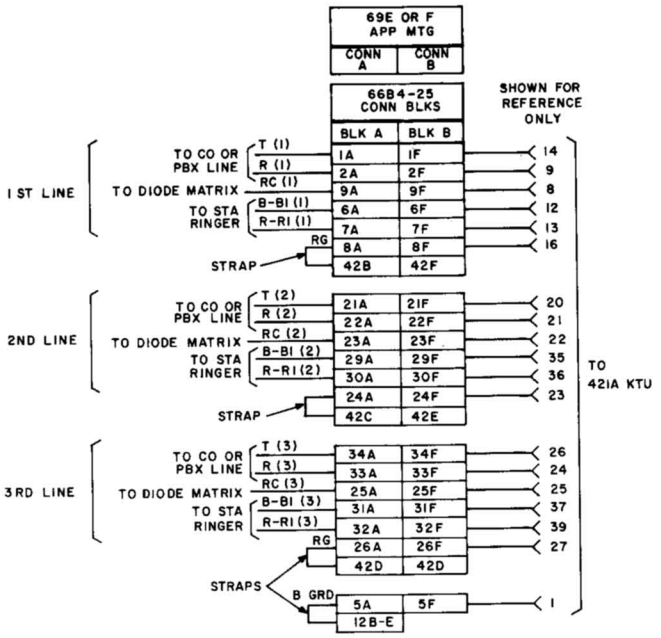

OPTION STRAPPING ON 421A KTU OPTION BLOCK

FEATURE	OPTION	STRAP TERMINALS
GENERAL PURPOSE	W	1 TO 2 5 TO 6 7 TO 8

Fig. 57—Connections From 421A KTU (Power Failure Transfer Circuit) in 69E or F Apparatus Mounting to External Connecting Blocks

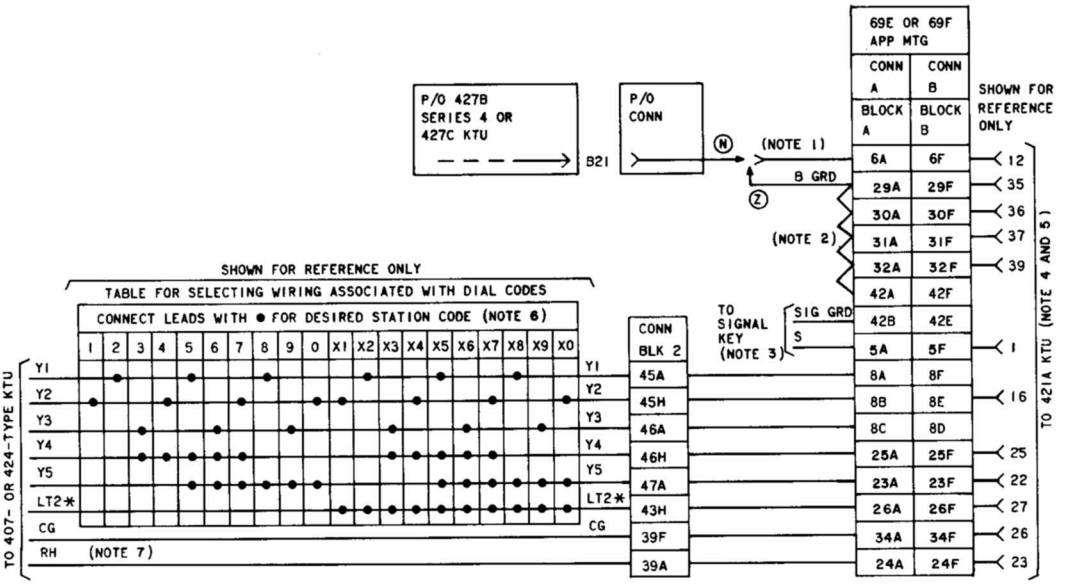

NOTES:

1. (N) WITH "TOUCH-TONE"
   (Z) WITHOUT "TOUCH-TONE"
2. USE CONTINUOUS METHOD OF STRAPPING ON CONNECTING BLOCKS FOR B GROUND.
3. PROVIDE SEPARATE SIGNAL KEY FOR EACH STATION CODE TO BE SELECTED.
4. PROVIDE A SEPARATE 421A KTU FOR EACH STATION CODE TO BE SELECTED.
5. IF MORE THAN ONE 421A KTU IS USED FOR DSS, CONNECT AS SHOWN:

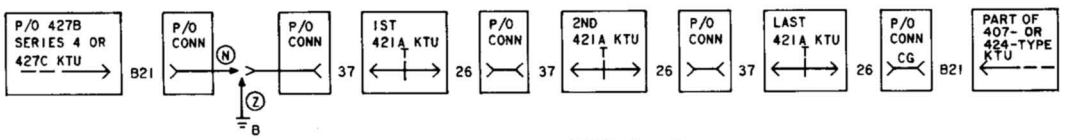

6. SELECT CODE AND CONNECT LEADS FOR SELECTED CODE AS SHOWN IN VERTICAL COLUMN.
7. A 400J DIODE (PROCURE LOCALLY) MUST BE CONNECTED AS SHOWN BELOW BETWEEN THE LK AND RH TERMINALS OF THE 407- OR 424-TYPE KTU WHEN PROVIDING DIAL TONE.

LK —▶|— RH

* 424-TYPE KTU ONLY

Fig. 58—Connections From 421A KTU (DSS Feature of Dial Intercom) in 69E or F Apparatus Mounting to External Connecting Blocks

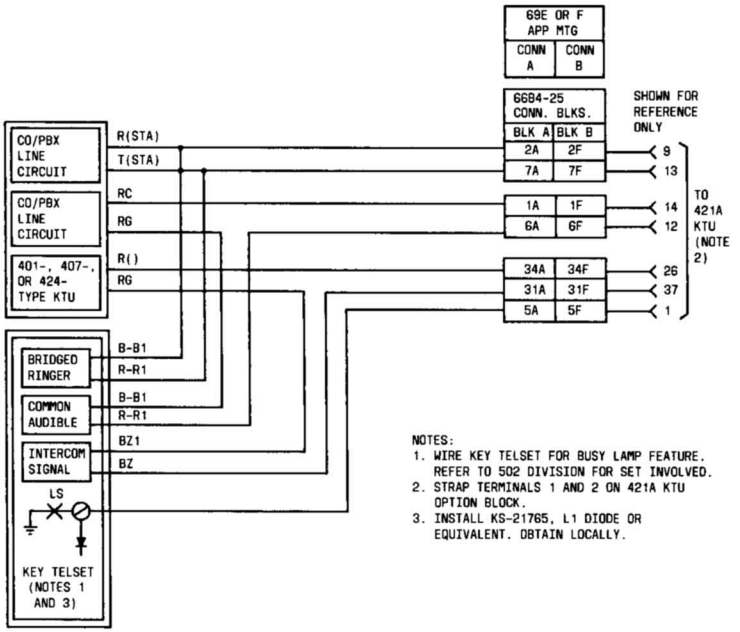

Fig. 59—Connections From 421A KTU (Audible Signal Suppression) in 69E or F Apparatus Mounting to External Connecting Blocks

OPTION STRAPPING ON 421A KTU OPTION BLOCK

FEATURE	OPTION	STRAP TERMINALS
PRESET CONFERENCE	W	1 TO 2 7 TO 8

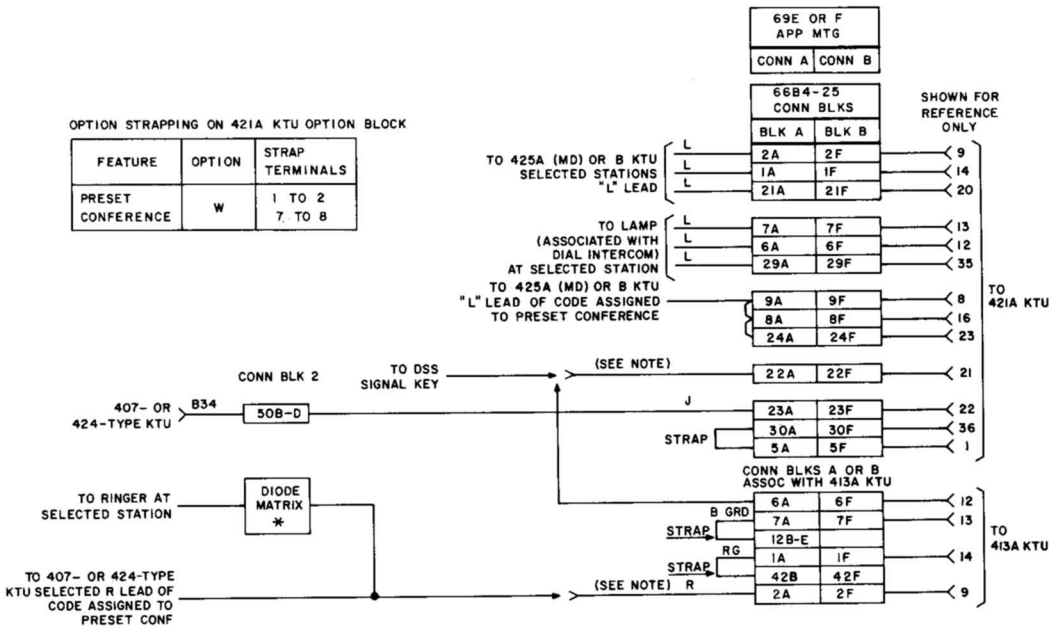

NOTE:

THE 413A KTU IS USED ONLY WHEN ACCESS TO THE PRESET CONFERENCE IS BY DIAL CODE OR BY DIAL CODE AND DSS. THE 413A KTU IS NOT USED WHEN ACCESS TO THE PRESET CONFERENCE IS LIMITED TO DSS. SEE FUNCTIONAL SCHEMATIC.

* MUST BE FURNISHED LOCALLY.

Fig 60—Connections From 421A KTU (Preset Conference Circuit) to Dial Intercom Line in 69E or F Apparatus Mounting to External Connecting Blocks

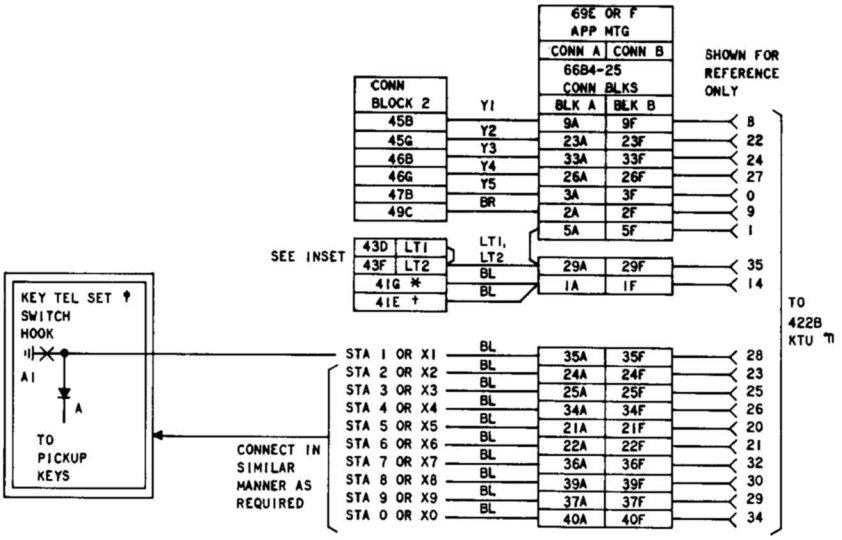

* FOR UNITS 422B KTU
† FOR TENS 422B KTU
♦ FOR CONNECTION OF DIODE IN THE "A" LEAD, USE THE STATION BUSY OPTION AS SHOWN IN THE CONNECTION SECTION OF TYPE SET USED.
¶ PROVIDE A SEPARATE 422B KTU FOR THE UNITS GROUP (1-0, SINGLE-DIGIT NOS.) AND FOR THE TENS GROUP (X1-X0, TWO-DIGIT NOS.)+

OPTION STRAPPING ON 422B KTU OPTION BLOCK

FEATURE	OPTION	STRAP TERMINALS
STATION BUSY TONE	R	6 TO 8

441J OR EQUIVALENT DIODE AS SHOWN

INSET

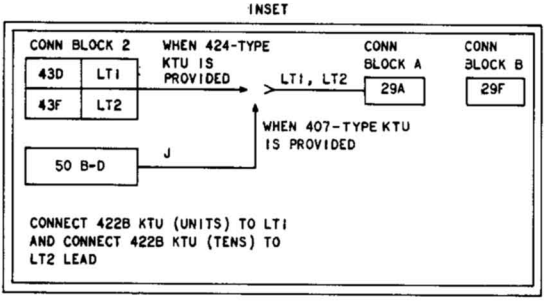

Fig. 61—Connections From 422A (MD) or 422B KTU (Dial Intercom, Station Busy Selector Circuit) in 69E or F Apparatus Mounting to External Connecting Blocks

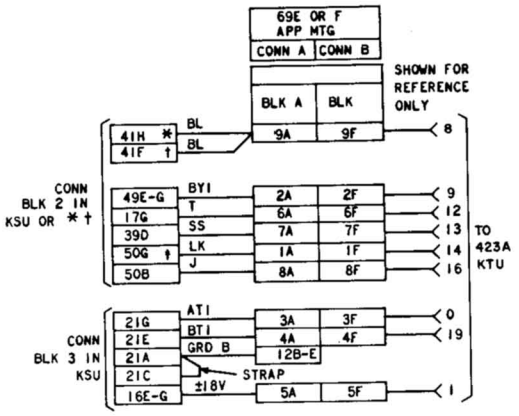

* TO CONNECTING BLOCK TERMINAL ASSOCIATED WITH MOUNTING FACILITY FOR UNITS 422B KTU.

† TO CONNECTING BLOCK TERMINAL ASSOCIATED WITH MOUNTING FACILITY FOR TENS 422B KTU.

† WHEN ADDING THE 423A KTU TO A SYSTEM EQUIPPED FOR "TOUCH-TONE" (426A AND 427B (SERIES 4) OR C KTUS). A 400J DIODE MUST BE INSTALLED BETWEEN THE "RH" AND "LK" LEADS OF THE 407- OR 424-TYPE KTU. REWIRE AS FOLLOWS:

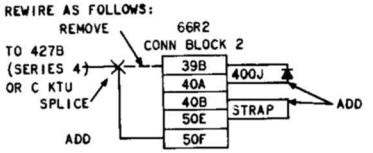

IF THE SYSTEM IS EQUIPPED WITH DSS (421A KTU), REWIRE "RH" LEADS BY TERMINATING ONE LEAD TO TERMINAL 50F AND THE OTHER LEAD TO A 183A2 ADAPTER INSTALLED OVER TERMINALS 50G AND 50H.

OPTION STRAPPING ON 423A KTU OPTION BLOCK

OPTION	FEATURES	STRAP TERMINALS
T	DIAL TONE	1 TO 2
R	STATION BUSY TONE	4 TO 6
S	AUDIBLE RINGBACK	§

§ REQUIRES NO STRAPPING ON KTU

Fig. 62—Connections From 423A KTU (Dial Intercom, Audible Ringback, Dial and Busy Tone Circuit) in 69E and F Apparatus Mounting to External Connecting Blocks

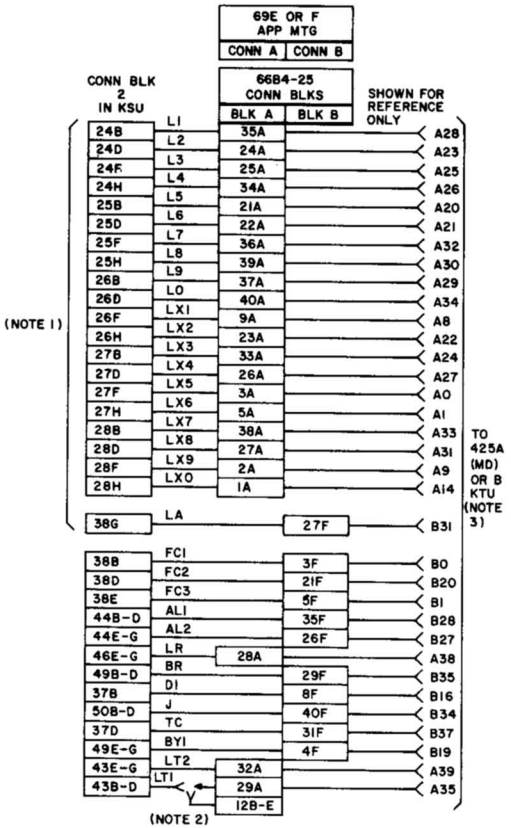

NOTES:

1. REMOVE FACTORY FURNISHED STRAPS FROM THESE TERMINALS.
2. WHEN 407-TYPE KTU IS PROVIDED STRAP TO B GRD. WHEN 424-TYPE KTU IS PROVIDED STRAP TO TERMINAL 43B-D OF CONN BLK 2 IN THE KSU.
3. WHEN THE 425A (MD) OR B KTU IS INSTALLED IN A 69E OR 69F APPARATUS MOUNTING, THE FOLLOWING LEADS MUST BE INSULATED AND STORED: THE S-BK AND Y-BL LEADS IN THE BL-W BINDER; THE BK-O, Y-O, BK-G, AND BL-Y LEADS IN THE G-W BINDER.

Fig. 63—Connections From 425A (MD) or 425B KTU (Dial Intercom, Flashing Lamp Circuit) in 69E or F Apparatus Mounting to External Connecting Blocks

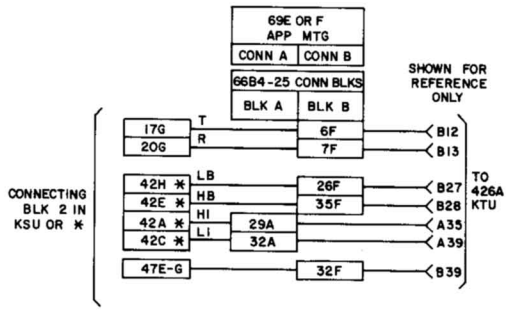

* TO CONNECTING BLOCK TERMINAL ASSOCIATED WITH MOUNTING FACILITY FOR 427B (SERIES 4) OR C KTU, IF EXTERNAL.

Fig. 64—Connections From 426A KTU (Part of TOUCH-TONE Adapter Circuit) in 69E or F Apparatus Mounting to External Connecting Blocks

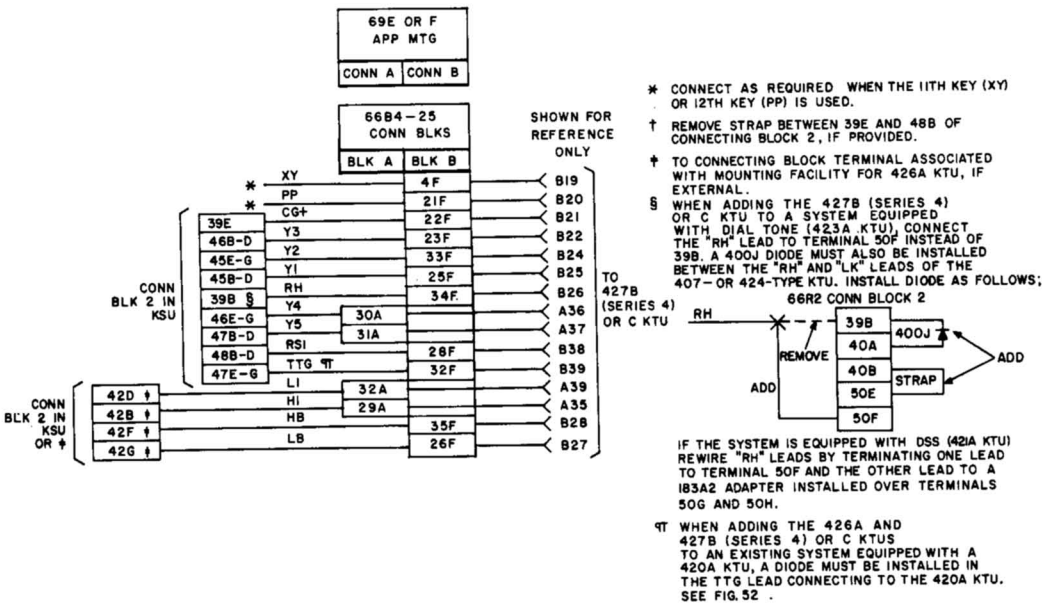

Fig. 65—Connections From 427B (Series 4) or C KTU (Part of TOUCH-TONE Adapter Circuit) in 69E or F Apparatus Mounting to External Connecting Blocks

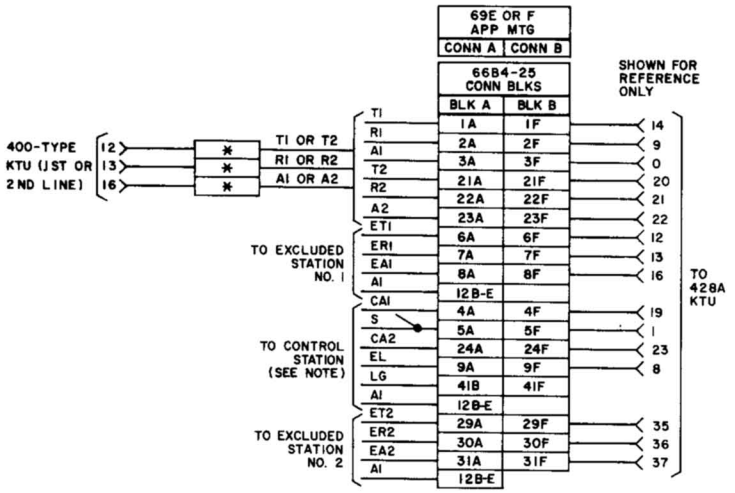

NOTE:

"S" LEAD CAN ONLY MULTIPLE TO OTHER 428A KTUS CONTROLLED BY THE SAME STATION.

* TO CONNECTING BLOCK TERMINAL ASSOCIATED WITH MOUNTING FACILITY FOR 400-TYPE KTU.

Fig. 66—Connections From 428A KTU (Multiline Exclusion Circuit) in 69E or F Apparatus Mounting to External Connecting Blocks

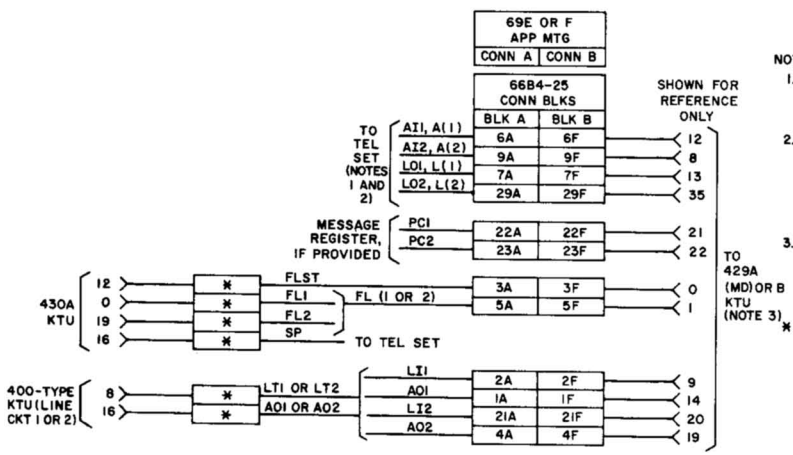

NOTES:

1. FOR PRIORITY HOLD, THE A AND L LEADS FROM EACH TEL SET CONNECT THROUGH THE 429A (MD) OR B KTU TO THE 400-TYPE KTU.
2. FOR I HOLD, THE A AND L LEADS FROM THE TEL SET SELECTED FOR I HOLD CONNECT THROUGH THE 429A (MD) OR B KTU TO THE 400-TYPE KTU. THE A AND L LEADS FROM THE OTHER TEL SETS CONNECT DIRECTLY TO THE 400-TYPE KTU.
3. THE 429A (MD) OR B KTU WILL PROVIDE SUPPLEMENTARY HOLD FOR TWO CO OR PBX LINE CIRCUITS. EACH HOLD CIRCUIT MAY BE ASSIGNED AS PRIORITY OR I HOLD.

* TO CONNECTING BLOCK TERMINAL ASSOCIATED WITH MOUNTING FACILITY FOR 430A OR 400-TYPE KTUS.

Fig. 67—Connections From 429A (MD) or 429B KTU (Supplementary Hold Detector Circuit) in 69E or F Apparatus Mounting to External Connecting Blocks

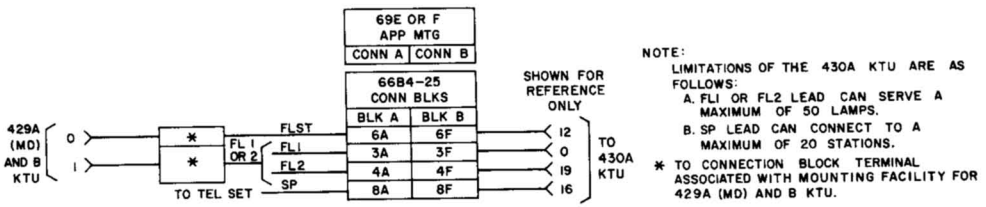

Fig. 68—Connections From 430A KTU (Flutter Generator Circuit) in 69E or F Apparatus Mounting to External Connecting Blocks

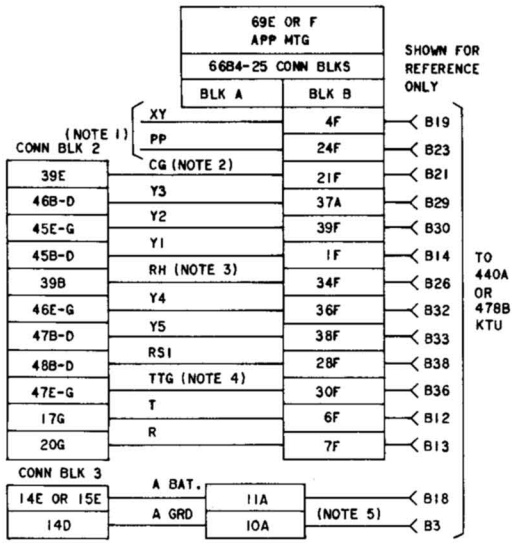

NOTES:

1. CONNECT AS REQUIRED WHEN THE 11TH KEY (XY) OR 12TH KEY (PP) IS USED.
2. REMOVE STRAP BETWEEN 39E AND 48B OF CONNECTING BLOCK 2, IF PROVIDED.
3. WHEN ADDING THE 440 OR 478B KTU TO A SYSTEM EQUIPPED WITH DIAL TONE(423A KTU), CONNECT THE "RH" LEAD TO TERMINAL 50F INSTEAD OF 39B. A 400J DIODE MUST ALSO BE INSTALLED BETWEEN THE "RH" AND "LK" LEADS OF THE 407- OR 424-TYPE KTU. INSTALL DIODE AS FOLLOWS:

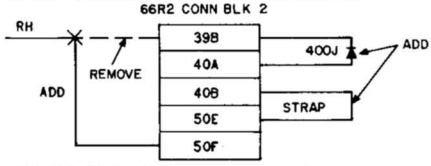

IF THE SYSTEM IS EQUIPPED WITH DSS (421A KTU) REWIRE "RH" LEADS BY TERMINATING ONE LEAD TO TERMINAL 50F AND THE OTHER LEAD TO A 183A2 ADAPTER INSTALLED OVER TERMINALS 50G AND 50H.

4. WHEN ADDING THE 440A KTU TO AN EXISTING SYSTEM EQUIPPED WITH A 420A KTU, A DIODE MUST BE INSTALLED IN THE TTG LEAD CONNECTING TO THE 420A KTU. SEE FIG. COVERING CONNECTIONS OF THE 420A KTU.
5. REQUIRED FOR 478B KTU ONLY.

Fig. 69—Connections From 440A (MD) or 478B KTU (TOUCH-TONE Adapter Circuit) in 69E or F Apparatus Mounting to External Connecting Blocks

SELECT JACK ASSOCIATED WITH 400-TYPE KTU AND CONNECT AS SHOWN

	CONNECTING BLOCK															
	1							2	3							
	J1	J2	J3	J4	J5	J6	J7	J8	J11	J12	J13	J14	J15	J16	J17	J18
	1B	7B	13B	19B	25B	31B	37B	1B	1B	7B	13B	19B	25B	31B	37B	43B
	2B	8B	14B	20B	26B	32B	38B	2B	2B	8B	14B	20B	26B	32B	38B	44B
	6B	12B	18B	24B	30B	36B	42B	6B	6B	12B	18B	24B	30B	36B	42B	48B
	6G*	12G*	18G*	24G*	30G*	36G*	42G*	6G*	6G*	12G*	18G*	24G*	30G*	36G*	42G*	48G*
TO PRINCIPAL TEL SETS — T(P1 OR P2)	1C	7C	13C	19C	25C	31C	37C	1C	1C	7C	13C	19C	25C	31C	37C	43C
R(P1 OR P2)	2C	8C	14C	20C	26C	32C	38C	2C	2C	8C	14C	20C	26C	32C	38C	44C
A(P1 OR P2)	3C	9C	15C	21C	27C	33C	39C	3C	3C	9C	15C	21C	27C	33C	39C	45C
A1(P1 OR P2)	4C	10C	16C	22C	28C	34C	40C	4C	4C	10C	16C	22C	28C	34C	40C	46C
LG(P1 OR P2)	5C	11C	17C	23C	29C	35C	41C	5C	5C	11C	17C	23C	29C	35C	41C	47C
RG(P1 OR P2)	5G*	11G*	17G*	23G*	29G*	35G*	41G*	5G*	5G*	11G*	17G*	23G*	29G*	35G*	41G*	47G*
L(P1 OR P2)	6C	12C	18C	24C	30C	36C	42C	6C	6C	12C	18C	24C	30C	36C	42C	48C
RC(P1)																
RC(P2)																
RG																
TO ATTENDANT STATION — T	1D	7D	13D	19D	25D	31D	37D	1D	1D	7D	13D	19D	25D	31D	37D	43D
R	2D	8D	14D	20D	26D	32D	38D	2D	2D	8D	14D	20D	26D	32D	38D	44D
A	3D	9D	15D	21D	27D	33D	39D	3D	3D	9D	15D	21D	27D	33D	39D	45D
A1	4D	10D	16D	22D	28D	34D	40D	4D	4D	10D	16D	22D	28D	34D	40D	46D
LG	5D	11D	17D	23D	29D	35D	41D	5D	5D	11D	17D	23D	29D	35D	41D	47D
L(AT1)																
L(AT2)																
RC																

NOTES:
1. 448A KTU CONTAINS TWO CIRCUITS.
2. PLACE STRAP ON 400-TYPE KTUS AS FOLLOWS:
   - 400B AND C - STRAP TERMINAL 3 TO 6
   - 400D - STRAP TERMINAL 4 TO 8
   - 400G - CONNECT TERMINAL C1 TO C3
3. TO 400-TYPE KTU ASSOCIATED WITH FIRST CIRCUIT OF 448A KTU.
4. TO 400-TYPE KTU ASSOCIATED WITH SECOND CIRCUIT OF 448A KTU.

* USE 183A2 ADAPTER TO MULTIPLE LEADS
† TO 449A KTU OR TURN KEY IF IMMEDIATE RINGER TRANSFER IS REQUIRED.
‡ TO FIRST AND SECOND PRINCIPAL TEL SETS IF COMMON AUDIBLE IS TO BE USED AND RINGER IS NOT TO BE CUT OFF.

OPTION STRAPPING ON 448A KTU OPTION BLOCK

	OPTION	FEATURE	STRAP TERMINALS	
			1ST CKT	2ND CKT
AUDIBLE SIGNALS	W	INTERRUPTED RING	8 TO 7§	3 TO 5§
	T	STEADY RING	8 TO 6	3 TO 4
	X	STEADY BUZZER	8 TO 10	3 TO 1

§ FACTORY PROVIDED

Fig. 70—Connections From 448A KTU (Variable Delay Timer Circuit) in 69E or F Apparatus Mounting to External Connecting Blocks (Sheet 1 of 2)

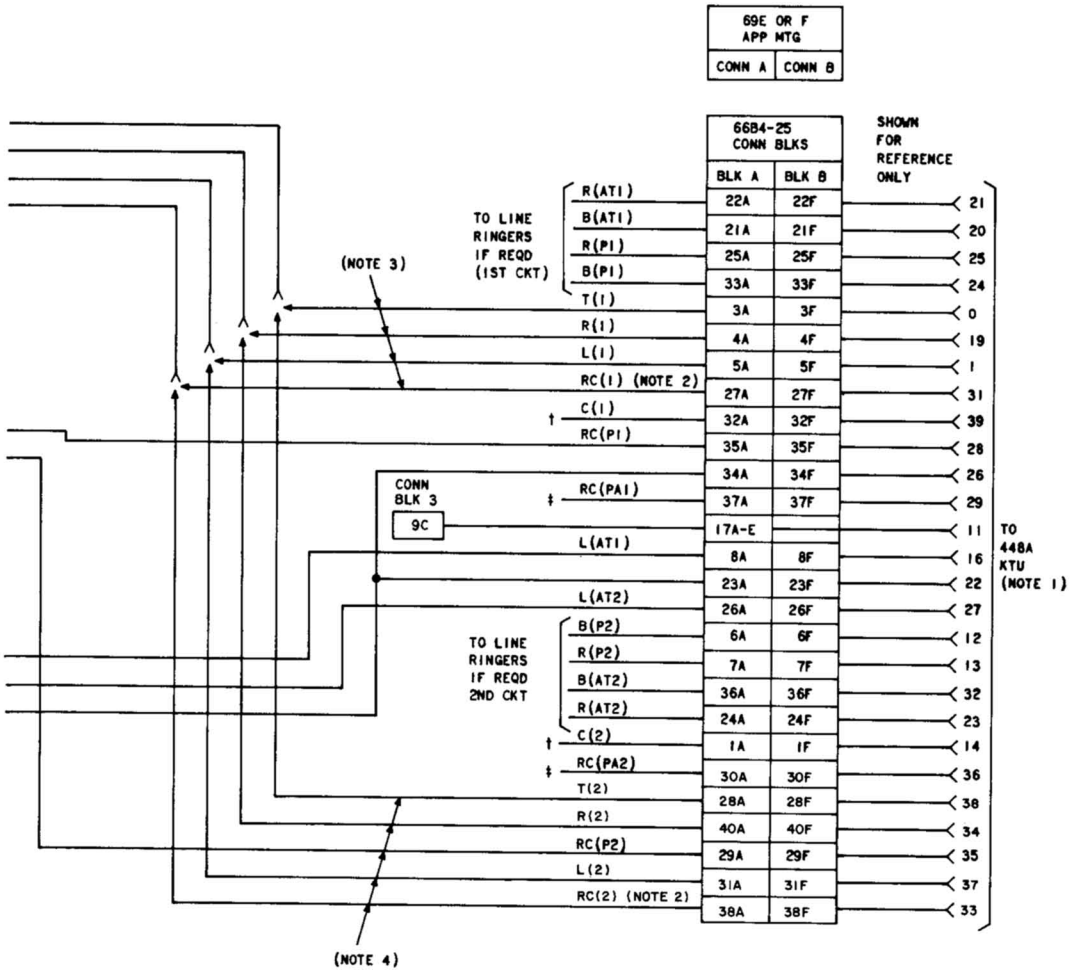

Fig. 70—Connections From 448A KTU (Variable Delay Timer Circuit) in 69E or F Apparatus Mounting to External Connecting Blocks (Sheet 2 of 2)

SELECT JACK ASSOCIATED WITH 400-TYPE KTU AND CONNECT AS SHOWN															
CONNECTING BLOCK															
1							2	4							
J1	J2	J3	J4	J5	J6	J7	J8	J11	J12	J13	J14	J15	J16	J17	J18
1B	7B	13B	19B	25B	31B	37B	1B	1B	7B	13B	19B	25B	31B	37B	43B
2B	8B	14B	20B	26B	32B	38B	2B	2B	8B	14B	20B	26B	32B	38B	44B
5G‡	11G‡	17G‡	23G‡	29G‡	35G‡	41G‡	5G‡	5G‡	11G‡	17G‡	23G‡	29G‡	35G‡	41G‡	47G‡
6B	12B	18B	24B	30B	36B	42B	6B	6B	12B	18B	24B	30B	36B	42B	48B
6G‡	12G‡	18G‡	24G‡	30G‡	36G‡	42G‡	6G‡	6G‡	12G‡	18G‡	24G‡	30G‡	36G‡	42G‡	48G‡

R* OR RC† (P1)

B* OR RG† (P1)

TO ATTENDANT STATION

T	1C	7C	13C	19C	25C	31C	37C	1C	1C	7C	13C	19C	25C	31C	37C	43C
R	2C	8C	14C	20C	26C	32C	38C	2C	2C	8C	14C	20C	26C	32C	38C	44C
A	3C	9C	15C	21C	27C	33C	39C	3C	3C	9C	15C	21C	27C	33C	39C	45C
A1	4C	10C	16C	22C	28C	34C	40C	4C	4C	10C	16C	22C	28C	34C	40C	46C
LG	5C	11C	17C	23C	29C	35C	41C	5C	5C	11C	17C	23C	29C	35C	41C	47C
L(1)	6C	12C	18C	24C	30C	36C	42C	6C	6C	12C	18C	24C	30C	36C	42C	48C
SG(P1 AND P2)	4D	10D	16D	22D	28D	34D	40D	4D	4D	10D	16D	22D	28D	34D	40D	46D

S(P1)

LG(P1 AND P2)	5D	11D	17D	23D	29D	35D	41D	5D	5D	11D	17D	23D	29D	35D	41D	47D

L(P1)

B* OR RG† (P2)

R* OR RC† (P2)

L(P2)

S(P2)

TO ATTENDANT STATION

T	1D	7D	13D	19D	25D	31D	37D	1D	1D	7D	13D	19D	25D	31D	37D	43D
R	2D	8D	14D	20D	26D	32D	38D	2D	2D	8D	14D	20D	26D	32D	38D	44D
A	3D	9D	15D	21D	27D	33D	39D	3D	3D	9D	15D	21D	27D	33D	39D	45D
A1	4D	10D	16D	22D	28D	34D	40D	4D	4D	10D	16D	22D	28D	34D	40D	46D
LG	5E	11E	17E	23E	29E	35E	41E	5E	5E	11E	17E	23E	29E	35E	41E	47E

R* OR RC†

B* OR RG†

L(AT1)

L(AT2)

NOTES:
1. 449A KTU CONTAINS TWO CIRCUITS.
2. CONNECT B GRD ONLY IF 448A KTU IS PROVIDED. IF 448A KTU IS PROVIDED, NONE OF THE RINGER CONNECTIONS ARE REQUIRED.
3. TO 400-TYPE KTU ASSOCIATED WITH FIRST CIRCUIT OF 449A KTU.
4. TO 400-TYPE KTU ASSOCIATED WITH SECOND CIRCUIT OF 449A KTU.
5. PLACE STRAP ON 400-TYPE KTU AS FOLLOWS:
   - 400B AND C - STRAP TERMINAL 4 TO 6
   - 400D - STRAP TERMINAL 6 TO 8
   - 400G - CONNECT TERMINAL C3 TO C4

* FOR LINE RINGING
† FOR COMMON AUDIBLE RINGING
‡ USE 183A2 ADAPTER TO MUTLIPLE LEADS

Fig. 71—Connections From 449A KTU (Immediate Transfer Control Circuit) in 69E or F Apparatus Mounting to External Connecting Blocks (Sheet 1 of 2)

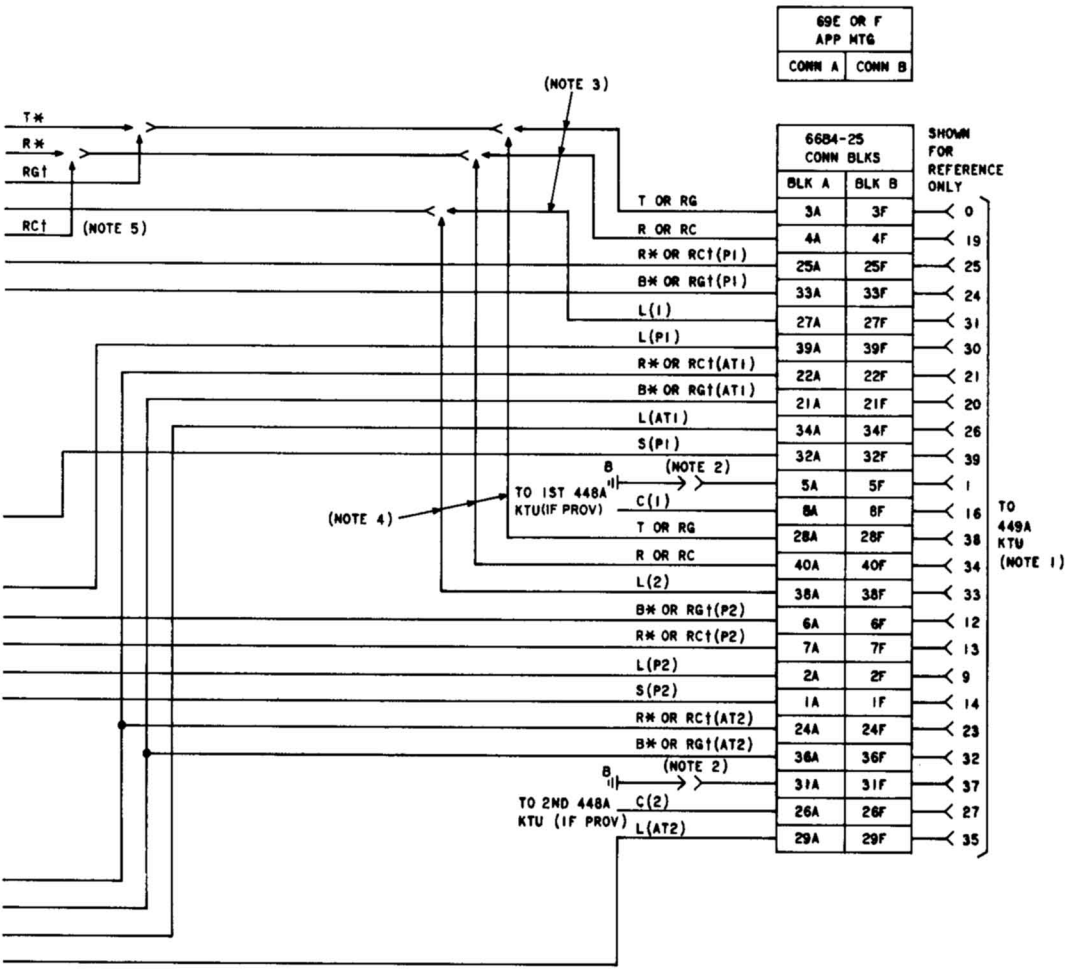

Fig. 71—Connections From 449A KTU (Immediate Transfer Control Circuit) in 69E or F Apparatus Mounting to External Connecting Blocks (Sheet 2 of 2)

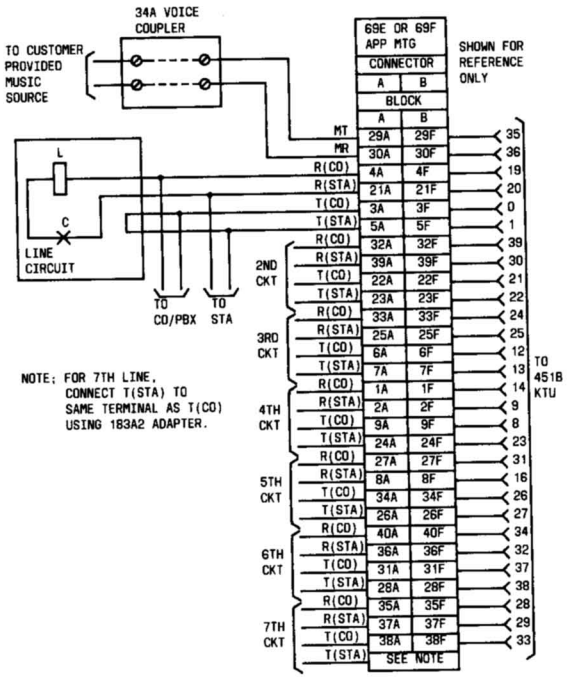

Fig. 72—Connections From 451B KTU (Music-On-Hold) in 69E or F Apparatus Mounting to External Connecting Block

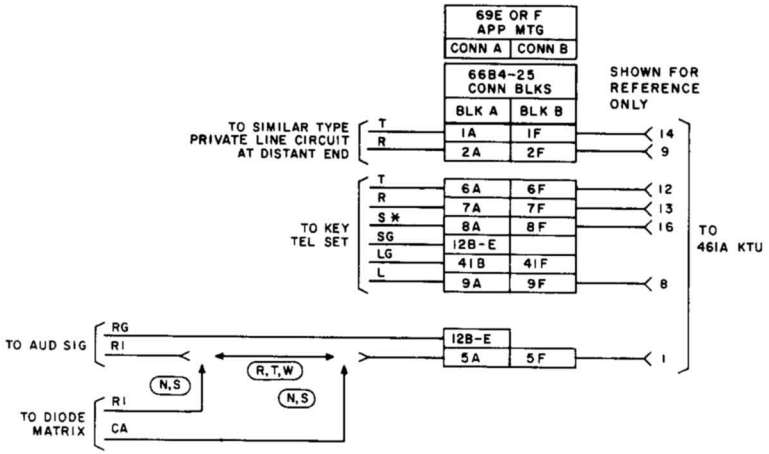

* SIGNAL KEY MAY BE A CONVERTED PICKUP KEY OR ANY EXTERNAL NONLOCKING KEY.

OPTION STRAPPING ON 461A KTU OPTION BLOCK

FEATURES			OPTION	STRAP TERMINALS
AUDIBLE SIGNALS	UNDER CONTROL OF TIME-OUT CIRCUIT (B RELAY)	INTERRUPTED RING	W	7 TO 8
		STEADY RING	T	6 TO 7
		COMMON WITH DIODE MATRIX CONTROL	S	7 TO 8
	UNDER CONTROL OF R RELAY	STEADY RING	R	4 TO 6
		COMMON WITH DIODE MATRIX CONTROL	N	
TIME-OUT	10 SECONDS		X	1 TO 2
	16 SECONDS		Z	2 TO 3
	23 SECONDS		WITHOUT X OR Z	REMOVE X OR Z STRAPS
AUDIBLE RINGBACK TONE			M	9 TO 10

Fig. 73—Connections From 461A KTU (Manual Signaling, Ringdown Private Line Circuit) in 69E or F Apparatus Mounting to External Connecting Blocks

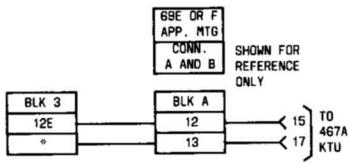

NOTE: B BATT AND B GRD ARE ONLY LEADS REQUIRED.

* CONNECT TO ANY UNUSED A1 TERMINAL ON BLOCKS 1, 2, OR 4.

Fig. 74—Connections From 467A KTU (Low-Voltage Monitor Circuit) in 69E or F Apparatus Mounting to External Connecting Blocks

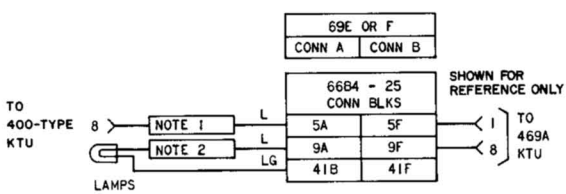

NOTES:

1. LAMP CIRCUIT TO BE EXTENDED. TO CONNECTING BLOCK TERMINAL ASSOCIATED WITH THE MOUNTING FACILITY FOR 400-TYPE KTU.
2. EXTENDED LAMP CIRCUIT TO ADDITIONAL LAMPS. USE ONE 469A KTU FOR EACH 20 ADDITIONAL LAMPS.

Fig. 75—Connections From 469A KTU (Lamp Extender Circuit) in 69E or F Apparatus Mounting to External Connecting Blocks

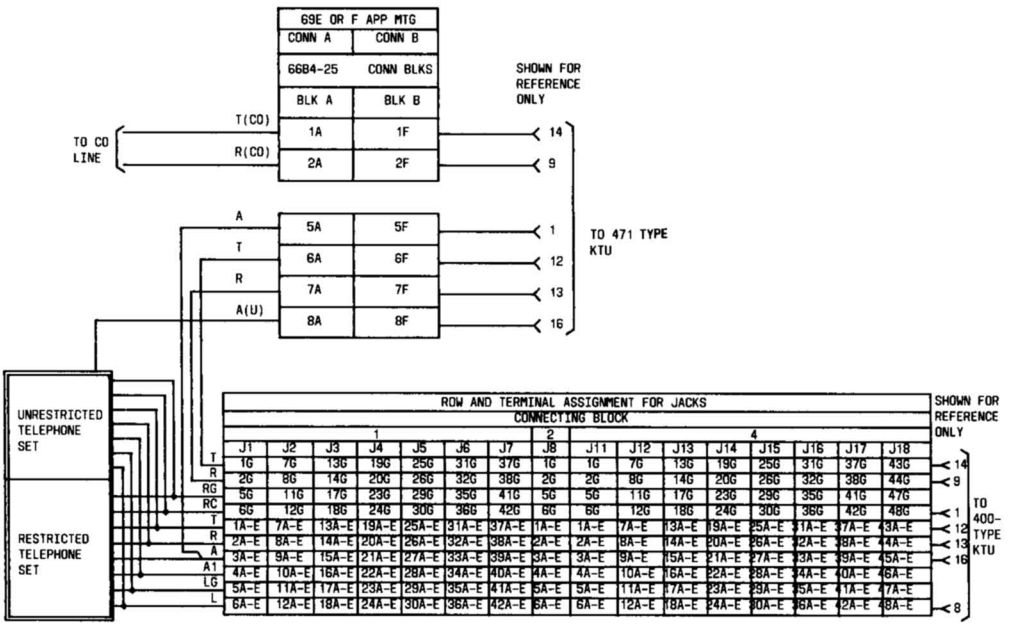

Fig. 76—Connections From 471-Type KTU (Battery Reversal Toll Restriction Circuit) in 69E or F Apparatus Mounting to External Connecting Blocks

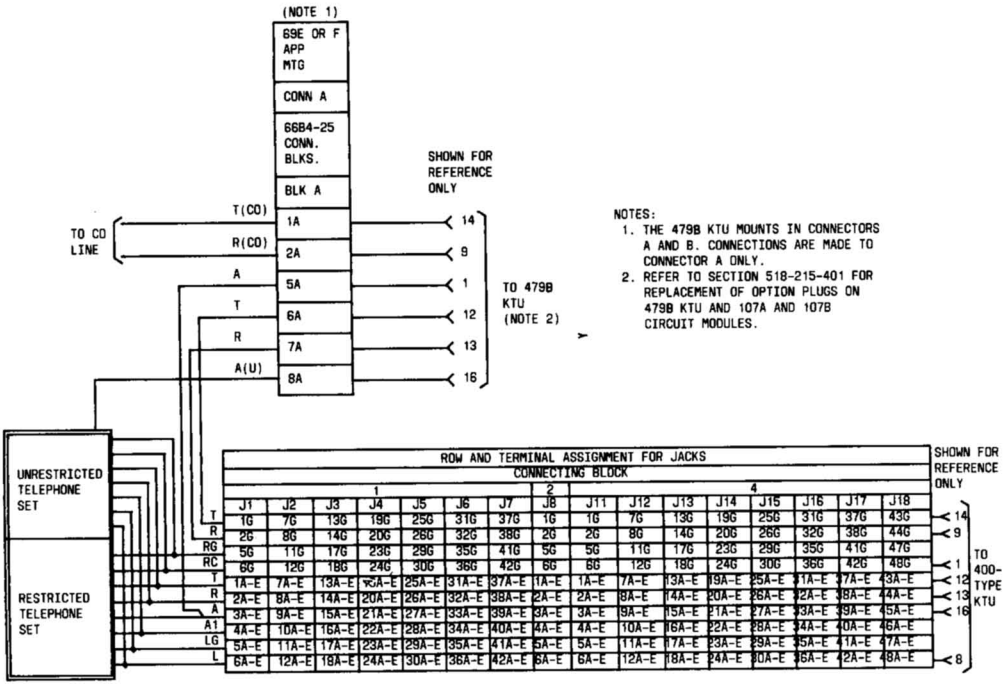

	1							2					4			
J1	J2	J3	J4	J5	J6	J7	J8	J11	J12	J13	J14	J15	J16	J17	J18	
1G	7G	13G	19G	25G	31G	37G	1G	1G	7G	13G	19G	25G	31G	37G	43G	14
2G	8G	14G	20G	26G	32G	38G	2G	2G	8G	14G	20G	26G	32G	38G	44G	9
5G	11G	17G	23G	29G	35G	41G	5G	5G	11G	17G	23G	29G	35G	41G	47G	
6G	12G	18G	24G	30G	36G	42G	6G	6G	12G	18G	24G	30G	36G	42G	48G	1
1A-E	7A-E	13A-E	19A-E	25A-E	31A-E	37A-E	1A-E	1A-E	7A-E	13A-E	19A-E	25A-E	31A-E	37A-E	43A-E	12
2A-E	8A-E	14A-E	20A-E	26A-E	32A-E	38A-E	2A-E	2A-E	8A-E	14A-E	20A-E	26A-E	32A-E	38A-E	44A-E	13
3A-E	9A-E	15A-E	21A-E	27A-E	33A-E	39A-E	3A-E	3A-E	9A-E	15A-E	21A-E	27A-E	33A-E	39A-E	45A-E	16
4A-E	10A-E	16A-E	22A-E	28A-E	34A-E	40A-E	4A-E	4A-E	10A-E	16A-E	22A-E	28A-E	34A-E	40A-E	46A-E	
5A-E	11A-E	17A-E	23A-E	29A-E	35A-E	41A-E	5A-E	5A-E	11A-E	17A-E	23A-E	29A-E	35A-E	41A-E	47A-E	
6A-E	12A-E	18A-E	24A-E	30A-E	36A-E	42A-E	6A-E	6A-E	12A-E	18A-E	24A-E	30A-E	36A-E	42A-E	48A-E	8

Fig. 77—Connections From 479B KTU (Rotary Dial Toll Restriction Circuit) in 69E or F Apparatus Mounting to External Connecting Blocks

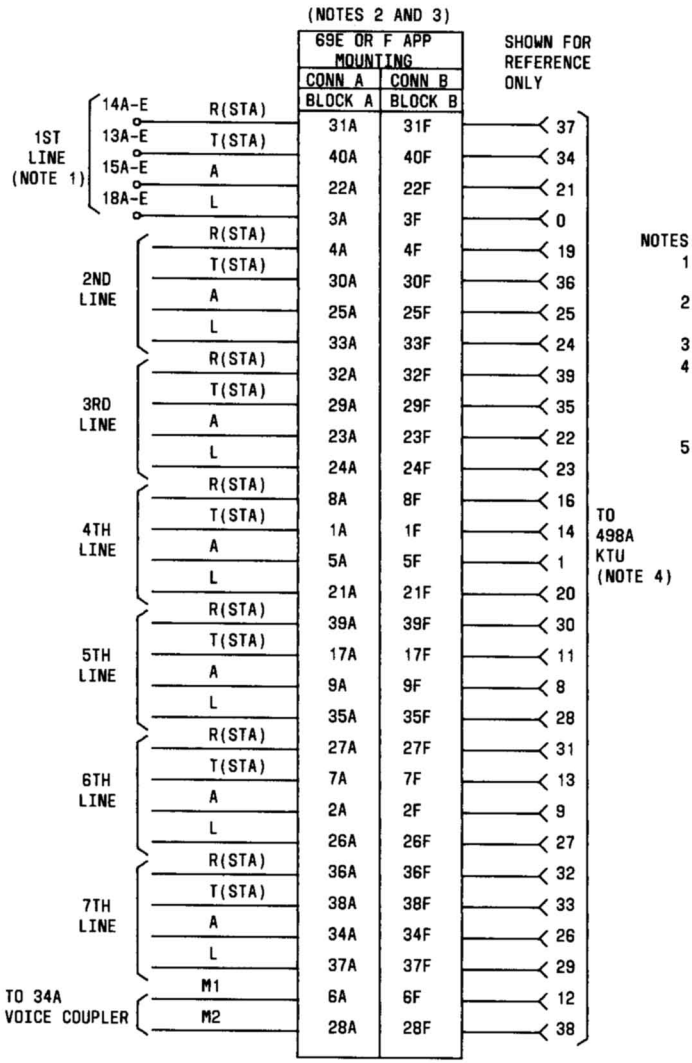

NOTES:

1. TERMINATIONS ARE FOR 400H IN JK3. SHOWN AS EXAMPLE ONLY.
2. SUPPLY LAMP GROUND ON 15A OF BLOCK A INSTEAD OF MG.
3. DO NOT CONNECT RN TO 17A OF BLOCK A.
4. MUSIC-ON-HOLD CIRCUITS FOR LINES 1-4 ARE ON 498A KTU. LINES 5-7 REQUIRE ADDITION OF 116A1 CIRCUIT MODULE TO 498A.
5. A 69E OR F EQUIPPED WITH BOTH A 498A KTU AND A 116A1CM CANNOT BE USED WITH A SECOND 498A KTU EQUIPPED WITH A 116A1CM OR ANOTHER KTU WHICH REQUIRES THE USE OF THE RN LEAD

Fig. 78—Connections for 498A KTU (Music-On-Hold) in 69E or F Apparatus Mounting

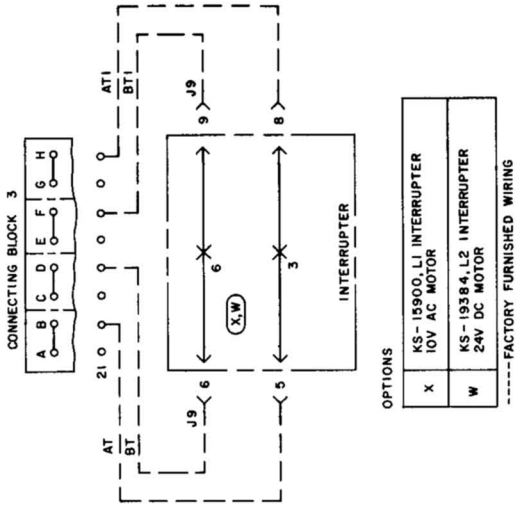

Fig. 79—Factory-Furnished Wiring for AT1 and BT1 Circuits

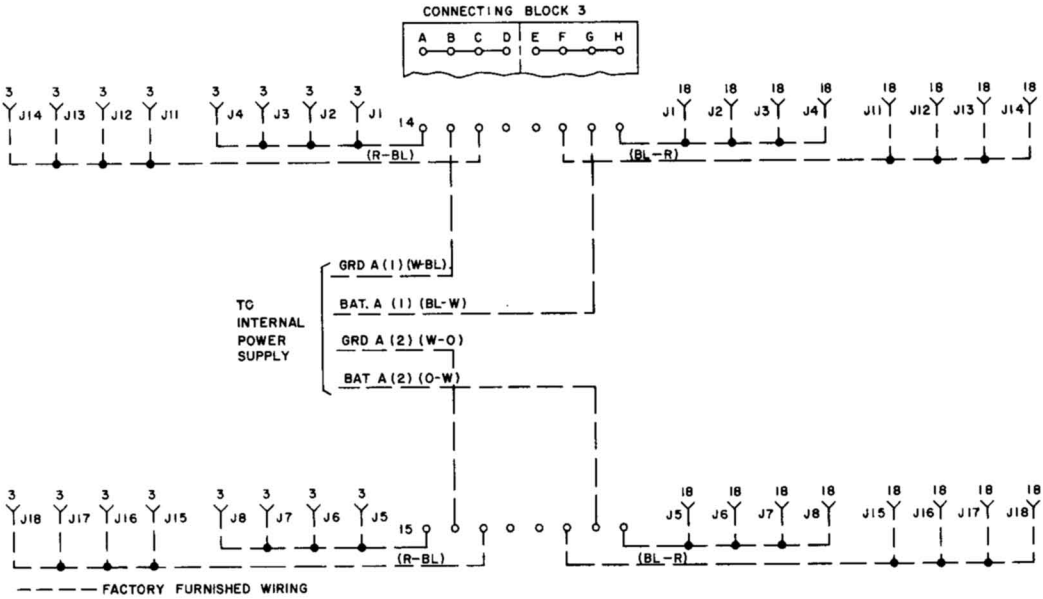

Fig. 80—Factory-Furnished Wiring for Bat. A (1) and Bat. A (2) Circuits

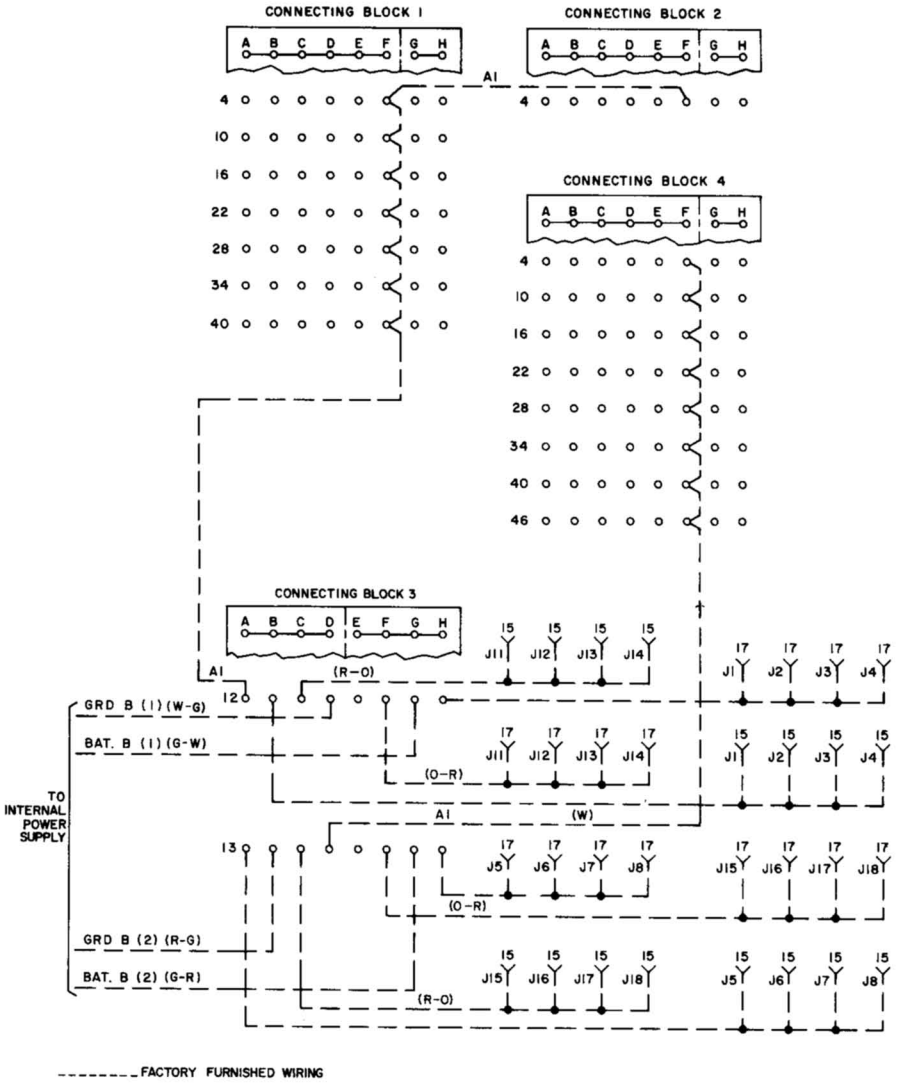

Fig. 81—Factory-Furnished Wiring for Bat. B (1) and Bat. B (2) Circuits

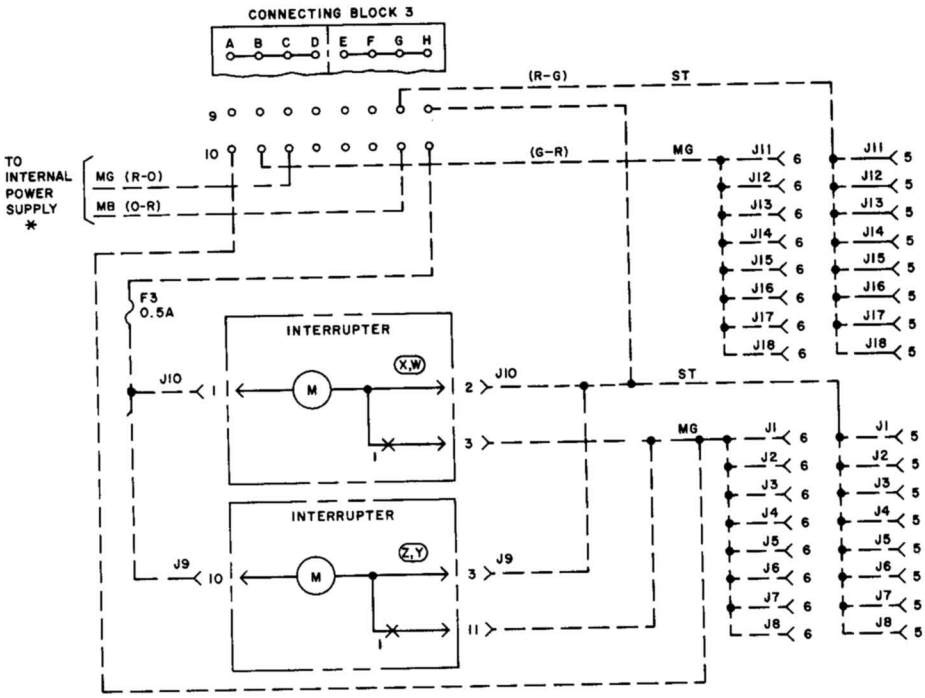

— — — — FACTORY FURNISHED WIRING

* WHEN 19C2 POWER SUPPLY ("T" OPTION) IS PROVIDED, AN EXTERNALLY LOCATED RINGING SOURCE MUST BE LOCALLY PROVIDED.

INTERRUPTER OPTIONS

Z	KS-19175, L1 INTERRUPTER 10V AC MOTOR
Y	KS-19385, L2 INTERRUPTER 24V DC MOTOR
X	KS-15900, L1 INTERRUPTER 10V AC MOTOR
W	KS-19384, L2 INTERRUPTER 24V DC MOTOR

Fig. 82—Factory-Furnished Wiring for MB, MG, and ST Circuits

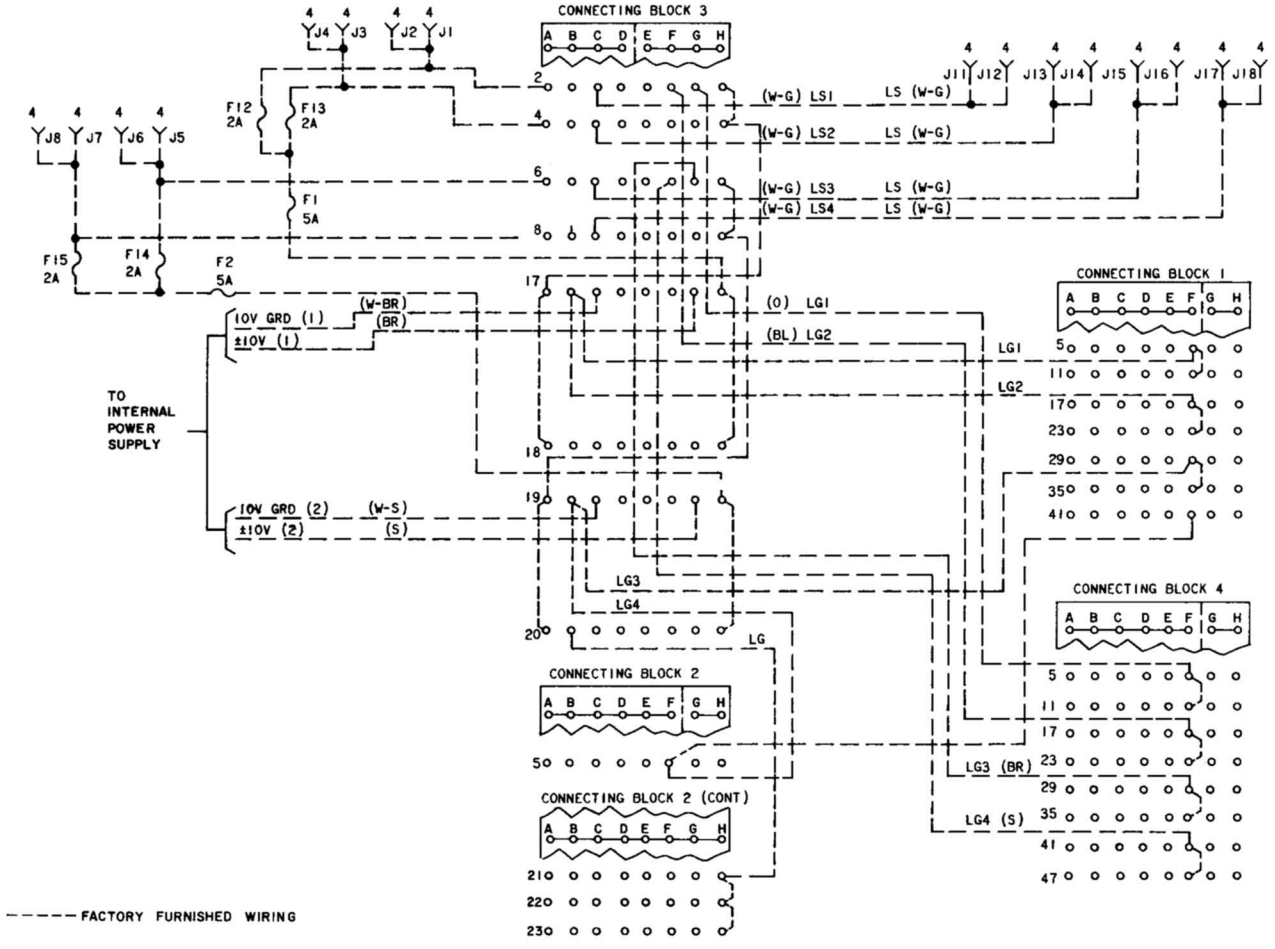

Fig. 83—Factory-Furnished Wiring for Lamp Steady Circuits

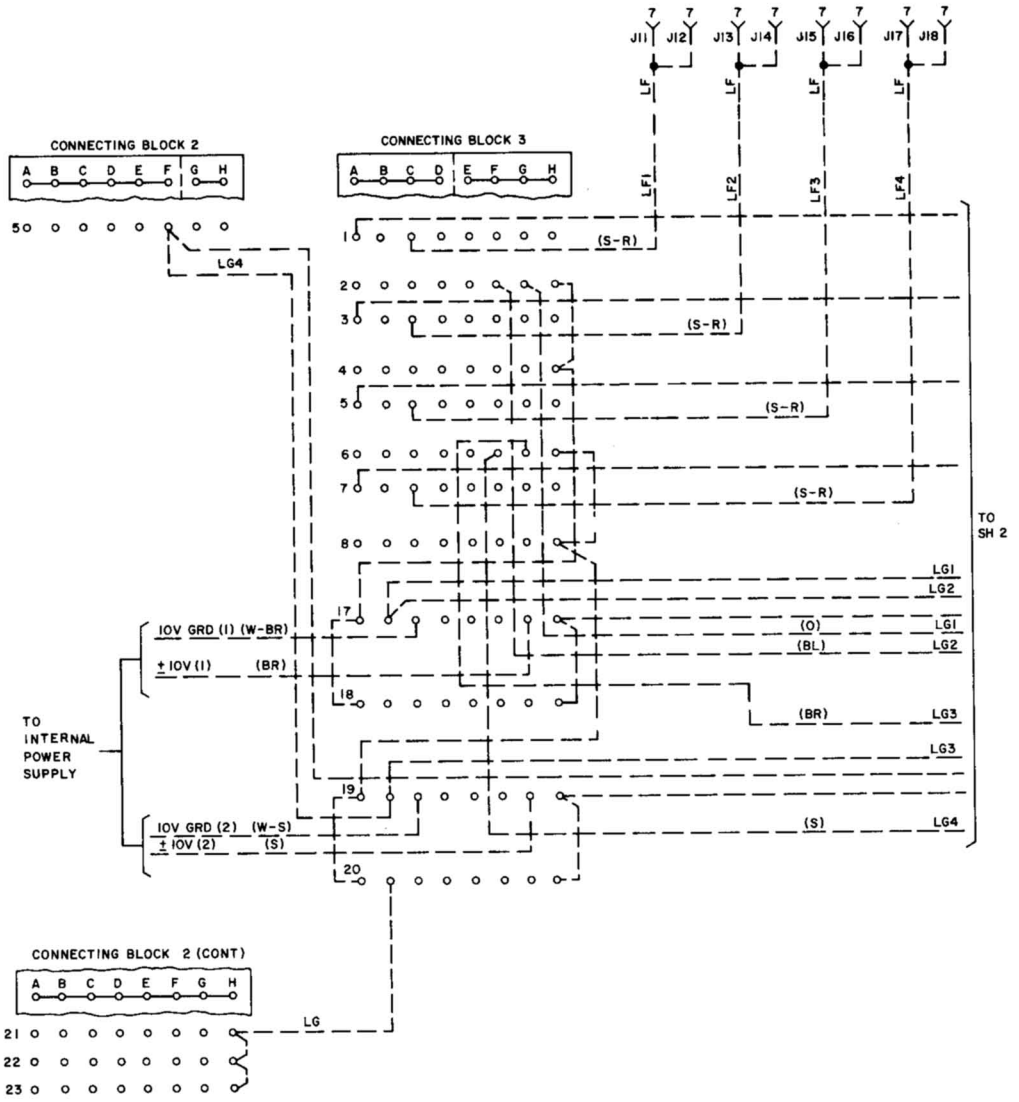

Fig. 84—Factory-Furnished Wiring for Lamp Flash Circuits (Sheet 1 of 2)

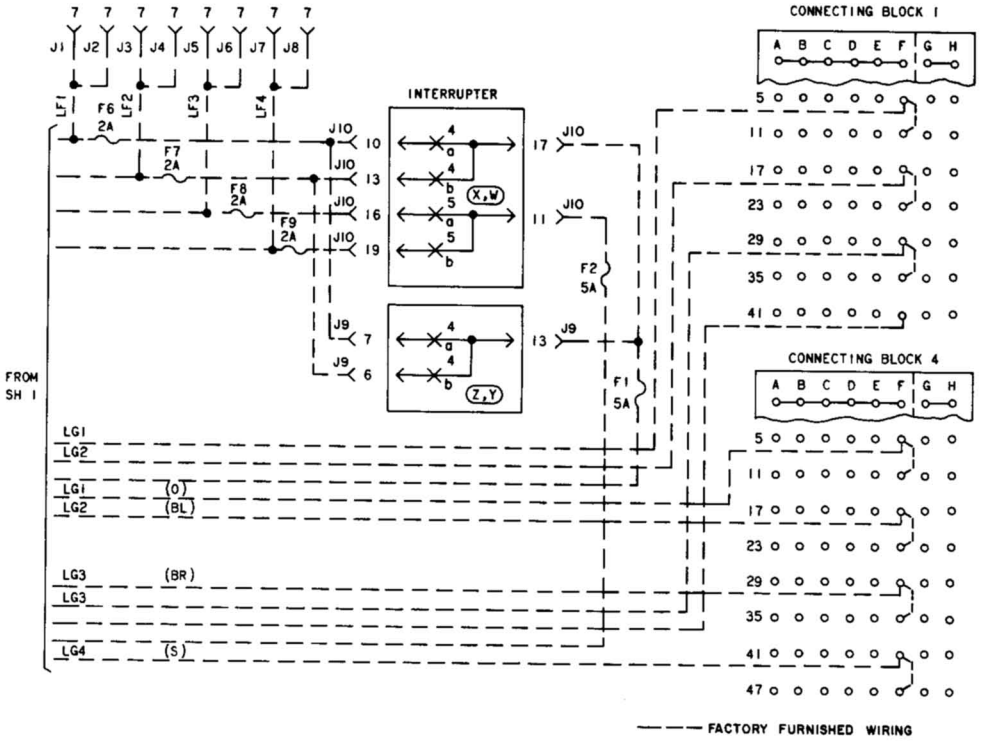

Fig. 84—Factory-Furnished Wiring for Lamp Flash Circuits (Sheet 2 of 2)

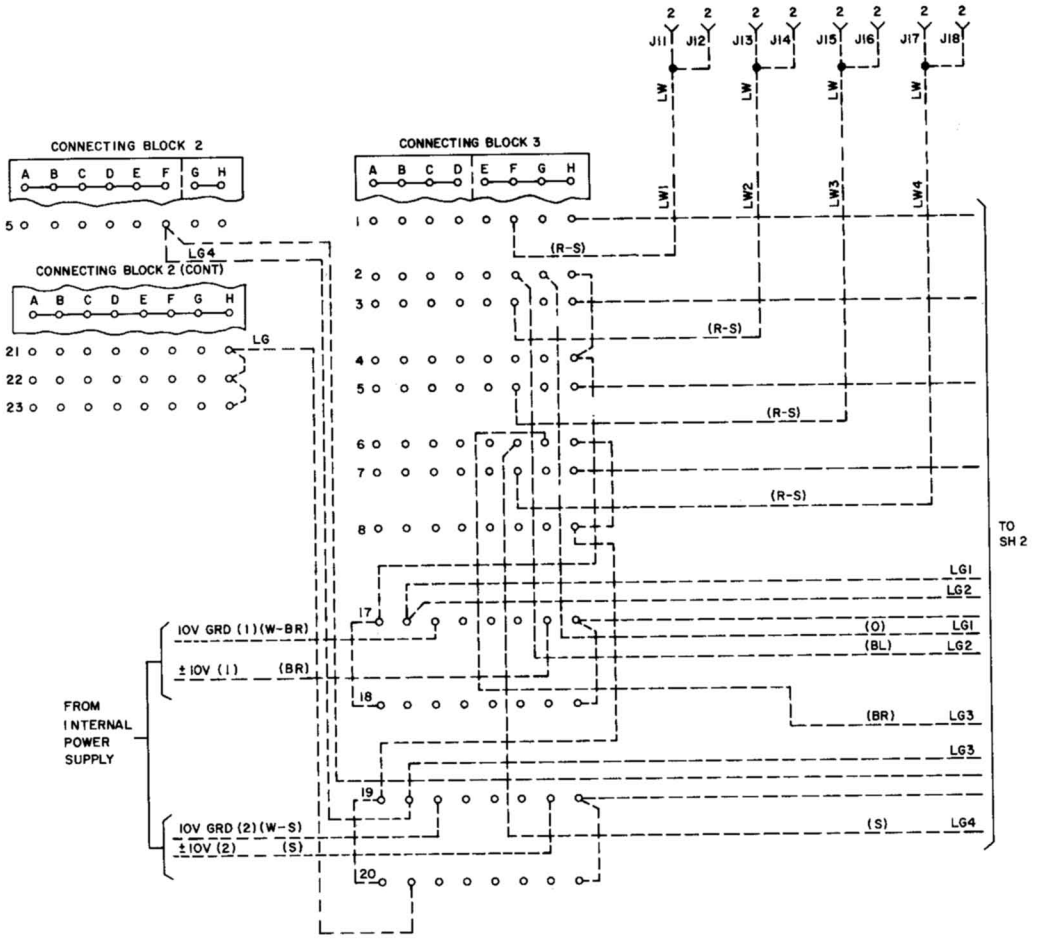

Fig. 85—Factory-Furnished Wiring for Lamp Wink Circuits (Sheet 1 of 2)

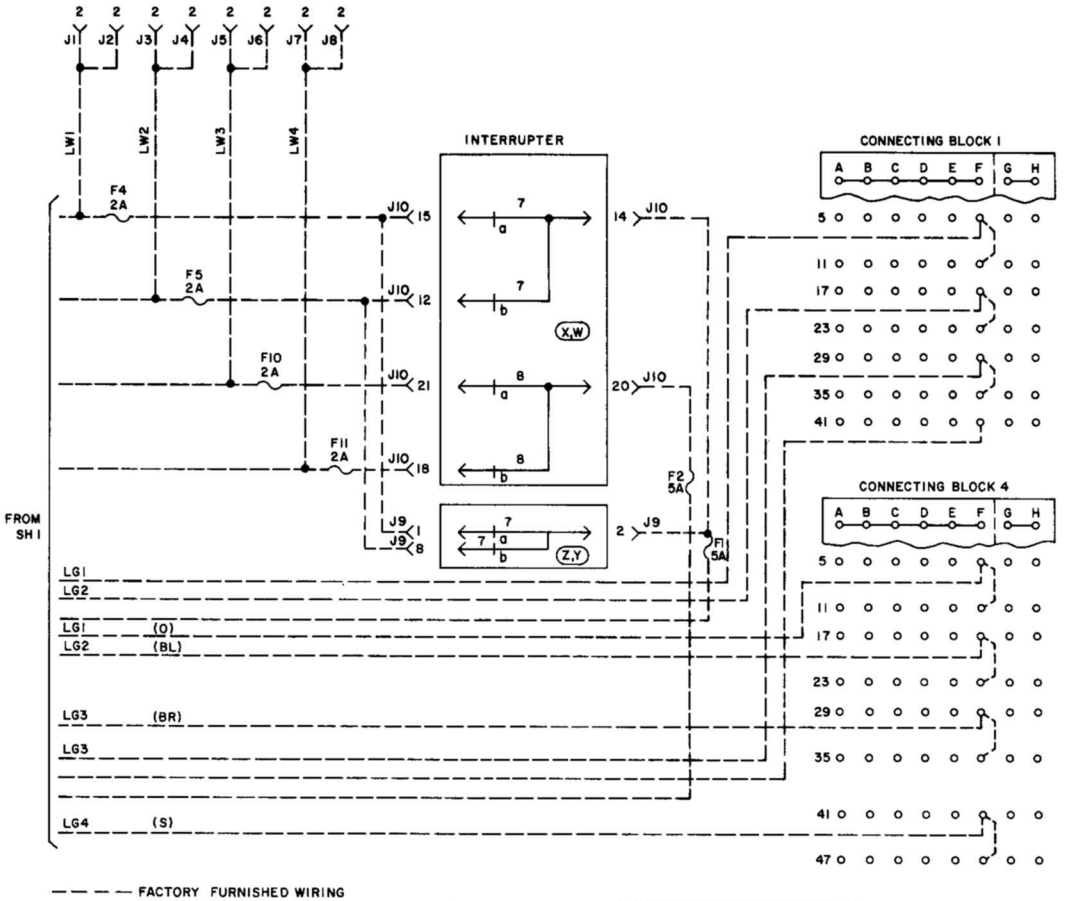

OPTION		LAMP LOAD	CONNECTING BLOCK NO. 3 STRAPS	
			PLACE	REMOVE
Z	KS-19175, L1 INTERRUPTER 10V AC MOTOR	1 TO 100 LAMPS	1G TO 5G 3G TO 7G 18D TO 19D	-
Y	KS-19385, L2 INTERRUPTER 24V DC MOTOR			
X	KS-15900, L1 INTERRUPTER 10V AC MOTOR	101 TO 200 LAMPS	-	1G TO 5G 3G TO 7G 18D TO 19D
W	KS-19384, L2 INTERRUPTER 24V DC MOTOR			

Fig. 85—Factory-Furnished Wiring for Lamp Wink Circuits (Sheet 2 of 2)

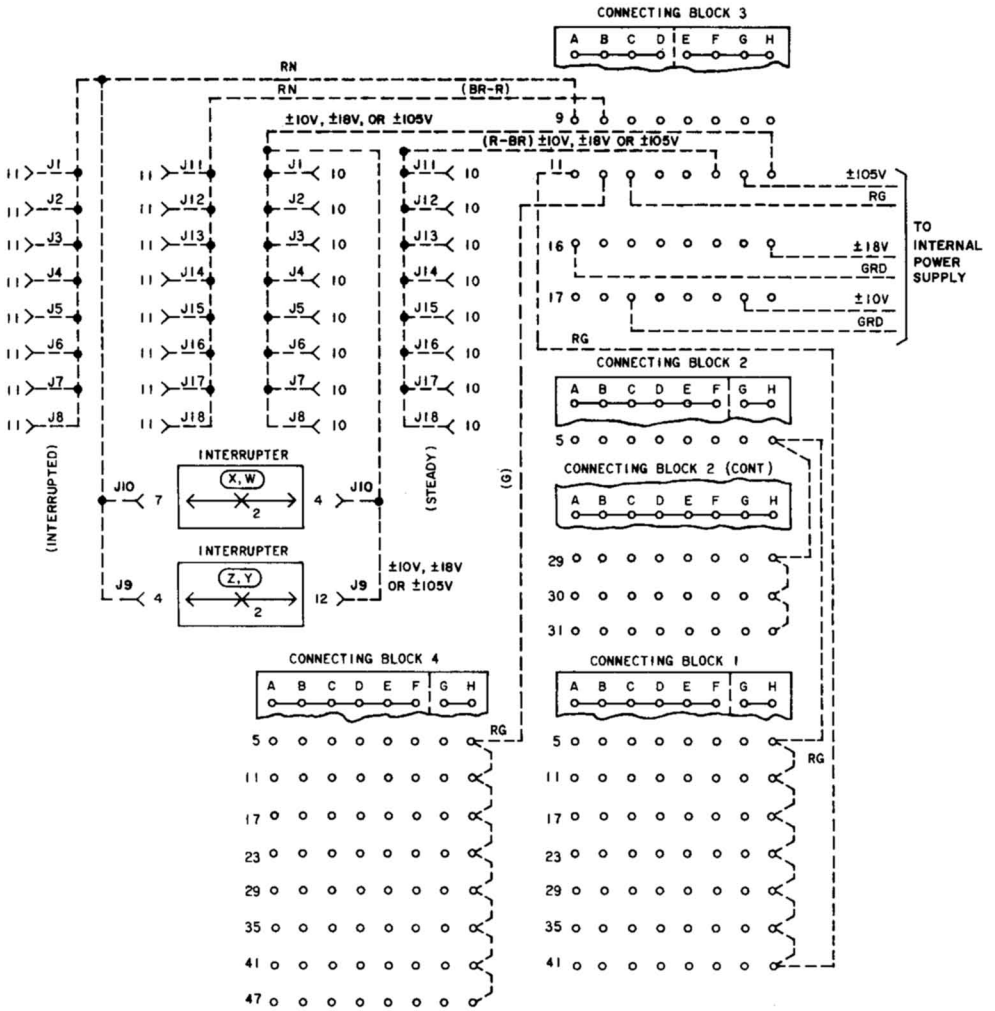

Fig. 86—Factory-Furnished Wiring for ±10 Volt, ±18 Volt, ±105 Volt, and RN Audible Signaling Circuits

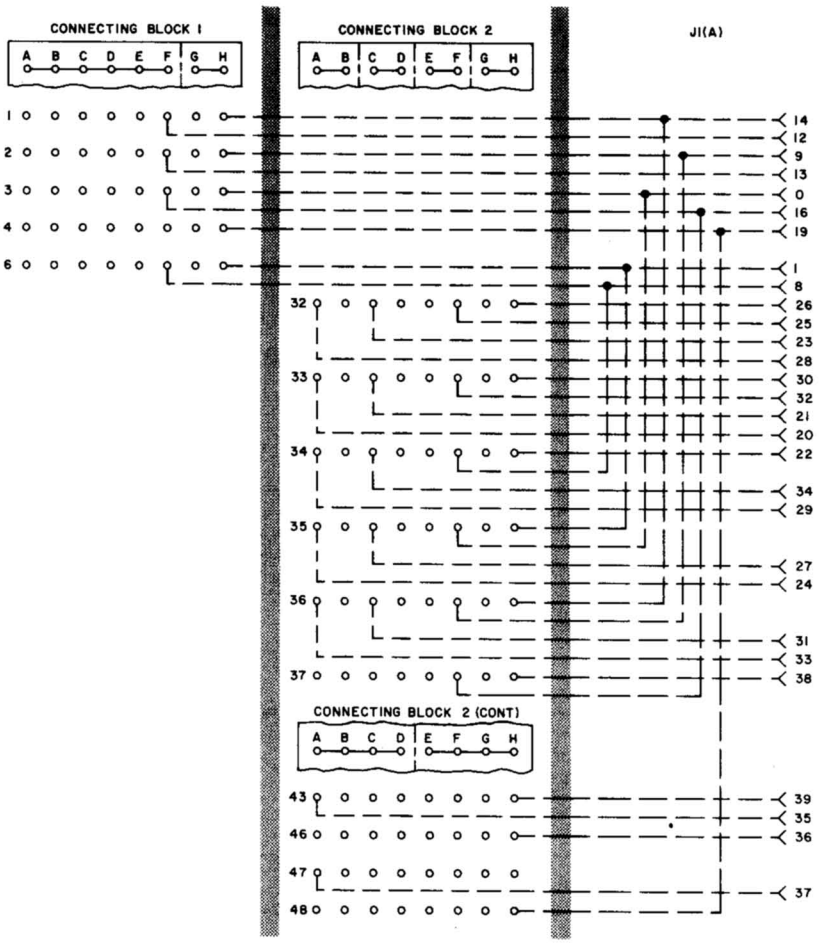

Fig. 87—Factory-Furnished Wiring for Jack 1

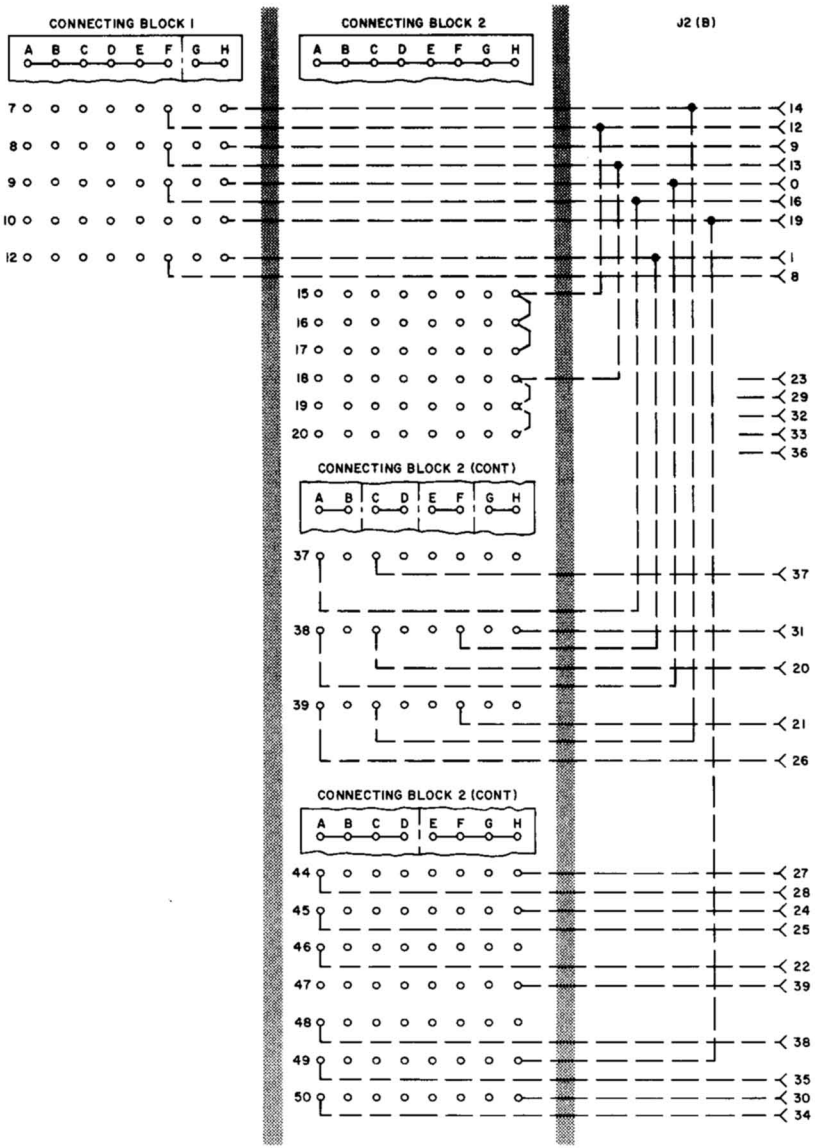

Fig. 88—Factory-Furnished Wiring for Jack 2

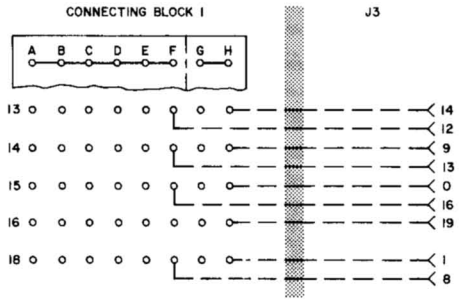

Fig. 89—Factory-Furnished Wiring for Jack 3

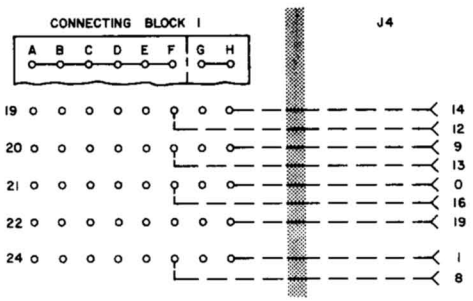

Fig. 90—Factory-Furnished Wiring for Jack 4

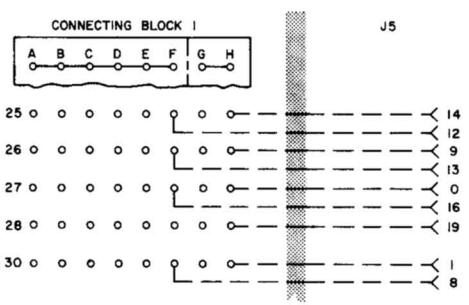

Fig. 91—Factory-Furnished Wiring for Jack 5

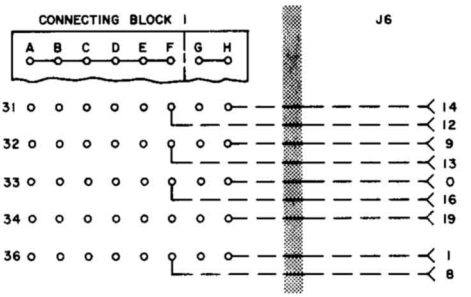

Fig. 92—Factory-Furnished Wiring for Jack 6

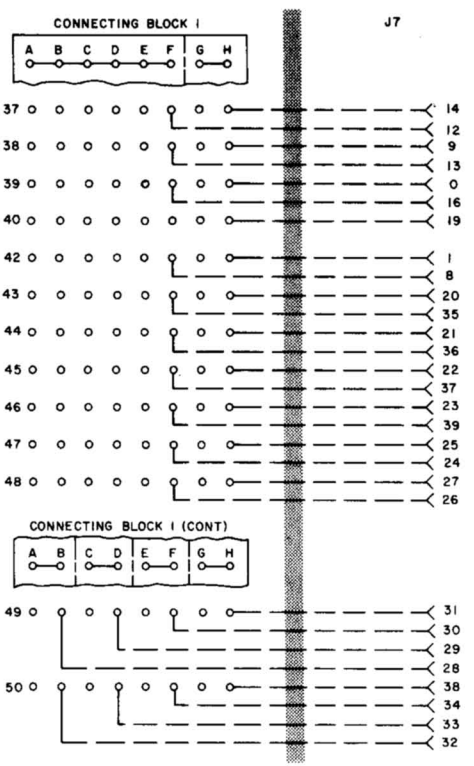

Fig. 93—Factory-Furnished Wiring for Jack 7

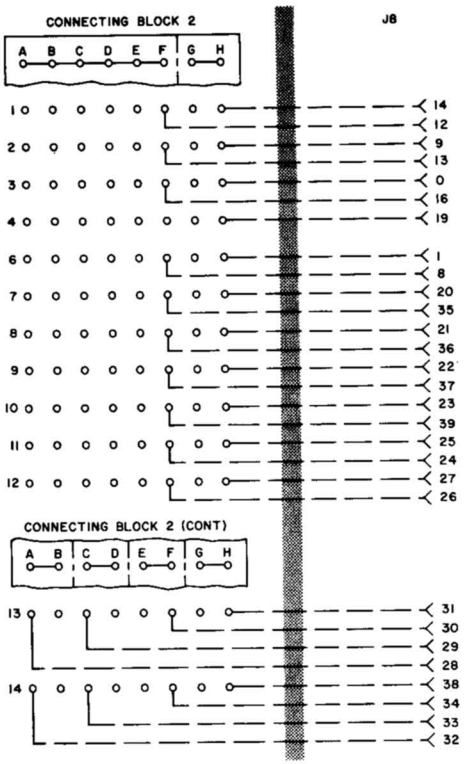

Fig. 94—Factory-Furnished Wiring for Jack 8

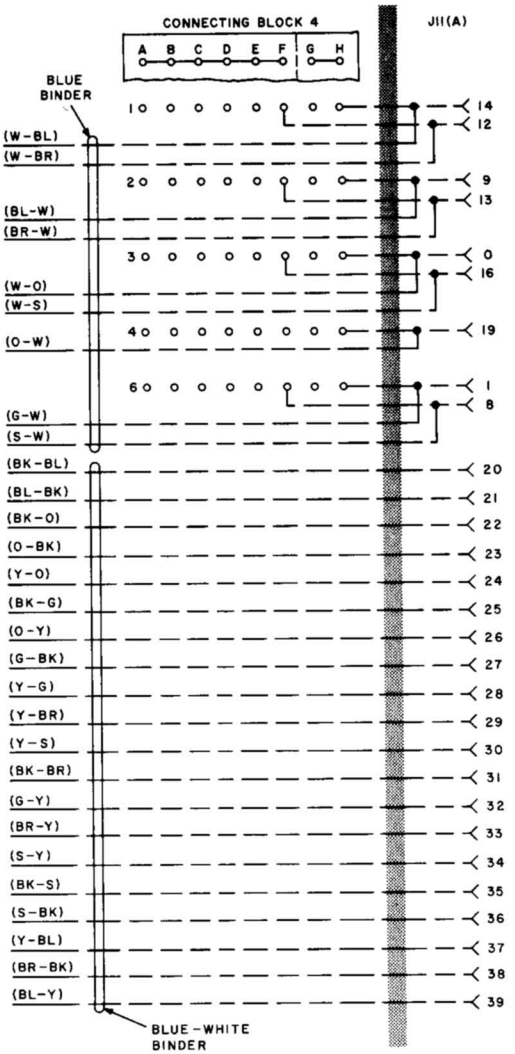

Fig. 95—Factory-Furnished Wiring for Jack 11

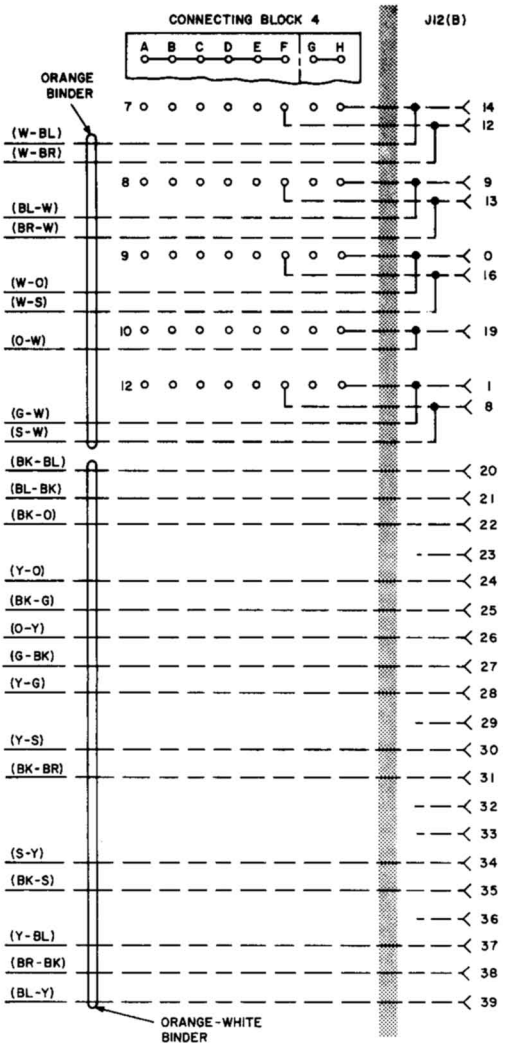

Fig. 96—Factory-Furnished Wiring for Jack 12

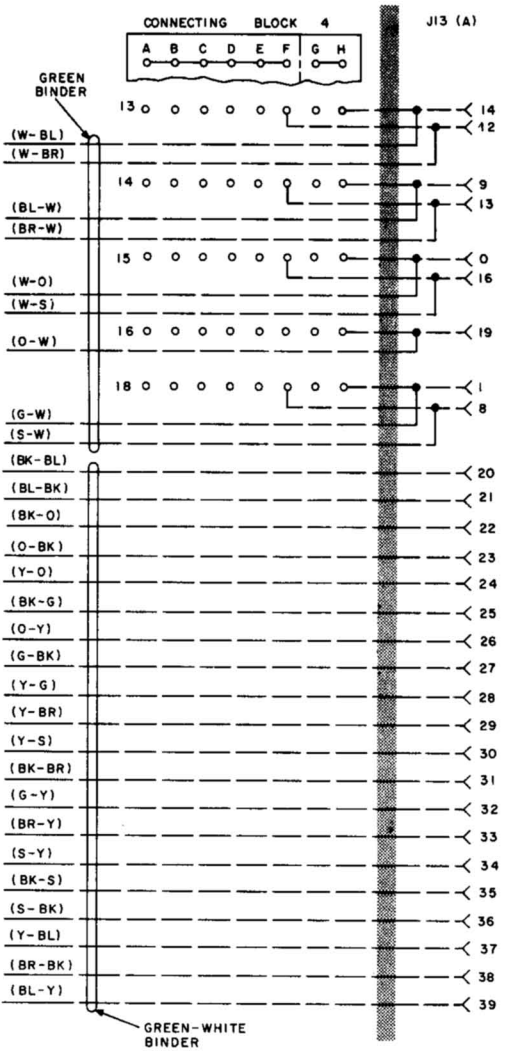

Fig. 97—Factory-Furnished Wiring for Jack 13

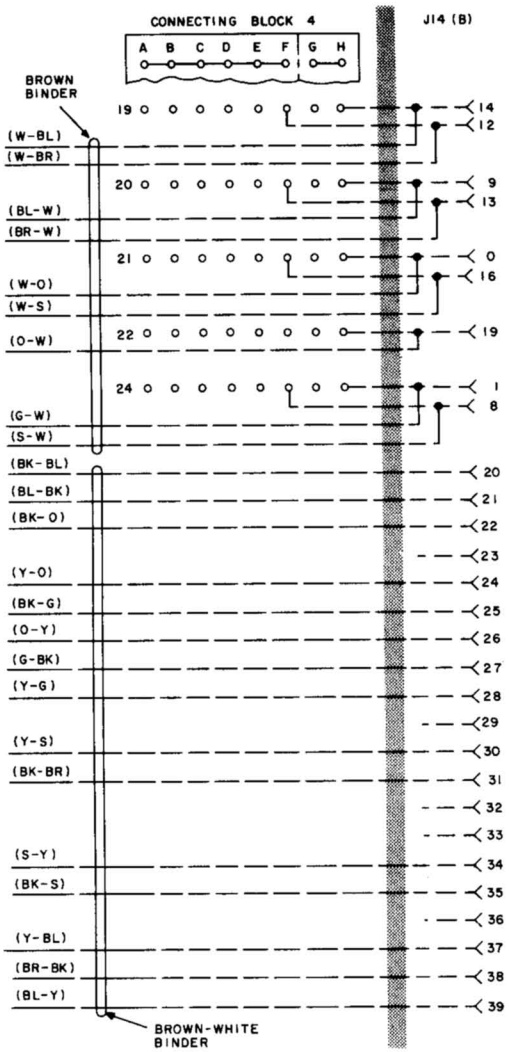

Fig. 98—Factory-Furnished Wiring for Jack 14

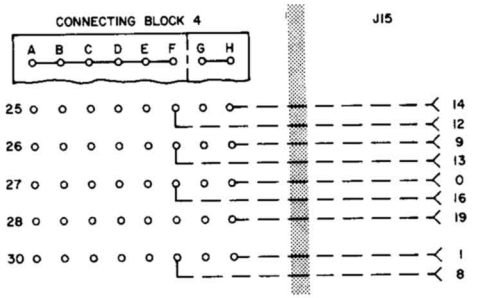

Fig. 99—Factory-Furnished Wiring for Jack 15

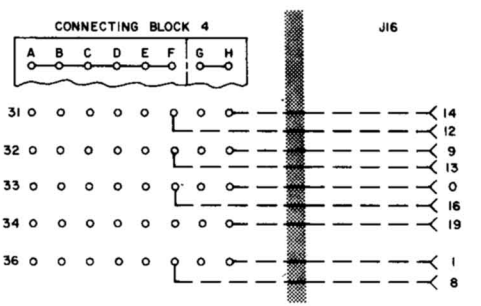

Fig. 100—Factory-Furnished Wiring for Jack 16

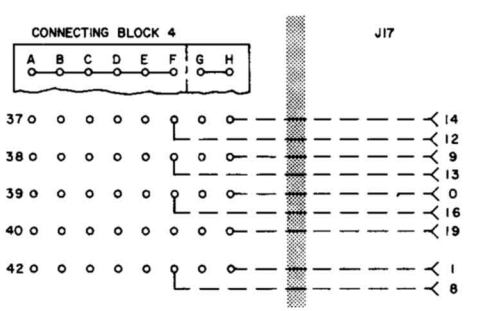

Fig. 101—Factory-Furnished Wiring for Jack 17

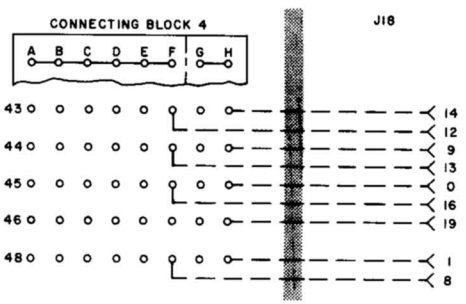

Fig. 102—Factory-Furnished Wiring for Jack 18