THE NO. 355 COMMUNITY DIAL OFFICE

TRAINING MANUAL

SEQUENCE CHARTS AND OPERATIONAL SKETCHES

PLANT SCHOOL
4909 HARFORD ROAD
BALTIMORE 21214, MARYLAND

THE AMERICAN TELEPHONE AND TELEGRAPH COMPANY

OPERATION AND ENGINEERING DEPARTMENT

PLANT OPERATION DIVISION

For Training Purposes Only

Printed in U.S.A.

January 1953

PREFACE

This provisional training material represents a preliminary step toward improving the "learning" literature for the No. 355 community dial office.

This manual contains a series of typical circuit diagrams. These are drawn in the simplified style which is used in teaching the complex 'Common Control' switching systems now in current use. This method makes use of sequence charts and operational sketches, and this volume contains a chart and sketch for each of the typical circuits.

Since the drawings are intended to be used in the study of the 355 CDO in general, and do not necessarily conform to any particular office, it may be necessary to consider the regular Schematic Drawings (SD's) and Circuit Descriptions (CD's) when preparing learners to work in a specific office. Also, those employees who must make mechanical or electrical adjustments of the apparatus should have actual practice on typical switches. In this connection a review of the Bell System training film "The Step-by-Step Switch" will be found helpful.

Students should be cautioned that the particular circuits contained in this manual are intended to be used as training aids, and are not necessarily applicable for maintenance.

TABLE OF CONTENTS

SUBSCRIBER LINE EQUIPMENT

SD 31777-01

LINE FINDER

SD 31922 CONTROL CCT.
SD 32000-01 LINE FINDER

SELECTORS

SD 31735 LOCAL OR INCOMING
SD 31744 TOLL INTERMEDIATE
SD 31914 SELECTOR REPEATER
SD 31915 TOLL INCOMING
SD 31964 SELECTOR
SD 32077 SELECTOR

CONNECTORS

SD 30243 TEST CONNECTOR
SD 30862 COMBINATION CONNECTOR
SD 30950 COMB. CONN. ROT. HUNT.
SD 31741 " " 5 CODE T.P. LINE
SD 31773 TEST CONNECTOR
SD 31811 COMB. CONN. 10 PRTY T.P.S.
SD 31819 " " ROT. HUNT.

MISCELLANEOUS

SD 31762 REVERTING CALL
SD 31851 TEST DISTRIBUTOR
SD 31873 AUX. COIN LINE CCT.
SD 31980 ALARM CONTROL & SENDER
SD 32007 TEST DISTRIBUTOR
SD 80779 RING. GEN.
SD 80885 RING. CONTROL, TRANSFER
T 616930 BANK WIRING
T 616986 BANK WIRING

TRUNKS

SD 31747 2 WAY TRUNK
SD 31337 INTERCEPT TRUNK
SD 31793 TRUNK FINDER
SD 31820 2 WAY OPER. TRUNK
SD 31822 " " "
SD 31842 2 WAY INTERLOCAL
SD 31874 2 WAY TRUNK
SD 31925 O.G.T. TO MANUAL
SD 31990 ROTARY OUT TRK. SW.
SD 31965 O.G.T. INTERCEPTING

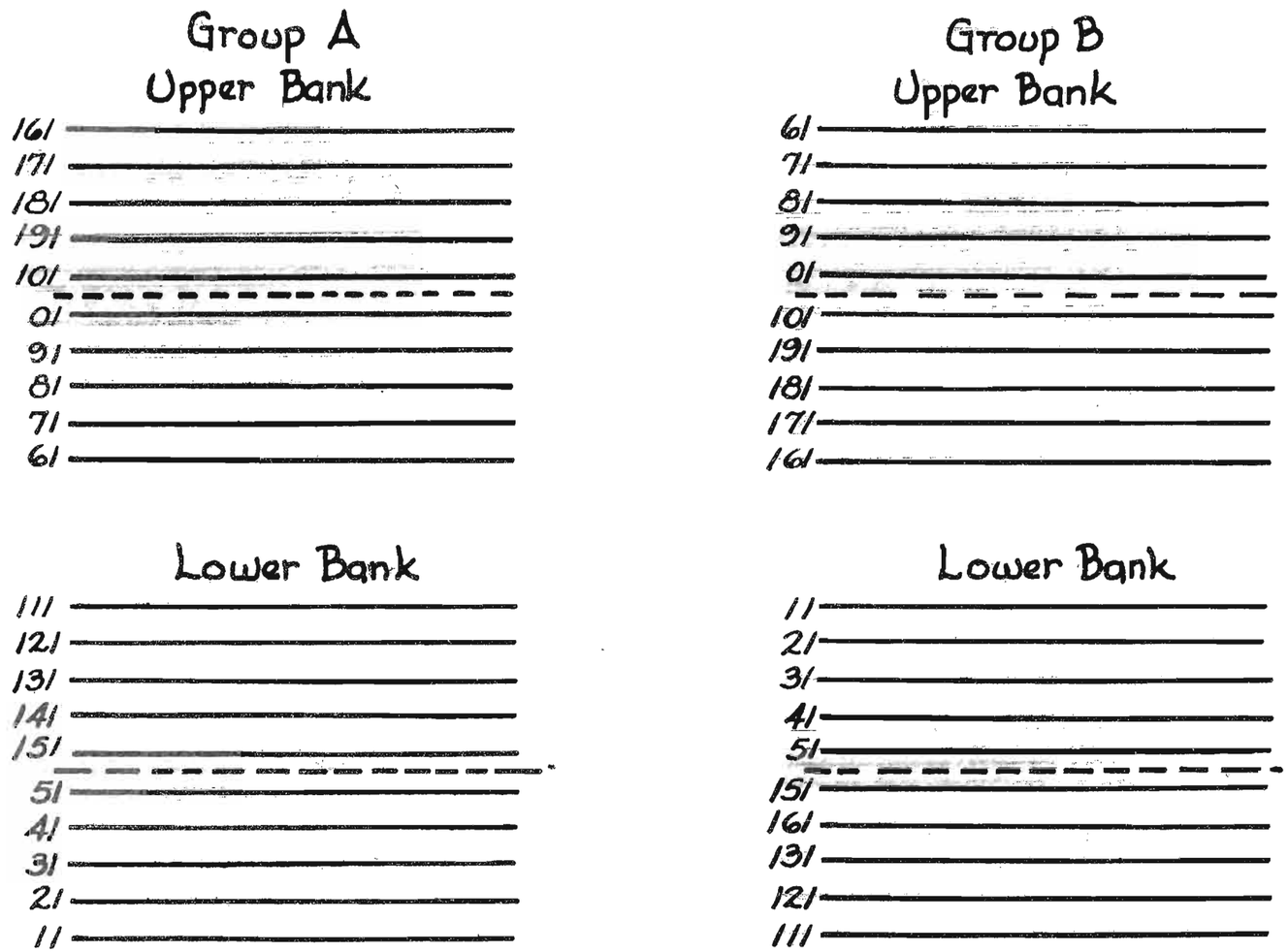

Fig. 2

Plant School
Training Purposes Only

355 CDO
Bank Wiring
T 616930

C.E. Shropshire

GROUP A

UPPER BANK

101	100
191	190
181	180
171	170
161	160
151	150
141	140
131	130
121	120
111	110

LOWER BANK

01	00
91	90
81	80
71	70
61	60
51	50
41	40
31	30
21	20
11	10

GROUP B

UPPER BANK

110	111
120	121
130	131
140	141
150	151
160	161
170	171
180	181
190	191
100	101

LOWER BANK

10	11
20	21
30	31
40	41
50	51
60	61
70	71
80	81
90	91
00	01

FIG. 4.5

PLANT SCHOOL
TRAINING PURPOSES ONLY

355 CDO
BANK WIRING
T616986

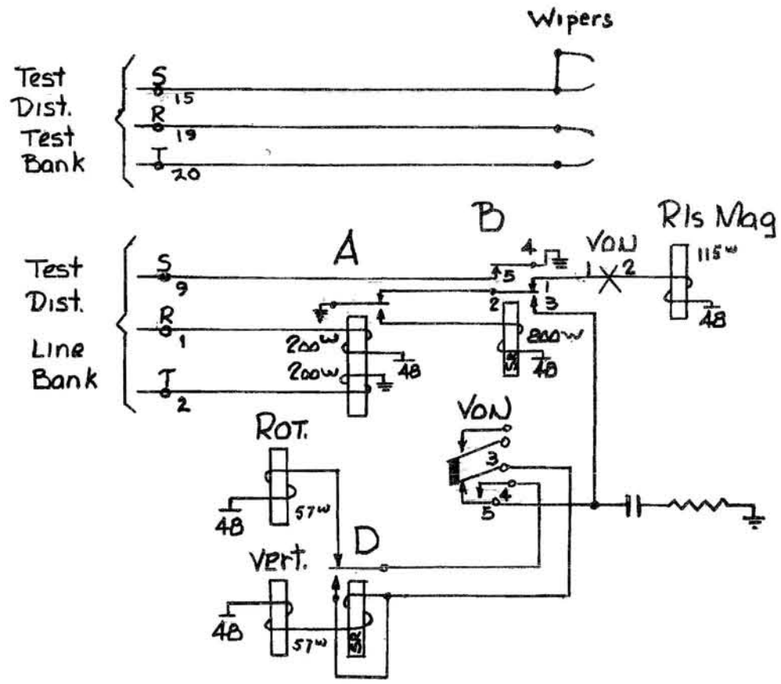

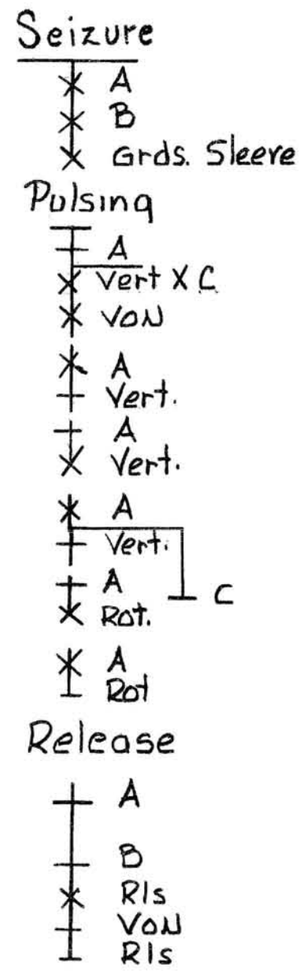

PLANT SCHOOL TRAINING PURPOSES ONLY

355 CDO
Test Connector

C.E. SHROPSHIRE
5-31-51

SD30243-011

Comb. Connector

Seizure
Short T/R from Loc Sel.

A
B

Grd's Sleeve Loc. & Toll — Grds "MS" lead

Pulsing

Vertical

A
Vert. — C
V.O.N. — F (Toll Pulsing Only) Locks to "C" lead

A
Vert.

A
Vert

A
Vert

C

Rotary

A
Rot. — E

A
Rot.

A
Rot

A
Rot

E

Call Line Busy

E — Grd. Sleeve Called Line
G (Locks to "B")

Busy tone Calling Sub.

Called Line Idle

E — Batt. on Sleeve Called Line
P (Locks to "B")
closes Pick up lead to "J"

Ringing Called Sub. (-1, -2, -3)
Grd. on Pickup

J — (Interrupted Grd. on Bank term. thru A wiper.)
Grd. with Res.
K (follows pulses)
Neg. Superimposed Rq.

Ringing Called Sub. (+1, +2)
Grd. on Pickup

J — Interrupted Grd. Without Res. Thru "A" Wiper
(Locks to "B") N — K (follows Pulses)
Pos. Superimposed Rq.
Called Sub. Ans.
Sub. Short T/R
F
D
Rev. Batt. to calling sub. and furnishes Talk Batt.

Calling Sub. Releases

A
E — B
Grd. Off Sleeves — E — P — F — N (If oper.)
Rls. — D (If not already Released)
V.O.N.
Rls.

Toll Call
Short from Toll sel.

A — H
B

Grd. Sleeve (Local)

Pulsing
(see Local Pulsing)

Called Line Busy

E — Grd. on Sleeve
E — G (locks to "B")
M (To Toll Sel. Sl.)

(Closes T/R To Toll Sel.) — (Closes 60 or 120 1 PM for busy flase.)

("A" is held over Toll Sleeve Grd.)

Called Line Idle

E — Batt. on Sleeve
P
M

Ringing
Grd. Off "C" Lead — Pick up
F
J

Same as local Ringing

Called Sub. Ans.

F (Locks to "C" lead to permit Oper. to Rering)

Release
Grd. removed from Toll "C & S" leads

A — H — M — F — P — N (If oper.)
B
Rls.
V.O.N.
Rls.

Plant School Training Purposes Only

355 CDO
Combination Connector
8 Party T.P.S
SD-30862-01

C.E. Shropshire

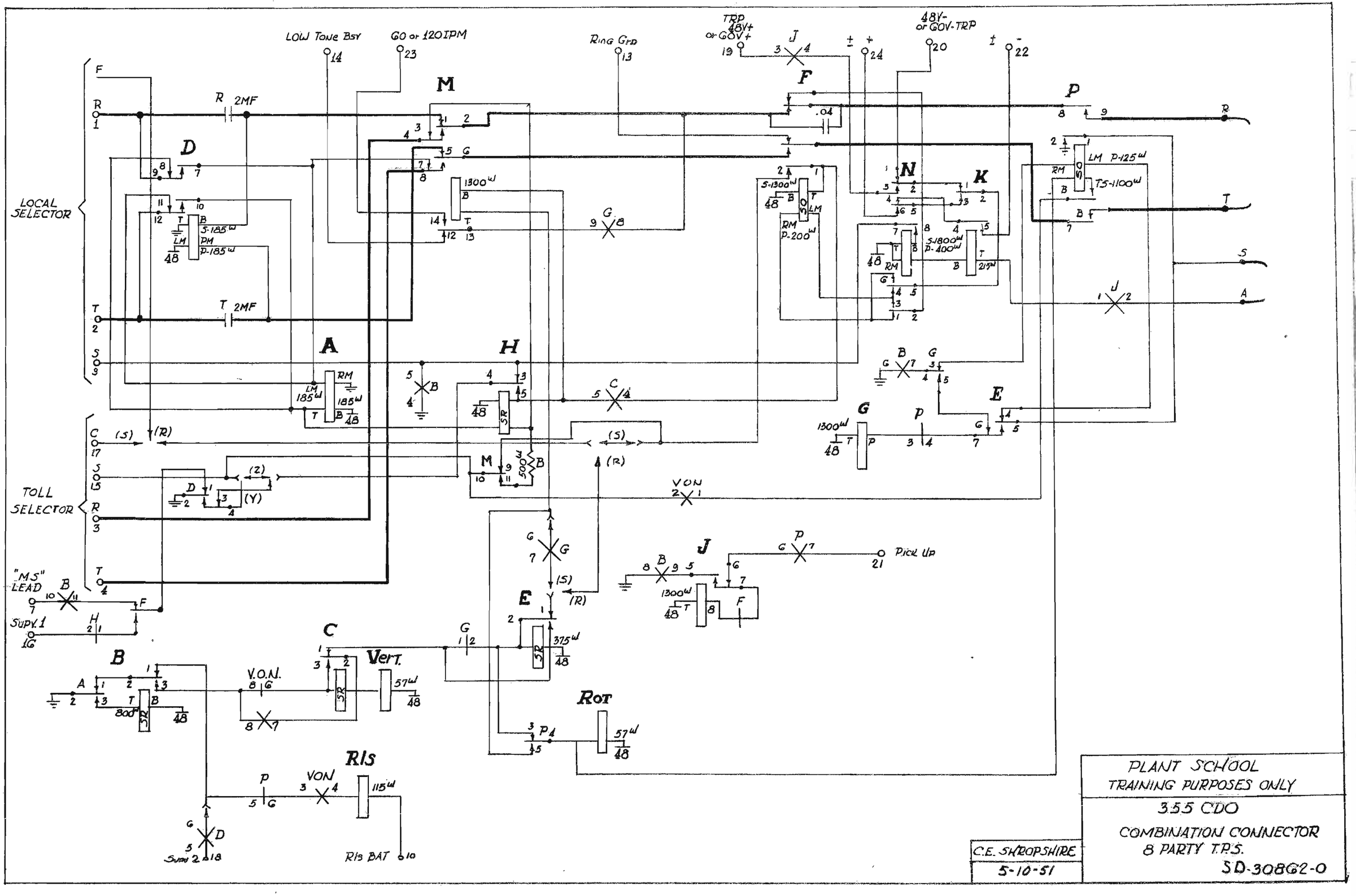

PLANT SCHOOL
TRAINING PURPOSES ONLY

355 CDO

COMBINATION CONNECTOR
8 PARTY T.P.S.

SD-30862-0

C.E. SHROPSHIRE

5-10-51

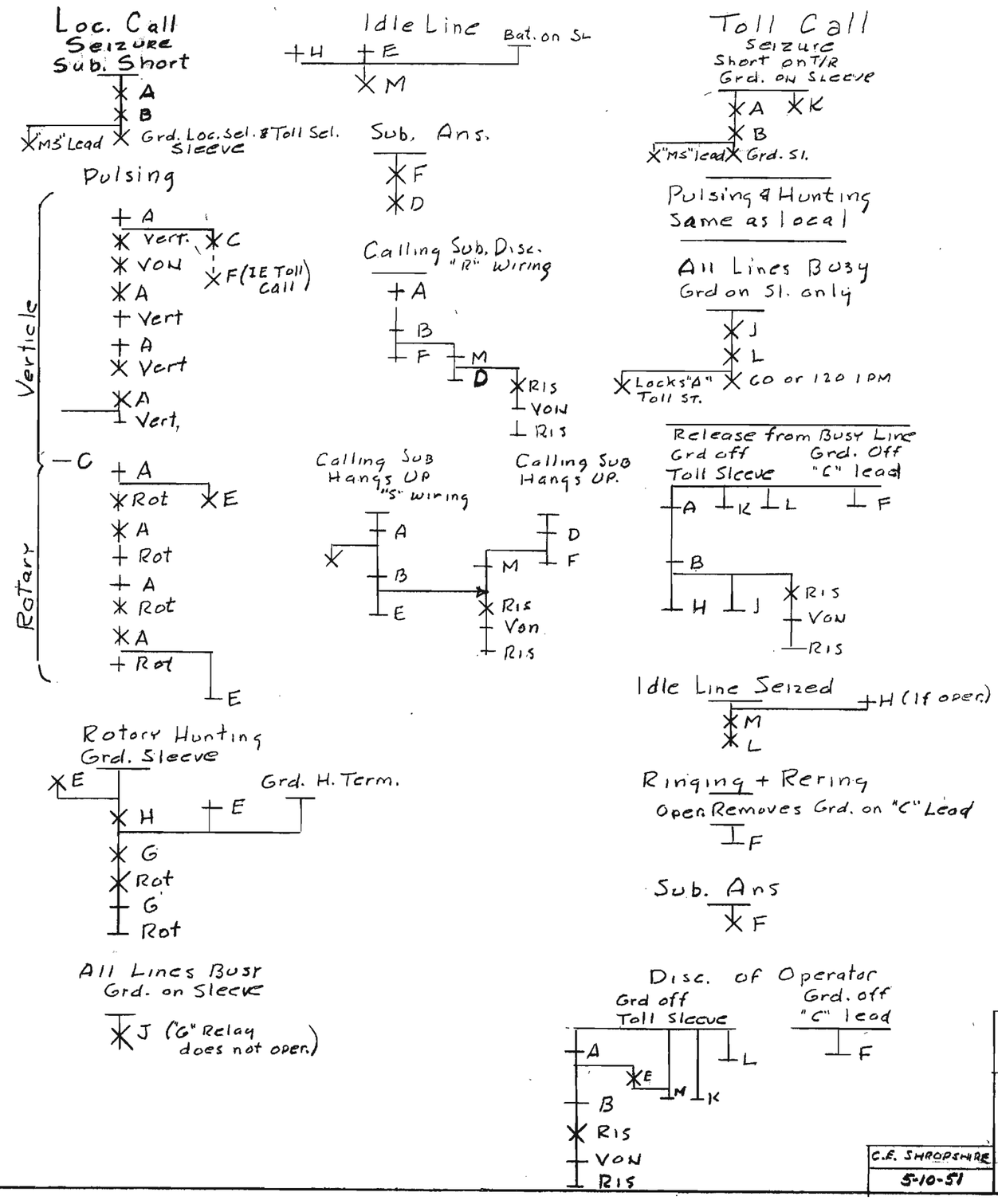

Plant School
Training Purposes Only

355 C.D.O.

COMBINATION CONNECTOR
ROTARY HUNTING
SD 30950-011

C.E. SHROPSHIRE
5-10-51

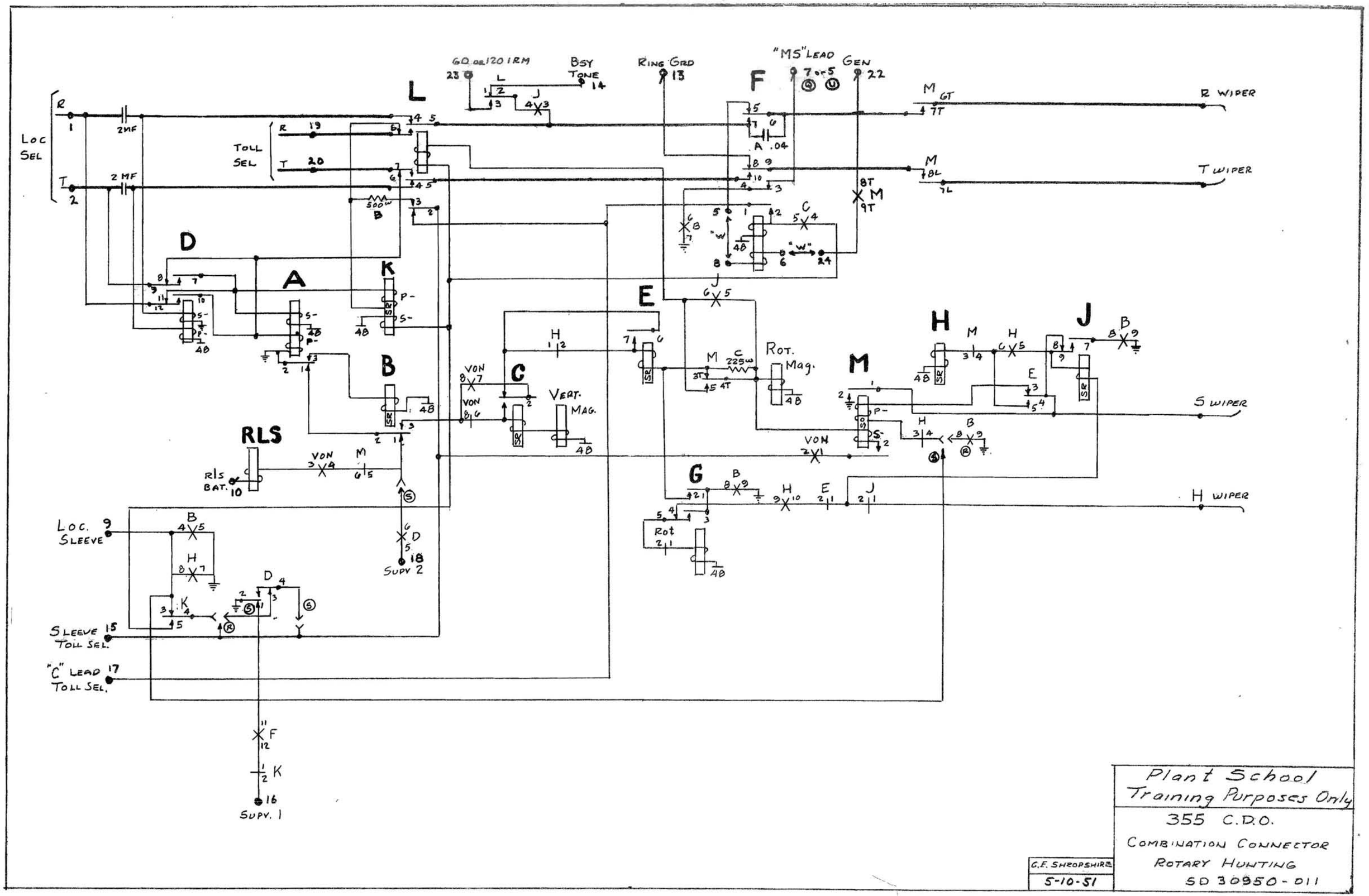

Plant School
Training Purposes Only

355 C.D.O.

COMBINATION CONNECTOR
ROTARY HUNTING

SD 30950-011

G.E. SHROPSHIRE

5-10-51

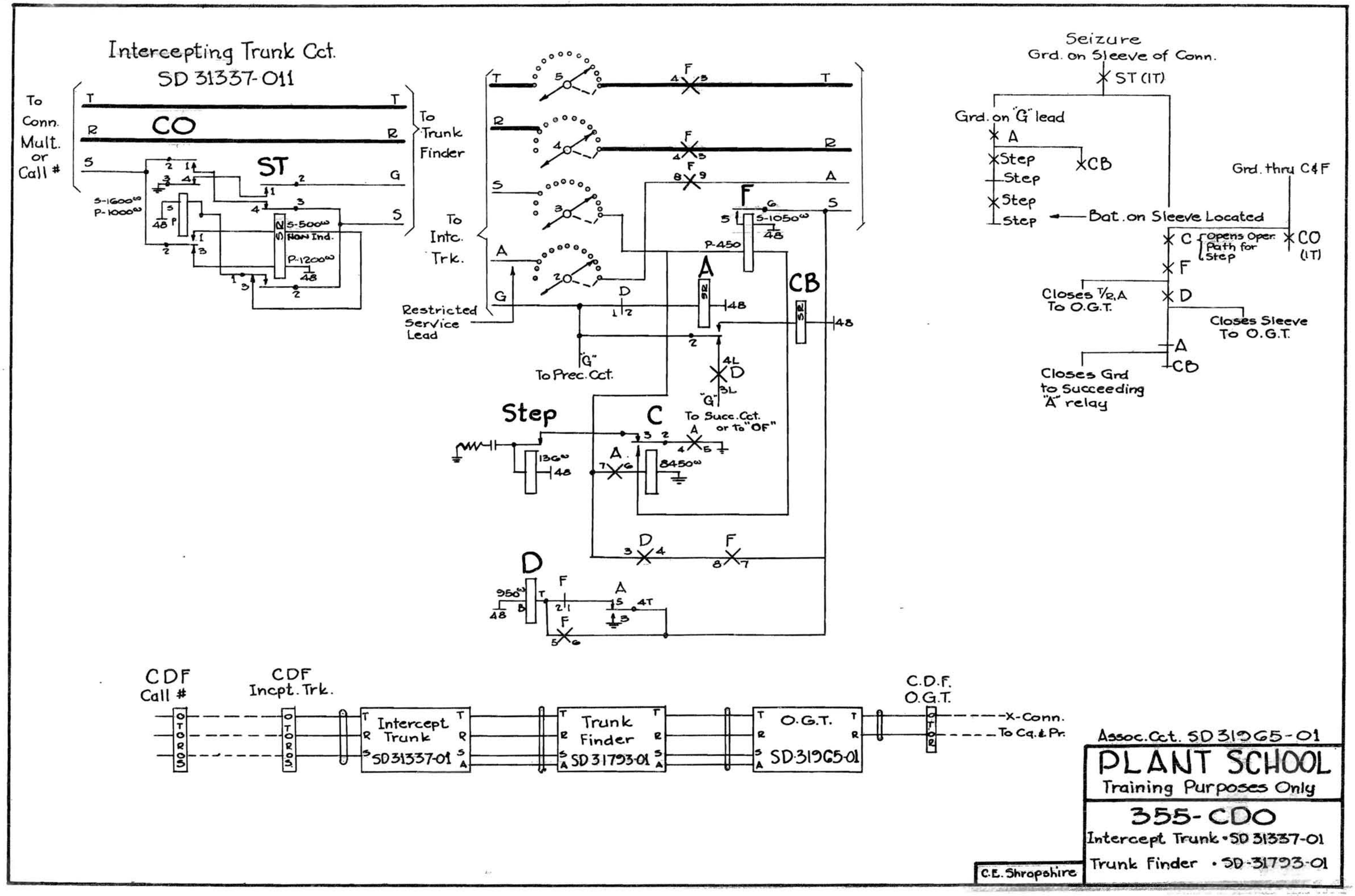
Intercepting Trunk Cct.
SD 31337-011
To Conn. Mult. or Call #
CO
ST
To Trunk Finder
To Intc. Trk.
Restricted Service Lead
"G" To Prec. Cct.
Step
C
A
CB
D
F
To Succ. Cct. or To "OF"
Seizure
Grd. on Sleeve of Conn.
ST (IT)
Grd. on "G" lead
Step
CB
Grd. thru C&F
Bat. on Sleeve Located
C
opens Oper. Path for Step
CO (IT)
Closes T/2, A To O.G.T.
Closes Sleeve To O.G.T.
Closes Grd to Succeeding "A" relay
CDF Call #
CDF Incpt. Trk.
Intercept Trunk SD31337-01
Trunk Finder SD31793-01
O.G.T. SD31965-01
C.D.F. O.G.T.
X-Conn.
To Cq. & Pr.
Assoc. Cct. SD 31965-01
PLANT SCHOOL
Training Purposes Only
355-CDO
Intercept Trunk • SD 31337-01
Trunk Finder • SD-31793-01
C.E. Shropshire

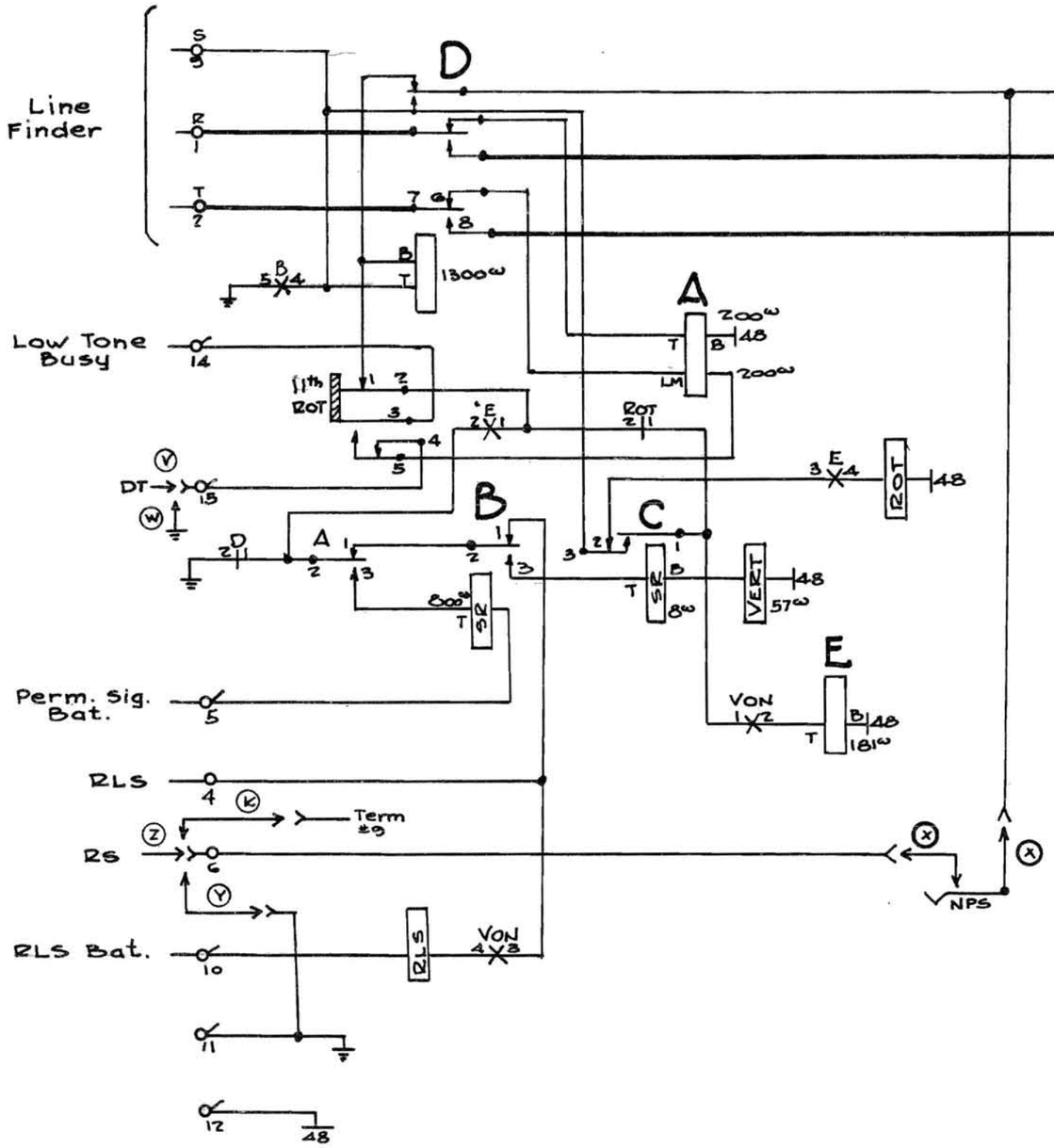

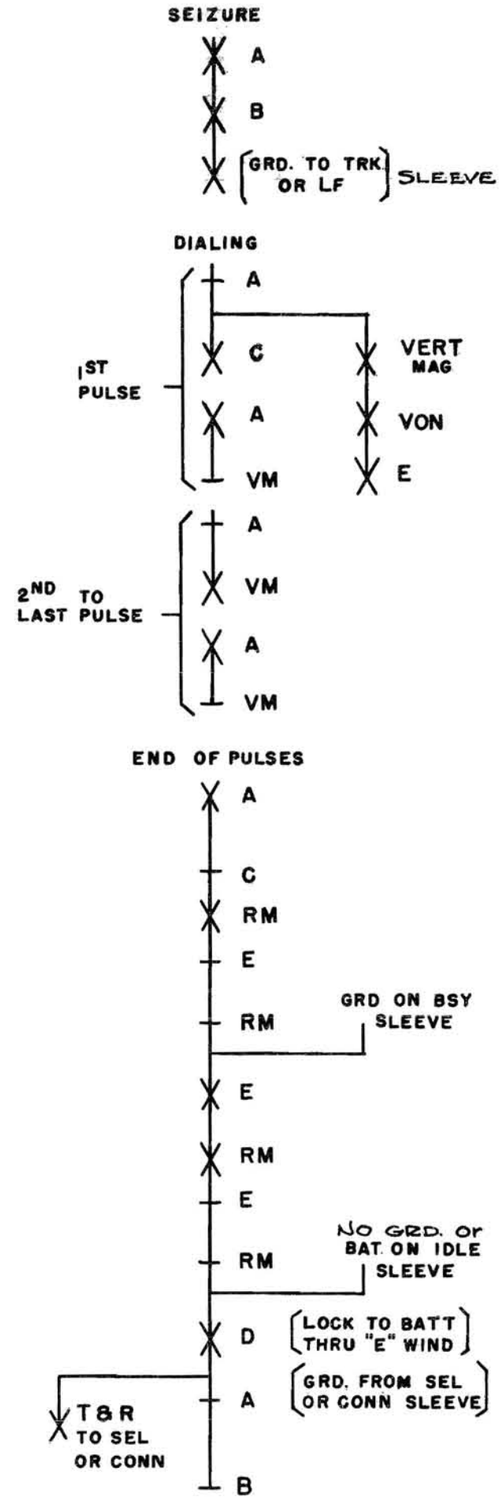

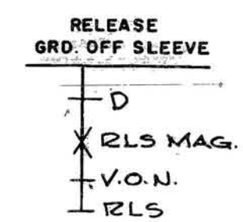

PLANT SCHOOL
For Training Purposes Only.

355A CDO

LOCAL OR INCOMING SELECTOR

SD31735-011

Shropshire

Local Call

Seizure
Short T/R

A
B
Grds Sleeves

Pulsing

Vertical

A
C — Vert. — Y.O.N.
A
Vert.
A
Vert.
A
Vert.
C

Rotary

A
Rot. — E
A — K
Rot — "MS" lead
A
Rot.
A
Rot
E

Rotary Code Selector

A
C — Rot C.S. — O.N. Code Sel.
A
Rot.C.S.
A
Rot C.S.
A
Rot.C.S.
C

Line Tests Busy

A
C — Rot Code Sel.
O.N Code Sel.
Grd on Sleeve → J
Busy Tone to Calling Sub. — C — Rot. C Sel.

Line Tests Idle

No Grd on Sleeve → C
M (Locks to "B")
Pick up Grd.
G
Starts Ringing

Sub. Ans.

Sub Short — F (Locks to "B")
G
D
Rev. Batt. to Calling Sub. Eq. — Rls C.Sel — Rls C.Sel. — O.N. Code Sel.

Calling Party Perm.

Called Sub. Hangs Up
D
Closes Supv. lead
Times Out. } Assoc. Cct.
Alarm

Toll Call

Seizure
Short T/R

A — H (Locks to Grd) on Sleeve
B — F (Hold to "C" lead)
Grds. Loc. Sl.

Pulsing

Same as Local

Busy Test

J
L — C — Rot. C. Sel.
60 or 120 I.P.M.
To Operator.

Line Tests Idle

C
M } Looks to toll sleeve
L
Chg. holding Path for "A" thru Res. Wind H To Toll Sleeve!

Operator Rings

Grd. Off "C" lead
F
Pick Up
G
Ringing Starts

Sub. Answers

F
G — Closes T/R to Trans. Sel.

Operator Rerings

Grd. Off "C" lead
F
Pick Up
G
Starts Ring

Local Call

Calling Sub. Hangs Up

A
C
B
F — K — M — C
Rls
V.O.N.
Rls.

Toll Call

Operator Releases
Grd. Off "C" lead - Grd Off Sleeve

F
M — A — H — L
B
Rls — K
V.O.N. — Rls. C. Sel.
Rls.

PLANT SCHOOL
TRAINING PURPOSES ONLY

C.E. SHROPSHIRE

355 CDO
COMBINATION CONNECTOR
5 CODE T.P. LINE
SD 31741-011

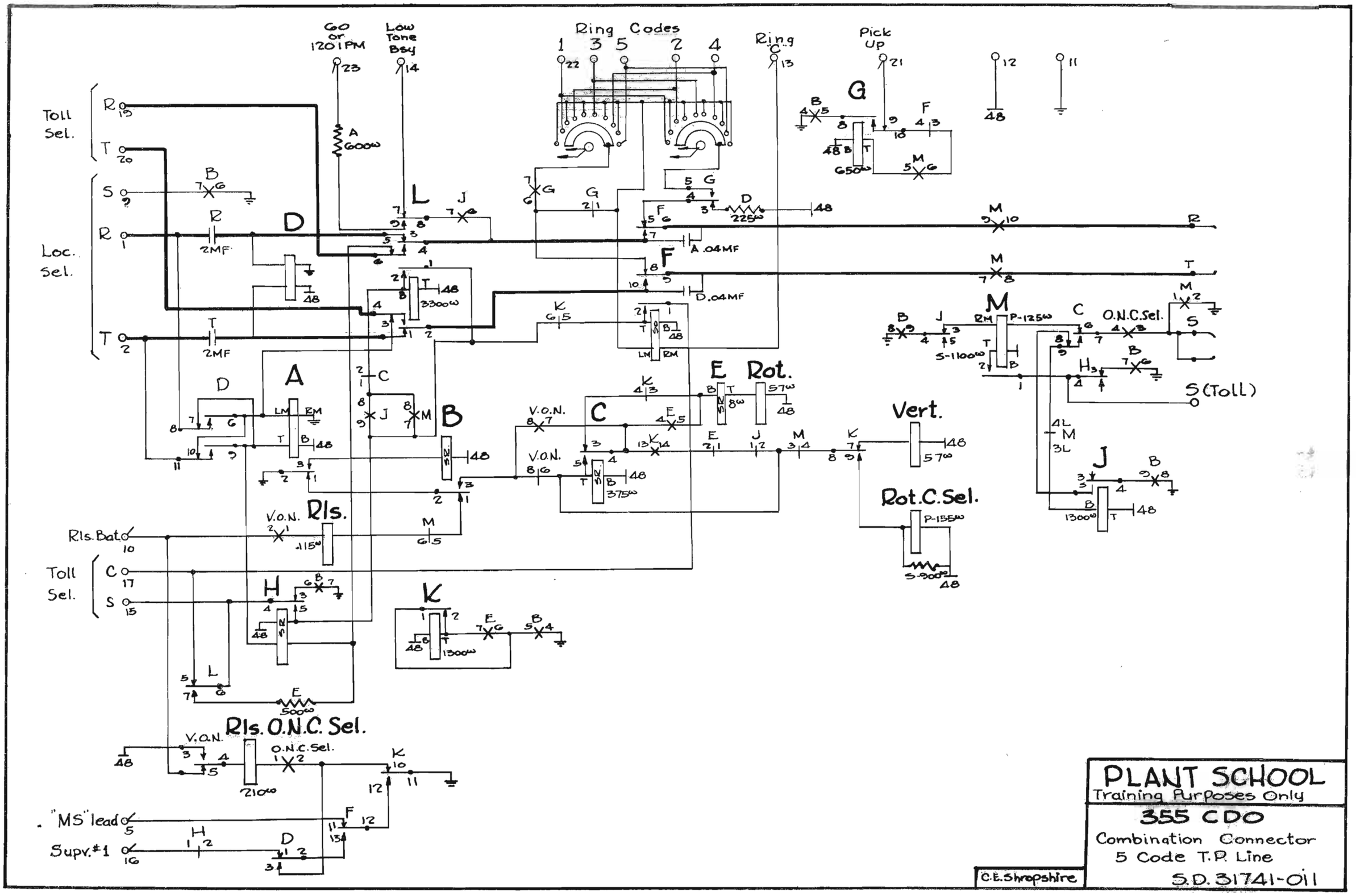

PLANT SCHOOL

Training Purposes Only

355 CDO

Combination Connector
5 Code T.P. Line

S.D. 31741-011

C.E. Shropshire

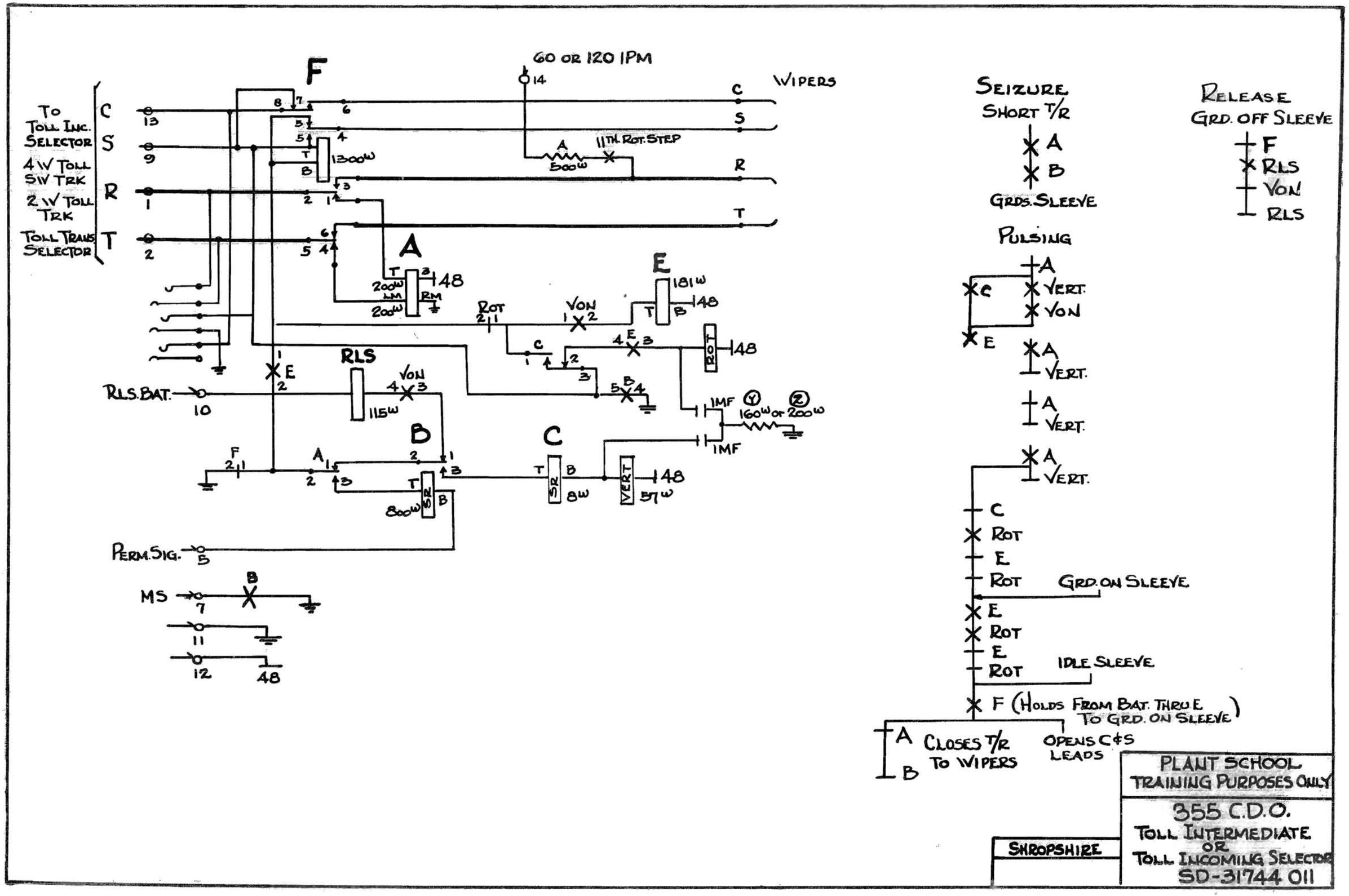
F
60 OR 120 IPM
14
WIPERS
C
S
R
T
TO TOLL INC. SELECTOR
4 W TOLL SW TRK
2 W TOLL TRK
TOLL TRANS SELECTOR
13
9
1
2
1300W
A
500W
11TH. ROT. STEP
A
200W
200W
48
E
181W
ROT
VON
RLS
115W
RLS. BAT.
10
B
800W
SR
C
8W
VERT
57W
1MF
160W OR 200W
PERM. SIG.
5
MS
7
11
12
SEIZURE
SHORT T/R
A
B
GRDS. SLEEVE
RELEASE
GRD. OFF SLEEVE
F
RLS
VON
RLS
PULSING
VERT.
GRD. ON SLEEVE
IDLE SLEEVE
F (HOLDS FROM BAT. THRU E TO GRD. ON SLEEVE)
CLOSES T/R TO WIPERS
OPENS C&S LEADS
PLANT SCHOOL
TRAINING PURPOSES ONLY
355 C.D.O.
TOLL INTERMEDIATE OR TOLL INCOMING SELECTOR
SD-31744 011
SHROPSHIRE

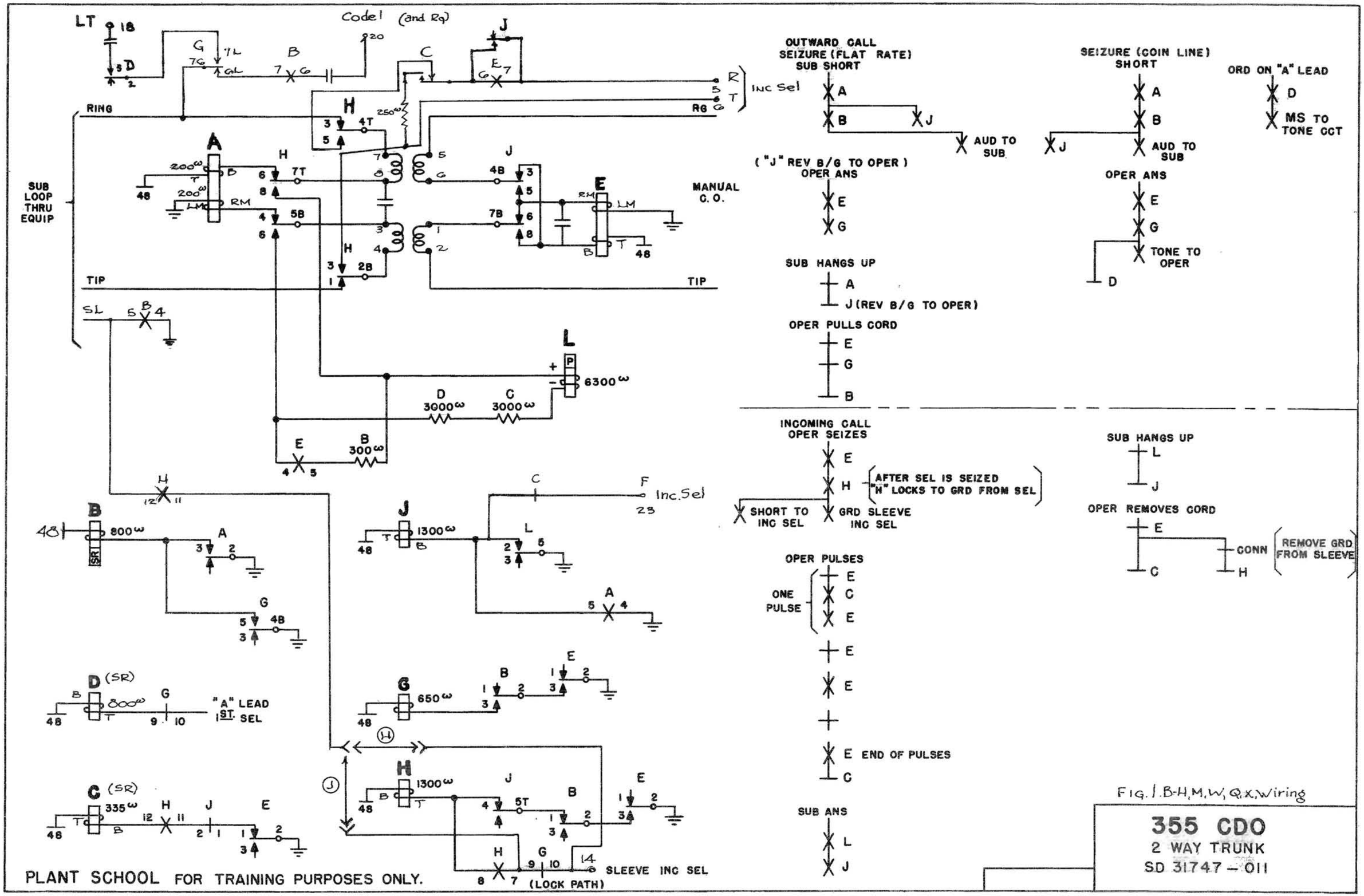

Fig. 1. B-H, M, W, Q, X, Wiring

PLANT SCHOOL FOR TRAINING PURPOSES ONLY.

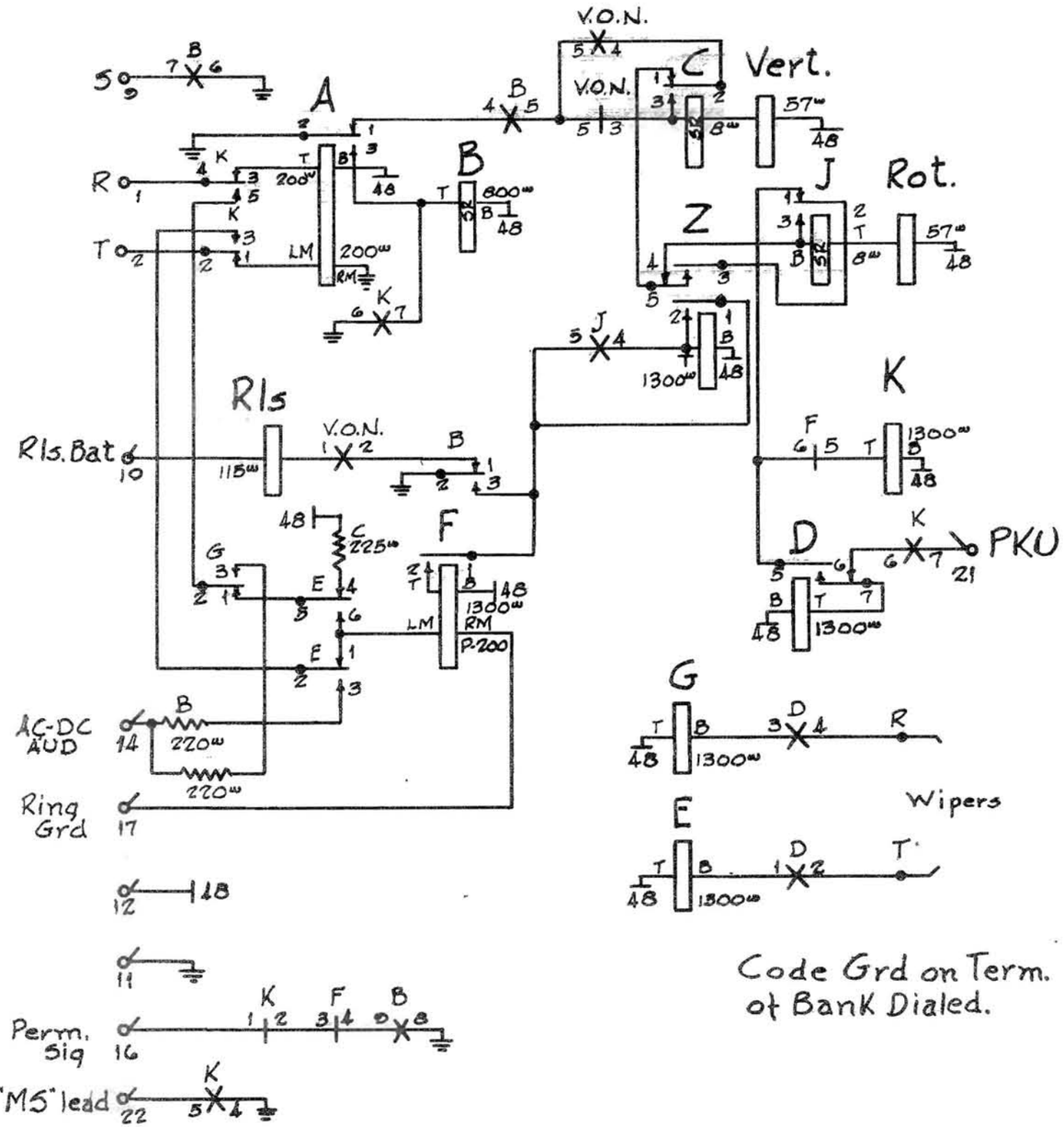

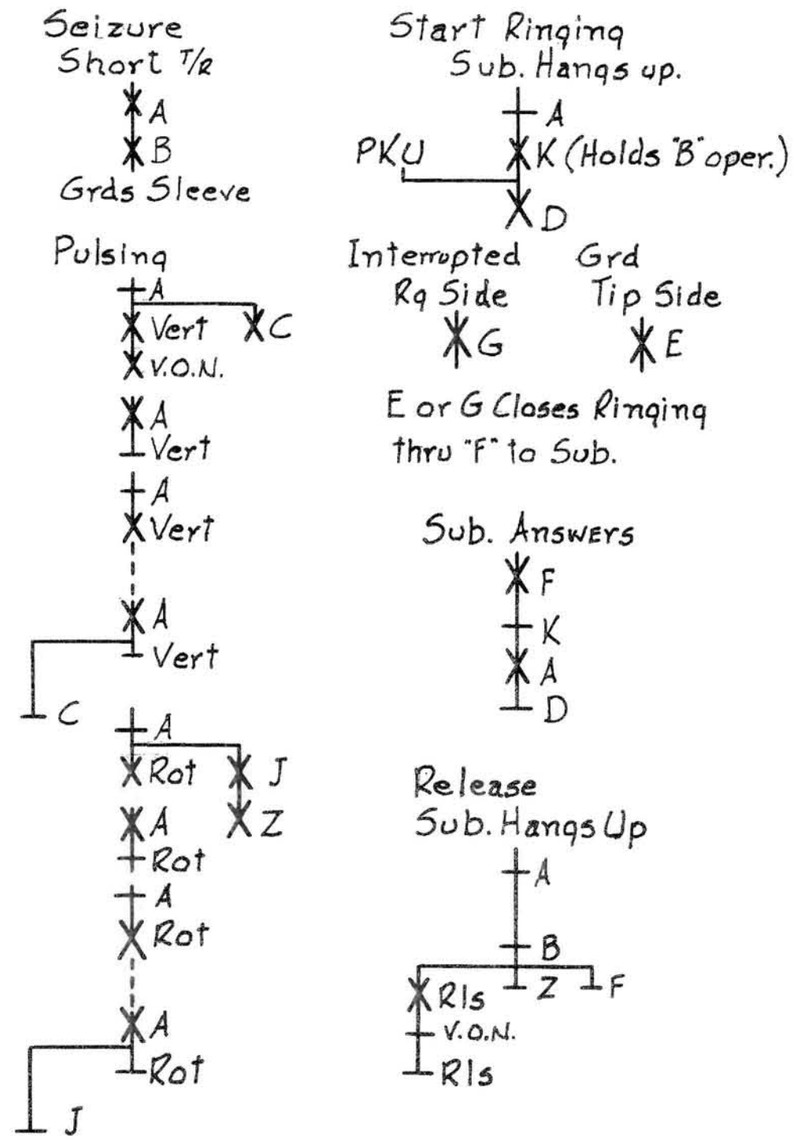

PLANT SCHOOL
Training Purposes Only

355 CDO
Reverting Call Selector
Fig I.C. Y Wiring
SD 31762-011

C.E. Shropshire

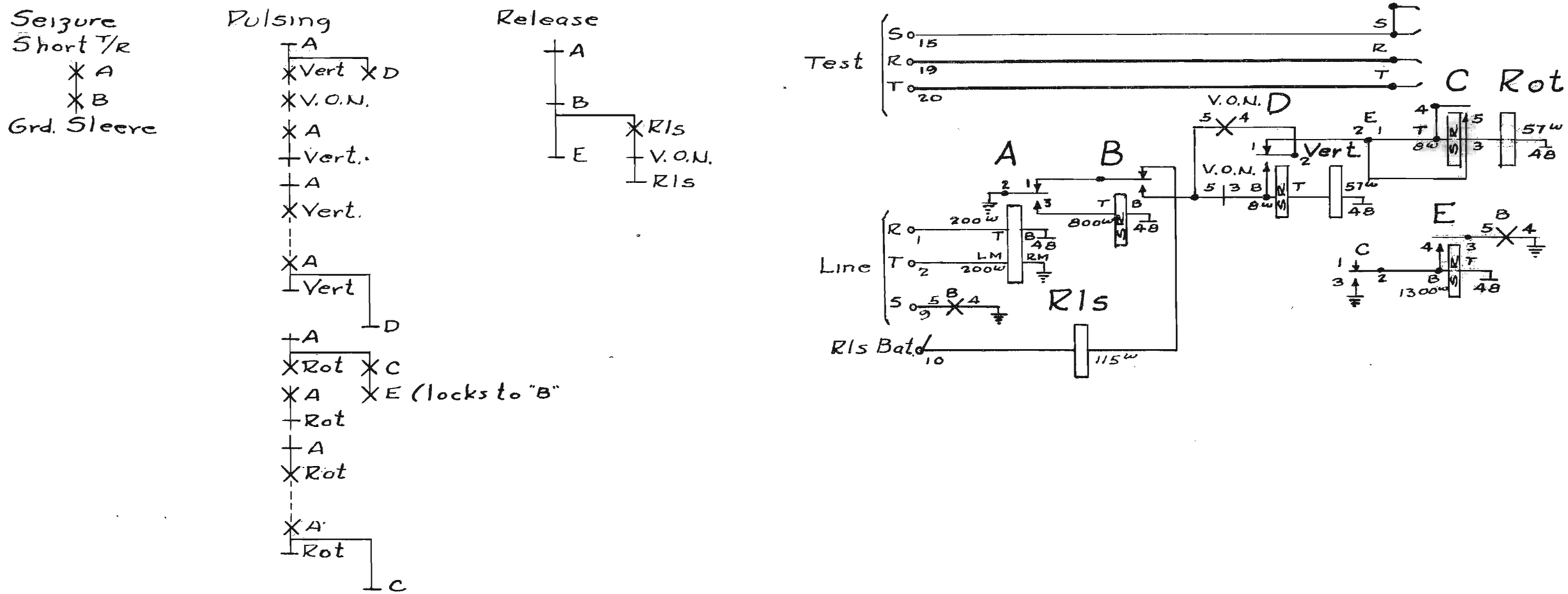

PLANT SCHOOL
TRAINING PURPOSES ONLY

355 C.D.O.
TEST CONNECTOR

SD 31773-011

C.E. Shropshire
5-10-51

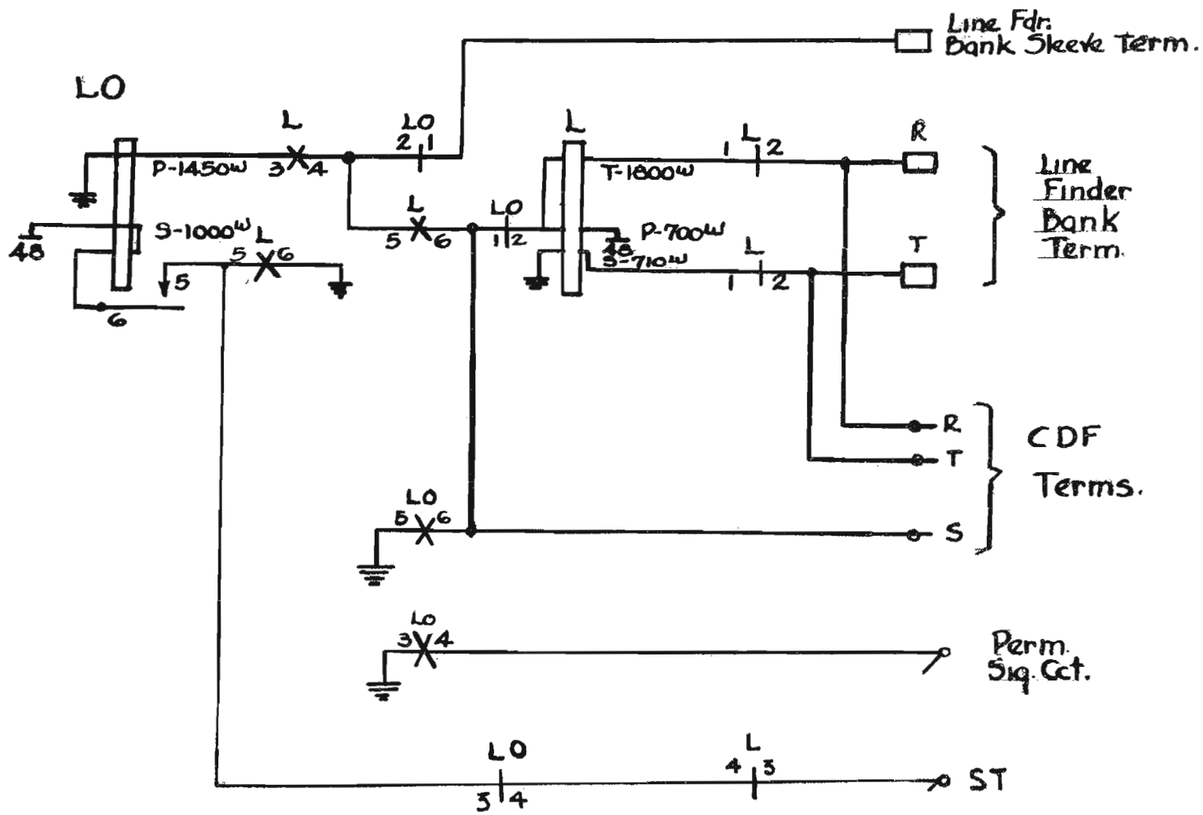

Plant School
Training Purposes Only

355 CDO

Sub. Line Cct. SD31777-01

C.E. Shropshire

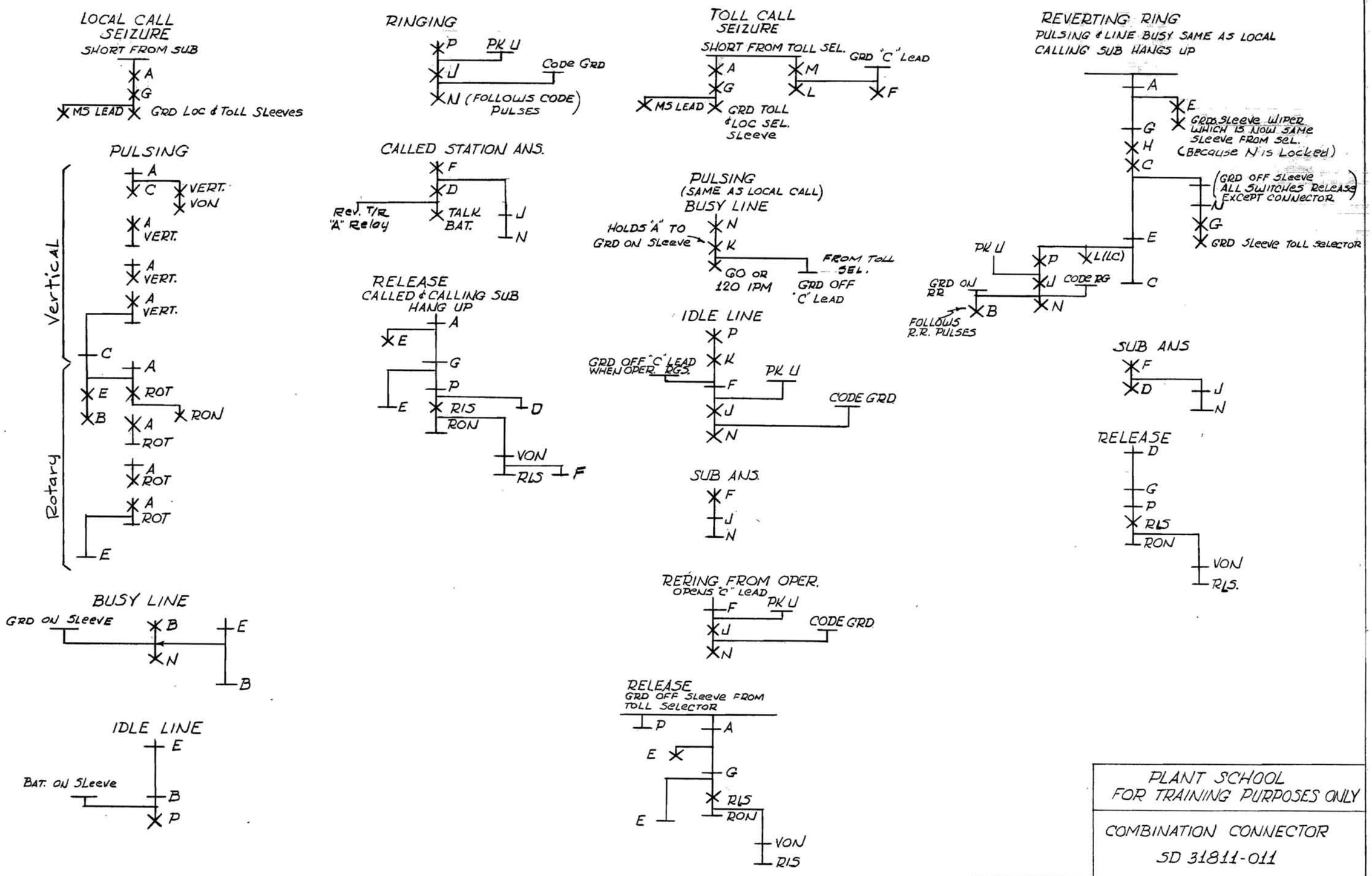

PLANT SCHOOL
FOR TRAINING PURPOSES ONLY

COMBINATION CONNECTOR
SD 31811-011

C. SHROPSHIRE

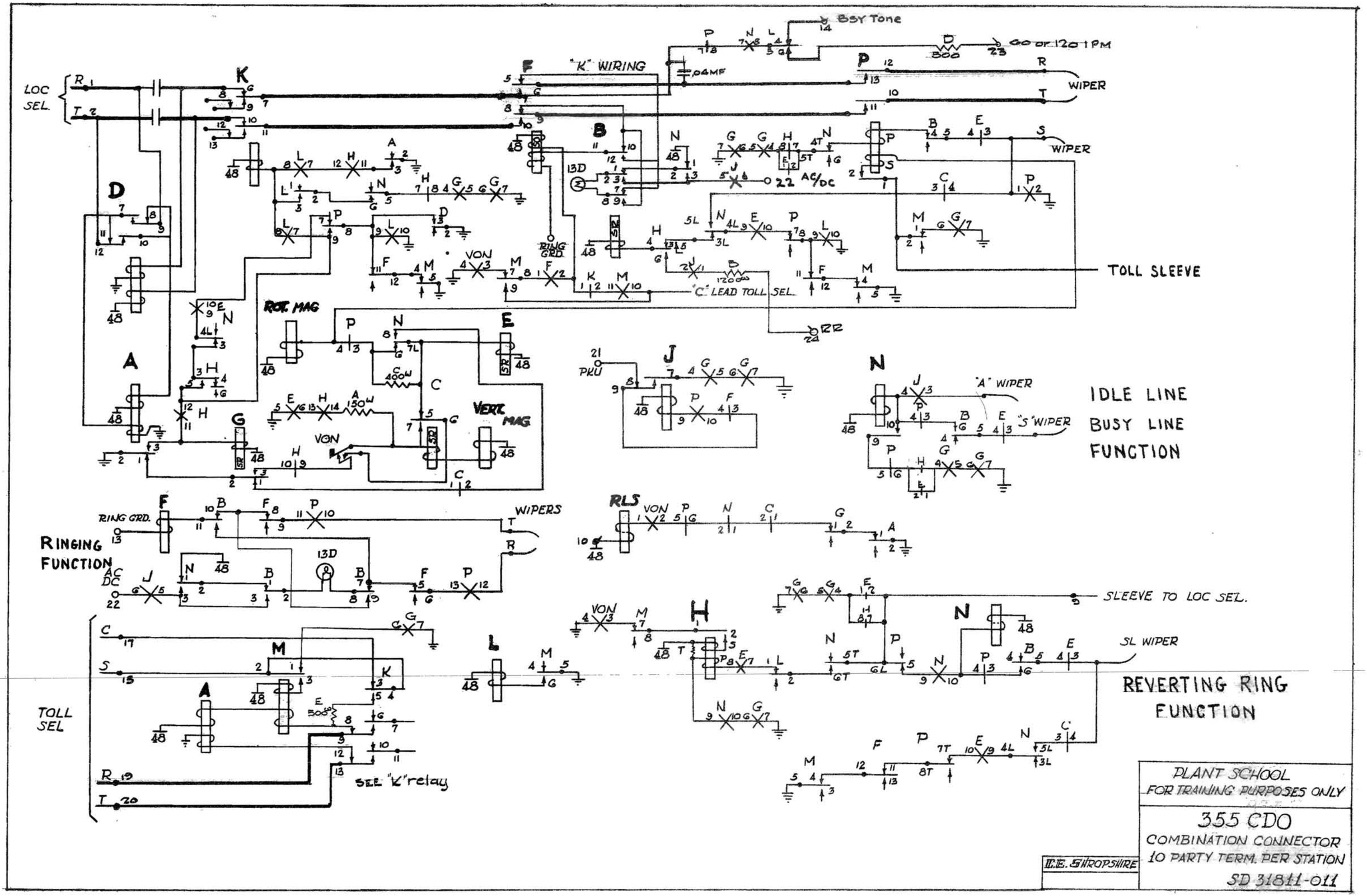
LOC SEL.
"K" WIRING
BSY Tone
60 or 120 PM
WIPER
WIPER
TOLL SLEEVE
"C" LEAD TOLL SEL.
ROT. MAG
VERT. MAG
PKU
"A" WIPER
"S" WIPER
IDLE LINE
BUSY LINE
FUNCTION
RING GRD.
WIPERS
RINGING
FUNCTION
SLEEVE TO LOC SEL.
SL WIPER
REVERTING RING
FUNCTION
TOLL
SEL
SEE "K" relay
PLANT SCHOOL
FOR TRAINING PURPOSES ONLY
355 CDO
COMBINATION CONNECTOR
10 PARTY TERM. PER STATION
SD 31811-011
D.E. SHROPSHIRE

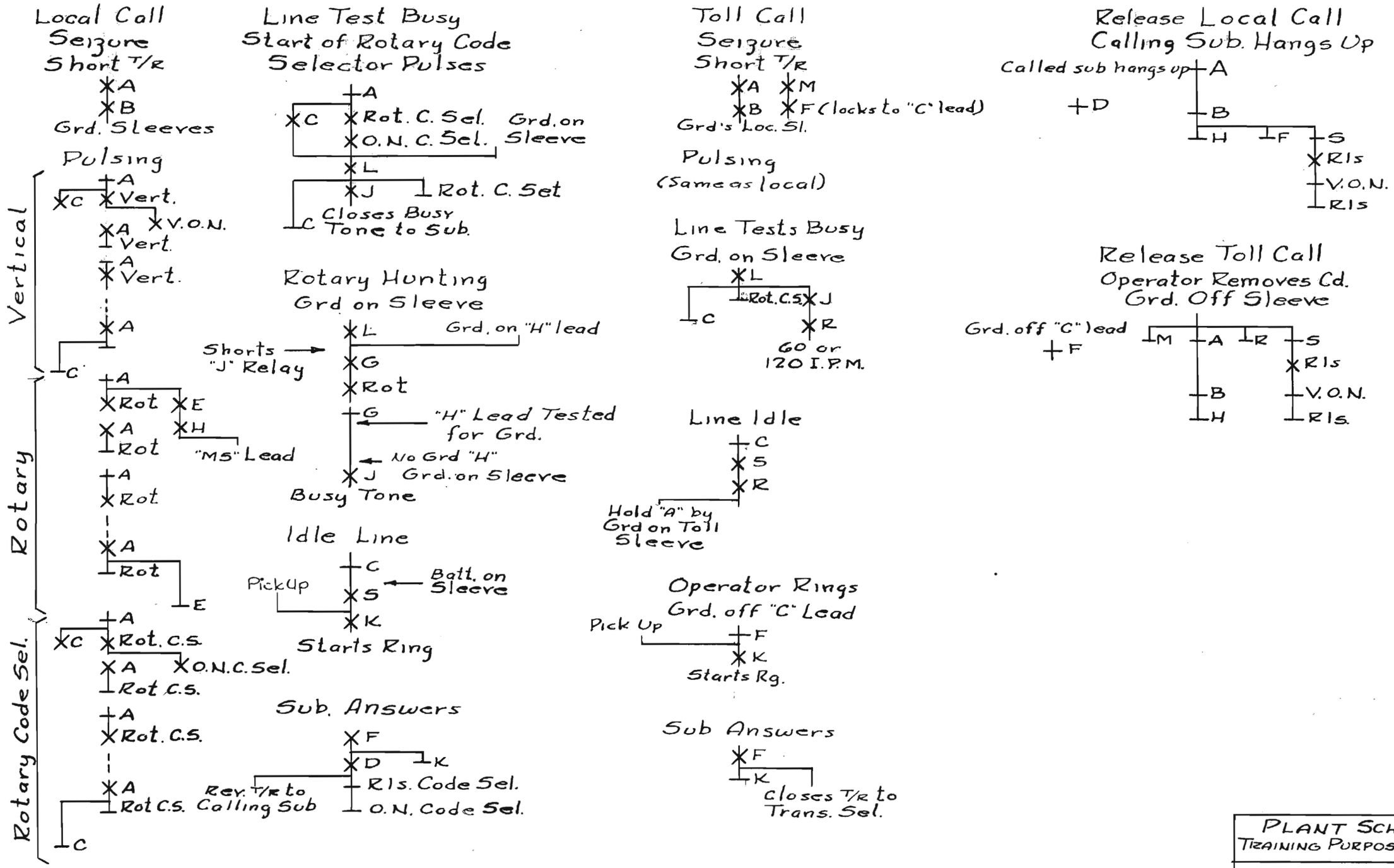

PLANT SCHOOL
TRAINING PURPOSES ONLY

355 C.D.O.
Combination Connector
Rotary Hunting 5 Code
SD-31819-011

C.E. Shropshire

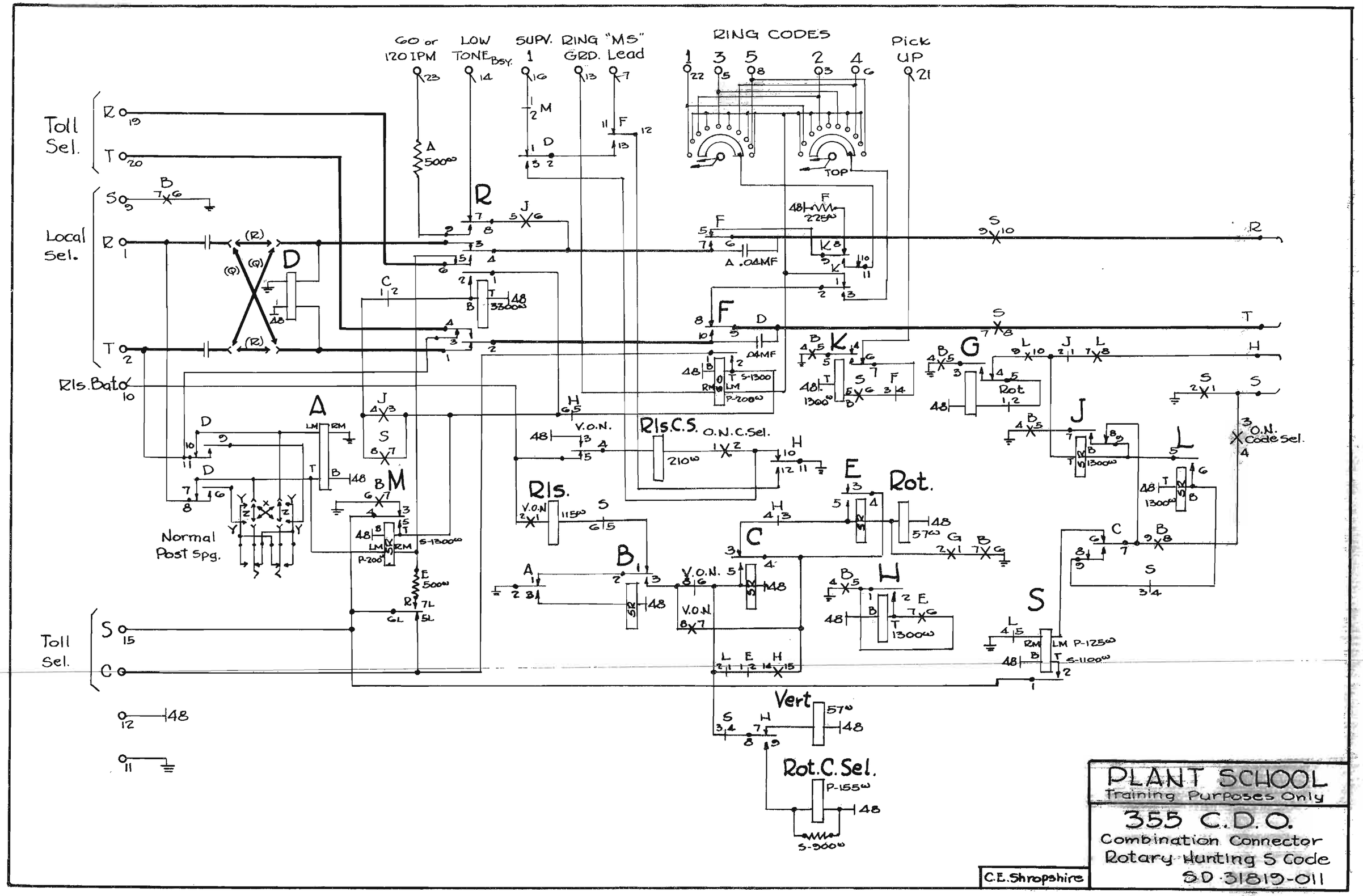
60 or 120 IPM
LOW TONE
BSY.
SUPV. 1
RING GRD.
"MS" Lead
RING CODES
Pick UP
TOP
Toll Sel.
Local Sel.
Rls. Bat.
Normal Post Spg.
Toll Sel.
V.O.N.
Rls.C.S.
O.N.C.Sel.
Rls.
Rot.
Vert
Rot.C.Sel.
O.N. Code Sel.
PLANT SCHOOL
Training Purposes Only
355 C.D.O.
Combination Connector
Rotary Hunting S Code
SD-31819-011
C.E. Shropshire

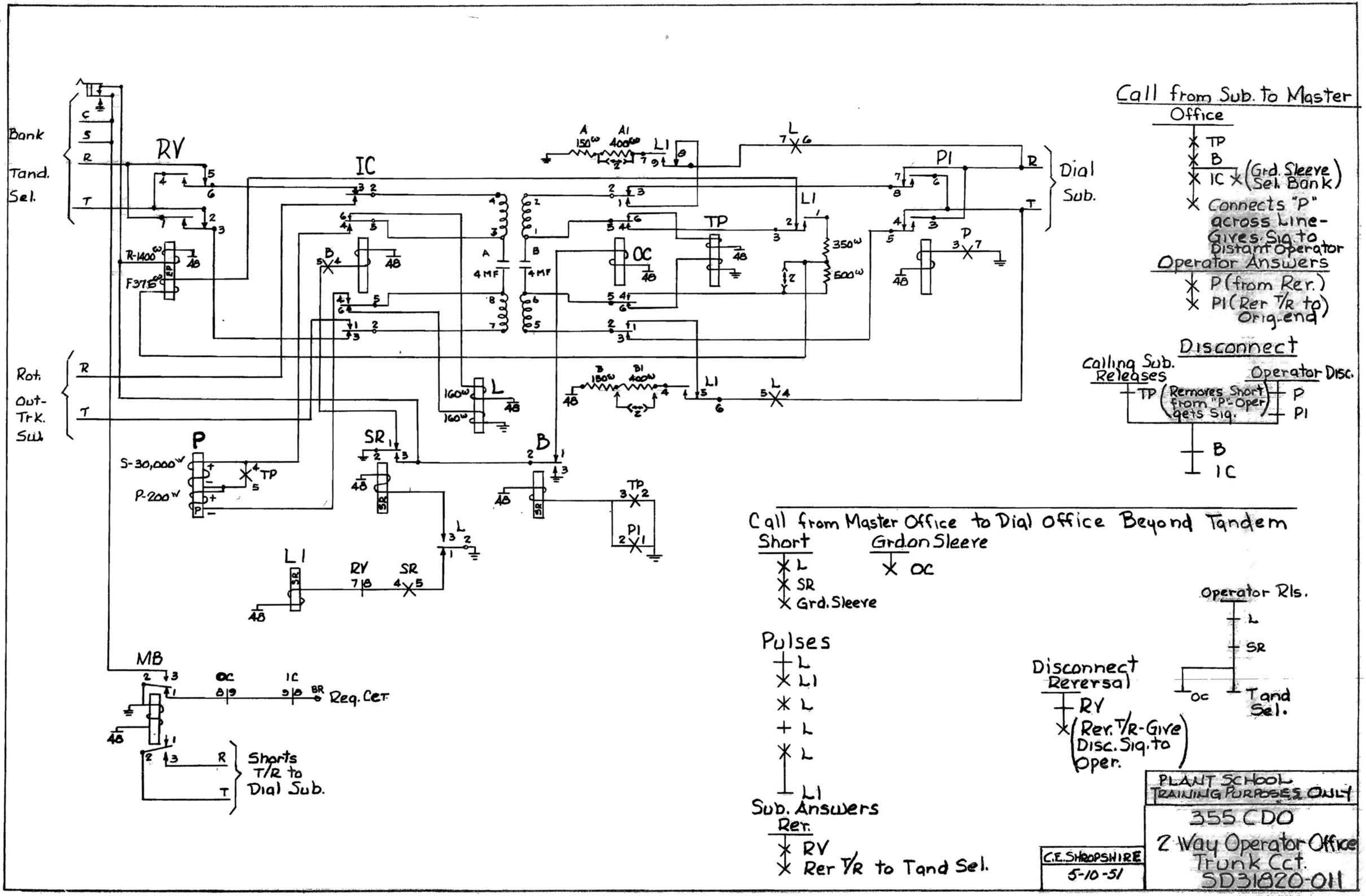
Bank
Tand. Sel.
C
S
R
T
RV
IC
R-1400ω
F3715ω
4MF
4MF
A
B
OC
TP
L
L1
P1
R
T
Dial Sub.
350ω
500ω
D
Rot. Out-Trk. Sw.
R
T
160ω
160ω
P
S-30,000ω
P-200ω
TP
SR
B
TP
P1
L1
RV
SR
MB
OC
IC
BR
Req. Cet.
Shorts T/R to Dial Sub.
R
T
Call from Sub. to Master Office
TP
B
IC (Grd. Sleeve Sel. Bank)
Connects "P" across Line-Gives Sig. to Distant Operator
Operator Answers
P (from Rer.)
P1 (Rer T/R to Orig. end)
Disconnect
Calling Sub. Releases
TP (Removes Short from "P"-Oper gets Sig.)
B
IC
Operator Disc.
P
P1
Call from Master Office to Dial Office Beyond Tandem
Short
L
SR
Grd. Sleeve
Grd. on Sleeve
OC
Pulses
L
L1
L
L
L
L1
Sub. Answers
Rer.
RV
Rer T/R to Tand Sel.
Operator Rls.
L
SR
OC
Tand Sel.
Disconnect Reversal
RV
(Rer. T/R-Give Disc. Sig. to Oper.)
PLANT SCHOOL TRAINING PURPOSES ONLY
355 CDO
2 Way Operator Office Trunk Cct.
SD31820-011
C.E. SHROPSHIRE
5-10-51

Sub Dials Operator

Short fr. Loc. Set — Grd on Sleeve

L — OC

SR (Holds "OC")

Grds Sleeve — Shorts Sec "P" Gives Oper. Sig.

Class of Service Tone Used

Grd. on "A" Lead

TN

Oper. Answers Reversal

P

PI

Closes tone "B" Ring Side Line — TN

Disconnect

Called Party Disc.

L

Removes Short from "P" Sec. Oper. gets Sig.

Oper. Disc. Reversal

P

PI

SR

CC

Operator Dials Sub

Short fr. Distant Office

A

B

IC

Grds. Sleeve

Pulsing

Repeat for each pulse of digit.

A

TC

C — TO — LU

TC

TO — LUI

A

LU — LUI

C (End of Digit)

Busy Line or Trk. (Fig B)

Interupted Grd on "F" Lead

BY

BY — Rev. B/G to Trk.

Sub. Answers

Rev. on T/R

RV

Rev. B/G to Oper.

Fig. B

RV

BY

Rev. B/G to Oper.

Disconnect

Called Party Hangs Up

Rev. from Conn.

RV

Rev. B/G To Oper.

Fig B

RV

BY

Rev. B/G To Oper.

Oper. Disc.

A

TC

TO — LU

TC

TO — LUI

B

IC — LU — LUI

Fuse Failure

MB

Grds Sleeve — Shorts T/R to Tand. Office

Plant School
Training Purposes Only

355 C.D.O.
2-Way Operator Office
Trunk-Tandem Operator
SD 31822-011

C. E. SHROPSHIRE
3-17-51

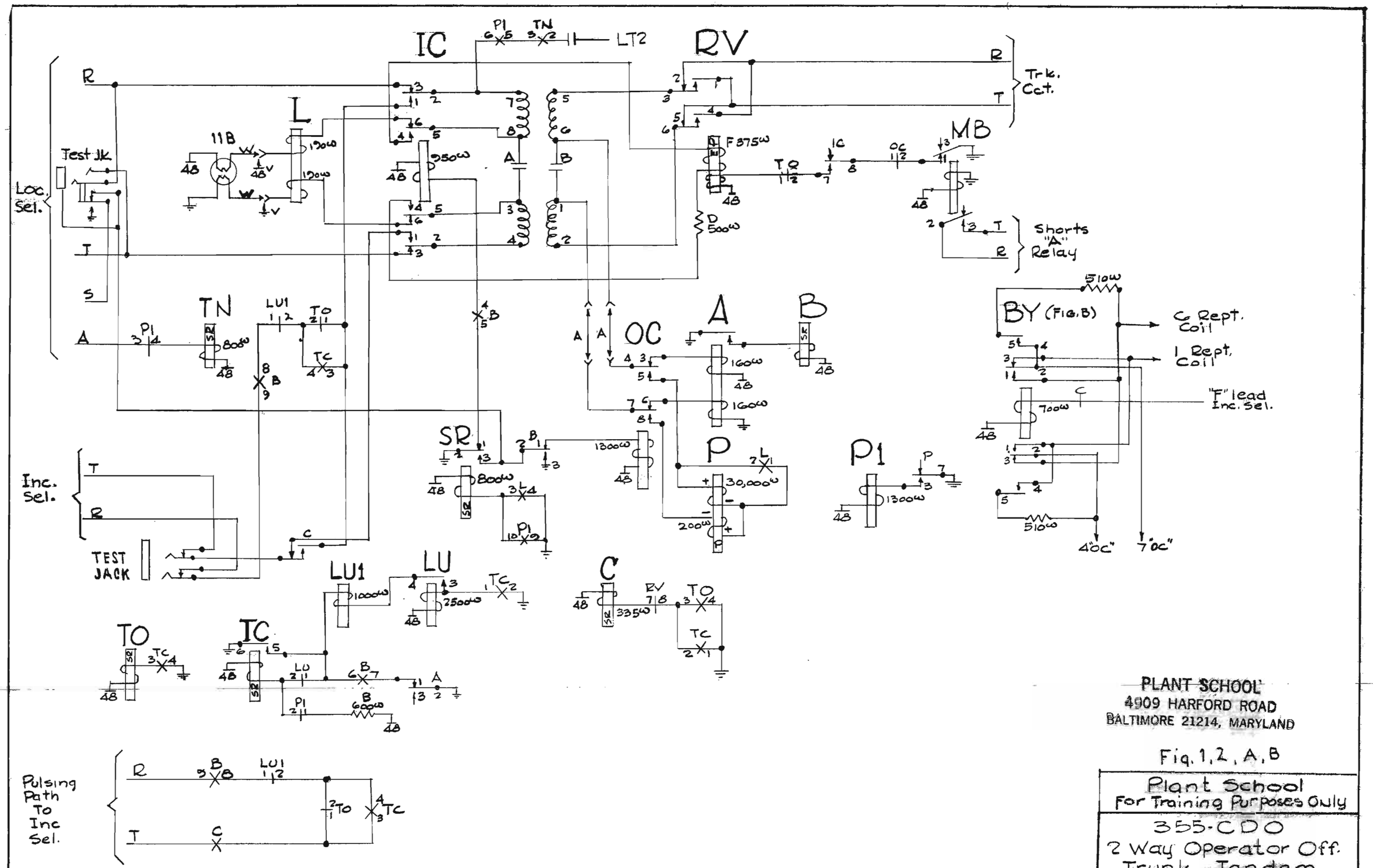

PLANT SCHOOL
4909 HARFORD ROAD
BALTIMORE 21214, MARYLAND

Fig. 1, 2, A, B

Plant School
For Training Purposes Only

355-CDO
2 Way Operator Off.
Trunk - Tandem.
SD-31822-011

C.E. Shropshire

Outgoing Call
Seizure

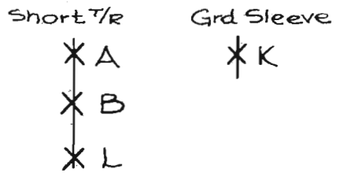

Pulsing

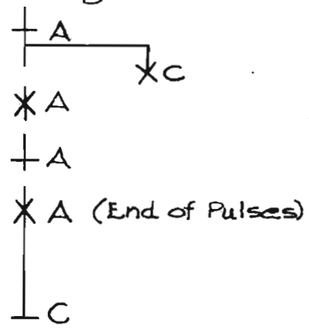

Called Party Ans.
Rev. B/G

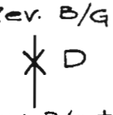

Rev. B/G to Calling Equip.

Incoming Call
Short from Trk.

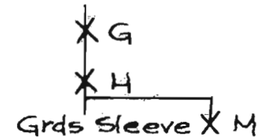

Pulsing

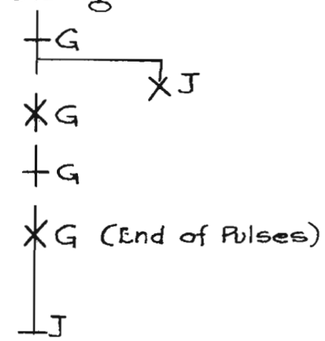

Called Party Answ.
Rev. B/G from Conn.

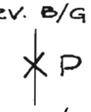

Rev. B/G To Trk.

Disconnect
Outgoing Call

Called Sub. Hangs Up.

Rev B/G

Calling Sub. Hangs Up.

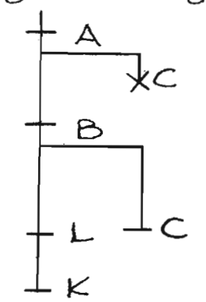

Incoming Call
Called Sub. Hangs Up

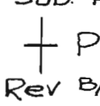

Rev B/G

Calling Sub. Hangs Up.

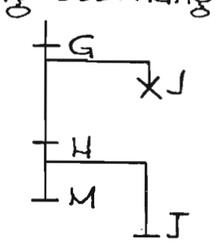

PLANT SCHOOL
Training Purposes Only

355 CDO
2 way Interlocal Trunk
SD 31842-011

shropshire

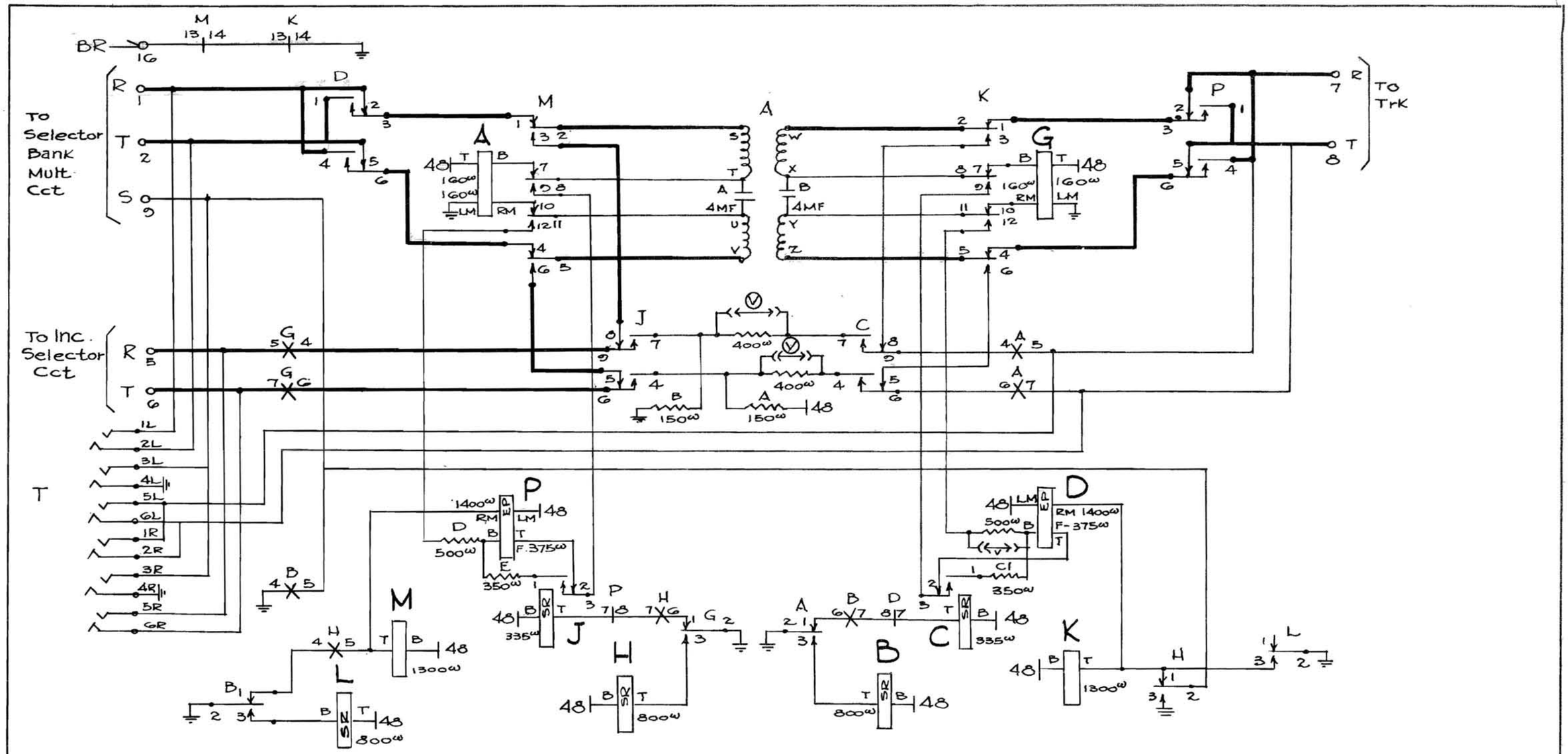
BR
To Selector Bank Mult. Cct
To Inc. Selector Cct
T
To Trk
PLANT SCHOOL
Training Purposes Only
355 CDO
2 WAY INTERLOCAL TRK CCT.
Repeat Dial Pulses
SD 31842-011
Shropshire.

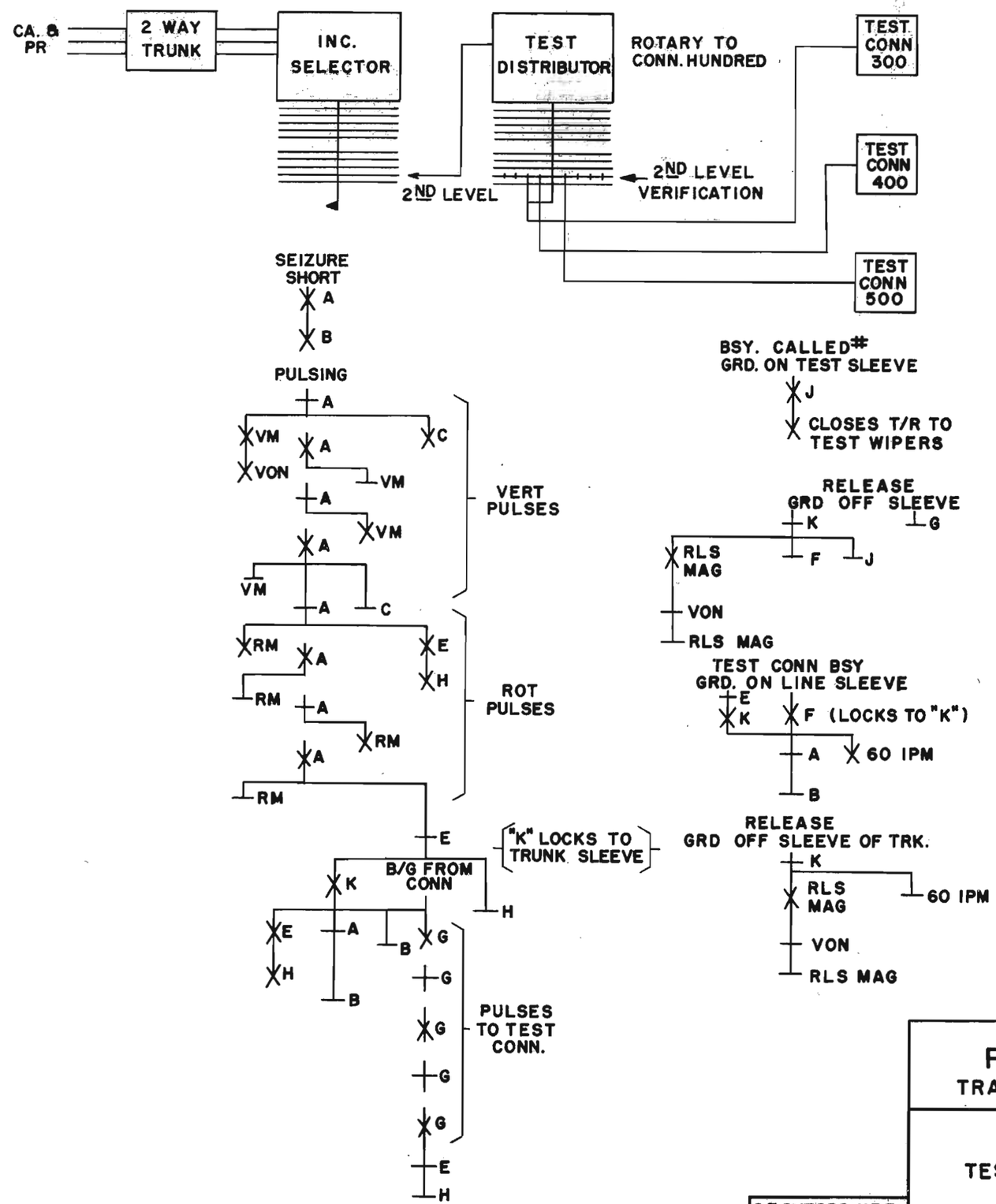

PLANT SCHOOL
TRAINING PURPOSES ONLY

355-CDO

TEST DISTRIBUTOR CIRCUIT
SD-31851-011

C.E.SHROPSHIRE

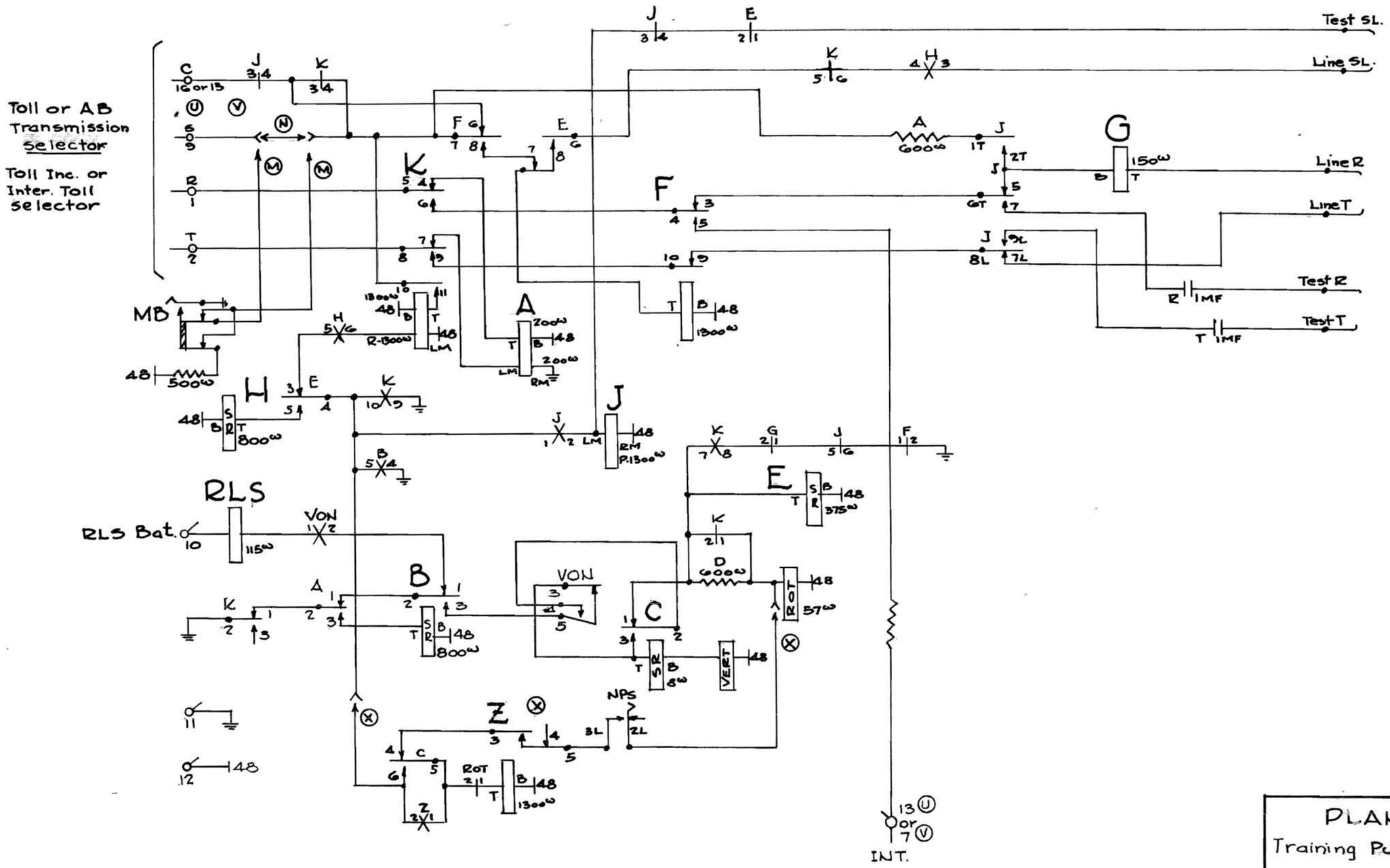

Fig. 2

PLANT SCHOOL
Training Purposes Only

355 - CDO
Test Distributor
SD-31851-011

Shropshire.

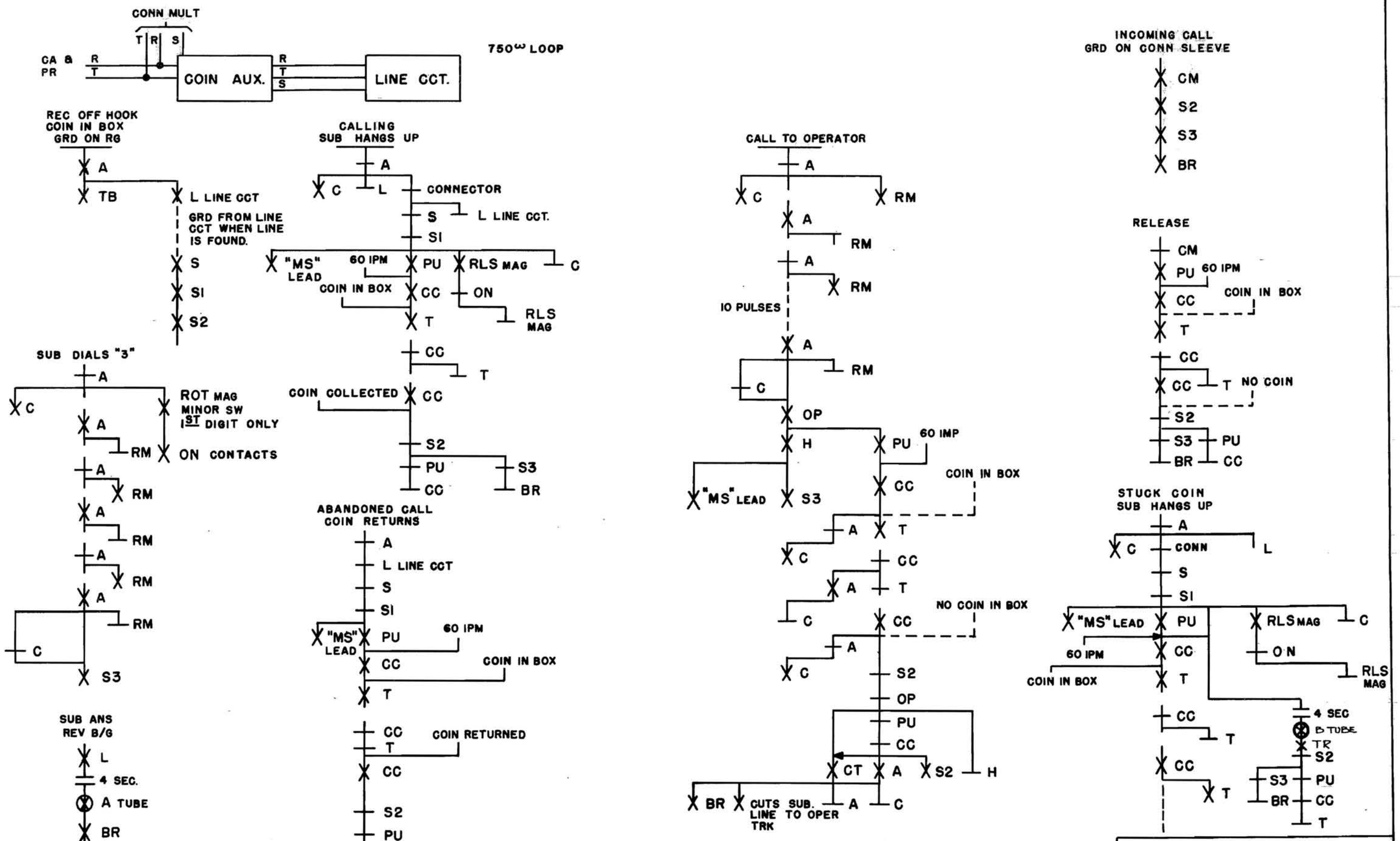

355 CDO

AUX. COIN LINE CCT.

SD 31873-011

C.E. Shropshire

PLANT SCHOOL FOR TRAINING PURPOSES ONLY.

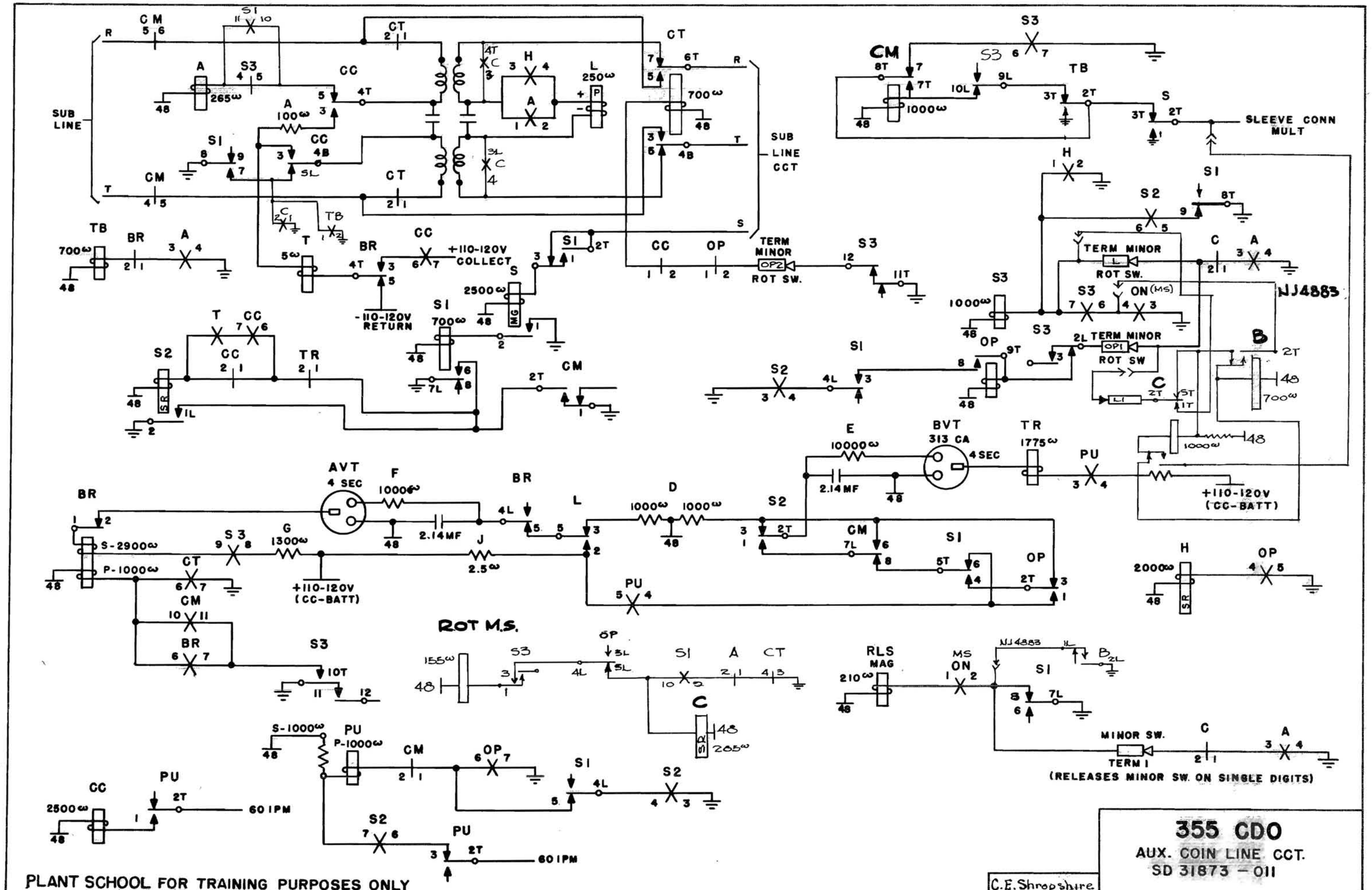
SUB LINE
SUB LINE CCT
SLEEVE CONN MULT
+110-120V COLLECT
-110-120V RETURN
TERM MINOR
ROT SW.
ROT M.S.
+110-120V (CC-BATT)
NJ4883
TERM MINOR
ROT SW
MINOR SW.
TERM I
(RELEASES MINOR SW. ON SINGLE DIGITS)
60 IPM
PLANT SCHOOL FOR TRAINING PURPOSES ONLY
C.E. Shropshire
355 CDO
AUX. COIN LINE CCT.
SD 31873 - 011

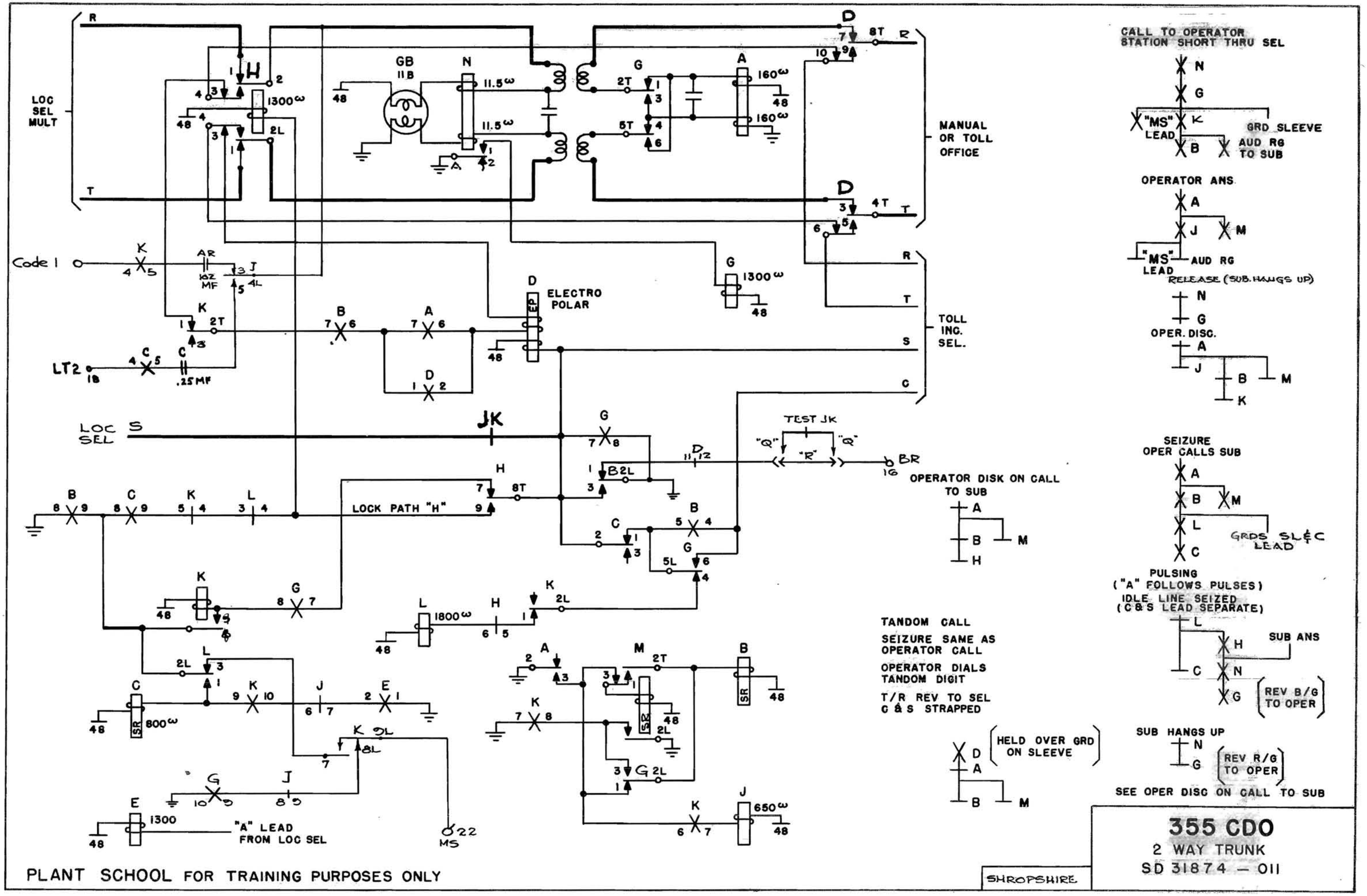
LOC SEL MULT
R
T
H
1300ω
GB 11B
N
11.5ω
11.5ω
G
2T
5T
A
160ω
160ω
D
8T
4T
MANUAL OR TOLL OFFICE
Code 1
K
AR
10Z MF
J
4L
G
1300ω
D
ELECTRO POLAR
B
A
LT2
C
.25MF
TOLL ING. SEL.
S
C
LOC SEL S
JK
G
D
B2L
TEST JK
"Q"
"R"
"Q"
BR
OPERATOR DISK ON CALL TO SUB
A
B
M
H
B
C
K
L
LOCK PATH "H"
8T
C
B
G
5L
K
G
L
1800ω
H
2L
L
2L
C
SR
800ω
K
J
E
K
2L
8L
G
J
E
1300
"A" LEAD FROM LOC SEL
22 MS
A
M
2T
B
SR
K
2L
G 2L
K
J
650ω
TANDOM CALL
SEIZURE SAME AS OPERATOR CALL
OPERATOR DIALS TANDOM DIGIT
T/R REV TO SEL
C & S STRAPPED
D
A
B
M
HELD OVER GRD ON SLEEVE
CALL TO OPERATOR STATION SHORT THRU SEL
N
G
"MS" LEAD
K
GRD SLEEVE
B
AUD RG TO SUB
OPERATOR ANS.
A
J
M
"MS" LEAD
AUD RG
RELEASE (SUB. HANGS UP)
N
G
OPER. DISC.
A
J
B
M
K
SEIZURE
OPER CALLS SUB
A
B
M
L
GRDS SL&C LEAD
C
PULSING
("A" FOLLOWS PULSES)
IDLE LINE SEIZED
(C & S LEAD SEPARATE)
L
H
SUB ANS
C
N
G
REV B/G TO OPER
SUB HANGS UP
N
G
REV R/G TO OPER
SEE OPER DISC ON CALL TO SUB
355 CDO
2 WAY TRUNK
SD 31874 — 011
SHROPSHIRE
PLANT SCHOOL FOR TRAINING PURPOSES ONLY

SELECTION OF MAIN OFFICE TRUNK

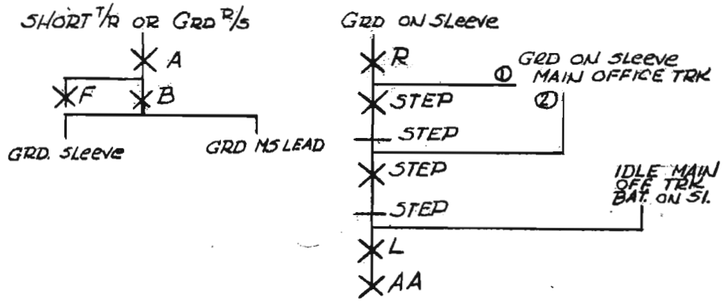

BRANCH OFFICE # DIALED

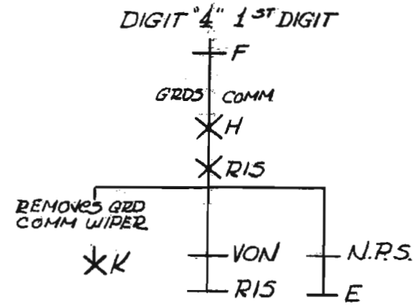

OPERATOR DIALED

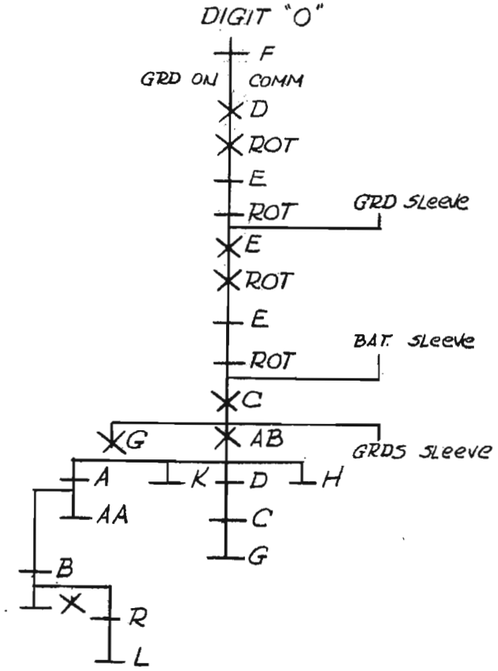

PULSING

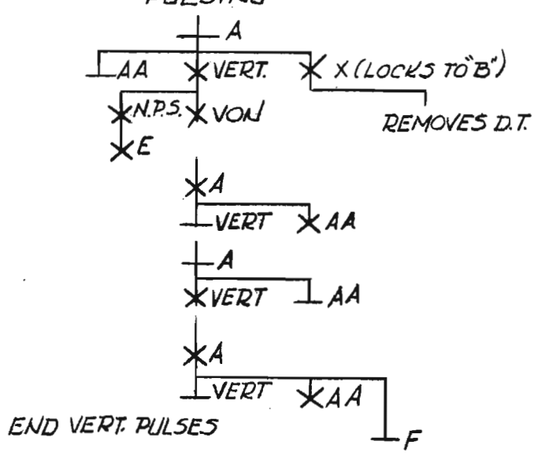

DIGIT "2" 2ND DIGIT

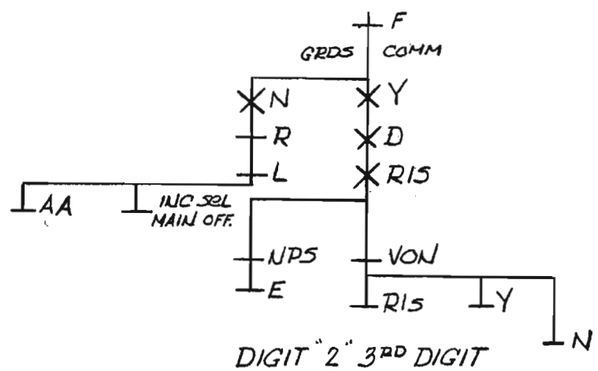

DIGIT "2" 3RD DIGIT

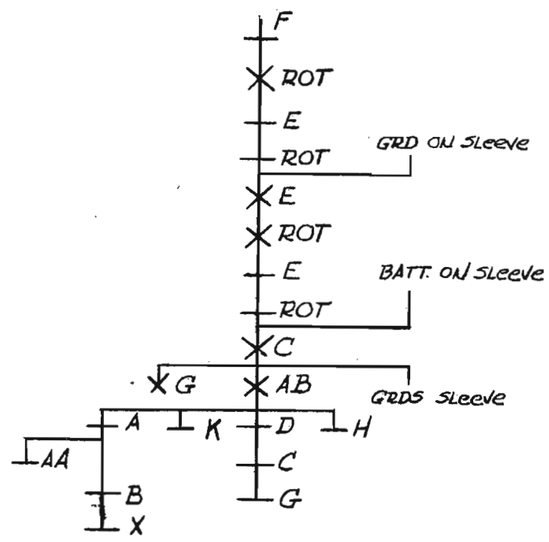

4TH & 5TH DIGITS DIALED ON CONNECTOR

MAIN OFFICE # DIALED

1ST DIGIT ABSORBED (SEE 1ST DIGIT BRANCH OFFICE CALL)

WHEN 2ND DIGIT IS 3,4,5,6,7,8,9

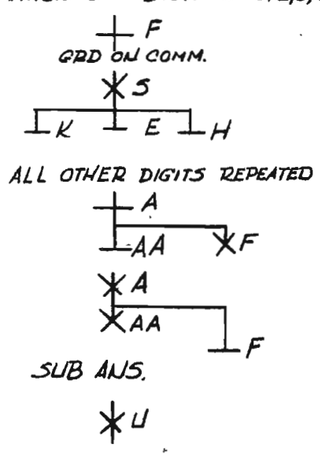

ALL TRUNKS BUSY TO MAIN OFFICE

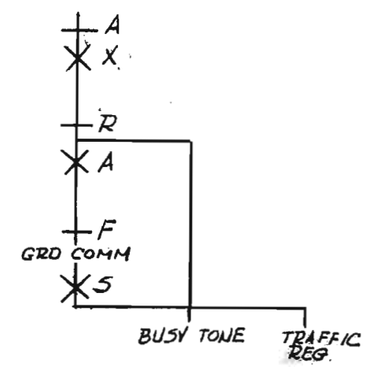

No. PLAN 400
N.R.S. OPTIONS

PLANT SCHOOL
TRAINING PURPOSES ONLY

355 CDO
SLECTOR REPEATERS
BEACH HAVEN 4-2

C.E. SHROPSHIRE

SD 31914-011

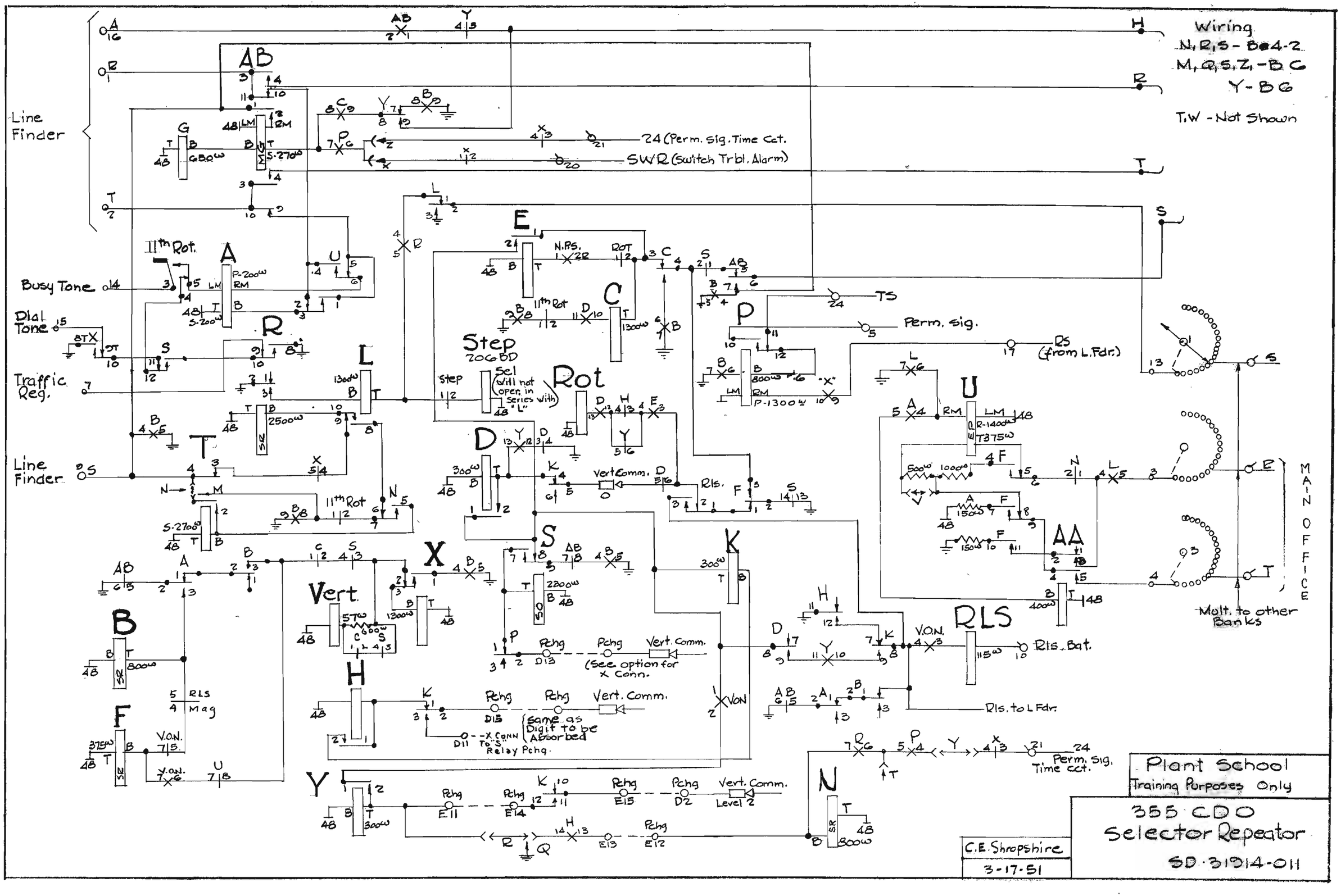
Wiring
N, R, S - B & 4-2
M, Q, S, Z, - B G
Y - B G
T.W - Not Shown
Line Finder
Busy Tone
Dial Tone
Traffic Reg.
Line Finder
11th Rot.
24 (Perm. sig. Time Cct.
SWR (Switch Trbl. Alarm)
Step
Rot
Vert.
Vert. Comm.
Pchg
(See option for X Conn.
Same as Digit to be Absorbed
X-Conn To "S" Relay Pchg.
Sel (Will not open in Series with "L")
N.P.S.
Perm. sig.
TS
RS (from L.Fdr.)
Rls.
Rls. Bat.
Rls. to L Fdr.
V.O.N.
Perm. sig. Time cct.
MAIN OFFICE
Mult. to other Banks
Plant School
Training Purposes Only
355 CDO
Selector Repeator
SD-31914-011
C.E. Shropshire
3-17-51

Talking Paths

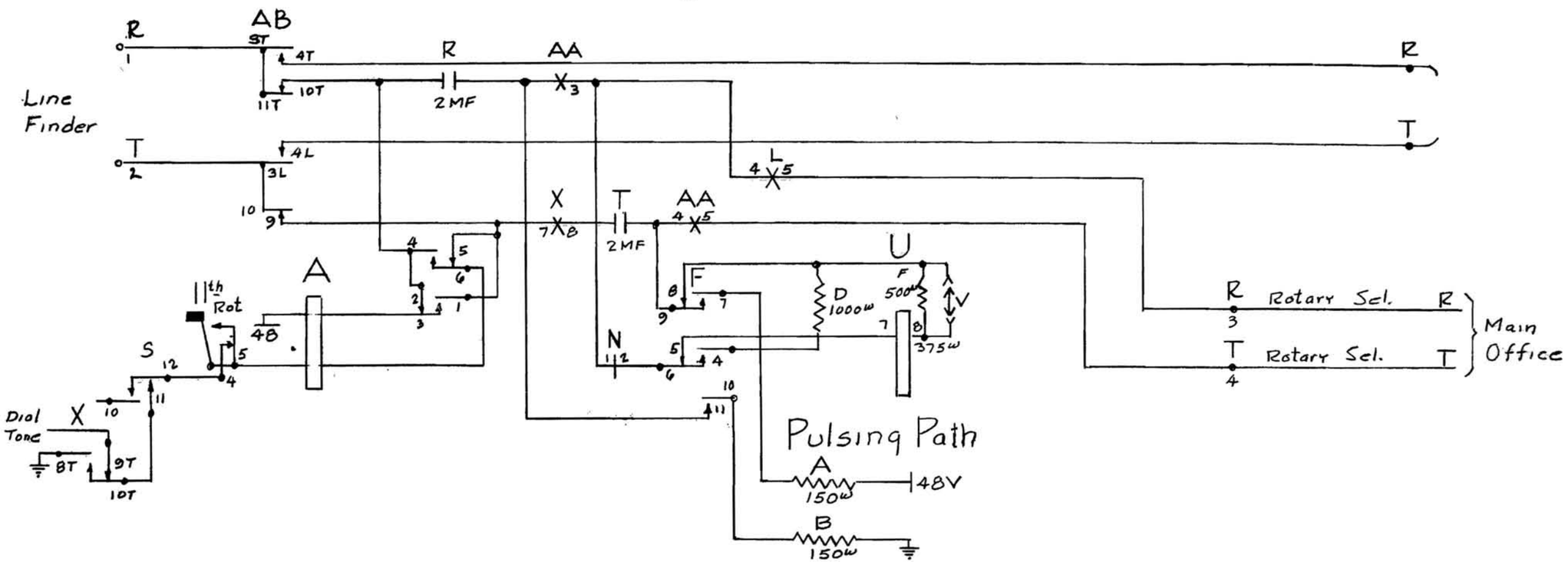

Plant School
Training Purposes Only

355 C.D.O.
Selector Repeater
SD 31914-01

C.E. SHROPSHIRE
3-17-51

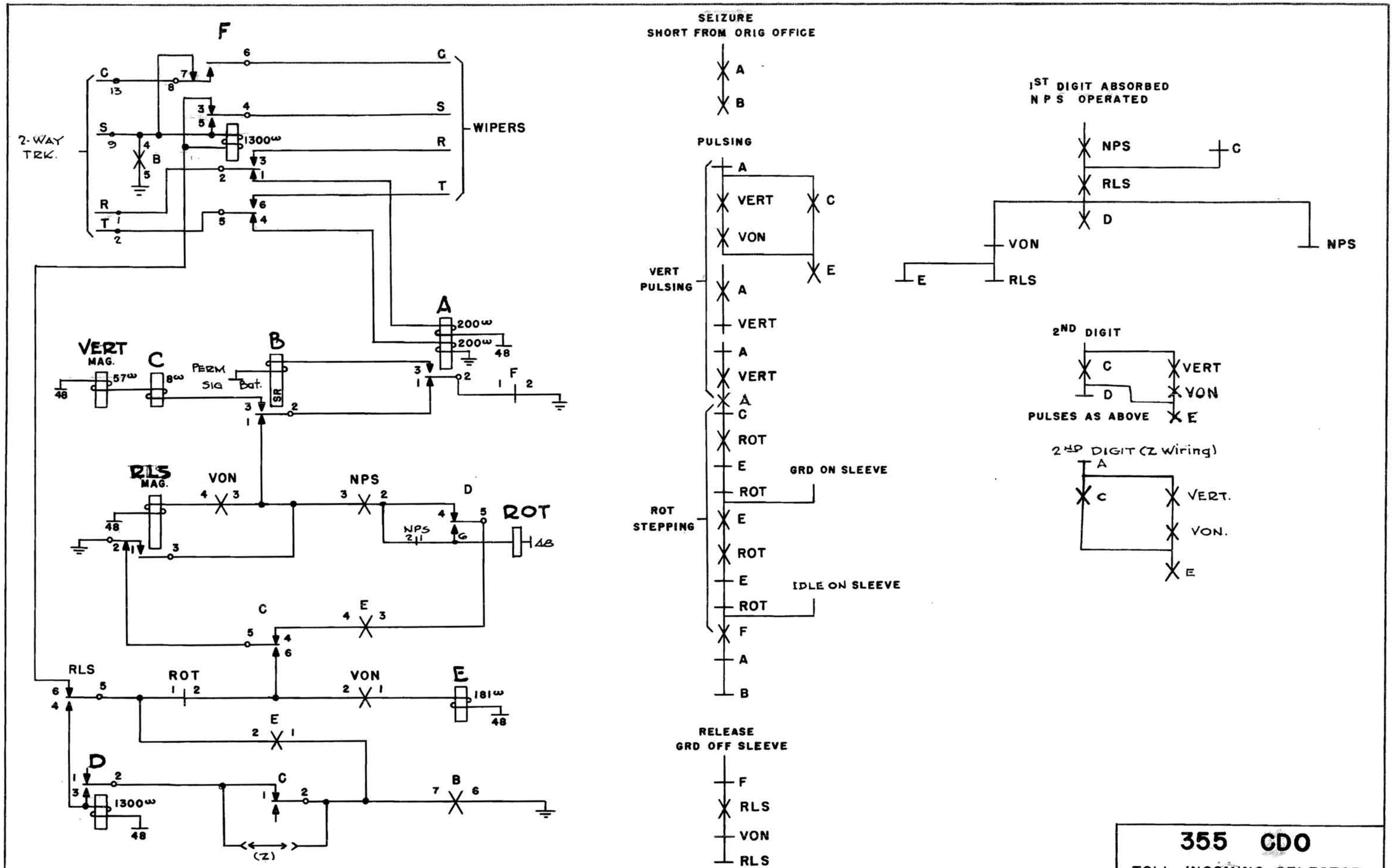

PLANT SCHOOL FOR TRAINING PURPOSES ONLY

Shropshire

355 CDO

TOLL INCOMING SELECTOR

SD 31915-011

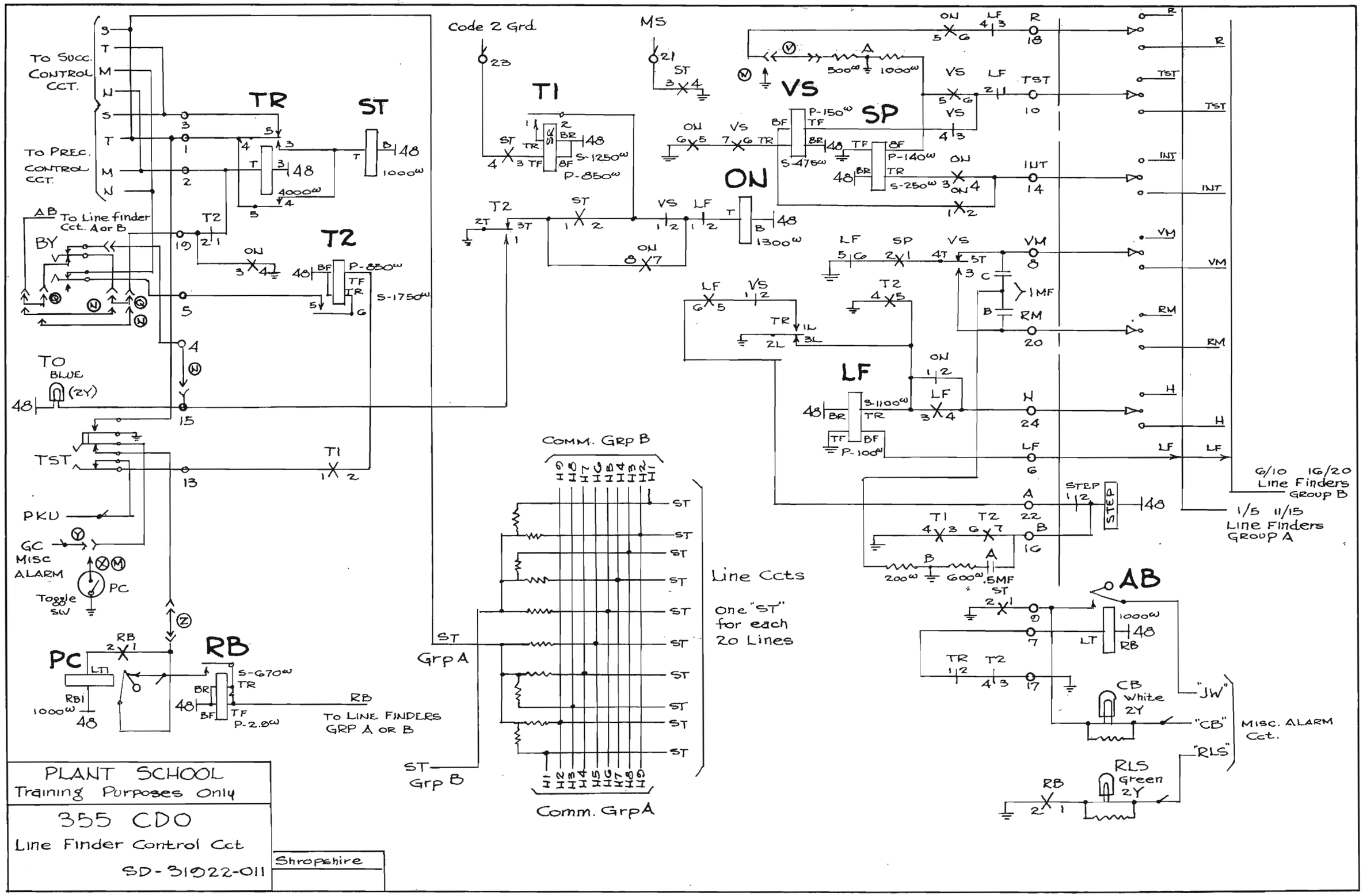

PLANT SCHOOL
Training Purposes Only

355 CDO
Line Finder Control Cct
SD-31022-011

Shropshire

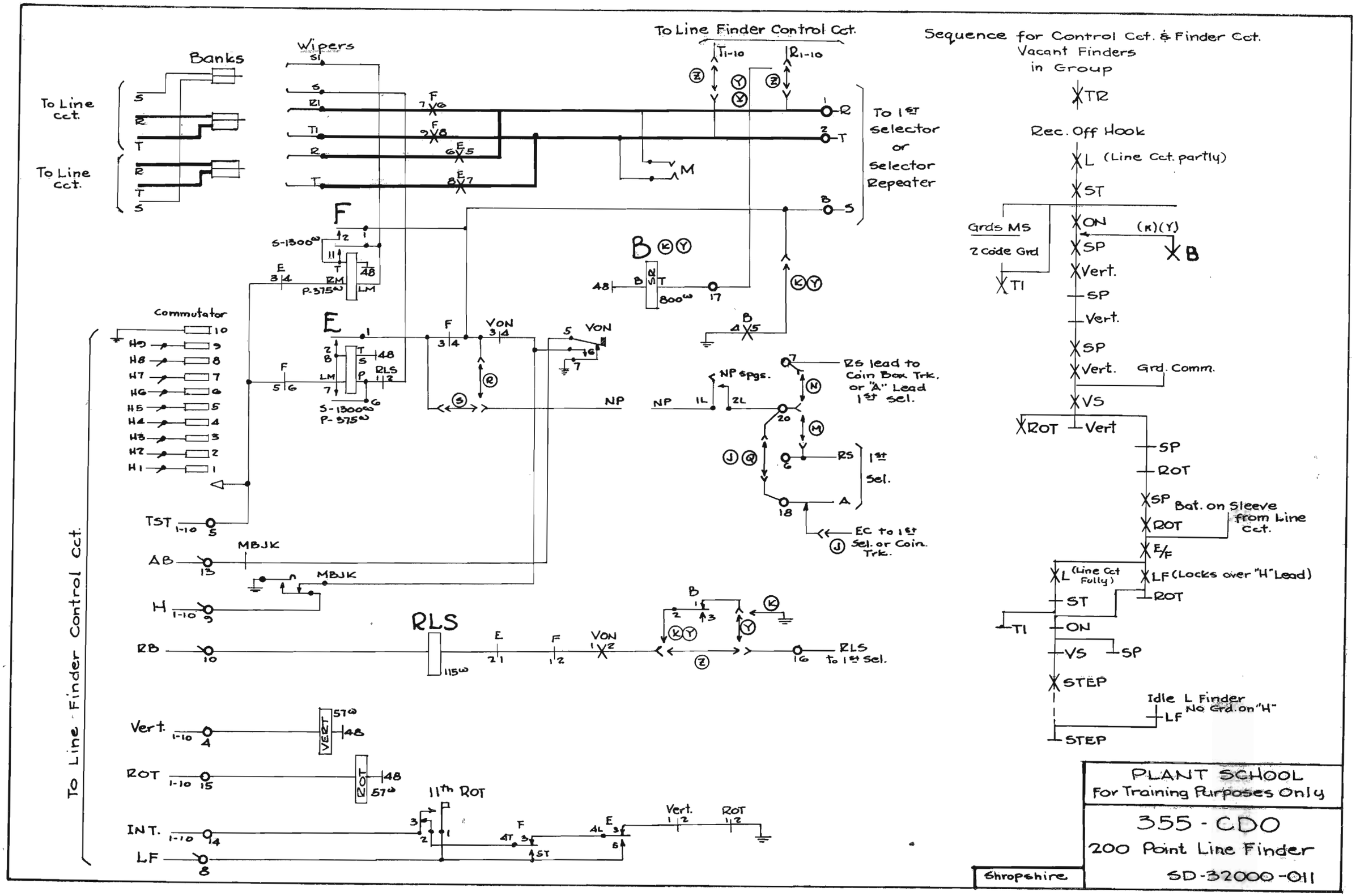
To Line Finder Control Cct.
Banks
To Line cct.
To Line cct.
Wipers
To Line Finder Control Cct.
To 1st Selector or Selector Repeater
Commutator
RLS
RLS lead to Coin Box Trk. or "A" Lead 1st sel.
NP spgs.
EC to 1st Sel. or Coin Trk.
MBJK
11th ROT
Sequence for Control Cct. & Finder Cct.
Vacant Finders in Group
Rec. Off Hook
(Line Cct. partly)
Grds MS
2 Code Grd
Grd. Comm.
Bat. on Sleeve from Line Cct.
(Line Cct Fully)
LF (Locks over "H" Lead)
Idle L Finder No Grd. on "H"
PLANT SCHOOL
For Training Purposes Only
355 - CDO
200 Point Line Finder
SD-32000-011
Shropshire

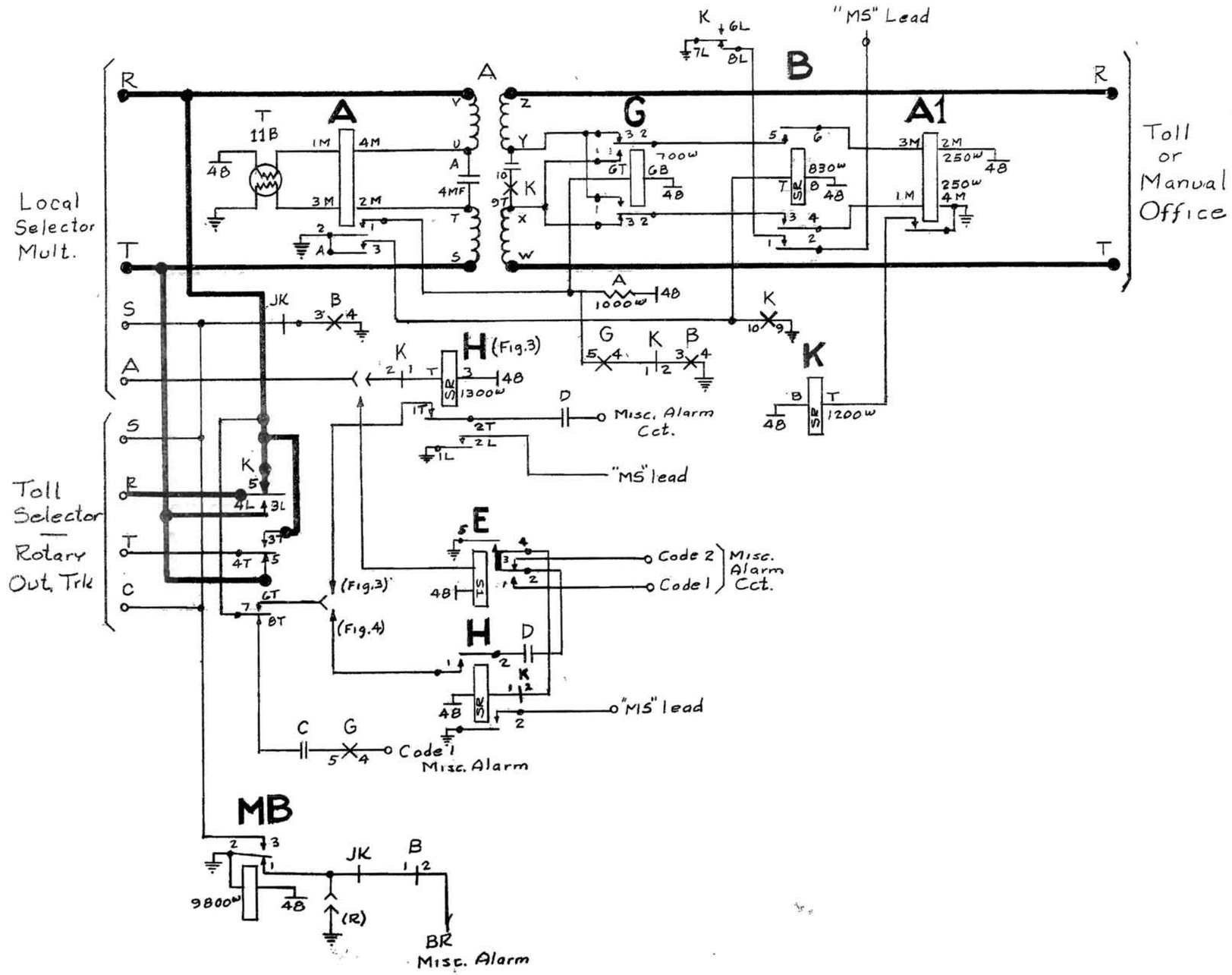

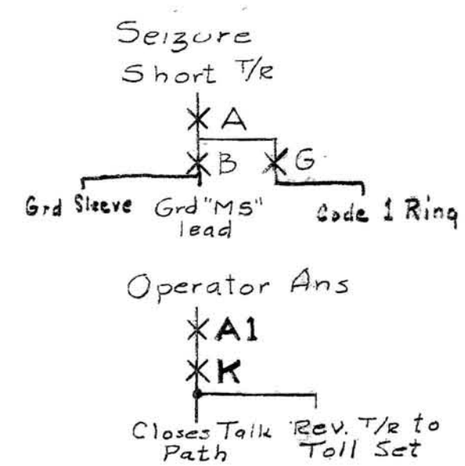

Plant School
Training Purposes Only

355 C.D.O.
Outgoing Trunk to Manual or Toll
SD 31925-011

C.E. SHROPSHIRE

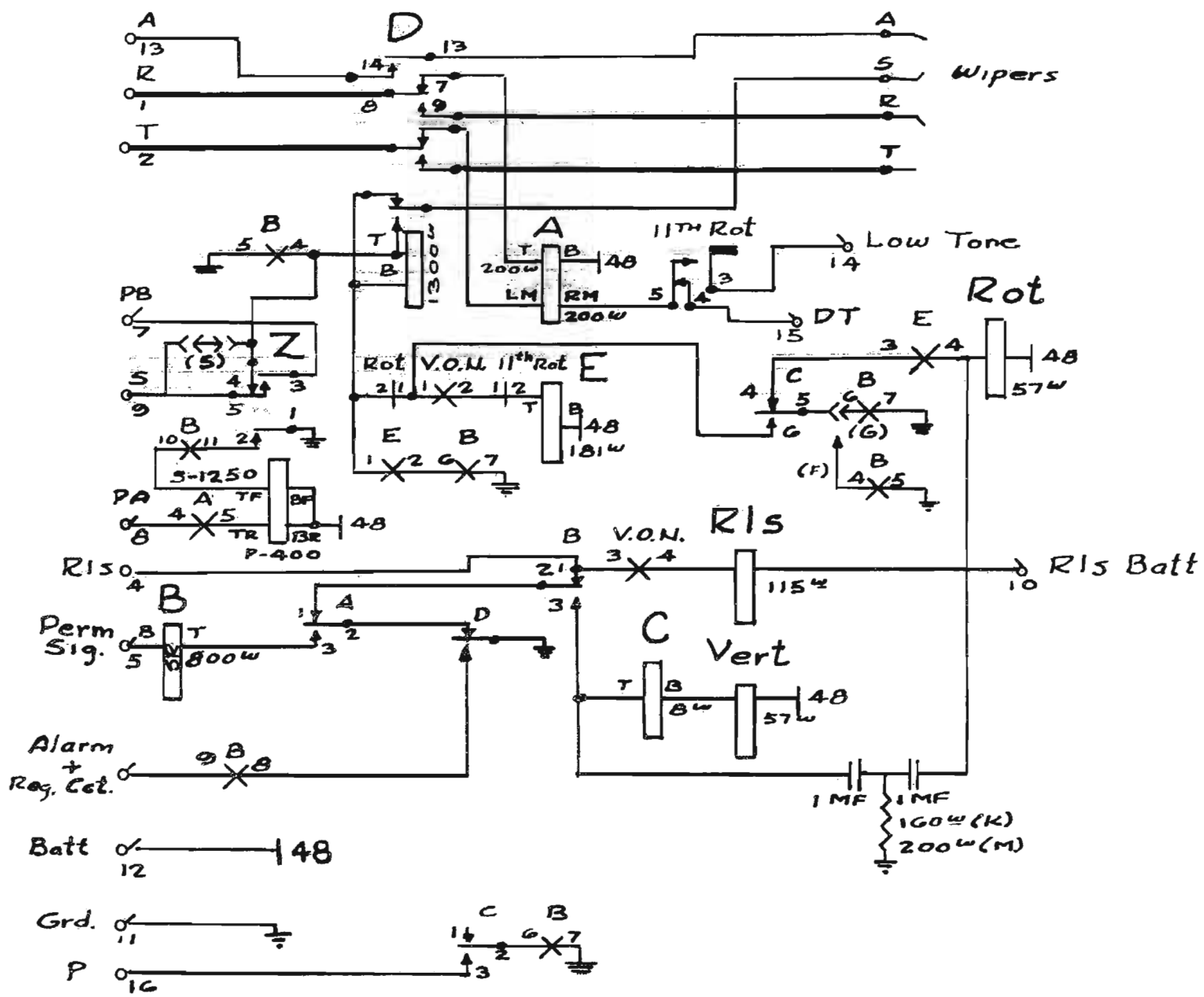

Seizure
Short T/R

A
B
Grd. Sleeve

Pulsing

A
Vert.
C
V.O.N.
A
E
Grd "P" Lead when used
Vert.
A
Vert.
A
Vert.
C
Rot
E
Rot
Grd on Sleeve Term.
E
Rot
E
No Grd. on Sleeve
Rot
D
(Locks to Sleeve
A
Closes T/R
Grds Sleeve to "B" relay
B

Release
Grd off Sleeve

D
Rls
V.O.N.
Rls

PLANT SCHOOL
TRAINING PURPOSES ONLY

355 C.D.O.
Selector
SD 319 64-011

C.E. Shropshire

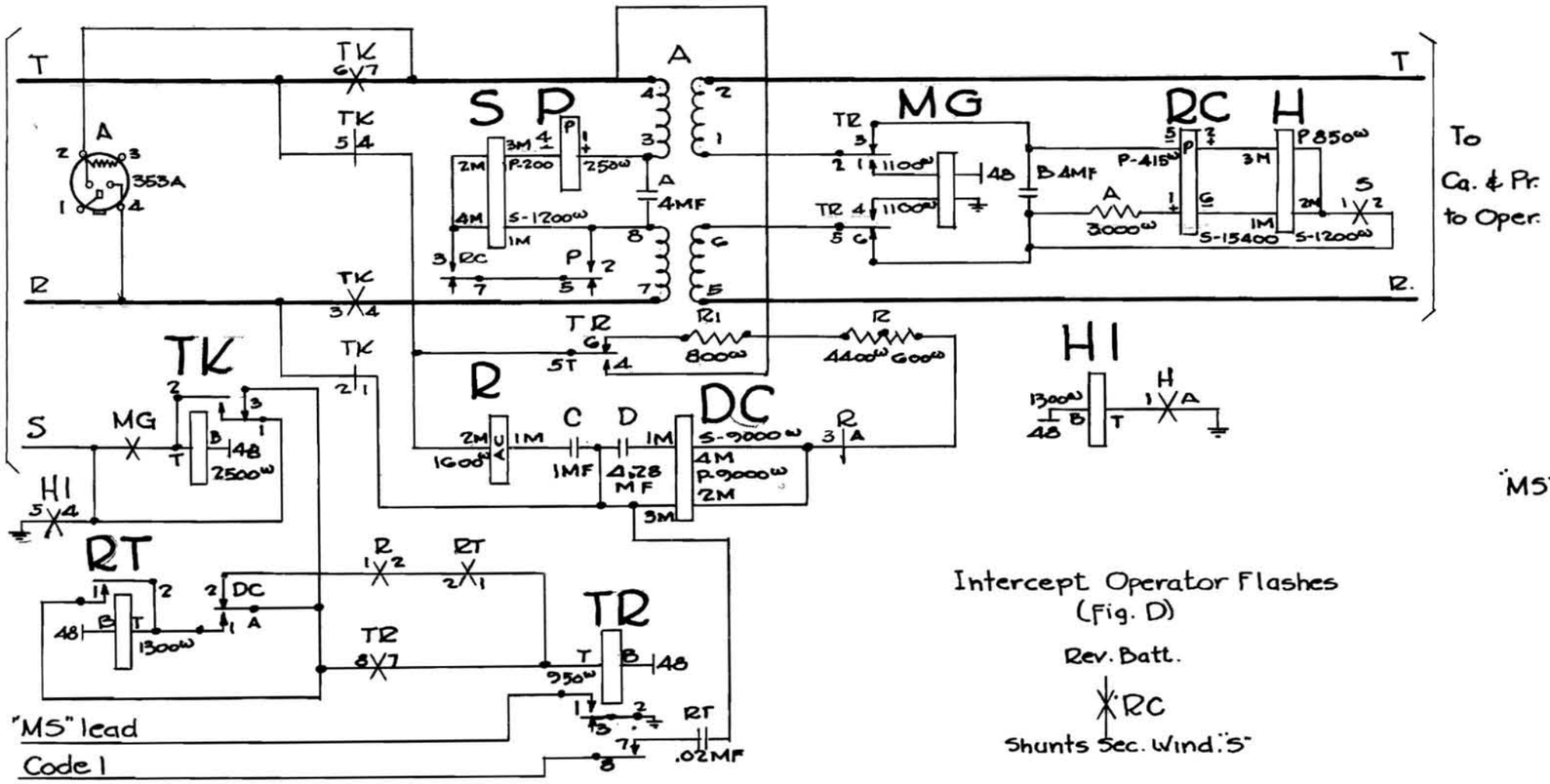

Seizure

Grd. from Conn. Thru Trk. & Trk. Finder Cct.

Ring Period — R

Silent Period — R, DC, RT

Ring Period — R, DC, TR (Locks to TK)

R → "MS" Lead; Tube "A" across Line (Ring Trips); Rg. Ind Sub.; Lp inte. Swbrd.

Intercept Operator Flashes (Fig. D)

Rev. Batt.

RC

Shunts Sec. Wind. "S"

Calling Sub. Releases

S

Removes Shunt from Wind "H" Which releases Relay in Cord Cct.

Operator Disc.

H, H1, TK — Grd. off Sleeve

Intercept Operator Ans.

Aiding Bat. from Swbrd

MG, TK (Locks to Sleeve)

Toll Call Only — P — Closes Talk Cct. — TR — S — RT

MG — Completes Talk Path

H — Removes Rg Ind.

H1 — Grds. Sleeve

Assoc. Draw.
Trunk Cct. SD 31337-01
Trunk Finder SD 31793-01

PLANT SCHOOL
For Training Purposes Only

355 CDO
Outgoing Trunk Cct. for Intercept Service
SD 31965-011

C.E. Shropshire

Perm. Sig. Alarm

Grd. from "A" relay thro winding "B" of selector

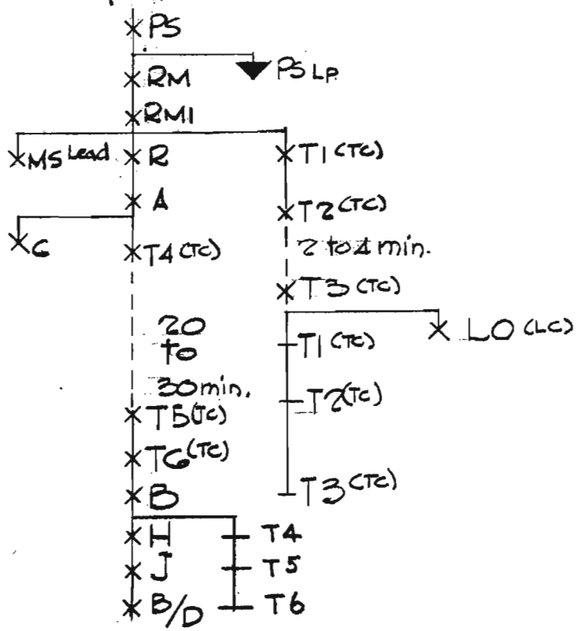

Release Alarm

Grd. through RLS Mag.

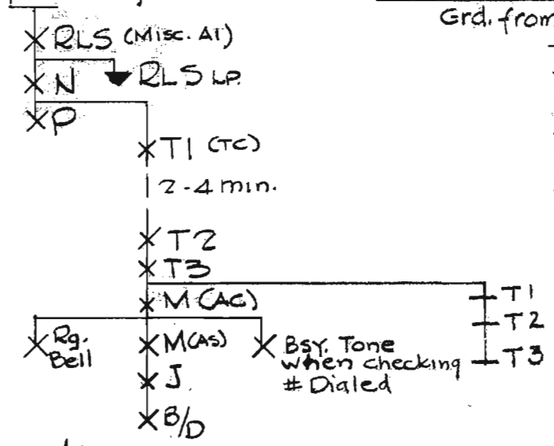

Cable Ins. or Molt. Perm. Sig Alarm.

Grd. from Ca. Ins. Cut.

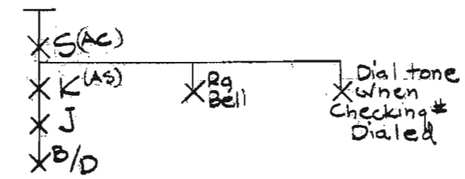

Minor Alarm

Batt. from Blown fuse.

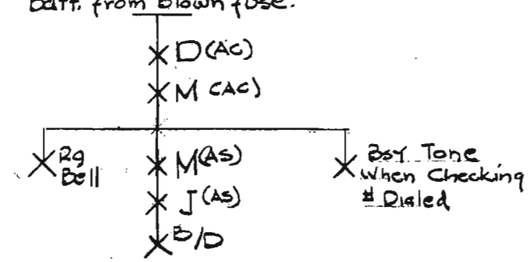

Major Alarm

Grd.

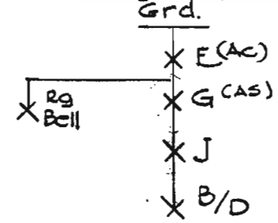

Call Block

Grd.

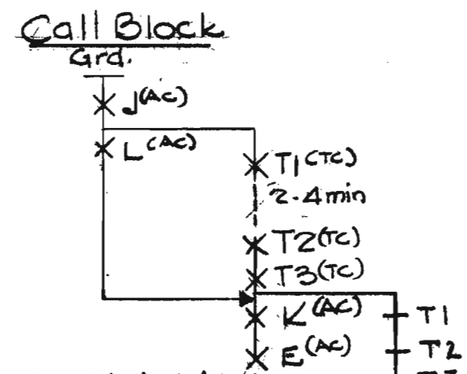

See Major Alarm

Oper. Ans. & Hears Nothing

Grd. on Sleeve of Trk.

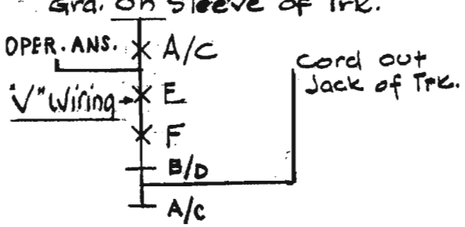

Oper. Ans. & Hears Nothing

Grd. on Sleeve of Trunk.

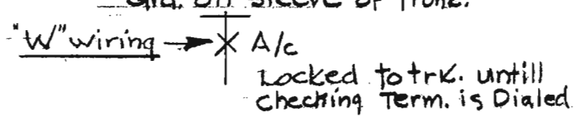

Oper. Dials Test

Grd. on Sleeve.

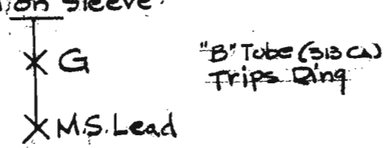

Oper. Hears One Ring

Alarm remains in as Long as RM is operated

Oper. Dials Test

Grd. on Sleeve.

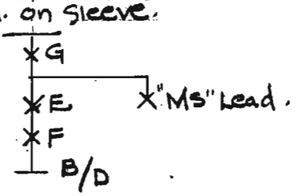

Plant School
For Training Purposes Only

Assoc. Drwg.
S.D. 32643-011
S.D 31844-011

C. Shropshire

Alarm Control & Sender Cct

S.D-31980-011

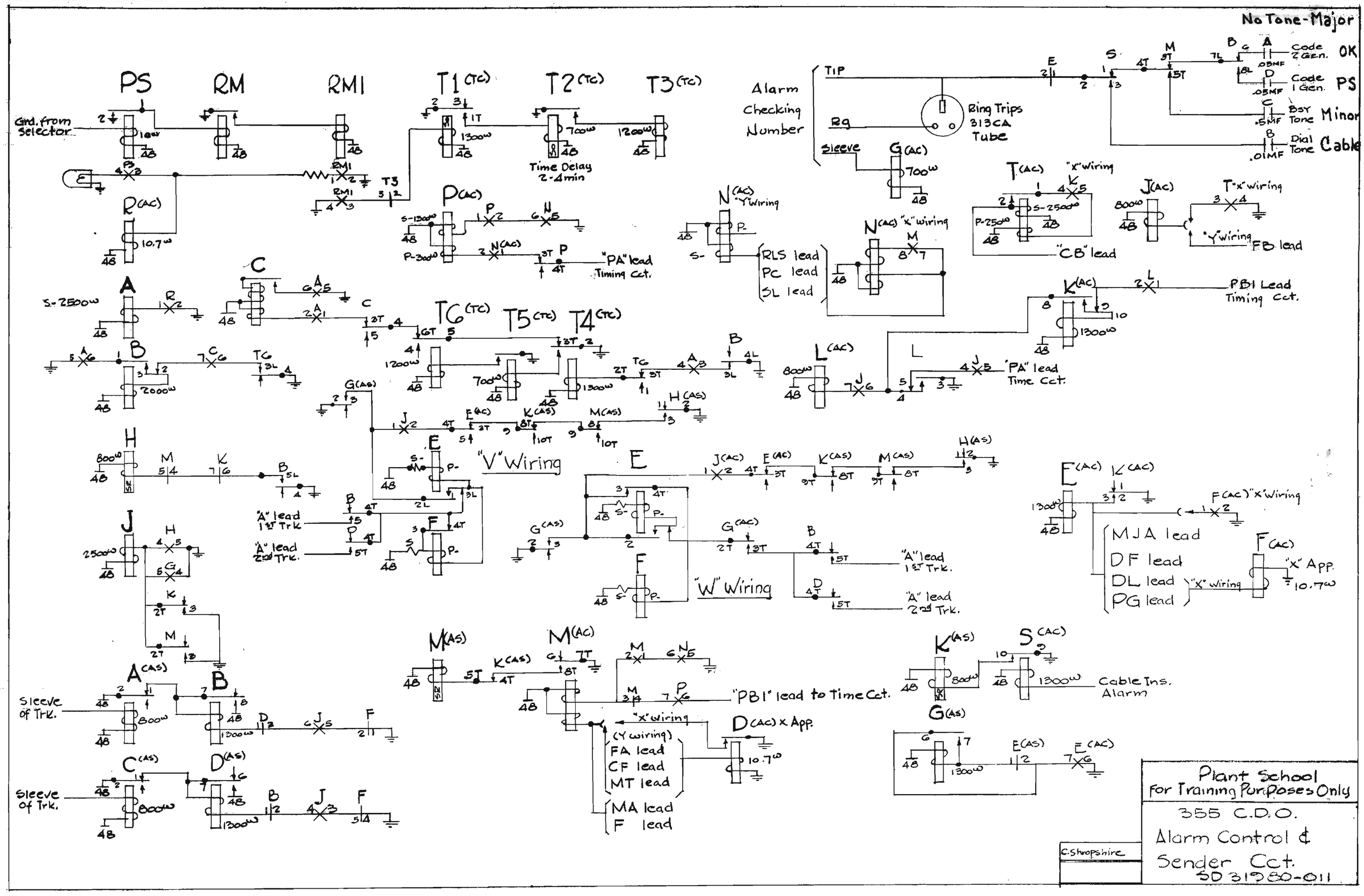
No Tone-Major
PS
RM
RM1
T1 (TC)
T2 (TC)
T3 (TC)
Gnd. from Selector
Time Delay 2-4min
Alarm Checking Number
TIP
Rg
Sleeve
Ring Trips 313CA Tube
Code 2 Gen. OK
Code 1 Gen. PS
Busy Tone Minor
Dial Tone Cable
R (AC)
P (AC)
"PA" lead Timing Cct.
N (AC) "Y" wiring
RLS lead
PC lead
SL lead
N (AC) "X" wiring
T (AC) "X" wiring
"CB" lead
J (AC)
T "X" wiring
"Y" wiring
FB lead
K (AC)
PB1 Lead Timing Cct.
L (AC)
"PA" lead Time Cct.
T6 (TC)
T5 (TC)
T4 (TC)
"V" Wiring
"W" Wiring
"A" lead 1st Trk.
"A" lead 2nd Trk.
F (AC) "X" Wiring
MJA lead
DF lead
DL lead
PG lead
"X" App.
"X" wiring
M (AS)
M (AC)
"PB1" lead to Time Cct.
D (AC) X App.
(Y wiring)
FA lead
CF lead
MT lead
MA lead
F lead
K (AS)
S (AC)
Cable Ins. Alarm
G (AS)
Sleeve of Trk.
Plant School
For Training Purposes Only
355 C.D.O.
Alarm Control & Sender Cct.
SD 31980-011
C. Shropshire

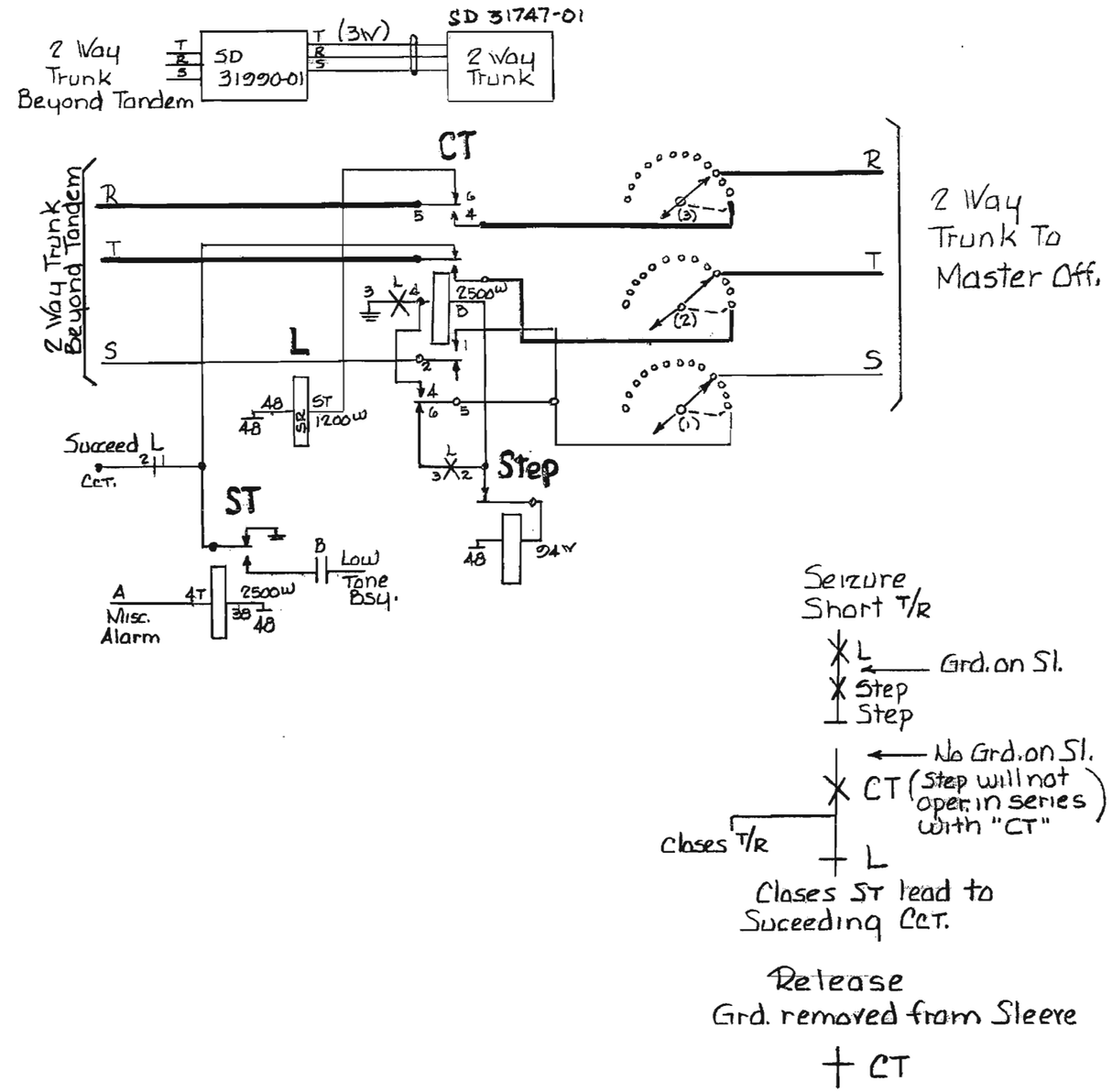

Plant School
Training Purposes Only

355 CDO
Rotary Out Trunk
Switch
SD 31990-01

C.E. Shropshire

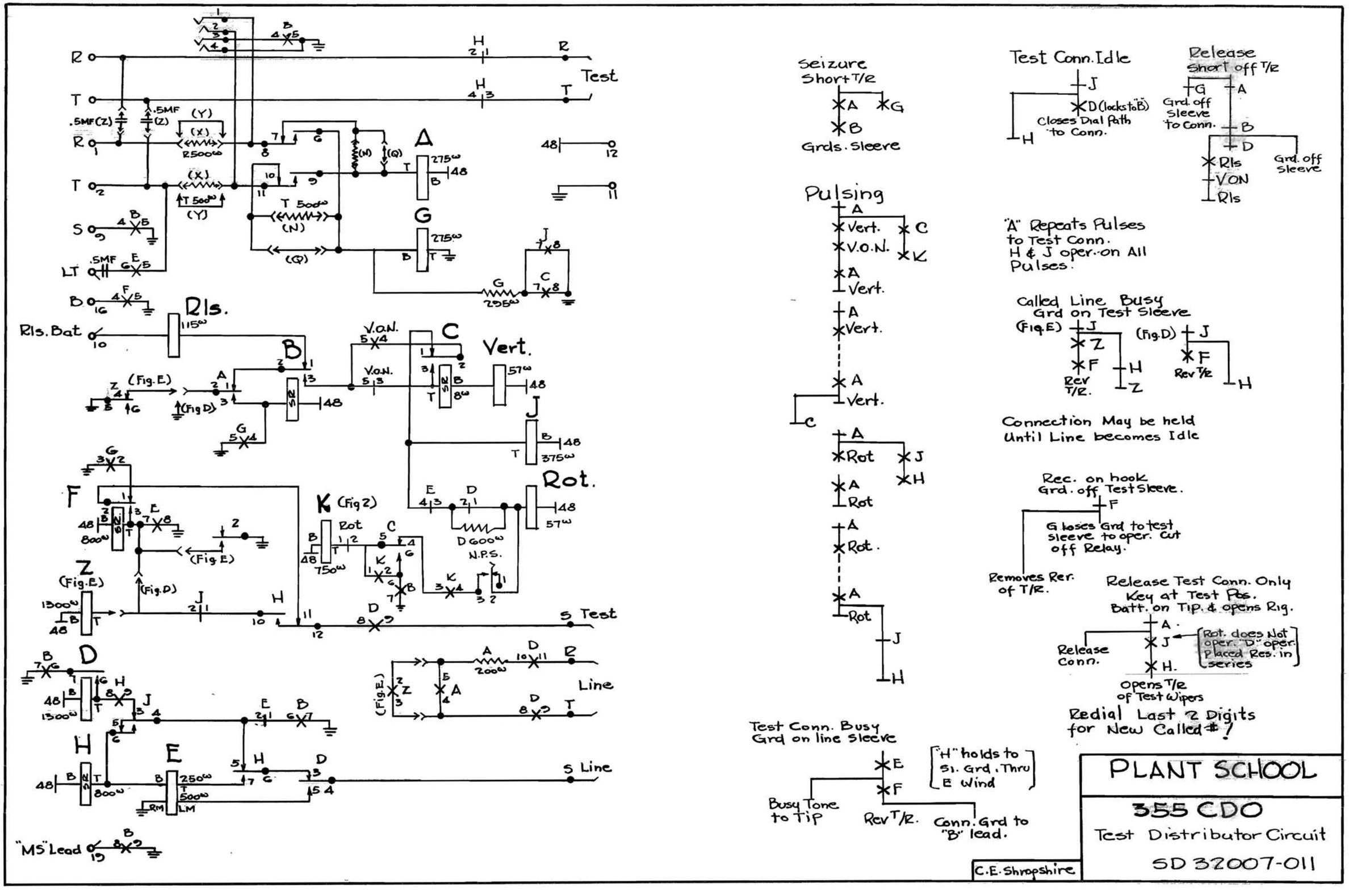
R
T
Test
.5MF(Z)
.5MF (Z)
(Y)
(X)
R500ω
T 500ω
(N)
(Q)
A
275ω
G
S
LT
B
Rls.
Rls. Bat
115ω
V.O.N.
C
Vert.
57ω
(Fig. E.)
(Fig D)
J
Rot.
375ω
57ω
F
800ω
Z
(Fig. E)
K (Fig 2)
Rot
750ω
D 600ω
N.P.S.
S Test
D
1300ω
H
E
250ω
500ω
RM
LM
S Line
200ω
Line
"MS" Lead
Seizure
Short T/R
A
G
B
Grds. Sleeve
Pulsing
Vert.
V.O.N.
C
K
Rot
J
H
Test Conn. Idle
D (locks to "B")
Closes Dial Path to Conn.
Release
Short off T/R
Grd. off Sleeve to Conn.
Rls
VON
Grd. off Sleeve
"A" Repeats Pulses to Test Conn.
H & J oper. on All Pulses.
Called Line Busy
Grd on Test Sleeve
(Fig. E)
(Fig. D)
Rev T/R.
Rev T/R
Connection May be held Until Line becomes Idle
Rec. on hook
Grd. off Test Sleeve.
F
G loses Grd to test sleeve to oper. Cut off Relay.
Removes Rev. of T/R.
Release Test Conn. Only
Key at Test Pos.
Batt. on Tip. & opens Rlg.
Release Conn.
Rot. does Not oper. "D" oper. Placed Res. in series
Opens T/R of Test Wipers
Redial Last 2 Digits for New Called #!
Test Conn. Busy
Grd on line sleeve
"H" holds to S1. Grd. Thru E Wind
Busy Tone to Tip
Rev T/R.
Conn. Grd to "B" lead.
PLANT SCHOOL
355 CDO
Test Distributor Circuit
SD 32007-011
C.E. Shropshire

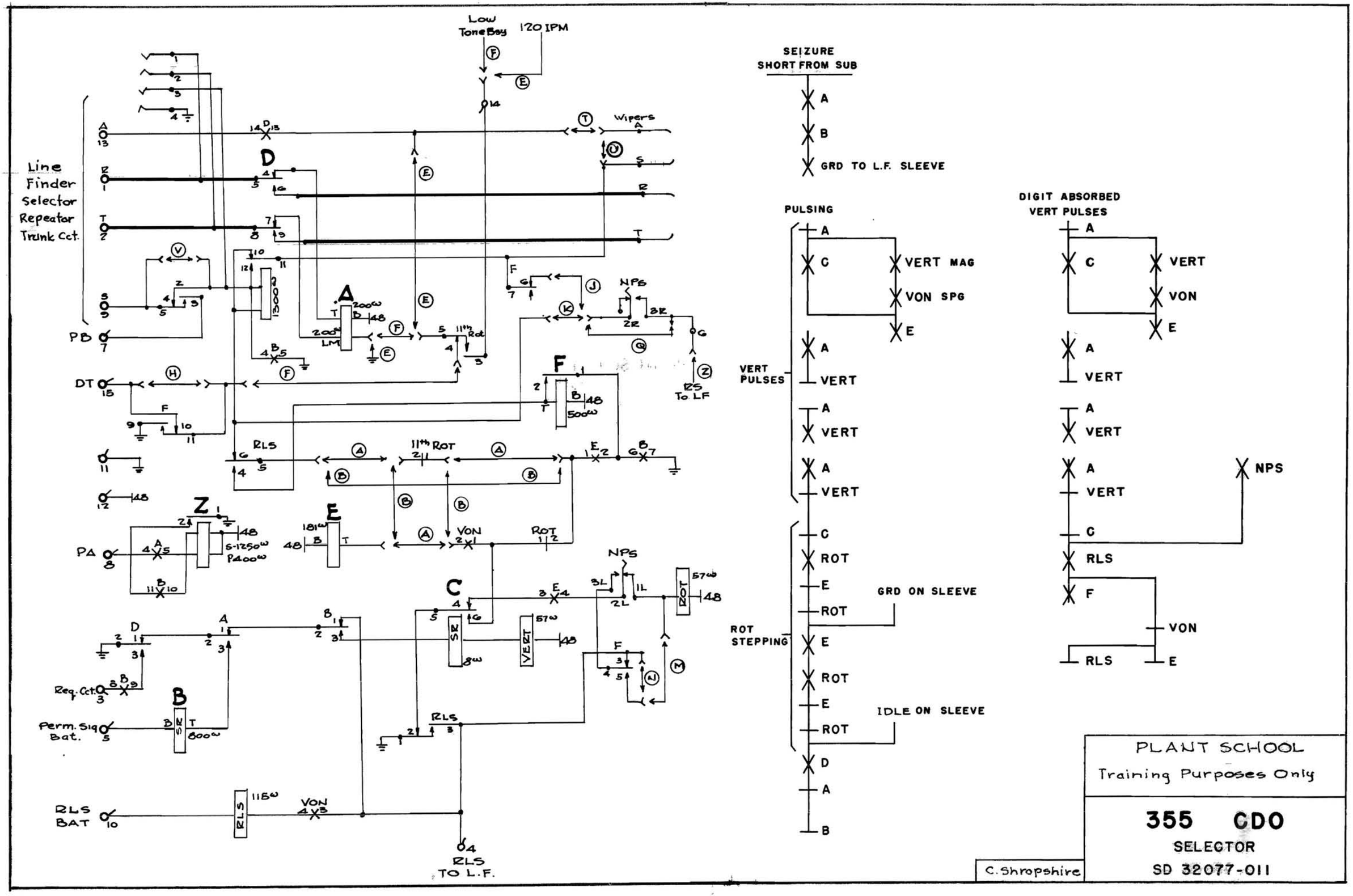
Low Tone Bay
120 IPM
Wipers
Line Finder Selector Repeater Trunk Cct.
PB
DT
PA
Req. Cct.
Perm. Sig Bat.
RLS BAT
RLS TO L.F.
125 To LF
NPS
SEIZURE SHORT FROM SUB
GRD TO L.F. SLEEVE
PULSING
VERT MAG
VON SPG
VERT PULSES
ROT STEPPING
GRD ON SLEEVE
IDLE ON SLEEVE
DIGIT ABSORBED VERT PULSES
VERT
VON
RLS
PLANT SCHOOL
Training Purposes Only
355 CDO
SELECTOR
SD 32077-011
C. Shropshire