CIRCUIT NOTES:

101.

DESIG	AMP	POTENTIAL FUSED	ONE PER
A	1-1/2	48V 3AG	FIG. 1
BATTERY SYMBOL -48			VOLTAGE 45-50V GRND-56V CURRENT DRAIN 100

102. UNLESS OTHERWISE SPECIFIED: ALL RESISTORS ARE KS-13490L1.

103. SWITCH (S) SHOWN AS VIEWED FROM WIRING SIDE.

104. SEE TABLE A FOR CONNECTION OF LOAD CIRCUIT RESISTORS (R25 TO R28) TO PROVIDE TOTAL OUTPUT EQUIVALENT TO ELEVEN LOADS INCLUDING JACK TERMINATED OUTLET. THE NUMBERS 1, 2, 3 & 4 AT RESISTORS (R25 TO R28) ARE NUMBERS EQUIVALENT TO LOAD CIRCUITS PER FIG. 2. WITH LOF ALL STRAPS ARE IN.

105. POTS. (R52, R71, R72, R74, AND R88) ARE INITIALLY ADJUSTED AT THE FACTORY, AND SHOULD BE CHANGED ONLY IN ACCORDANCE WITH INSTRUCTIONS COVERED IN MAINTENANCE BSM.

106. USE "B" OR "H" OPTION AS REQUIRED TO MEET SHOP TEST REQUIREMENTS.

INFORMATION NOTES:

301. UNLESS OTHERWISE SPECIFIED: RESISTANCE VALUES ARE IN OHMS. CAPACITANCE VALUES ARE IN MICROFARADS. THE SYMBOLS + (PLUS) OR - (MINUS) ARE IN VOLTS.

RECORD OF FIGURES, WIRING AND APPARATUS CHANGES						
CHANGES ON ISS.	IF JOB RECORDS DO NOT SPECIFY	THIS OPTION WAS FURN	SEE NOTE	USE IN CIRCUIT STD	AAM	MD
4A	E OR B	A		B		A
4B	E OR F	E		F		E
5A	G	B OR B		G		B
5B	H OR J	H		J		H

302. ON SOME GENERATORS A WARD LEONARD 3.1M RESISTOR, 450 OHMS OR AN OHMITE, 5 WATT AXIAL LEAD RESISTOR 470 OHMS CATALOG NO. 4650, MAY HAVE BEEN SUBSTITUTED FOR THE KS-14601 L1A 464 OHM RESISTOR (R57).

FIG. 101
BLOCK DIAGRAM

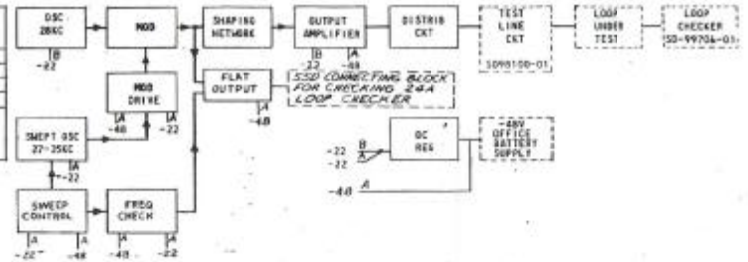

FIG. 1

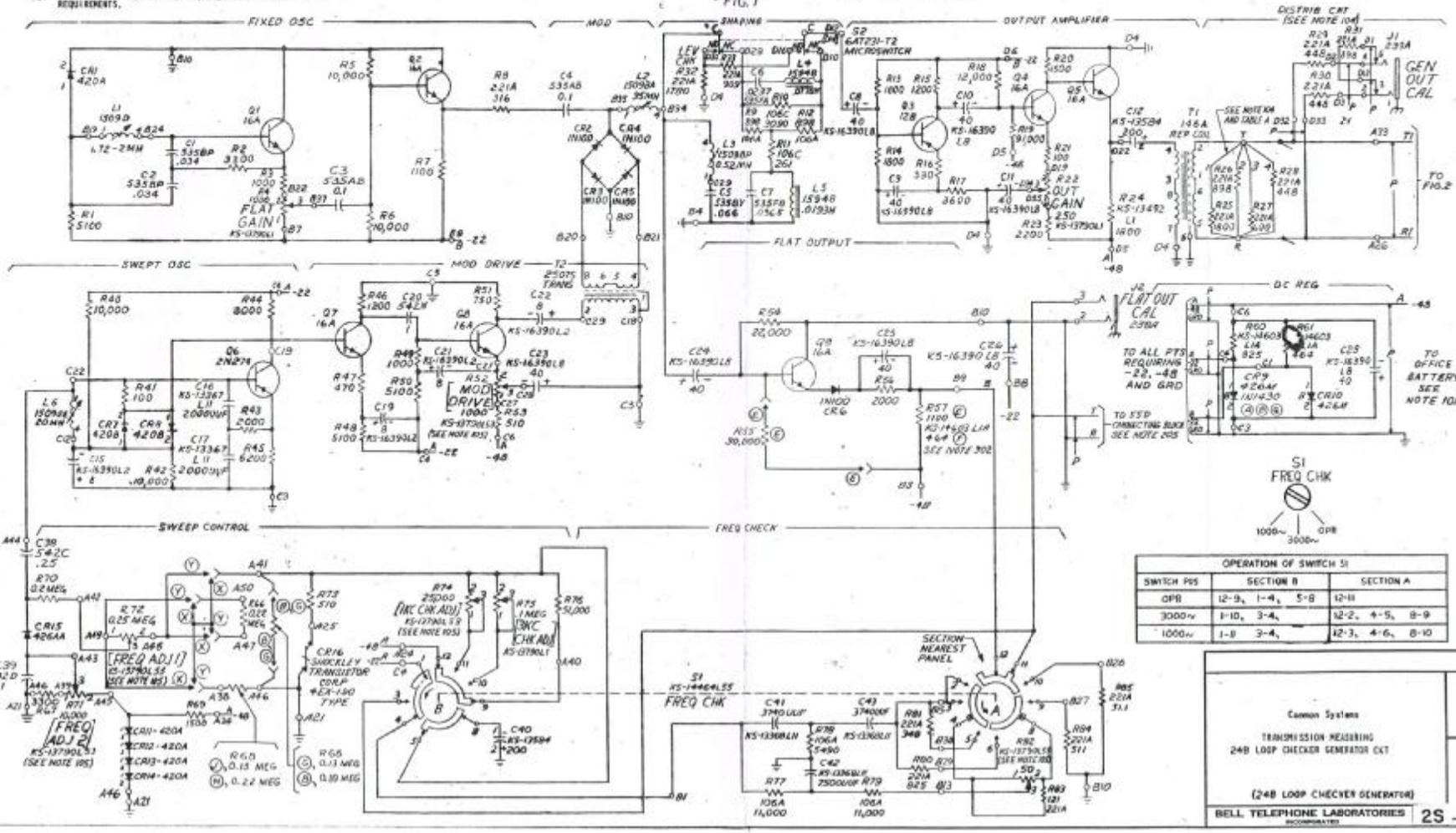

OPERATION OF SWITCH S1		
SWITCH POS	SECTION B	SECTION A
OPB	12-9, 1-4, 5-8	12-11
3000~	1-10, 3-4,	12-2, 4-5, 8-9
1000~	1-8 3-4,	12-3, 4-6, 8-10

1	1	6-20-68	
2A	2A	7-12-68	
3A	3A	7-15-68	
4B	4B	8-1-68	
5B	4B AAF 4B	3-4-68	

1940248-( ) EQUIPMENT INFO

5

Common Systems

TRANSMISSION MEASURING
24B LOOP CHECKER GENERATOR CKT

(24B LOOP CHECKER GENERATOR)

AT & T CO STANDARD

SD-99707-011
2 SHEETS

BELL TELEPHONE LABORATORIES INCORPORATED

2S

6

EQUIPMENT NOTES:

201. WIRING TERMINAL NUMBERS ARE DESIGNATIONS ON CARD A, B, C AND D AS INDICATED ON CAD 1.

202.

203. EQUIP AND WIRE FIRST TO TENTH OUTPUT CIRCUITS IN SEQUENCE TO FIRST 90 TENTH FIG. 2.

204. [ ] INDICATES DESIGNATIONS SHOWN FOR INFORMATION ONLY AND ARE NOT TO BE STAMPED.

205. ONE 550 CONNECTING BLOCK PER OFFICE AS REQUIRED FOR ACCESSIBILITY OF GENERATOR TONE FOR CALIBRATING THE 20A LOOP CHECKER. IT SHALL BE LOCATED APPROXIMATELY 5 FT. FROM FLOOR ON SAME BAY AS GENERATOR AND WIRED TO GENERATOR WITH 22GA PAIRED WIRES.

DRAWING ISSUE	
1	
2A	
3A	
4B	
5B	

POWER IS RS-145 55 A2 PLUG PINS

1-35 PINS

CAD 1
FOR SD-99707-01
FIG. 1 & FIG. 2

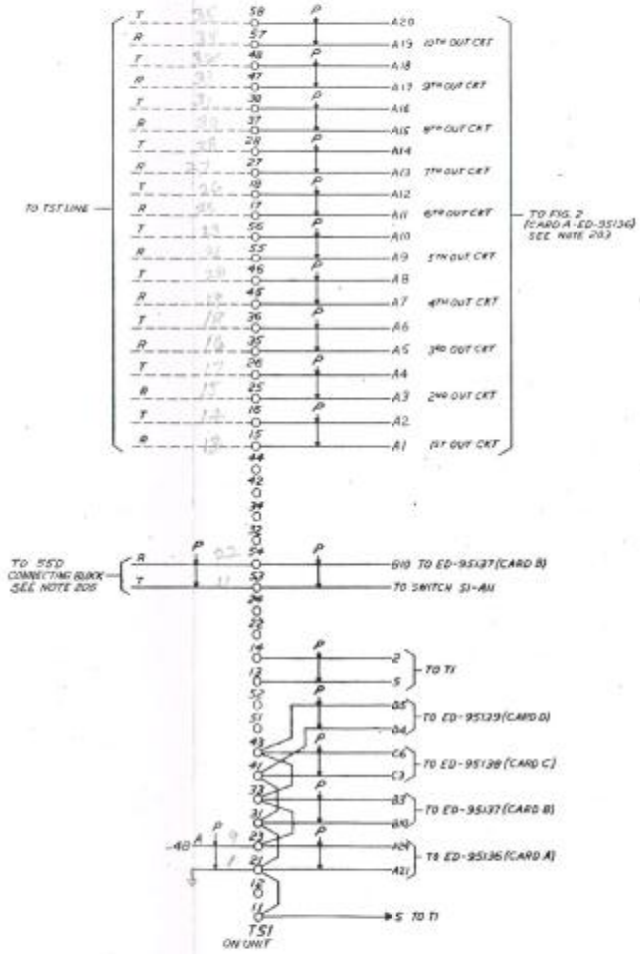

FIG. 2

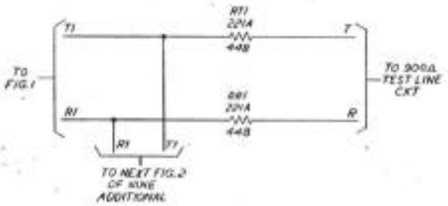

TABLE A
WIRING OF LOAD CIRCUIT RESISTORS ON TERMINAL BOARD MOUNTED ON T1 (146A REF GDL)
SEE NOTE 104

NO. OF FIGS. 2 IN SERVICE	STRAPS TO TERMINAL T			
	R25(1)	R26(2)	R27(3)	R28(4)
ONE	OUT	IN	IN	IN
TWO	IN	OUT	IN	IN
THREE	OUT	OUT	IN	IN
FOUR	OUT	IN	OUT	IN
FIVE	OUT	IN	IN	OUT
SIX	IN	OUT	IN	OUT
SEVEN	OUT	OUT	IN	OUT
EIGHT	OUT	IN	OUT	OUT
NINE	IN	OUT	OUT	OUT
TEN	OUT	OUT	OUT	OUT

S2
6AT2 S1-T2
MICROSWITCH

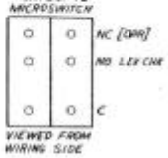

1,2,3 = 5mA
9,10 = 45V 0.5A

5

TRANSMISSION MEASURING
LOOP CHECKER GENERATOR CKT

SD-99707-012

BELL TELEPHONE LABORATORIES INCORPORATED 2S