ITECS

I-2110

TECHNICAL INFORMATION

FOR

EMS-1
LINE MODULE
800010

Approved: R.A. Weitt

Issue 1 9/28/79
Issue 2 1/21/80
Issue 3 6/4/80
Issue 4 9/22/81
Issue 5 1/24/83
Issue 6 10/16/85
Issue 6A 1/6/86

TCI Library www.telephonecollectors.info

TCI Library www.telephonecollectors.info

Issue 6 of I-2110 Line Module Technical Information applies to equipment with the following or later KS issues.

500161	Backplane	KS 13	600111	Line CCT	KS 13
500162	Backplane	KS 12	600115	Allotter	KS 20
600100	Matrix	KS 21	600116	Finder	KS 19
600110	Line CCT	KS 23	600118	Test Card	KS 5

KS issues can advance without reissue of this instruction when basic data is not affected. The KS issue number often changes for reasons that do not affect the circuit or its operation.

Issue 1 of I-2110 applies to all previous EMS-1 Selector equipment. Issue 2 is replaced by issue 3 for document correction only.

Issue 4 provides additional information and updated drawings.

Issue 5 provides updated drawings.

Issue 6 provides additional Installer wiring information. Added adjustment procedure for line circuit off-hook loop detection.

TCI Library www.telephonecollectors.info

TCI Library www.telephonecollectors.info

EMS-1

LINE AND LINEFINDER MODULE

TABLE OF CONTENTS

TCI Library www.telephonecollectors.info

DRAWINGS		PAGE
MA500191	Linefinder Monitor	5-1
A600100	Relay Matrix Card	5-2
MA600110-01	Line Circuit with Lockout and Optional Revertive Call	5-3
MA600111	Line Circuit (Non-Lockout)	5-4
MA600115	Linefinder Allotter	5-5
MA600116	Linefinder	5-6
C500161	Backplane for Linefinder	5-7
C500162	Line Circuit Backplane	5-8
C500191	Linefinder Monitor	5-9
C600100	Relay Matrix Card	5-10
C600110	Line Circuit with Lockout and Optional Revertive Call	5-11
C600111	Line Circuit (Non-Lockout)	5-13
C600115	Linefinder Allotter	5-15
C600116	Linefinder	5-17
C600118	Test Line Access	5-18

TCI Library www.telephonecollectors.info

EMS-1

LINE AND LINEFINDER MODULE

1.0 DESCRIPTION

The EMS-1 Line and Linefinder Equipment may be used for Non-Lockout, Lockout with Revertive Call applications in existing Step-by-Step and XY Sytems. This module can be added individually to your present system or in combination with other EMS-1 Modules. It may also be used with EMS-1 Selectors and Connectors as a complete Switching System.

Major components of the EMS-1 Line and Linefinder Equipment consist of the Line Card (with 8 Lines per Card), the Linefinder Card, the Allotter Card, the Line Test Card, and the Matrix Card.

The Lines and Linefinders with the associated Matrix Card(s) provide up to 96 Lines per Line/Linefinder Module.

1.1 STANDARD FEATURES

STANDARD FEATURES include but are not limited to: • The Line Circuit features Lockout • Lockout with Revertive Call • Non-Lockout • 8 Lines per Card • Ground Start strappable per Line • One Class Mark per Module strappable in increments of 8 Lines • LED display on faceplate indicating Line Busy • Lockout • Finder Request • Fuse Alarm • Permanent Signal.

The Linefinder features Level Restriction • Out of Service Switch • compatible with Common Mode Line Treatment Equipment • LED display on faceplate indicating next to be used • Busy • Fuse Alarm.

The Allotter Circuit features a digital readout indicating Line to Linefinder connection for testing • Meter Outputs for Peg Count • All Finders Busy (AFB) • Overflow • Delayed Call (Call Blocked) Output • faceplate LED display indicating All Finders Busy • Major Alarm • Minor Alarm • Fuse Alarm.

The Line Test Circuit features a line Jack and A&B Jack to facilitate testing.

Connectorized Module for ease of installation.

1.2 OPTIONAL FEATURES

Tone Dialing is provided as a plug-on option to the Linefinder Circuit. It may be equipped initially or added later as required.

TCI Library www.telephonecollectors.info

1.3 SPECIFICATIONS

GENERAL

Supply Voltage	44-56 VDC	Temp. Range - (Room Ambient)	+10° to +120 F

Supply Current	Idle	Busy
Allotter	20ma	36ma
Finder	20ma	80ma
Line Card, LO	32ma	125ma Nominal
Line Card, NLO	20ma	100ma Nominal

Humidity Maximum - (non-condensing) 20 to 90%

Surge Voltage Protection 1500V

Subscriber Loop 1900 ohm

TRANSMISSION

Insertion Loss -	15dB max.	Echo Return Loss -	25dB min.
Crosstalk Loss -	96dB min.	Sing Return Loss -	15dB min.
Long Balance - (1 HZ at 0dB)	70dB min.		

Note: All transmission specifications are for talking mode.

MECHANICAL

Finder Card Wt.	.8 lbs.	Matrix Card Wt. -	11 lbs.
Allotter Wt. -	1.1 lbs.	Module Wt. - (3 Cages & Cables)	22 lbs.
Test Card Wt. -	.5 lbs.	Module Height -	24.5 in.
Line Card Wt.			
Non Lockout -	1.8 lbs.	Module Depth -	12.8 in.
Lockout Non R/C -	2.5 lbs.		
Lockout R/C -	5.2 lbs.		

Note: Specifications subject to change without notice.

1.4 CUSTOMER SERVICE ASSISTANCE

Technical assistance is available from the ITEC Customer Service Department in Huntsville, Alabama telephone 205-881-1613.

Please obtain a return material authorization number (RMA) from the Customer Service Department (205-881-1613) prior to returning the equipment to the factory for repair or other reasons.

The following information should be included with the shipment:

1. RMA Number
2. Return shipping address
3. Contact name and telephone number
4. Specific failure or trouble encountered

TCI Library www.telephonecollectors.info

Ship prepaid via UPS to

ITEC, Inc.
520 Green Cove Rd.
Huntsville, Alabama 35803

or mail via insured Parcel Post to:

ITEC, Inc.
P. O. Box 4147
Huntsville, Alabama 35802

Adherence to this procedure will facilitate prompt repair and return of your equipment.

TCI Library www.telephonecollectors.info

EMS-1
LINES/LINEFINDERS

ORDERING INFORMATION			
#1 Line and Linefinder Module 800010			
#2 Linefinders	**#4 Line Circuits/Matrix Cards**		
—1, 1 ea. 600116 Finder	—21, 8 Lines NLO,	1 ea. 600111,	1 ea. 600100
—2, 2 ea. 600116 Finder	—22, 32 Lines NLO,	4 ea. 600111,	1 ea. 600100
—3, 3 ea. 600116 Finder	—23, 40 Lines NLO,	5 ea. 600111,	2 ea. 600100
—4, 4 ea. 600116 Finder	—24, 64 Lines NLO,	8 ea. 600111,	2 ea. 600100
—5, 5 ea. 600116 Finder	—25, 72 Lines NLO,	9 ea. 600111,	3 ea. 600100
—6, 6 ea. 600116 Finder	—26, 96 Lines NLO,	12 ea. 600111,	3 ea. 600100
—7, 7 ea. 600116 Finder	—31, 8 Lines LO ,	1 ea. 600110,1	1 ea. 600100
—8, 8 ea. 600116 Finder	—32, 32 Lines LO ,	4 ea. 600110-1	1 ea. 600100
—9, 9 ea. 600116 Finder	—33, 40 Lines LO ,	5 ea. 600110-1	2 ea. 600100
—10, 10 ea. 600116 Finder	—34, 64 Lines LO ,	8 ea. 600110-1	2 ea. 600100
	—35, 72 Lines LO ,	9 ea. 600110-1	3 ea. 600100
	—36, 96 Lines LO ,	12 ea. 600110-1	3 ea. 600100
#3 Options	—41, 8 Lines LORC,	1 ea. 600110-2	1 ea. 600100
	—42, 32 Lines LORC,	4 ea. 600110-2	1 ea. 600100
	—43, 40 Lines LORC,	5 ea. 600110-2	2 ea. 600100
—15, 1 ea. 500190 Tone Dialing	—44, 64 Lines LORC,	8 ea. 600110-2	2 ea. 600100
	—45, 72 Lines LORC,	9 ea. 600110-2	3 ea. 600100
	—46, 96 Lines LORC,	12 ea. 600110-2	3 ea. 600100

NOTES

#1 BASIC MODULE — The Line and Linefinder Module, #800010, consists of one Line Cage with Backplane #500044-32, one Linefinder Cage with Backplane #500033-22, one Matrix Card Cage #500045-3, one Allotter Circuit #600115, and one Linefinder Test Card #600118.

The Basic Module will accommodate a maximum of 96 Lines, 10 Linefinders, and three Matrix Cards.

#2 QUANTITY OF LINEFINDERS — Order by dash number the quantity of Finders required.

#3 OPTIONS — Order dash number 15 when Tone Dialing is required. (Provided with each linefinder ordered).

#4 QUANTITY OF LINE CIRCUITS — Order quantity of lines by dash number for type (NLO, LO, LORC) required. Two cables, #652004 (Matrix to Lines) are provided for each matrix card equipped. For applications when revertive calls go into Lockout and have transmission battery provided from the line circuit, LORC Lines -42 thru -46 must be used.

NOTE: Order Terminal Blocks and Connectorized Cables as required, see page 18 listings.

EXAMPLE

Note Number	#1	#2	#3	#4
Basic Module and Dash Number	800010	—10	—15	—26

TCI Library www.telephonecollectors.info

CABLES

LINE AND LINEFINDER

ORDERING INFORMATION	
Female Connector One End (Tinned)	**Female Connectors Both Ends**
651025, 1 ea. 25 Feet, 25 Pair	652025, 1 ea. 25 Feet, 25 Pair
651050, 1 ea. 50 Feet, 25 Pair	652050, 1 ea. 50 Feet, 25 Pair
651075, 1 ea. 75 Feet, 25 Pair	652075, 1 ea. 75 Feet, 25 Pair
651100, 1 ea. 100 Feet, 25 Pair	652100, 1 ea. 100 Feet, 25 Pair
651125, 1 ea. 125 Feet, 25 Pair	652125, 1 ea. 125 Feet, 25 Pair
651150, 1 ea. 150 Feet, 25 Pair	652150, 1 ea. 150 Feet, 25 Pair
651200, 1 ea. 200 Feet, 25 Pair	652200, 1 ea. 200 Feet, 25 Pair

NOTES

LINES — Order two Cables for each Matrix Card equipped in the Module. Order length as required for Lines to MDF (T, R, S).

FINDER — Order one Cable per #800010 or 800012 Module, length as required for Linefinders to IDF (T, R, S, LR).

LINES AND LINEFINDER CABLES — Order Cables for Modules #800010 or 800012 from the above chart. Note that one group has connectors on both ends and one group has connectors on one end. The group with connectors on one end has Tinned Wire for wrapping on Terminal Block.

TERMINAL BLOCKS

LINES AND LINEFINDER

ORDERING INFORMATION	
#1 Lines MDF	**#2 Linefinder IDF**
100243, 1 ea. 6 × 26 Wire Wrap	100241, 1 ea. 8 × 26 Wire Wrap
100242, 1 ea. 6 × 24 Connectorized	100240, 1 ea. 8 × 25 Connectorized

NOTES

#1 LINES — Order two Blocks (Wire Wrap or Connectorized) per #800010 Module.

#2 LINEFINDERS — Order IDF Blocks as required. Each Block will accommodate 5 Modules (50 Linefinders T,R,S,LR).

#3 Terminal Blocks specified above are adjustable for 7, 7.5, or 8-inch mounting.

TCI Library www.telephonecollectors.info

TCI Library www.telephonecollectors.info

2.0 ENGINEERING & INSTALLATION NOTES

2.1 APPLICATIONS OF EMS-1 LINE EQUIPMENT

EMS-1 Line equipment can be added to SXS or XY equipment or be used in new installations. EMS-1 Linefinders can be cross connected to electromechanical selectors or EMS-1 Selectors.

2.2 MOUNTING OF MODULES

All EMS-1 equipment is mounted in 23" relay racks. A complete line module requires 24.5 inches of rack space.

Relay racks for line modules use cable standoffs or to cableduct to support installers cable.

See page 6 of this booklet for Typical Shelf Mounting arrangements.

Refer to ordering information on page for additional information.

Shelf Layout

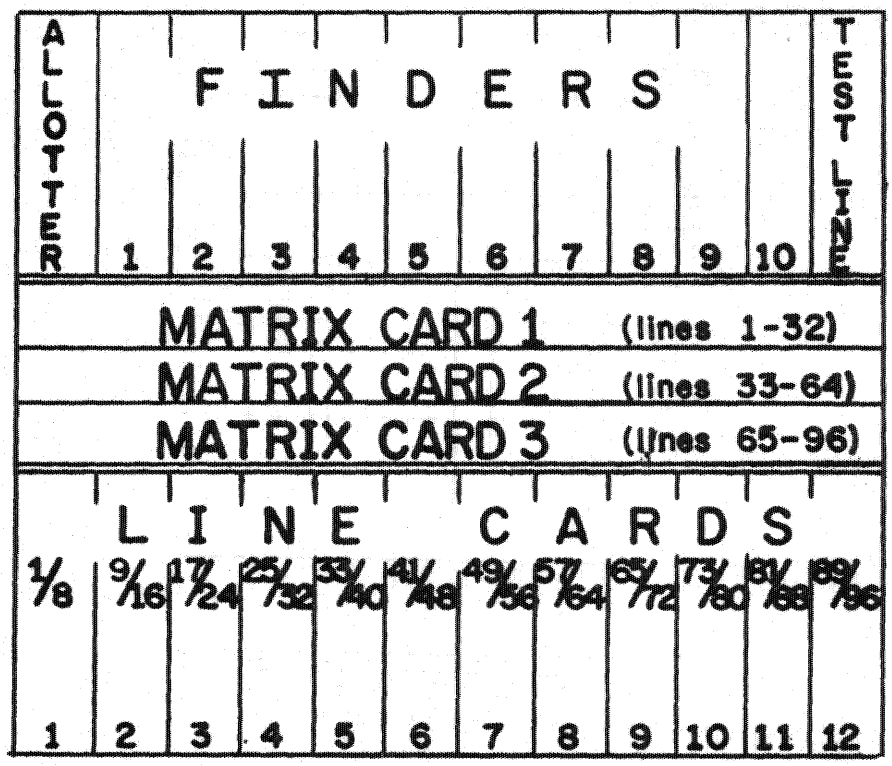

TCI Library www.telephonecollectors.info

FIGURE 1

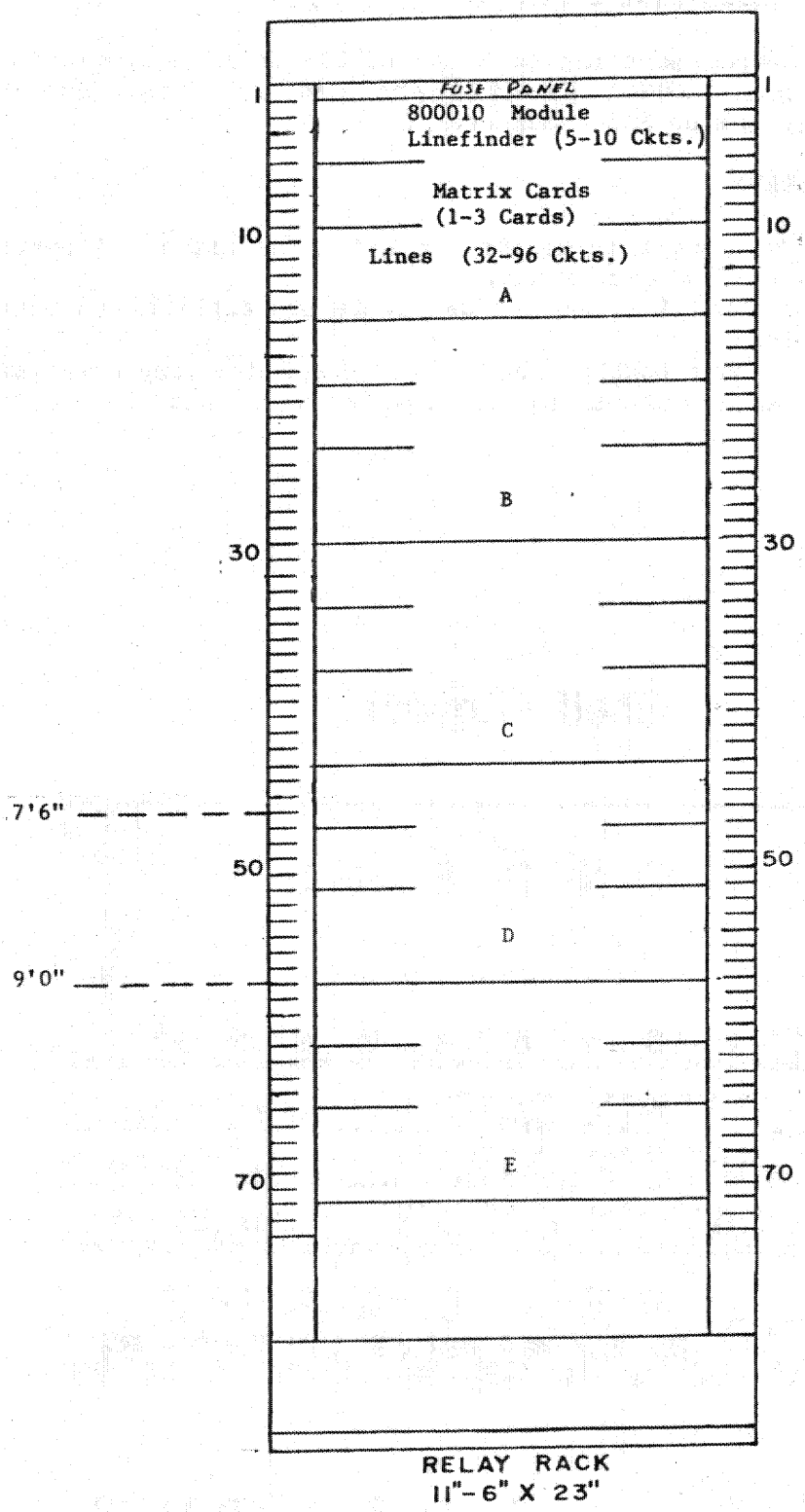

TCI Library www.telephonecollectors.info

2.3 CABLING & WIRING - Refer to sketches A & B for additional information.

A. POWER WIRING & FUSING

Each line and finder cage must be fused by a single 5 amp fuse on a bay fuse panel. Each circuit has individual fuse(s) on the unit.

The installer shall use 20 gauge wire (paired if available) for battery and ground from the bay fuse panel to each backplane. If the proper wire wrap bit is not available the power connections must be soldered.

It is recommended that EMS-1 equipment be powered with filtered battery when it is installed as an addition to Step or XY equipment. One row filter of the appropriate size can be used if all EMS-1 can be powered from the same feeder cable,otherwise, bay filtering similar to Step or XY connector & trunk bays should be provided. A Filtered Fuse Panel (600149) is available from ITEC.

B. ALARMS

Fuse Alarms should be wired to the bay fuse alarm in a manner that will cause the bay lamp to light and to activate the office major alarm. Allotter & PS alarms shall be wired to the fuse panel for bay lamp indications.

A blown fuse on a circuit card will provide a 500 ohm battery on the FA pin. If the 500 ohm resistance is not needed, strap across the resistor on the backplane. Alarms to be wired from the Finder Backplane other than the fuse alarm are: (Wire to bay fuse panel and office suppervisory circuits).

Major Alarm	- Provides a ground output (120 ohm) when the allotter cannot serve a request in approximately 50 seconds even though all finders are not busy.
Minor Alarm	- Provides a ground output (120 ohm) when the allotter has selected a finder but cannot establish a connection in approximately 1 second.
Del. Per Sig.	- Provides ground output (120 ohm) in systems equipped with Lockout Lines if a line has been in lockout condition for 30 minutes.
Perm Sig.	- Provides a ground output (120 ohm) in systems equipped with Lockout Lines immediately after a line goes into lockout condition.

C. A & B TEST JACKS

The A & B test jacks can be wired through the office as required. In new installations it is recommended that both A & B be multipled throughout the office.

The "B" jack can be attached to the finder test line in any line shelf by operating the toggle switch on the appropriate finder shelf test card.

TCI Library www.telephonecollectors.info

D. METER LEADS

The Meter outputs provided are:

Req. Peg	-	A ground pulse (50 or 150 ms. as strapped) appears each time a call is attempted, even if all finders are busy.
ATB Peg	-	A ground pulse (50 or 150 ms. as strapped) appears each time all finders become busy.
Total Peg Count (PC)	-	A ground pulse (50 or 150 ms. as strapped) appears each time a line is attached to a finder.
Del. Call Peg (OF)	-	A ground pulse (same length as Req. Peg) appears each time a line makes a request while all finders are busy. (Overlapping requests create only one Peg.)
Del. Call	-	A ground output (not pulsed) for the duration of time that a request for service is present and all finders are busy.

NOTE: The installer shall cable with 24 gauge bulk cable to the 1DF for cross connecting, or direct to the meters per job requirements.

E. PAYSTATION TONE

Lines assigned to paystations must have a class of service tone to the operator when CLR or TSPS ON1 Toll trunks are used. When all toll service is to TSPS and identified the paystation tone is not required.

Two methods of applying the tone are used; the sleeve method, where dial tone is applied to the sleeve of the line circuit, and the 4th wire method where the tone is applied by the trunk, if a ground is present on the LR lead from the finder (4th wire). ITEC trunks can be arranged to work either sleeve or 4th wire as required.

Level marking is done on a line card basis by strapping the COS posts associated with the line card on the line backplane. When the COS strap is in place for a line card all lines on that card will cause a ground to be placed on the LR lead from the finder for the duration of the call.

To apply tone to the line sleeve it is necessary to mount a 3 X 20 terminal block on the H1DF that will have dial tone wired to the back row of pins. Connect a .22 MF non polorized capacitor ITEC PN 220201-100224 (specify long leads) between pins 1 & 3. Pin 1 is then jumpered to the line sleeve on the MDF.

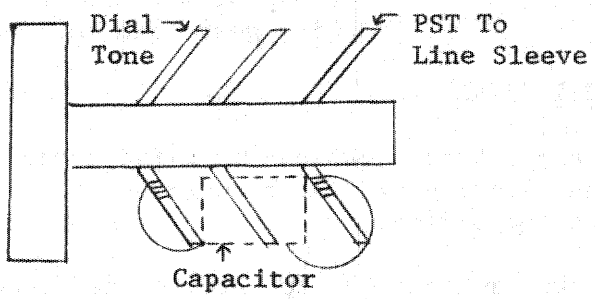

TCI Library www.telephonecollectors.info

F. TIP, RING, SLEEVE AND LEVEL RESTRICT LEADS TO SELECTOR

The leads are all contained in the 25 pair connector on the Finder backplane. Use a 25 pair connectorized cable to extend these leads to the IDF for crossconnecting to selectors.

The IDF terminal block layout pin assignments and lead colors are presented below.

Pin & Color Assignments

(25 Pair Cable from Finder to IDF)

FINDER	LEAD									
	TIP		RING		SLEEVE		NOT USED		LR	
	COLOR	PIN	COLOR	PIN	COLOR	PIN	COLOR	PIN	COLOR	PIN
1	WH-BL	26	BL-WH	1	WH-OR	27	ORN-WH	2	V-BL	46
2	WH-GR	28	GR-WH	3	WH-BR	29	BR-WH	4	BL-V	21
3	WH-SL	30	SL-WH	5	R-BL	31	BL-R	6	V-OR	47
4	R-OR	32	OR-R	7	R-GR	33	GR-R	8	OR-V	22
5	R-BR	34	BR-R	9	R-SL	35	SL-R	10	V-GR	48
6	BK-BL	36	BL-BK	11	BK-OR	37	OR-BK	12	GR-V	23
7	BK-GR	38	GR-BK	13	BK-BR	39	BR-BK	14	V-BR	49
8	BK-SL	40	SL-BK	15	Y-BL	41	BL-Y	16	BR-V	24
9	Y-OR	42	OR-Y	17	Y-GR	43	GR-Y	18	V-SL	50
10	Y-BR	44	BR-y	19	Y-SL	45	SL-Y	20	SL-V	25

SPECIAL NOTE for Exchanges with AE 101 Director

The AE 101 Director can have one of two different circuit figures for the line finder interface. Figure 2 is normally used when the Director is added to an existing exchange, Figure 2 is loop start and standard EMS-1 Finders are compatible. Figure 1 is normally used when the director is installed with the initial installation. Figure 1 is ground start and controls the finder start function from a register seizure completion signal.

When Figure 1 (A or B) is equipped, it is necessary to modify the ITEC line finder and allotter per engineering change order 1814. Also, it is necessary to cable 2 additional leads (FSA & FSB) from the finder backplane to the Director. The required Modification is not complex and can be done in the field, however, it should be done in the factory if possible.

The installer shall connect lead FBG from the Director to the finder sleeve at the IDF.

The installer must run a 10 pair cable from the Finder Backplane to the IDF for leads FSA and FSB. FSA connects to pin B12, FSB connects to pin A12.

TCI Library www.telephonecollectors.info

G. MATRIX CARD LINE CABLES TO MDF

The Matrix Card Line Cables are 25 pair connectorized cables. Two cables are required for each matrix card. The cable near the front of the matrix card is for lines 1-16 and the cable near the rear of card is for lines 17-32.

Note: Be sure matrix cards are strapped for their installed position prior to installation. Also see item J on next page.

Matrix cables can be ordered connectorized on both ends or just on the matrix card end. The charts below give pin assignments and color code information for terminating the non connectorized end.

Pins 25 and 50 with Slate-Violet pair are not used.

Enough slack should be left in the matrix cables to allow a card to be pulled out of the front of the cage to unplug the cables, if necessary for maintainence.

Matrix Line cables plug into the left end of the Matrix cards as viewed from the rear of the cage.

Line Cable Color Code

LEAD DES	WIRE COLOR	PIN NO.
T1	WHT-BLU	26
R1	BLU-WHT	1
S1	WHT-ORN	27
S2	ORN-WHT	2
T2	WHT-GRN	28
R2	GRN-WHT	3
T3	WHT-BRN	29
R3	BRN-WHT	4
S3	WHT-SL	30
S4	SL-WHT	5
T4	RED-BLU	31
R4	BLU-RED	6
T5	RED-ORN	32
R5	ORN-RED	7
S5	RED-GRN	33
S6	GRN-RED	8
T6	RED-BRN	34
R6	BRN-RED	9
T7	RED-SL	35
R7	SL-RED	10
S7	BLK-BLU	36
S8	BLU-BLK	11
T8	BLK-ORN	37
R8	ORN-BLK	12

LEAD DES	WIRE COLOR	PIN NO.
T9	BLK-GRN	38
R9	GRN-BLK	13
S9	BLK-BRN	39
S10	BRN-BLK	14
T10	BLK-SL	40
R10	SL-BLK	15
T11	YEL-BLU	41
R11	BLU-YEL	16
S11	YEL-ORN	42
S12	ORN-YEL	17
T12	YEL-GRN	43
R12	GRN-YEL	18
T13	YEL-BRN	44
R13	BRN-YEL	19
S13	YEL-SL	45
S14	SL-YEL	20
T14	VIO-BLU	46
R14	BLU-VIO	21
T15	VIO-ORN	47
R15	ORN-VIO	22
S15	VIO-GRN	48
S16	GRN-VIO	23
T16	VIO-BRN	49
R16	BRN-VIO	24

NOTE: The EMS-1 lines number from 01 to 96. If a different numbering pattern is desired on the MDF, the installer shall connect the cables accordingly.

TCI Library www.telephonecollectors.info

H. MATRIX CARD TO LINE CARD CABLES

The Installer must install 6 connectorized 4 ft. 25 pair cables to connect the Line card Backplane to the Matrix cards. The cables must be plugged into the right end of the Matrix card as viewed from the rear of the cage.

When installing the Matrix cards, start with the lowest equipped card. Install the cables onto each card in turn before installing the next card above. Work from the rear of the cage.

Viewing the Line Backplane from the rear the cables are identified as follows, reading from right to left:

Cable	Lines	Matrix
1	1-16	1 Front
2	17-32	1 Rear
3	33-48	2 Front
4	49-64	2 Rear
5	65-80	3 Front
6	81-96	3 Rear

J. RIBBON CABLES - FINDER TO MATRIX CARDS

Each finder must be connected to the Matrix cards equipped in the module. Use the 26 conductor ribbon cables supplied with the Matrix cage. Care must be used to insure the ribbon cable connectors are mated properly when plugging them on the backplane and Matrix card connectors. Install all ribbon cables even if all finder positions are not equipped.

K. TEST LINE

The Installer must run a 3 conductor jumper (T,R & S) from the backplane of the Finder Cage to the backplane of the Line Cage. This jumper connects line 96 to the test jack in the Finder Cage Test Card.

In the event the Module is equipped with less than 96 lines, the Installer must run the jumper to the line selected as a test line where it appears on the backplane.

2.4 GRADING & TRAFFIC

A. EMS-1 equipment has traffic characteristics that are nearly identical to those of existing SXS switching systems. Refer to ITEC Traffic Calculations Instruction I-2000 for more complete information.

Finders in a given Line Module should be cross connected to Selectors in various Modules to distribute traffic over the Selector outlets of graded groups.

B. For installations requiring more than 10 finders per Module use overflow module 800012. See Technical information I-2114.

TCI Library www.telephonecollectors.info

FIGURE 2

INSTALLER WIRING

REAR VIEW

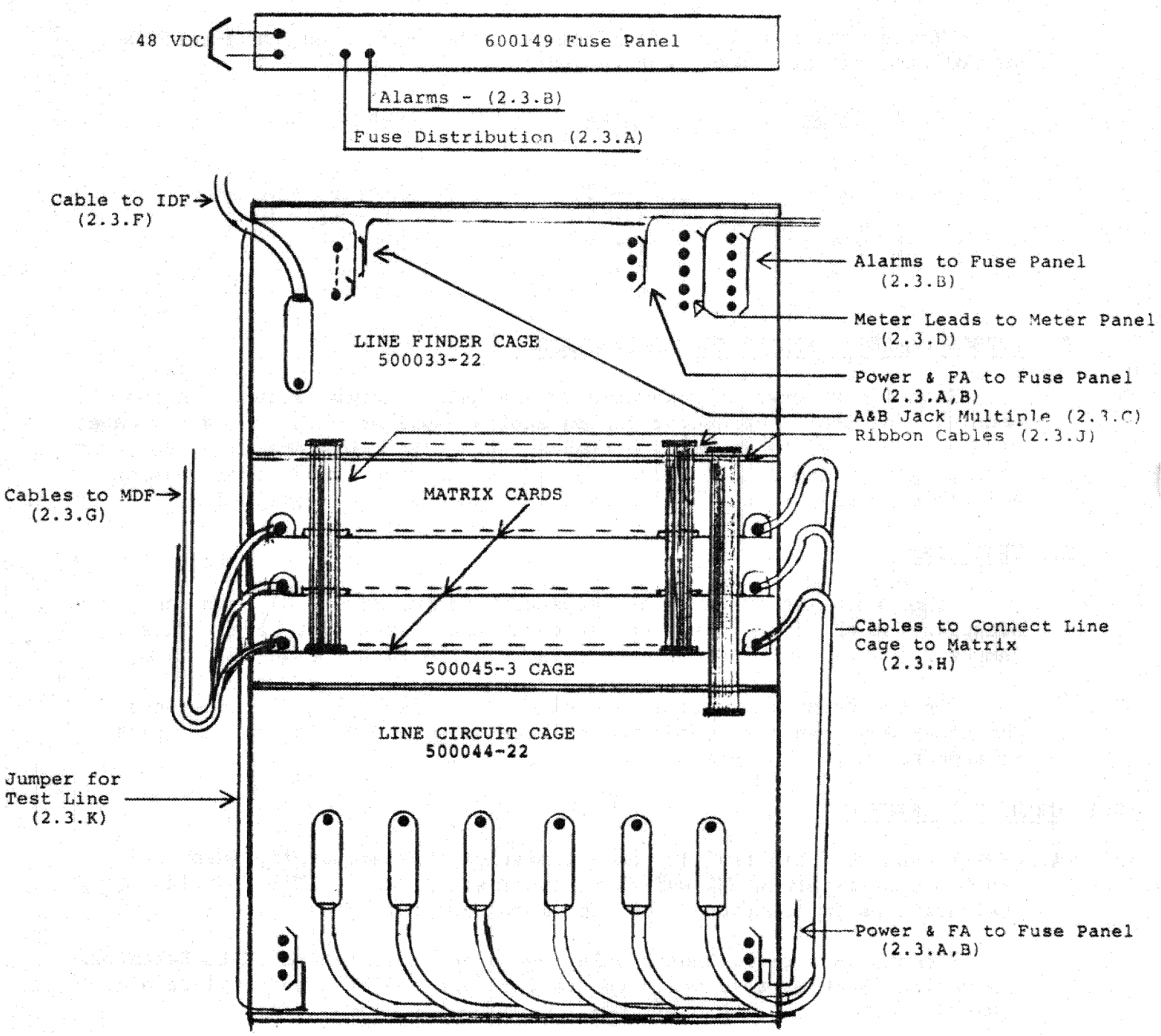

NOTES: 1. The numbers in parenthesis indicate the text paragraph that explains the associated wiring.

2. All wiring to the Fuse Panel must be formed from the left side of the relay rack to allow the Fuse Panel to swing to one side for access from the Front of the bay.

TCI Library www.telephonecollectors.info

IDF TERMINAL BLOCK LAYOUT FOR FINDER MODULE 25 PR. CABLE

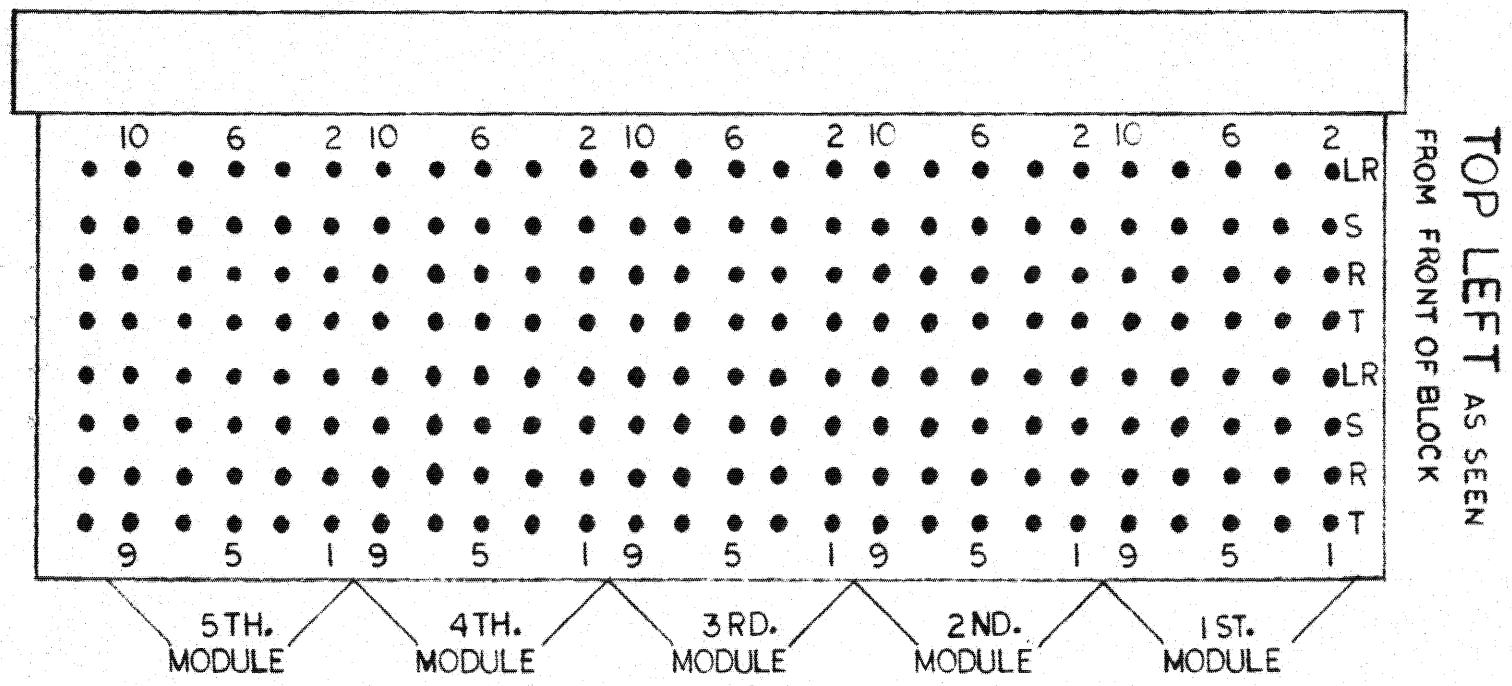

FIGURE 3

TCI Library www.telephonecollectors.info

TCI Library www.telephonecollectors.info

3.0 STRAPPING

3.1 GENERAL

EMS-1 equipment is very flexible in application and therefore must be programed to function as desired in each installation by use of strapping. This section explains the configuration of the equipment and how to strap.

Strapping can be done with wire wrap or using strapping clips ITEC PN 270087-000000 for adjacent pins. Strapping put on by wire wrap should be done with a hand gun to prevent static damage to the logic.

3.2 MATRIX CONFIGURATION

The matrix consists of 1, 2 or 3 relay cards. Each card has 32 Lines of T, R & S. The matrix card relays are controlled by the Finder. The matrix card must be strapped as explained below for its position number in the shelf. Battery and ground for the matrix card is also supplied by the associated Finder.

3.3 MATRIX STRAPPING

Each matrix card has ten independent groups of eight relays; each group is associated with a Finder. From one to three matrix cards may be associated with a cage of Finders. Each matrix card must be strapped to respond to signals from the control cards (Finders) as matrix card number 1, 2 or 3. Thus, there are ten groups of strapping posts; each associated with a group of relays. All groups of posts on any one matrix card must be strapped the same so that the entire matrix card with its common outlets will be addressed in the same fashion by each of the Finders.

Thus, for a three matrix card system, Strap C (common) to 1 (ten places) on the top card, C to 2 (ten places) on the next card down, and C to 3 (ten places) on the third card down from the top. Do not skip numbers (i.e. 1, 3, won't work.)

C posts - 10 places - Strap to 1, 2 or 3 to indicate which matrix card this is.

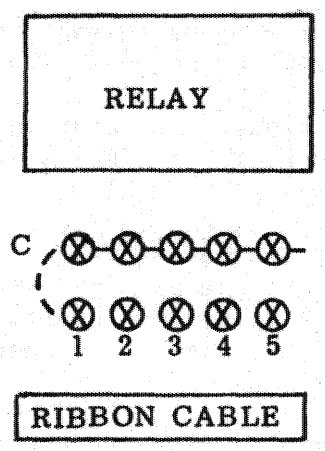

NOTES:
C posts are multipled on PCB

All ten positions must be strapped identical.

TCI Library www.telephonecollectors.info

3.4 LINE CARD STRAPPING

The Line Cards and Backplane do not require Installer strapping for most applications. However, the following straps are provided to tailor the equipment for specific requirements.

A. BACKPLANE

1. COS Strap - Install the COS strap for each line card that is to have an originating Class of Service. This strap causes the Finder to ground the LR lead to the 1st Selector for level restrict and/or 4th wire Paystation Tone. All 8 lines on the card are changed.

2. Line Disable, Ground Start, Loop Start - When a GS strap has been cut on the line card PCB, the line TIP is open from the A side of the edge connector on the backplane. It remains connected to the B side, however, (See drawings C600110 and C600111). To return the line to loop start, a strap or clip can be placed between the A and B side of the edge connector on the backplane. For example line 01 would be pins A14 and B14.

B. LINE CARDS

1. K Strap - Install the K strap when EMS-1 is added to systems with 900 to 1000 ohm cutoff relay coil resistance. Only necessary if revertive call by directory number is used.

2. Ground Start - The Line Cards are manufactured with the G straps being part of the circuit. To assign a line as a ground start line cut the G strap for that line between the 2 pads. If it is necessary to return the line to loop start, solder a wire loop between the pads or strap on edge connector at the back of cage. (See drawings A and C 600110 or 600111).

SPECIAL NOTE:

For ground start operation of line circuits

600110 KS Issue 9 or below and
600111 KS Issue 5 or below

Cut tracks from edge connector on component side of PCB as follows: (Do not cut G1-G8).
Line 1 (A14), Line 2 (A17),
Line 3 (A20), Line 4 (A23),
Line 5 (A26), Line 6 (A29),
Line 7 (A33), Line 8 (A36).
To restore circuit to loop start, solder jumper from edge connector to feed-thru to bridge out track.

On later issue line circuits the above straps at edge connector are properly marked G1-G8.

TCI Library www.telephonecollectors.info

3.5 ALLOTTER

The only straps on the Allotter are to shorten the length of the meter ground pulses from 150 ms to 50 ms. Strap pins 1 to 2, 5 to 6 & 7 to 8. DO NOT STRAP PINS 3 or 4. Use 50 ms when employing electronic scanner.

The strapping posts are located between the face plate and the monitor plug-on. Posts 1 thru 4 are located at the top of the PCB and posts 5 thru 8 are at the bottom. The posts number from bottom to top, ie, post 4 & 8 are the top posts.

3.6 FINDER

No straps are normally required on the Finder when equipped with the Tone Dialing option. If tone dialing is not equipped TI-TO & RI-RO must be strapped on the Finder where the Tone Dialing cable would normally plug on. These straps are factory equipped.

The "K" strap is installed when Finders are installed in ITT SXS exchanges using revertive call by directory number. This strap loads the sleeve with additional battery to permit the ITT connectors to properly test for revertive call.

The "K" strap is located at the top of the card near the face plate.

TCI Library www.telephonecollectors.info

TCI Library www.telephonecollectors.info

4.0 FUNCTIONAL DESCRIPTION & TESTING NOTES

The EMS-1 Line and Finder equipment can be tested using the same procedures commonly used to test any SXS type switching equipment. The Technician has a distinct advantage, however, of having many Light Emitting Diodes (LED's) and a digital display on the Allotter to show the progress of the call being processed.

The explanation below will first explain the functions of LED's and then outline a testing procedure. Note that the digital display on the Allotter times out in 30 minutes and must be reset by operating the STEP/Monitor switch if more time is needed.

4.1 FUNCTION OF LED's BY CIRCUIT

(1) LINE CARD

A. L1 thru L8 (Line 1 thru 8) indicate line busy from either an originating or terminating call. Also, flash at 240 1PM to show delayed dial tone, flash at 60 1PM to show line in lockout.

B. REQ (Request)

Indicates a line is requesting the Allotter to connect a Finder.

C. PS (Permanent Signal)

On lockout line circuits shows a line has been in lockout for 40 minutes or more.

D. FA (Fuse Alarm)

Indicates a blown fuse on the card. (2 fuses on line card.)

(2) FINDER

A. OS (Out of Service)

Shows that the busy switch has been operated to remove the finder from service.

B. BY (Busy)

Shows the Finder is in use.

C. NEXT

Indicates that the Allotter has preselected this Finder to be used by the next line to request service.

D. FA (Fuse Alarm)

Indicates a blown fuse on the Finder card.

TCI Library www.telephonecollectors.info

(3) ALLOTTER

A. AFB (All Finders Busy)

Indicates that all Finders are busy, either from use or manually busied out.

B. MIN (Minor)

Indicates that a Finder is selected, but the Allotter was unable to establish a connection in 1 second.

C. MAJ (Major)

Indicates that Finders are available but the Allotter is unable to select one for use in 50 seconds.

D. FA (Fuse Alarm)

Indicates a blown fuse on the Allotter card.

E. DIGITAL DISPLAY

Controlled by the Allotter Monitor plug on.

1. FIND

Indicates 1 thru 0 to correspond to Finders 1 thru 10. Operate STEP key to select the Finder desired to be observed.

2. LINE NUMBER

Indicates the Line number that the selected Finder served during the present or last time to be used. The monitor stores in memory the last line served by each finder, even if the display is not on. To recall this information, operate the STEP key until the Line in question is displayed. The Finder that handled the call will be indicated by the FIND display.

When the MONITOR switch is left operated, each call being processed will be displayed.

4.2 GENERAL OPERATING INDICATIONS OF LED's

A. ALL LINES IDLE

The only LED that should be illuminated is the NEXT LED on the Finder that is next in line to service a request. The digital display on the Allotter will function if the STEP/MONITOR switch is operated, however.

B. TERMINATING CALL

The L1-L8 LED for the line called will light. No other action will occur.

TCI Library www.telephonecollectors.info

C. ORIGINATING CALL, FINDERS AVAILABLE

The L1-L8 LED for the line requesting service will light. The REQ LED will flash. The Finder that had its next LED on will now go to busy and the Finder next in sequence will then have its NEXT LED illuminated to indicate it is available for the next request.

The Allotter Monitor (if on) will display the number of the line served.

If a lockout line, and the call was a revertive call that falls into lockout, or the call was timed out, etc., the L1-L8 LED will start to flash at 60 1PM. After 30 minutes the PS LED will illuminate.

D. ORIGINATING CALL, ALL FINDERS BUSY

The AFB LED on the Allotter will be on. The L1-L8 LED indicating the line requesting service will flash at 240 1PM and the REQ LED will light. When a Finder becomes available, the request will be served.

4.3 TEST OPERATIONS

Plug a hand test telephone (Butt-in) with a 310 plug into the line jack on the Test Line Access card in position 12 of the Finder cage. Assuming line 96 is equipped, it should be able to be seized from the line test jack. Rotate through all equipped Finders. If trouble is encountered, check for proper fusing and check that the flat cables are properly installed. (A Finder that falls off is usually caused by a flat cable connector that is not plugged on properly, or jumpers not properly connected to the 1st Selector)

A. If all Finders can be accessed and held from the test line, seize each line from the MDF. Check line cables on any lines that do not operate properly.

B. When all lines are able to be accessed, reseize all lines with a 2000 ohm resistance to assure their operation on long lines.

C. While it is good practice to seize all lines into every Finder, it is not necessary on EMS-1 to check all matrix operations. All relays and apparatus operation can be verified by seizing the following lines.

1,2,3,4,8,12,16,20,24,28,32,36,40,44,48,52,56,60,64,68,72,76,80,84, 88,92 & 96.

D. If lockout lines are equipped, allow a line to time out and verify that the line LED flashes at 60 1PM and the PS LED comes on after 30 to 40 minutes. Also verify the PS alarm outputs on the Backplane. There is ground on the PS lead when the line goes into lockout, and ground on the DEL PS lead when the PS LED lights.

E. Busy all Finders and seize a line. Observe that all OS LED's are illuminated as well as the AFB LED on the Allotter. Observe that the line LED flashes at 240 1PM and the REQ LED is on. Remove the busy from a Finder and a connection should be made. Check the ATB meter lead for operation when all Finders were made busy. Check the Req. Peg

TCI Library www.telephonecollectors.info

and Del. Call Meters for a peg when the line is seized. The Del. Call lead should have ground present while the call is blocked. The Peg Count Meter should operate when the call is processed.

F. Test fuse alarms by placing a blown fuse in one card in each cage in turn. Fuse alarms should be major in the Line Module.

G. Check that the Allotter alarms are connected properly by applying a 120 ohm ground to the Major & Minor alarm posts in turn on the Finder Backplane. (It is not practical to cause these alarms to function during testing.)

H. Verify that each Finder is cross-connected to the proper Selector and fill in the routing card on the Matrix cover.

J. If finders are equipped with the Tone Dialing option (-15) dial both Tone and Dial pulse calls through each finder. Verify that up to 16 digits can be repeated and that recognition of tones can be terminated by operation of the # button.

K. Installation Test Procedure I-3014-10 is to be used as a guide and checklist to tests to be performed during installation. ITEC Installers are required to submit a signed copy to ITEC at the completion of the installation.

4.4 ADJUSTMENT PROCEDURE

This procedure provides instruction for field test and adjustment of line circuit off-hook loop detection. Loop limits can be adjusted to other than the 2000 ohms specified herein at local options.

A. TEST ITEMS REQUIRED

(1) Card Extender 500803
(2) Cord with test clips on each end.
(3) Decade box or two resistors one 2000 ohms, one 2400 ohms.
(4) Small potentiometer screw driver.
(5) Test receiver.

B. TEST PROCEDURE

(1) Pull dial tone on each line with a test receiver with a resistor in series for total of 2000 ohms resistance. Note, it is good practice to have a diode in the test receiver circuit to detect any pairs that may be reversed.

Note any lines that do not seize.

(2) Change resistor so that test receiver circuit has 2400 ohms resistance. Try to pull dial tone on each line (none should seize).

Note any lines that return dial tone.

TCI Library www.telephonecollectors.info

C. ADJUSTMENT PROCEDURE

(1) On line cards not passing the above operational test it will be necessary to adjust potentiometer R46 on 600110 cards or R45 on 600111 circuits.

(2) Put line card on extender board. Note: EMS line cards can be removed without cutting off lines that are busy.

(3) Seize each line with a 2000 ohm resistor, adjusting potentiometer as required. In turn, try to seize each line with 2400 ohms adjusting as required to prevent seizure. It is important to re-test all 8 lines on the card after any adjustment is made.

TCI Library www.telephonecollectors.info

TCI Library www.telephonecollectors.info

ISSUE	ECO NO	DATE	APPROVAL
1	[illegible]	[illegible]	
2	[illegible]	[illegible]	
3	[illegible]	[illegible]	
4	[illegible]	[illegible]	
5	[illegible]	[illegible]	
6	[illegible]	[illegible]	
7	[illegible]	[illegible]	

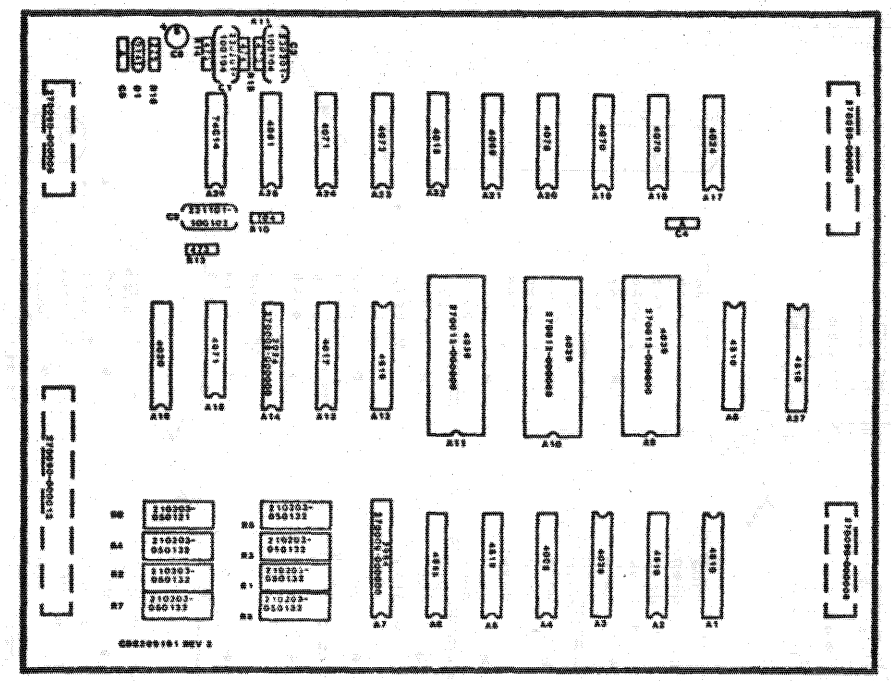

NOTES:

1. A = [illegible]
   B = [illegible]
2. THIS BOARD WILL SERVE AS BOTH [illegible] "A" AND "B".

ITEC

LINE FINDER MONITOR PLUG-ON

IMA500191-00

FCI Library www.telephonecollectors.info

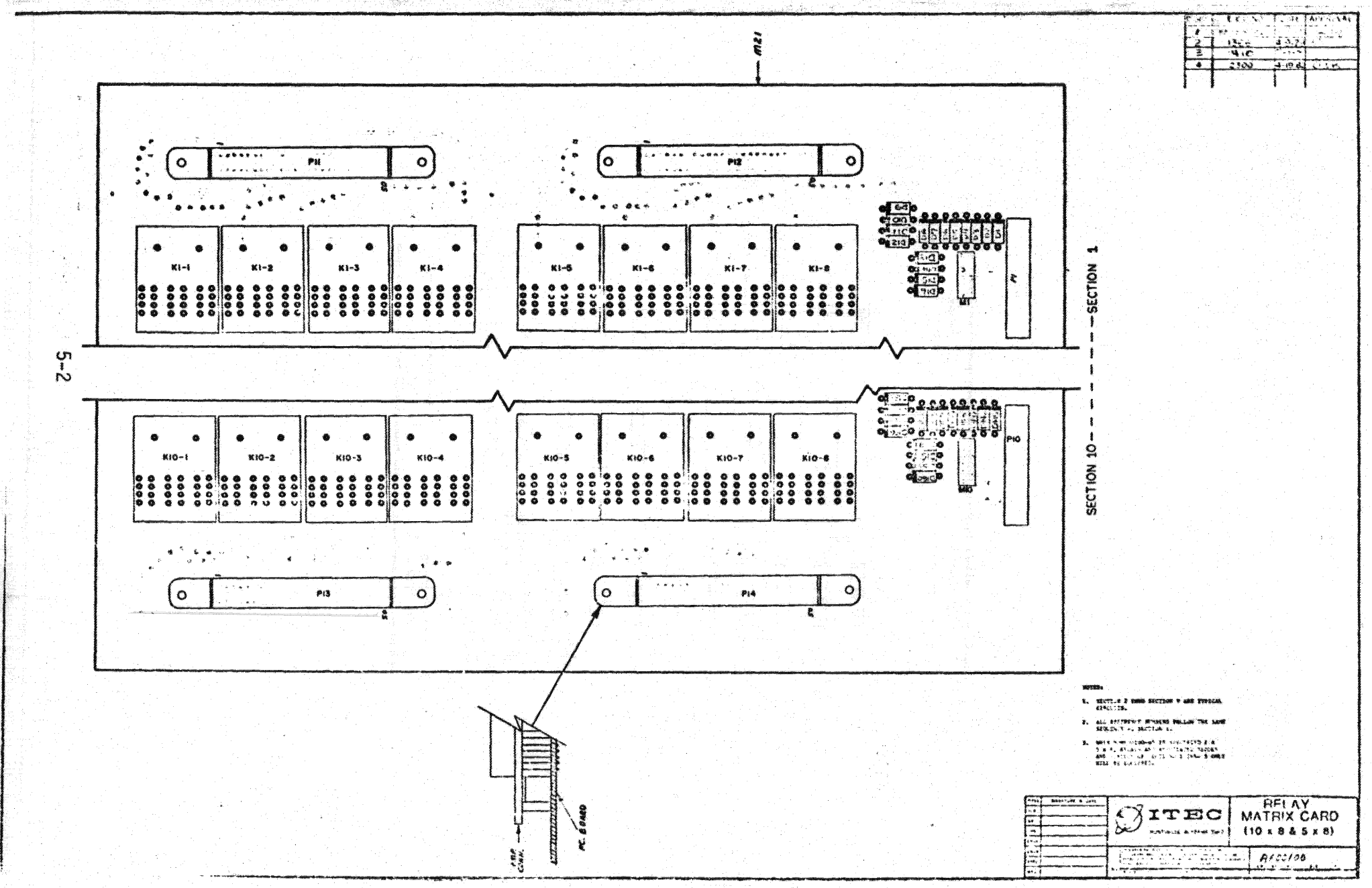

TCI Library www.telephonecollectors.info

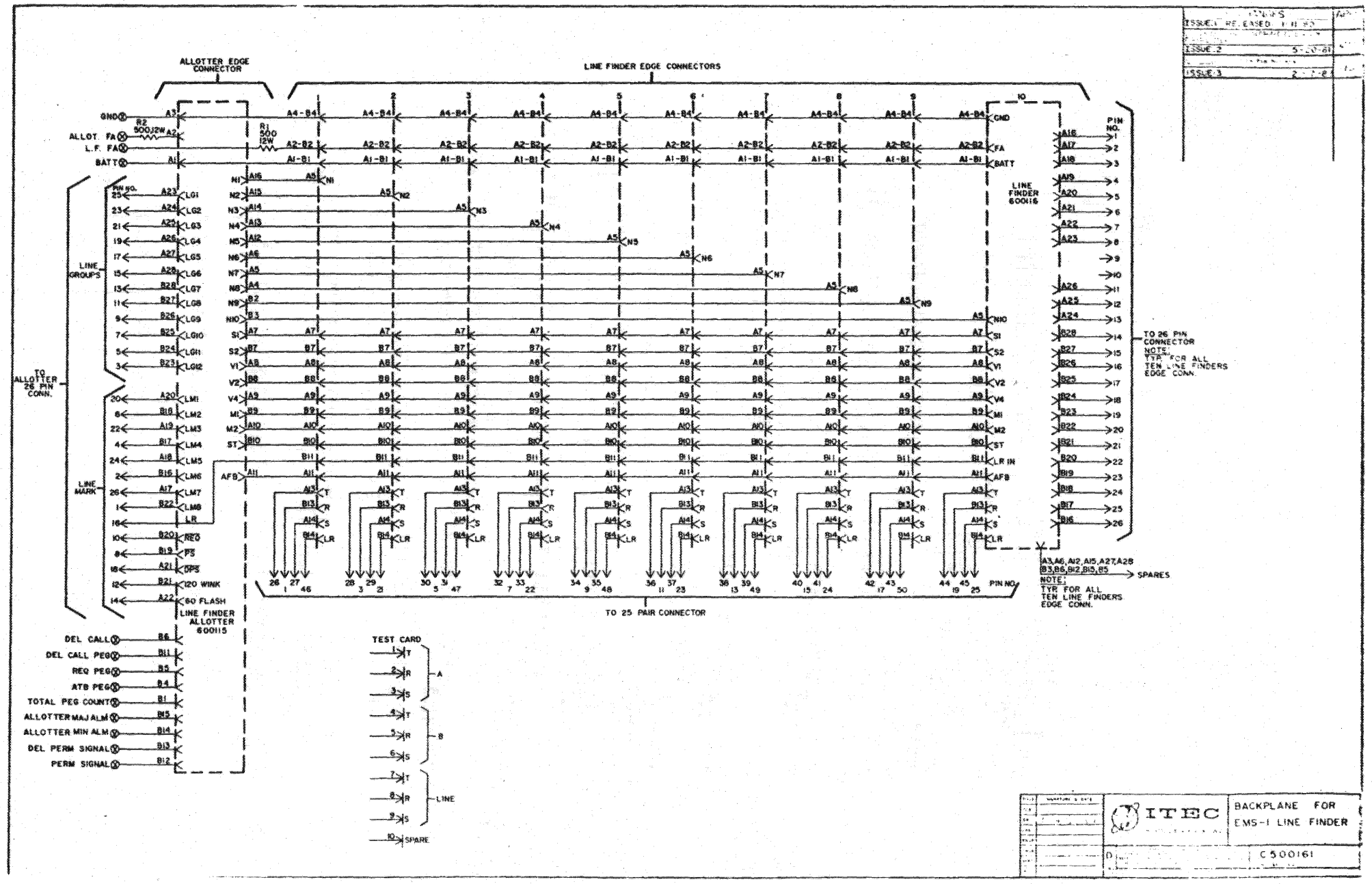

TCI Library www.telephonecollectors.info

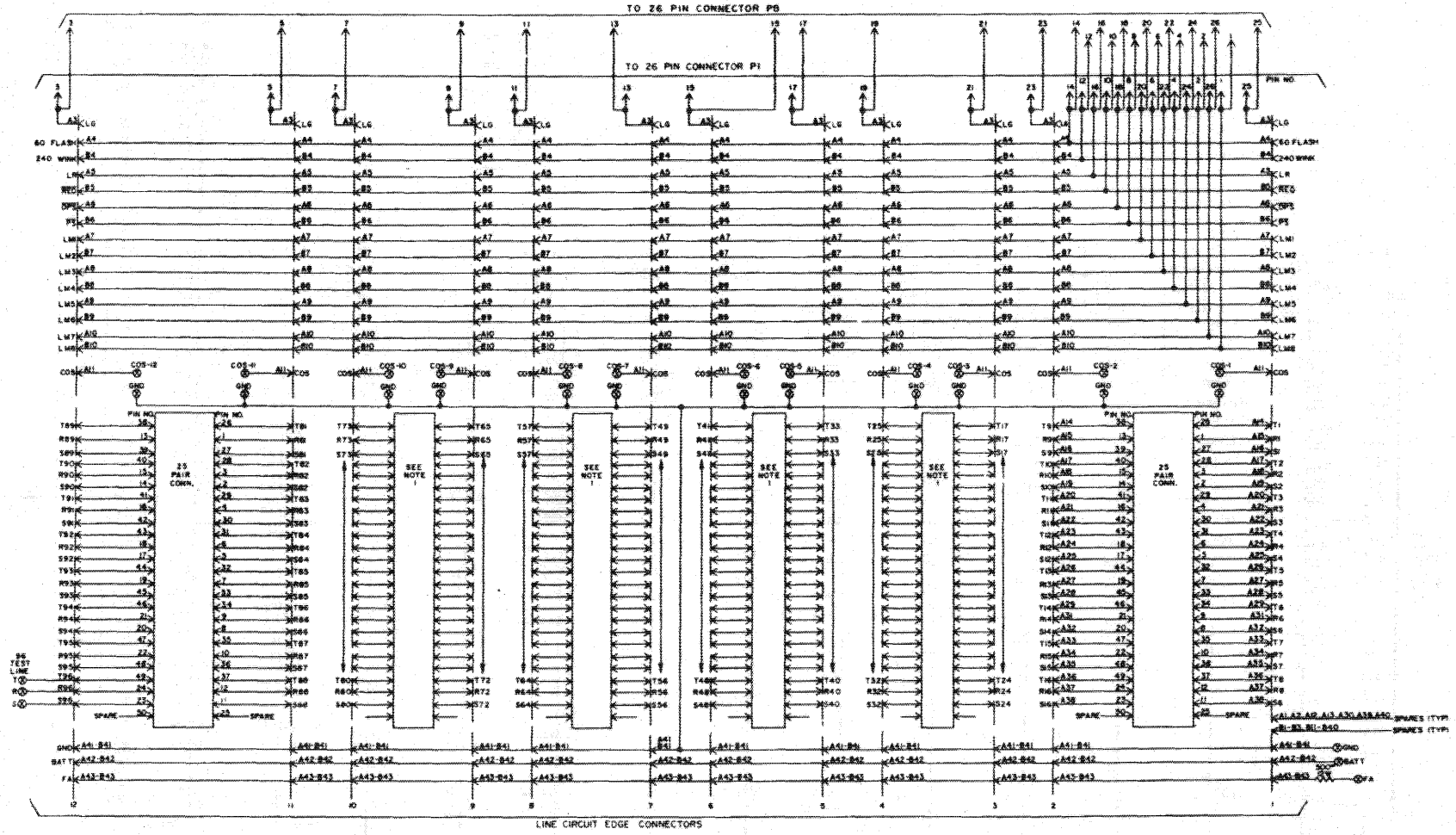

NOTE:
1. 25 PAIR CONNECTOR FOR LINE CIRCUIT EDGE CONNECTOR 3-4, 5-6, 7-8 AND 9-10 ARE IDENTICAL TO 25 PAIR CONNECTOR ON LINE CIRCUIT EDGE CONNECTOR 1-2.

EVC
LINE CIRCUIT BACKPLANE

C500162

TCI Library www.telephonecollectors.info

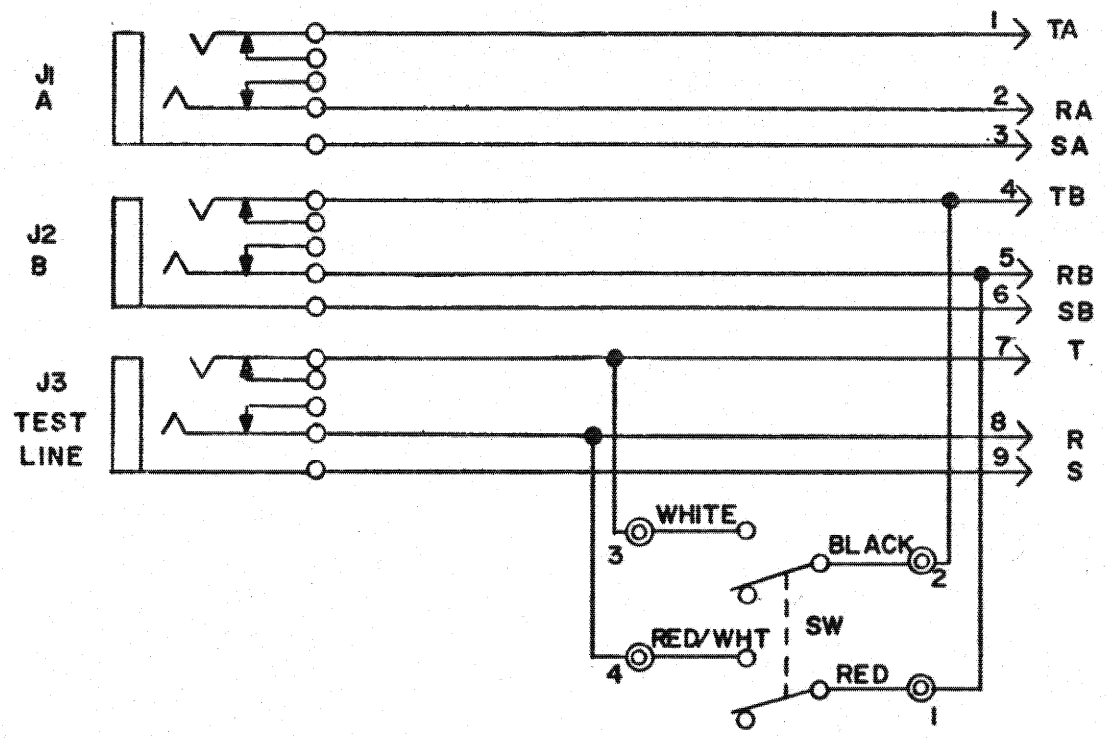

CHANGES	APPD
ISSUE: 1 RELEASED 6-13-79	
ECO-1842: CHANGES JACKS TO PCB MOUNTED TYPE.	
ISSUE: 2 5-14-81	

TITLE	SIGNATURE & DATE
TCR	
DR	6/15/79
CHK	
ENGR	
ENGR	
APPD	
MFG	

ITEC
HUNTSVILLE, ALABAMA 35802

EMS-1
TEST LINE ACCESS

THIS DRAWING OR SPECIFICATION IS THE PROPERTY OF ITEC COPIES ARE ISSUED IN STRICT CONFIDENCE AND SHALL NOT BE REPRODUCED OR COPIED, OR USED AS THE BASIS FOR THE MANUFACTURE OR SALE OF APPARATUS WITHOUT PERMISSION.

DWG SIZE | SCALE: | REF.

C600118

TCI Library www.telephonecollectors.info

TCI Library www.telephonecollectors.info

EMS-1 LINEFINDER BACKPLANE INSTALLER'S WIRING

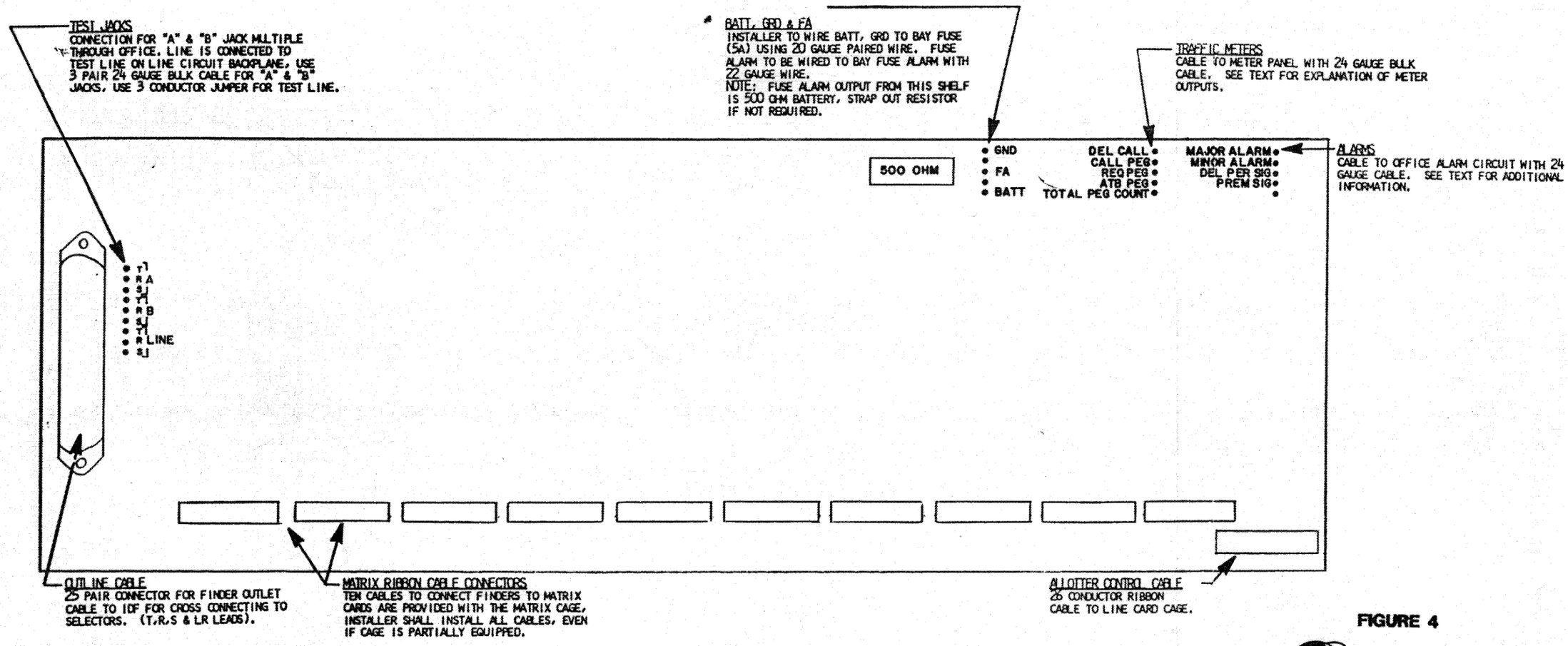

FIGURE 4

ITEC

650025

9-25-85

SHEET 1 OF 1

TCI Library www.telephonecollectors.info

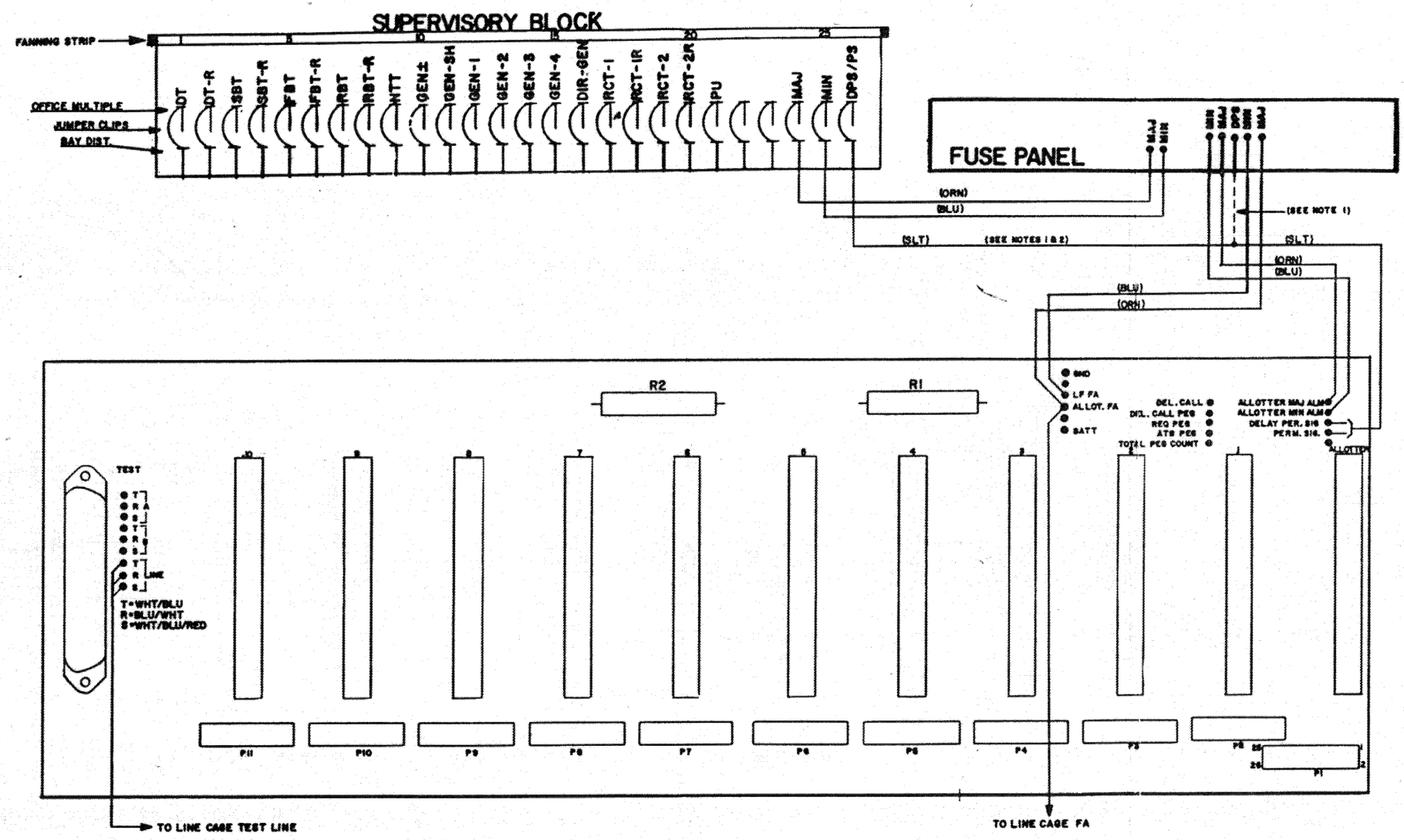

NOTES:

1. CONNECT DELAYED PERMANENT SIGNAL (DPS) TO FUSE PANEL ONLY IF CUSTOMER REQUESTS PERMANENT SIGNAL TO BE A MINOR ALARM. DPS IS NORMALLY CONNECTED TO 600151 ALARM CIRCUIT ONLY.

2. PERMANENT SIGNAL (PS) AND DPS ARE NOT USED IN THE SAME INSTALLATION. PS IS USED ONLY FOR ADDITION TO ELECTROMECHANICAL EXCHANGES HAVING A CENTRAL PERMANENT SIGNAL TIMER. DPS IS USED FOR EMS EXCHANGES PER NOTE 1.

FIGURE 4A

TITLE	SIGNATURE & DATE	ITEC HUNTSVILLE, ALABAMA 35802	EMS-1 LINEFINDER BACKPLANE ALARM WIRING
TCE	9-27-85		
DR	D. HILL		
CHK			
ENGR			
ENGR			650025
APPD			SHEET 2 OF 2
APPD			

TCI Library www.telephonecollectors.info

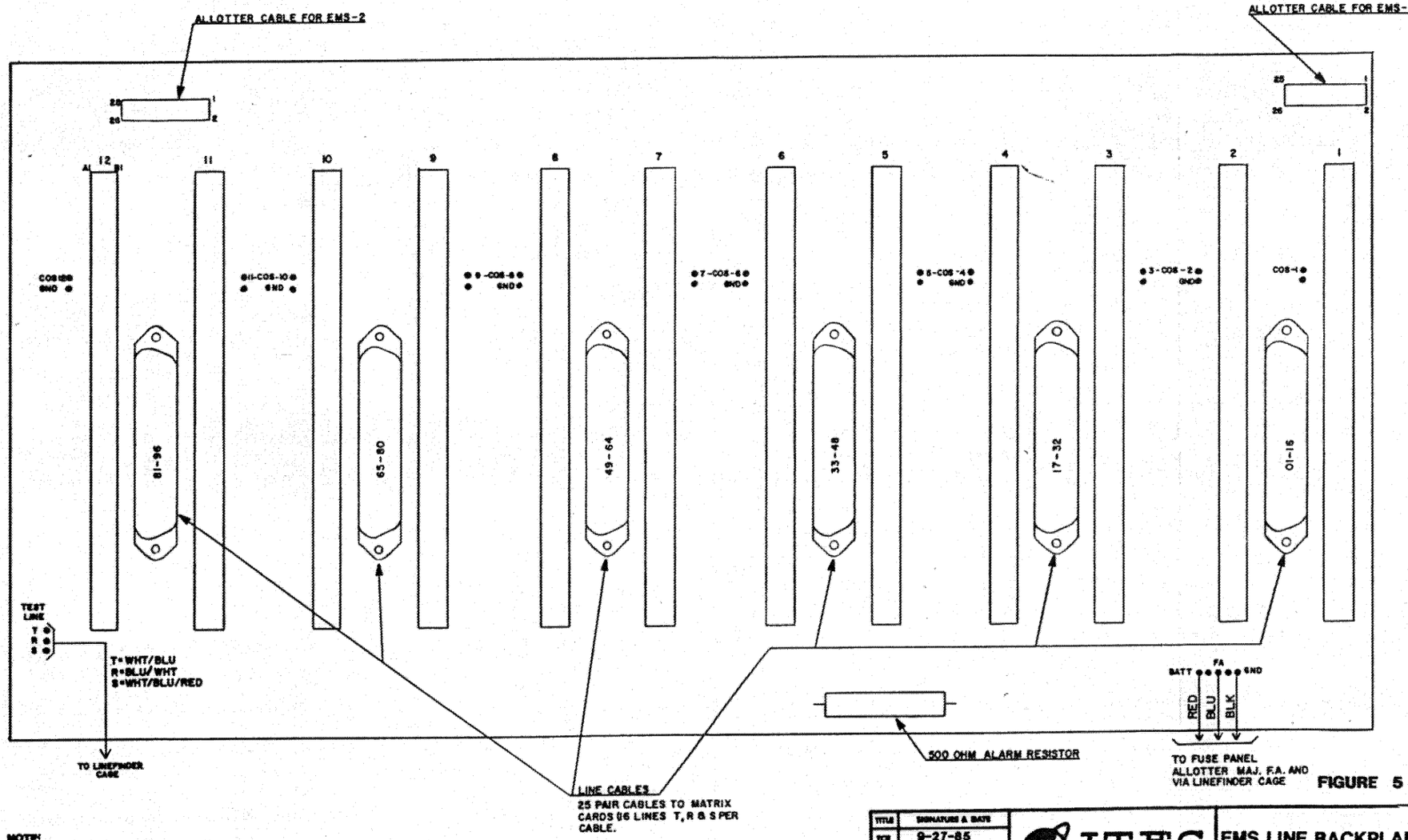

FIGURE 5

NOTE:

3. LINE CIRCUIT FUSE ALARM CAN BE MAJOR OR MINOR PER LOCAL PRACTICE. MAJOR IS PREFERRED.

TITLE	SIGNATURE & DATE
TCE	9-27-85
DR	G.HILL
CHK	
ENGR	
ENGR	
APPD	
APPD	

ITEC
HUNTSVILLE, ALABAMA 35802

EMS LINE BACKPLANE WIRING

650024

DWG. BASE NO.

SCALE:

TCI Library www.telephonecollectors.info

ISSUE	E.C.O. NO.	DATE	APPROVA
1	RELEASED	5-14-79	
2	1406	10-10-79	
3	1509	10-23-79	
4	1511	10-25-79	
5	1539	11-29-79	
6	1711	9-8-80	
7	1879	3-29-81	
8	1959	6-16-81	
9	2242	3-17-82	
10	2442	7-13-82	
11	2723	1-17-83	
12	2659	2-13-84	
13	3403	1-24-85	
14	3407	2-11-85	
15	3485	4-25-85	
16	3569	7-12-85	

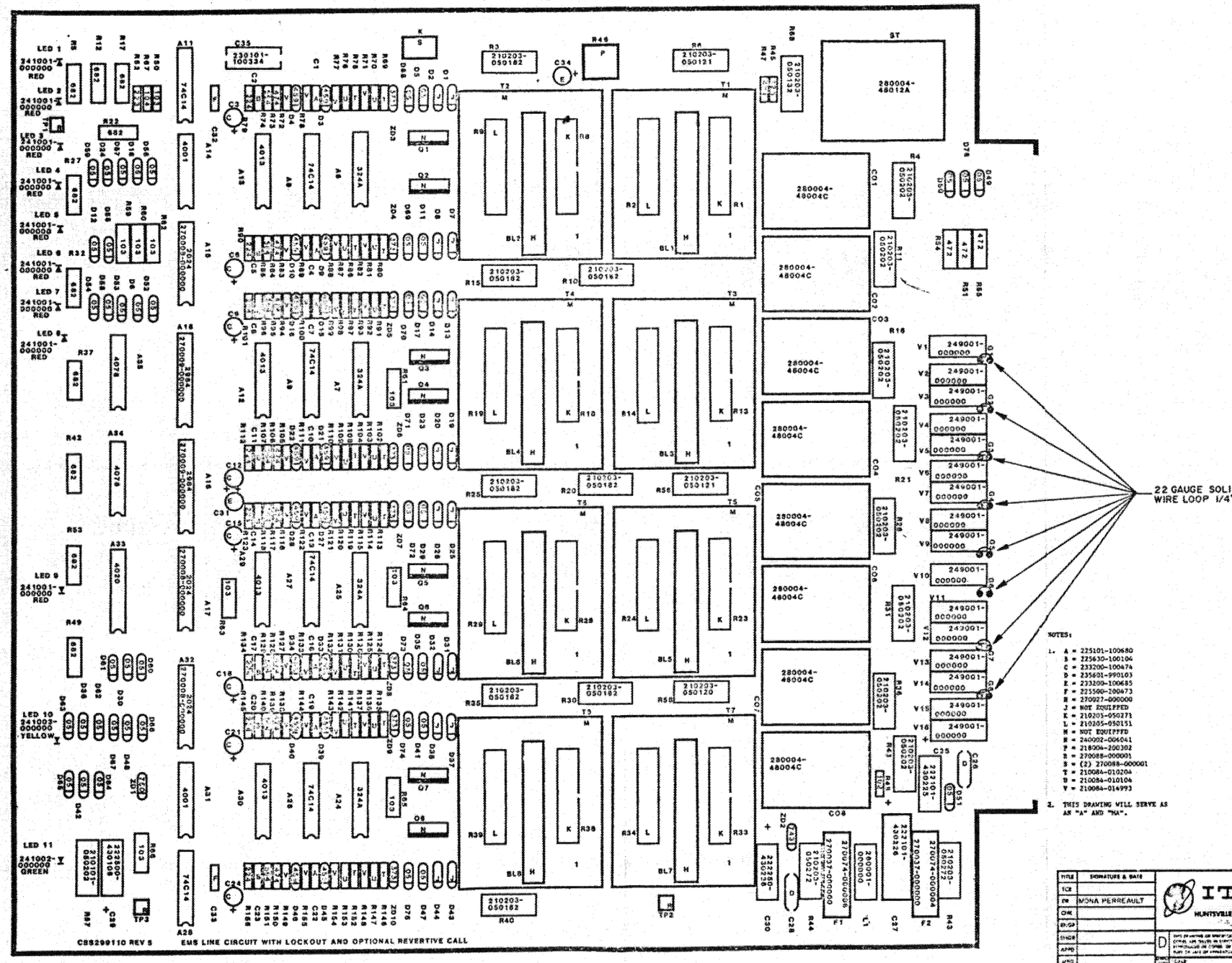

NOTES:

1. A = 225101-100680
   B = 225630-100104
   C = 233200-100476
   D = 235601-990103
   E = 233200-100685
   F = 225500-100473
   H = 270027-000000
   J = NOT EQUIPPED
   K = 210203-050271
   L = 210205-050151
   M = NOT EQUIPPED
   N = 240002-006041
   P = 218004-200302
   R = 270088-000001
   S = (2) 270088-000001
   T = 210084-010204
   U = 210084-010104
   V = 210084-014993
2. THIS DRAWING WILL SERVE AS AN "A" AND "MA".

	SIGNATURE & DATE
TITLE	
TCE	
DW	MONA PERREAULT
CHK	
ENGR	
ENGR	
APPD	
APPD	

ITEC
HUNTSVILLE, ALABAMA 35802

EMS LINE CIRCUIT WITH LOCKOUT AND OPTIONAL REVERTIVE CALL

D

MA600110-01

TCI Library www.telephonecollectors.info

ISSUE	E.C.O. NO.	DATE	APPRO
1	RELEASED	[illegible]	
2	1196	[illegible]	
3	1514	[illegible]	
4	1540	[illegible]	
5	1713	[illegible]	
6	1878	[illegible]	
7	1958	8-17-81	
8	2163	6-1-82	
9	2737	11-24-83	
10	2210	2-27-84	

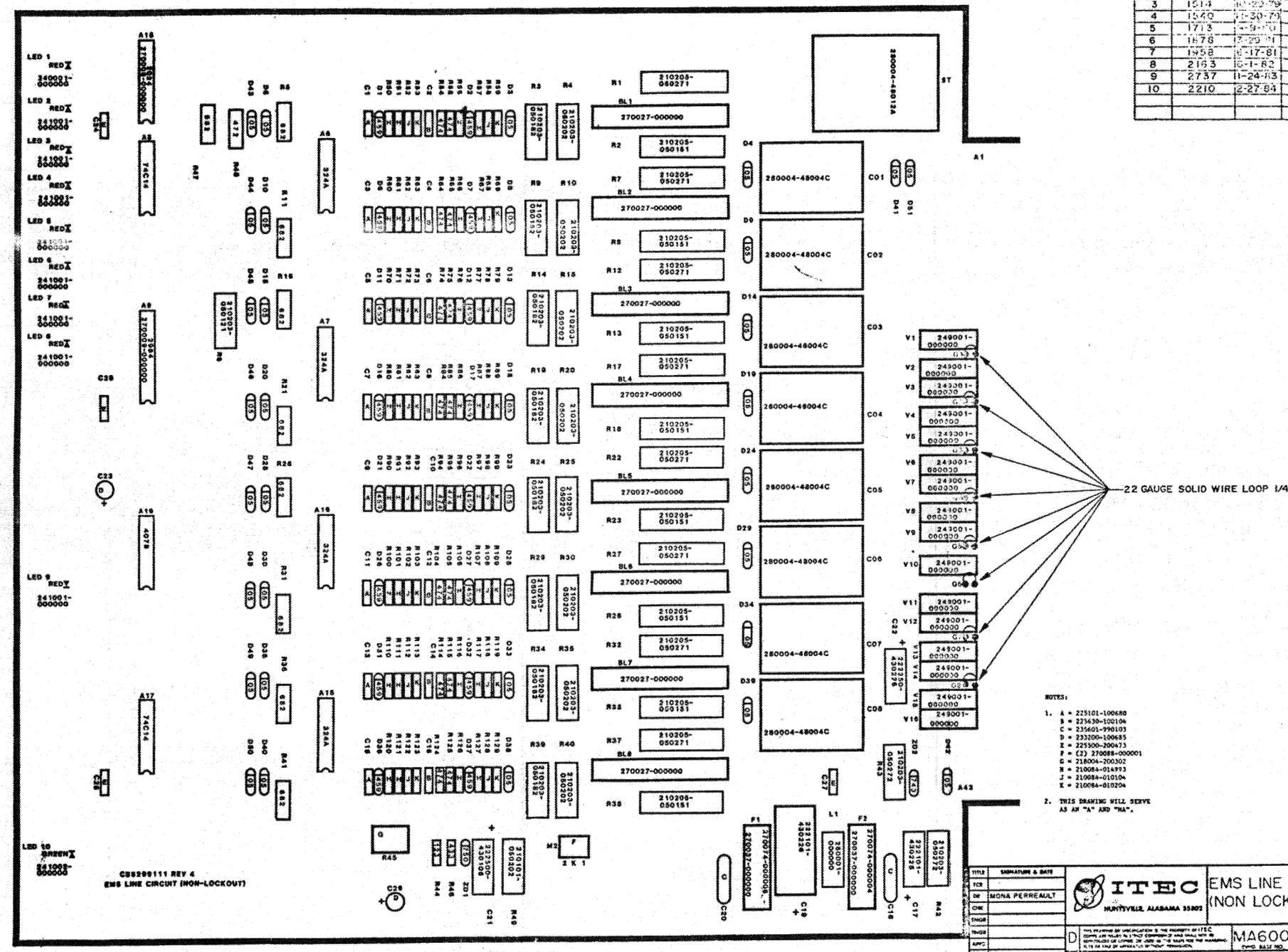

TCI Library www.telephonecollectors.info

ISSUE	E.C.O. NO	DATE	APPROVE
1	RELEASED	7-14-79	
2	1475	8-9-79	
3	1477	8-23-79	
4	1492	9-25-79	
5	1502	10-12-79	
6	1541	11-29-79	
7	1605	1-31-80	
8	1726	8-15-80	
9	1917	5-6-81	
10	2201	2-10-82	
11	2390	8-23-82	
12	2730	1-21-83	
13	3144	5-8-84	

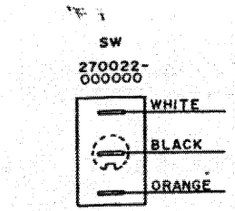

NOTE: SWITCH TO BE MOUNTED WITH KEY IN DOWN POSITION.

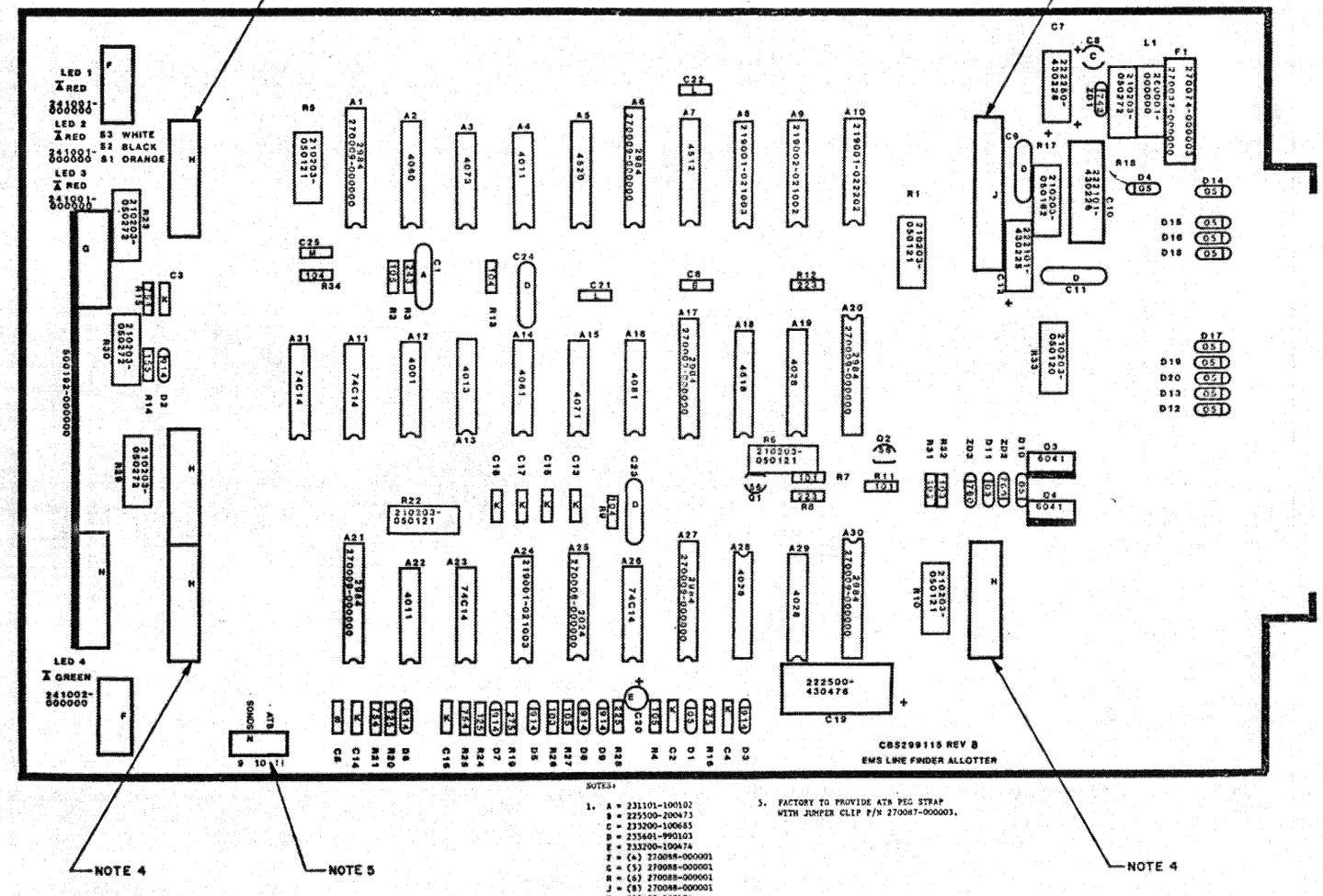

NOTES:

1. A = 231101-100102
   B = 225500-200473
   C = 233200-100685
   D = 235601-990103
   E = 233200-100476
   F = (4) 270088-000001
   G = (5) 270088-000001
   H = (6) 270088-000001
   J = (8) 270088-000001
   K = 225630-100104
   L = 225630-100102
   M = 225630-100103
   N = (3) 270088-000001

2. THIS DRAWING WILL SERVE AS BOTH AN "A" AND "NA".

3. 500192-000000 PLUG-ON MUST ALWAYS BE EQUIPPED AND SHOULD BE MOUNTED ON MOLEX POST STRIPS AS SHOWN.

4. 500191-000000 PLUG-ON MUST ALWAYS BE EQUIPPED AND SHOULD BE MOUNTED ON MOLEX POST STRIPS AS SHOWN.

5. FACTORY TO PROVIDE ATR PEG STRAP WITH JUMPER CLIP P/N 270087-000003.

TITLE	SIGNATURE & DATE
DR	MONA PERREAULT

ITEC
HUNTSVILLE, ALABAMA 35807

EMS LINE FINDER ALLOTTER

D

MA600115-00

TCI Library www.telephonecollectors.info

1	RELEASED	5-17-79	
2	1439	8-1-79	
3	1475	9-5-79	
4	1476	9-6-79	
5	1504	10-16-79	
6	1510	10-24-79	
7	1521	11-10-79	
8	1542	11-29-79	
9	1714	7-8-80	
10	1815	3-23-81	
11	2200	2-10-82	
11A	2812	3-15-83	
12	2374	7-20-82	
13	2813	3-15-83	
14	2931	10-14-83	
15	3312	9-25-84	

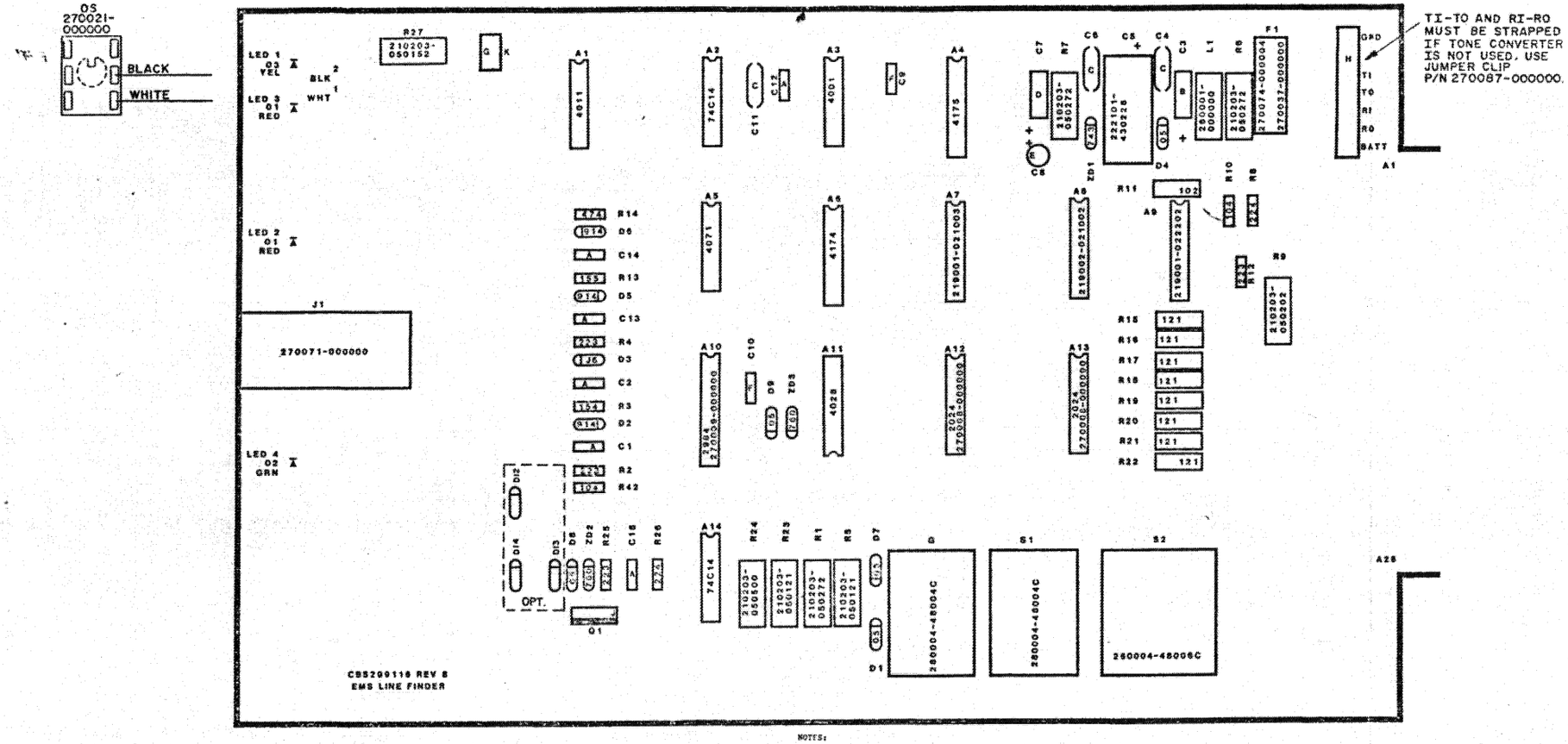

NOTES:

1. A = 225630-100104
   B = 222101-430225
   C = 233601-999103
   D = 222250-430226
   E = 233200-100685
   F = 225500-210423
   G = (2) 270093-000001
   H = (6) 270093-000001
   J = 240002-006041

2. THIS DRAWING WILL SERVE AS AN "A" AND "B".

TITLE	SIGNATURE & DATE	
SCH		
DR	MONA FERREAULT	
CHK		
ENGR		
ENG		
APPD		
MFG		

ITEC
HUNTSVILLE, ALABAMA 35802

EMS LINE FINDER

D

MA600116-00

TCI Library www.telephonecollectors.info

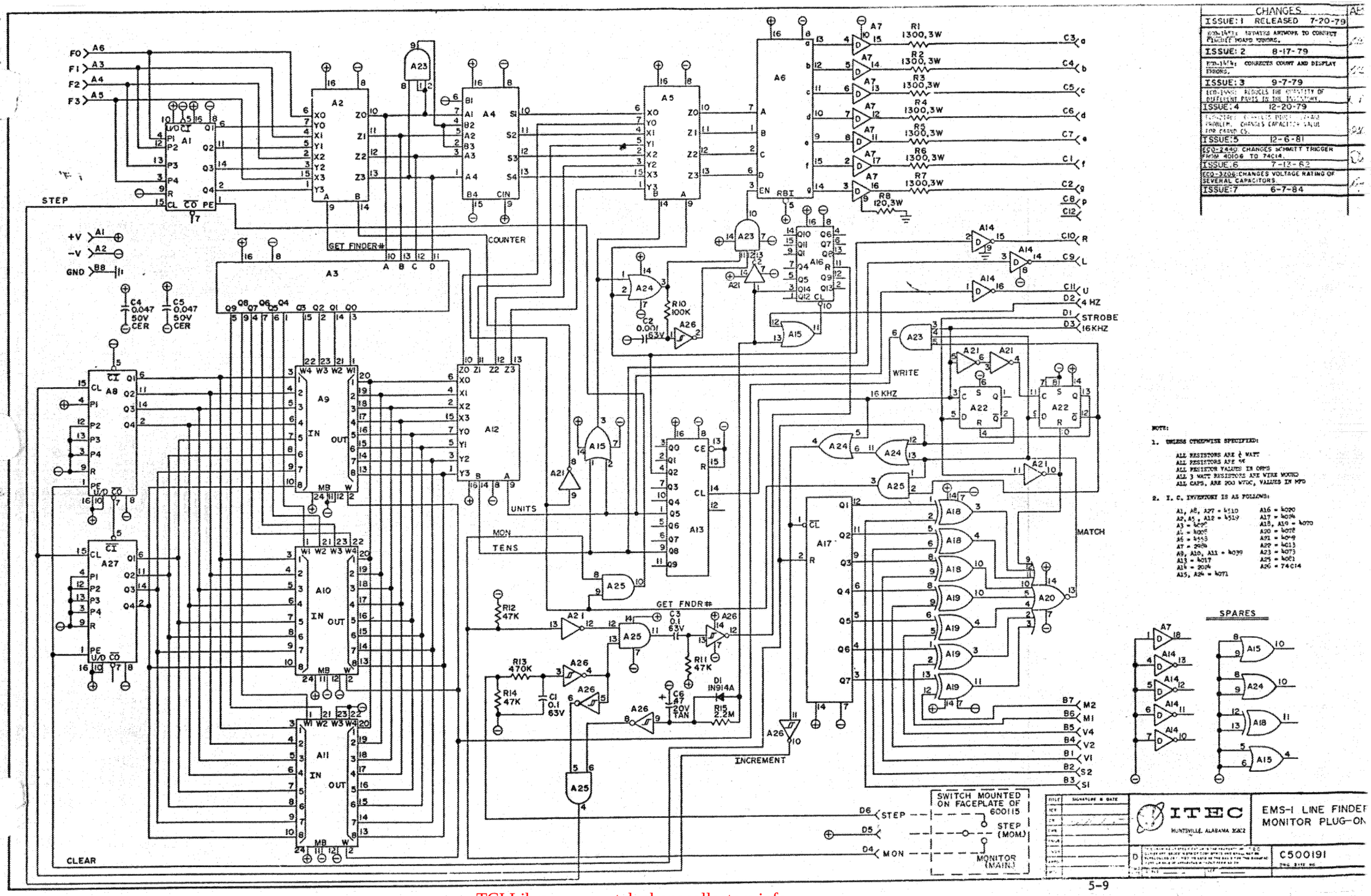

TCI Library www.telephonecollectors.info

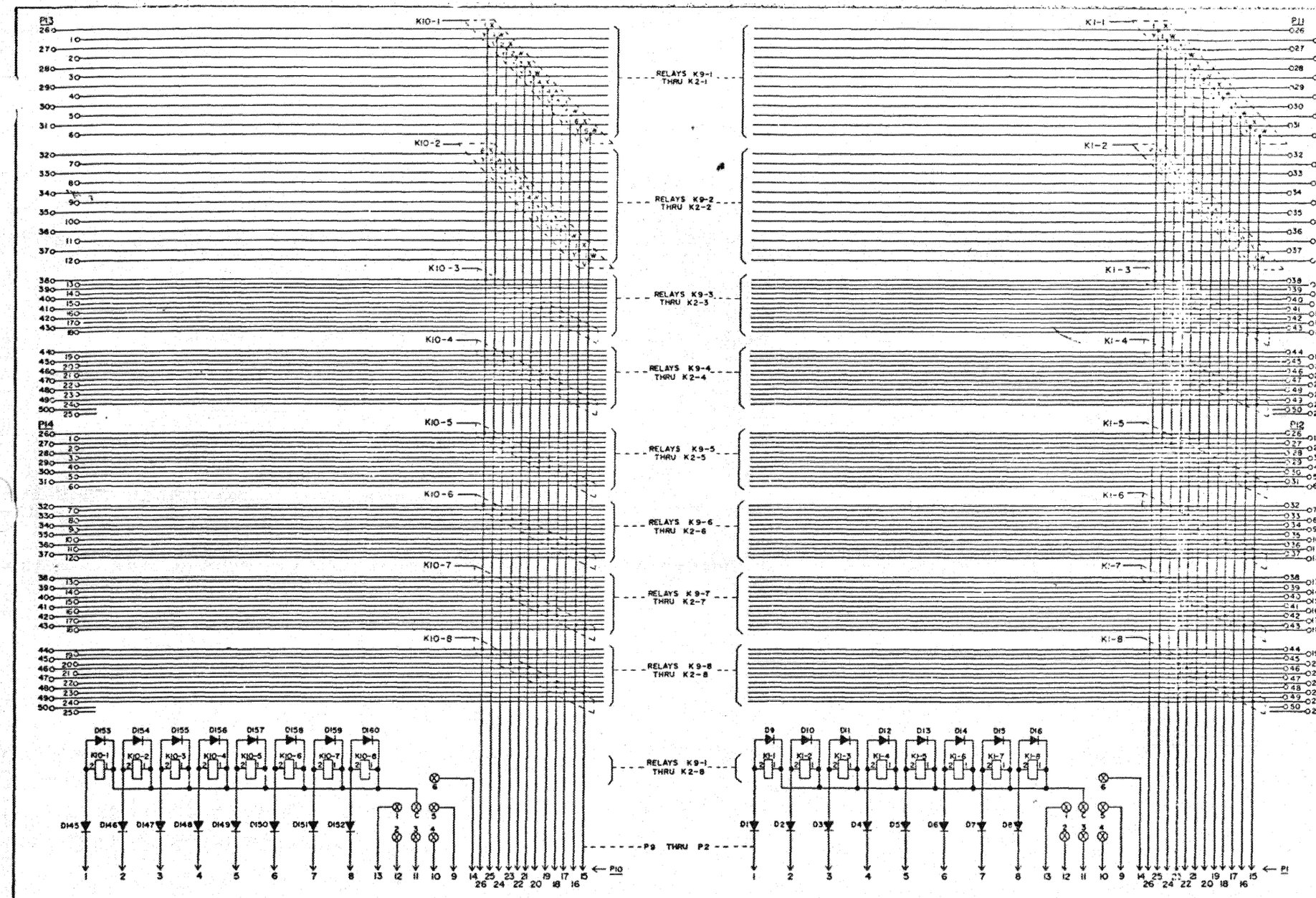

C-ANGES	
ISSUE 1 RELEASED 1-18-79	
ECO-2095 ADDS CARD POSITION SELECT #6.	
ISSUE 2 1-14-83	

NOTES:

1. ALL RELAYS WILL HAVE A COIL RESISTANCE OF 2100 OHMS AND A CONTACT FORM OF 12A. ALL DIODES WILL BE 1N4005 TYPE.

2. THE CONTACT ARRANGEMENT AS SHOWN FOR RELAY K1-1 WILL BE THE SAME FOR RELAYS K1-3, K1-5, K1-7, K2-1, K2-3, K2-5, K2-7, ---, K10-1, K10-3, K10-5 & K10-7.
THE CONTACT ARRANGEMENT AS SHOWN FOR RELAY K1-2 WILL BE THE SAME FOR RELAYS K1-4, K1-6, K1-8, K2-2, K2-4, K2-6, K2-8, ---, K10-2, K10-4, K10-6 & K10-8.

3. THE LEAD DESIGNATIONS FOR PINS 15-26 OF P1 (SAME FOR P2-P10) ARE AS FOLLOWS:

PIN NO.	LEAD DESIGNATION 1-WIRE	LEAD DESIGNATION 4-WIRE	PIN NO.	LEAD DESIGNATION 1-WIRE	LEAD DESIGNATION 4-WIRE
26	T1	T1	20	S1	S1
25	R1	R1	19	R1	R1
24	S1	S1	18	S1	S1
23	S2	SW1	17	S2	S1
22	T2	T2	16	T2	T1
21	R2	R2	15	R2	RW1

4. THE LEAD DESIGNATIONS FOR PINS 1-25 & 26-49 OF P11 (SAME FOR P12-P14) ARE AS FOLLOWS:

PIN NO.	LEAD DESIGNATION 1-WIRE	LEAD DESIGNATION 4-WIRE	PIN NO.	LEAD DESIGNATION 1-WIRE	LEAD DESIGNATION 4-WIRE
26	T1	T1	38	T2	T1
1	R1	R1	13	R2	R1
27	S1	S1	39	S2	S1
2	S2	SW1	14	S10	SW1
28	T2	T2	40	T10	T1
3	R2	R2	15	R10	R1
29	T3	S2	41	T11	S1
4	R3	RW2	16	R11	RW1
30	S3	T1	42	S11	T1
5	S4	R1	17	S12	R1
31	T4	S2	43	T12	S1
6	R4	SW1	18	R12	SW1
32	R5	T1	44	T13	T1
7	S5	R1	19	R13	R1
33	S6	S1	45	S13	S1
8	R6	RW1	20	S14	RW1
34	T5	T1	46	T14	T1
9	R5	R1	21	R14	R1
35	S7	S1	47	S15	S1
10	R7	RW1	22	R15	RW1
36	S7	T1	48	S15	T1
11	S8	R1	23	R16	R1
37	T6	S1	49	T16	S1
12	R8	RW1	24	R16	RW1

DRN	MONA PERREAULT	ITEC HUNTSVILLE, ALABAMA 35802
		RELAY MATRIX CARD
		C600100

TCI Library www.telephonecollectors.info

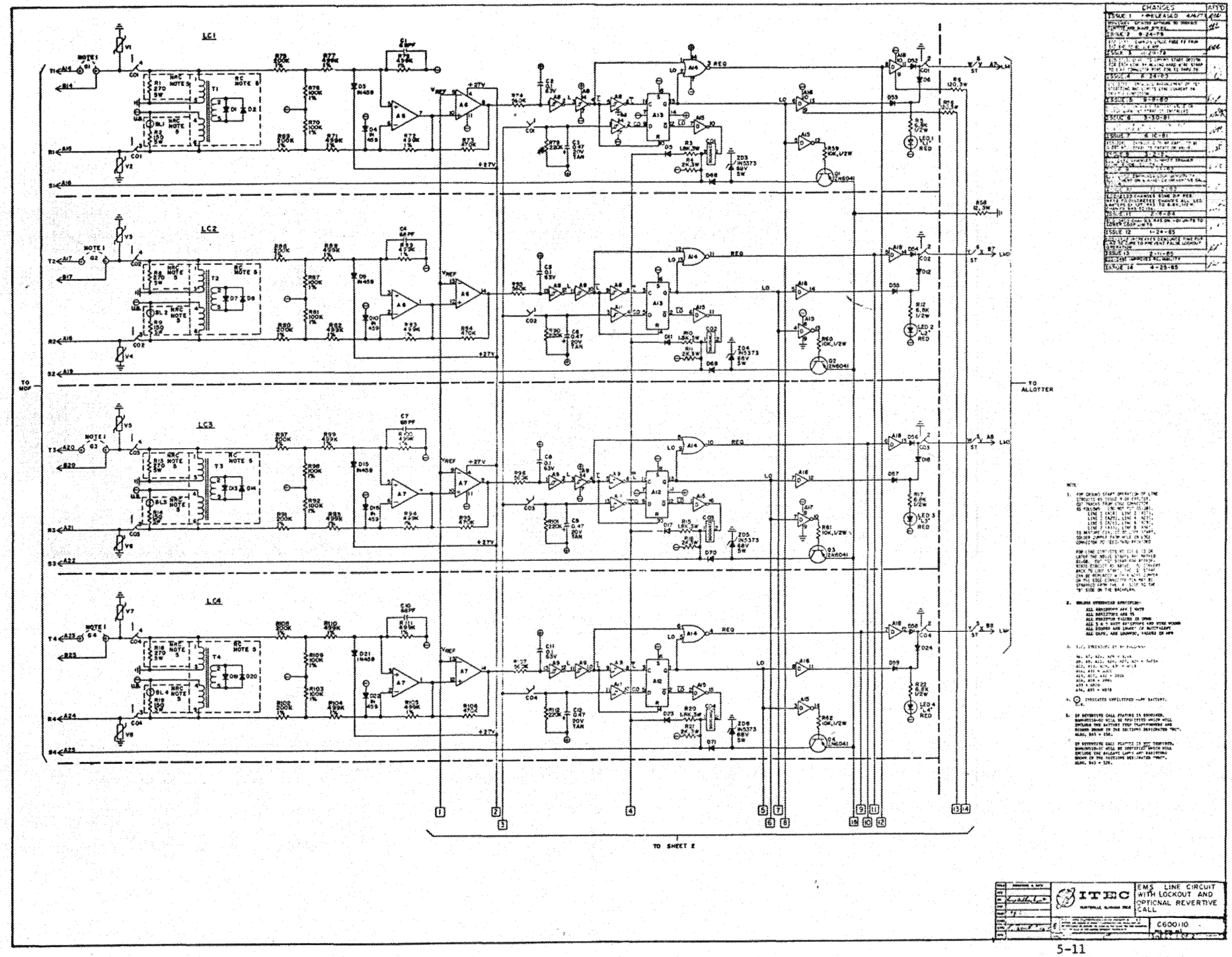

TCI Library www.telephonecollectors.info

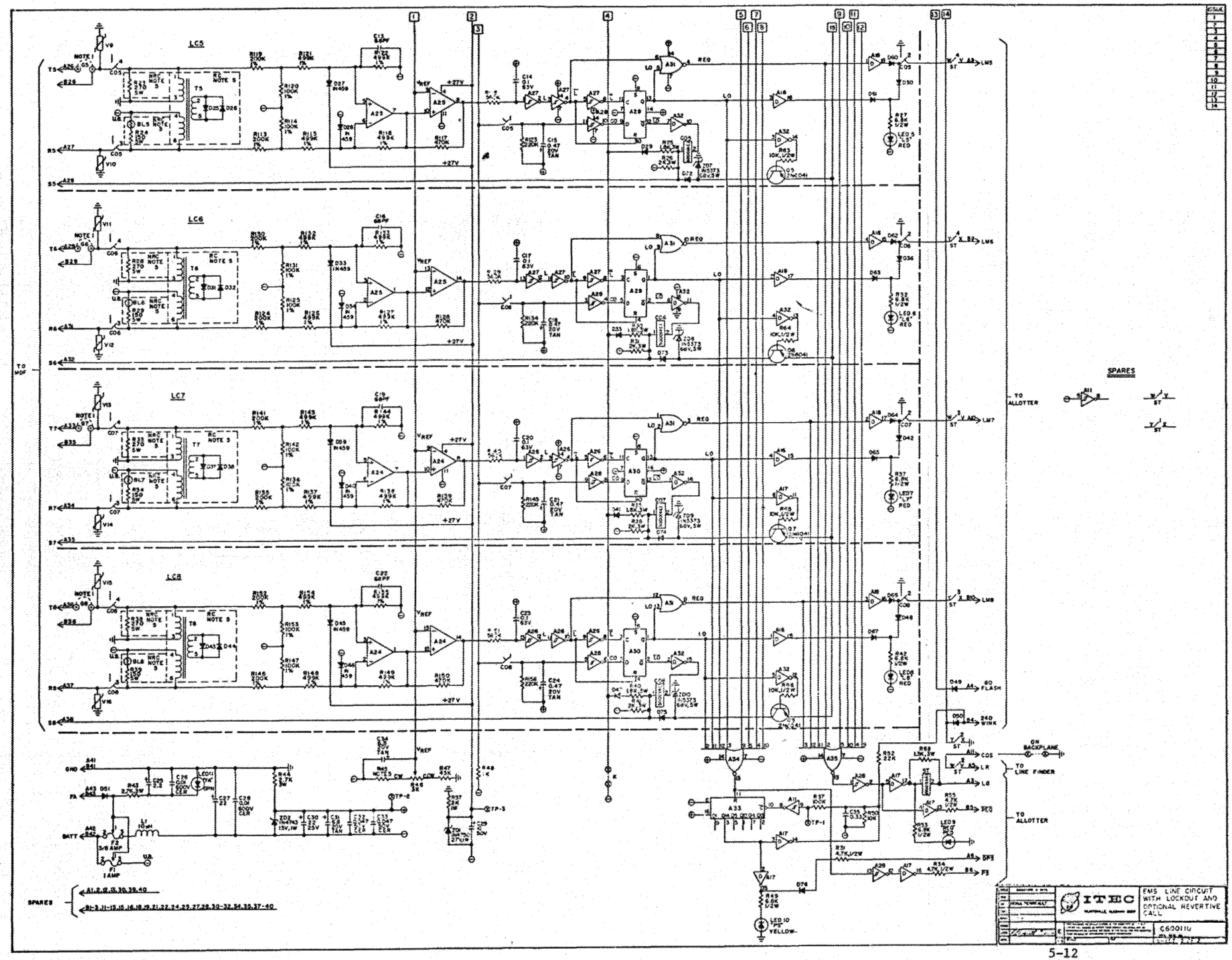

TCI Library www.telephonecollectors.info

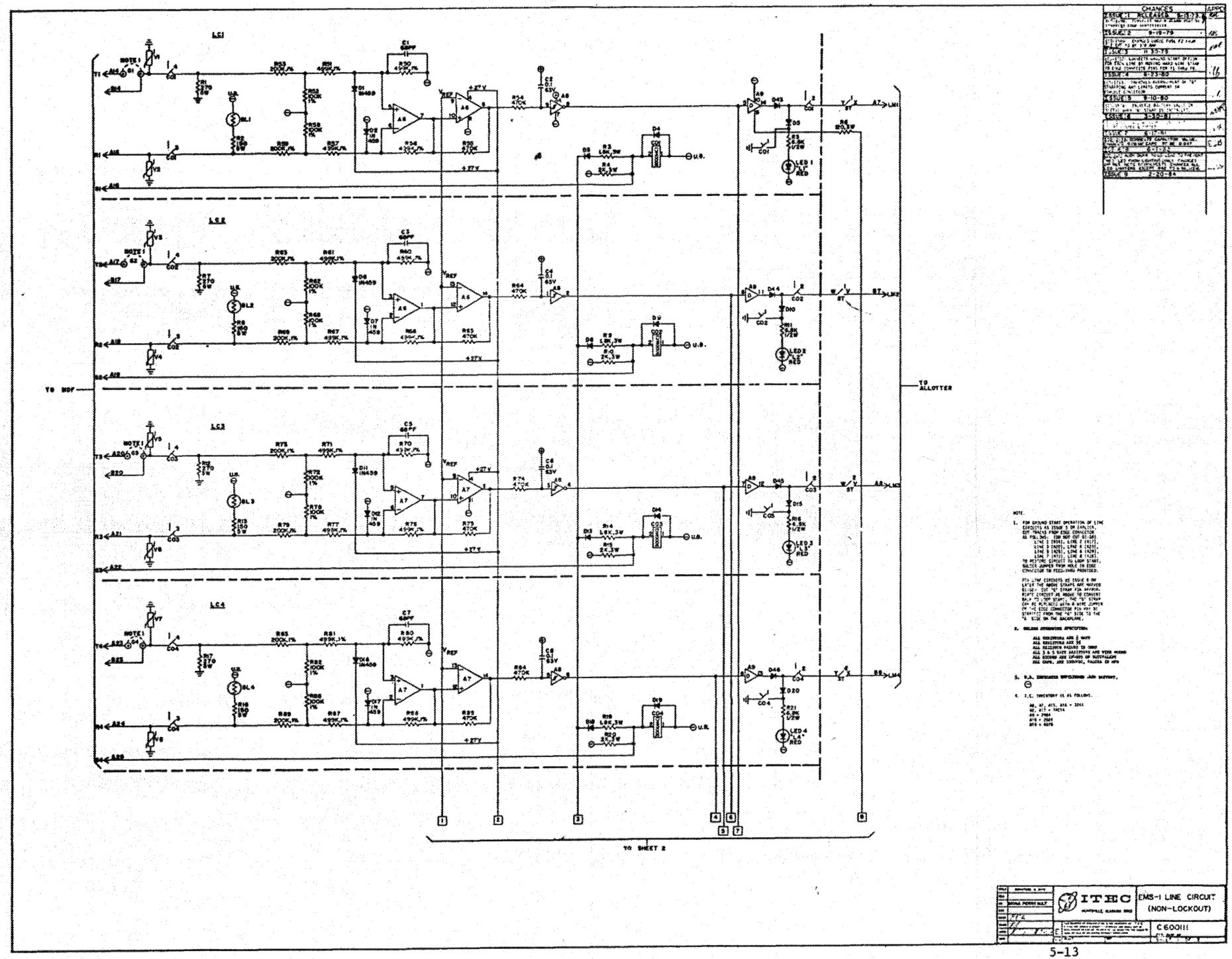

TCI Library www.telephonecollectors.info

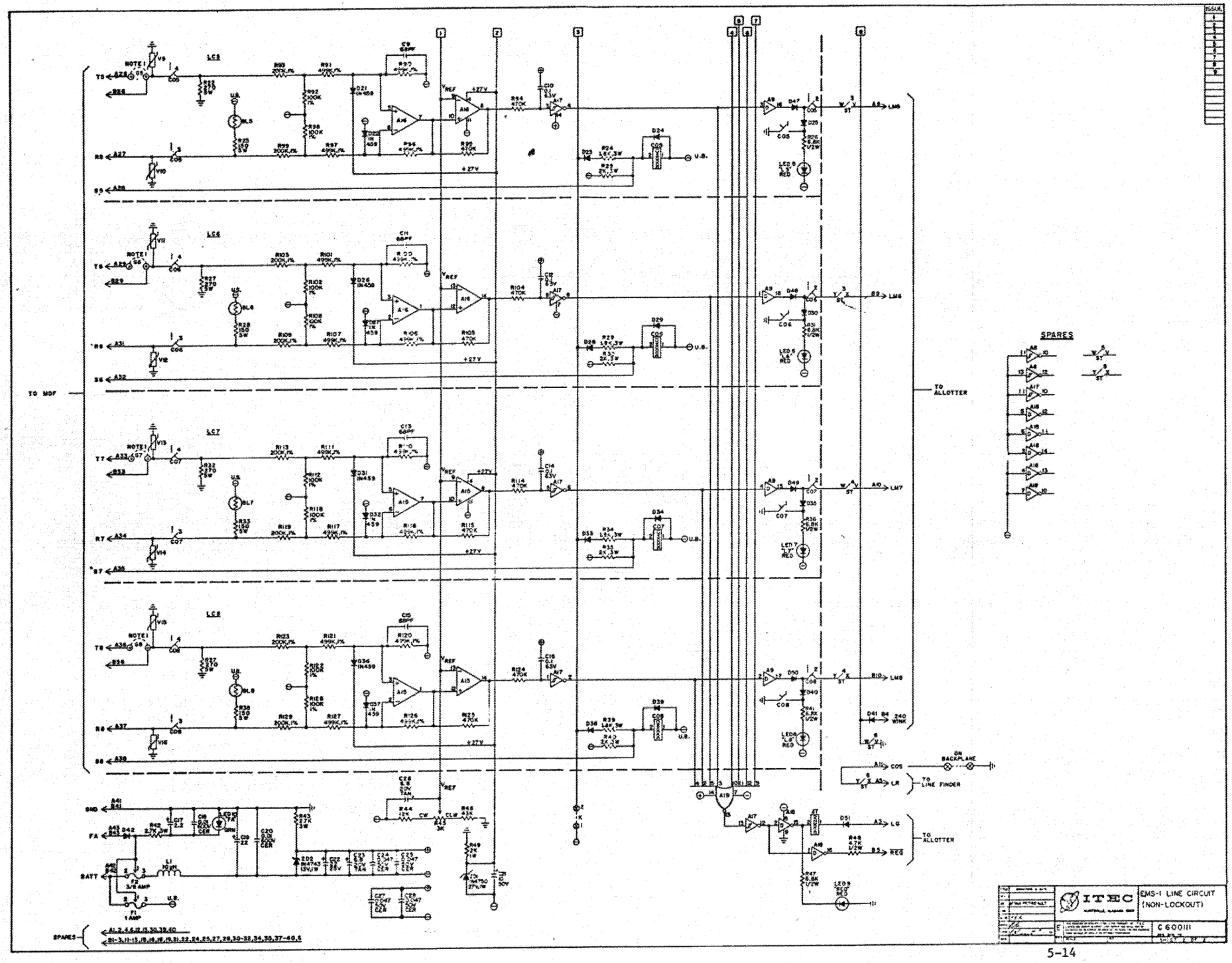

TCI Library www.telephonecollectors.info

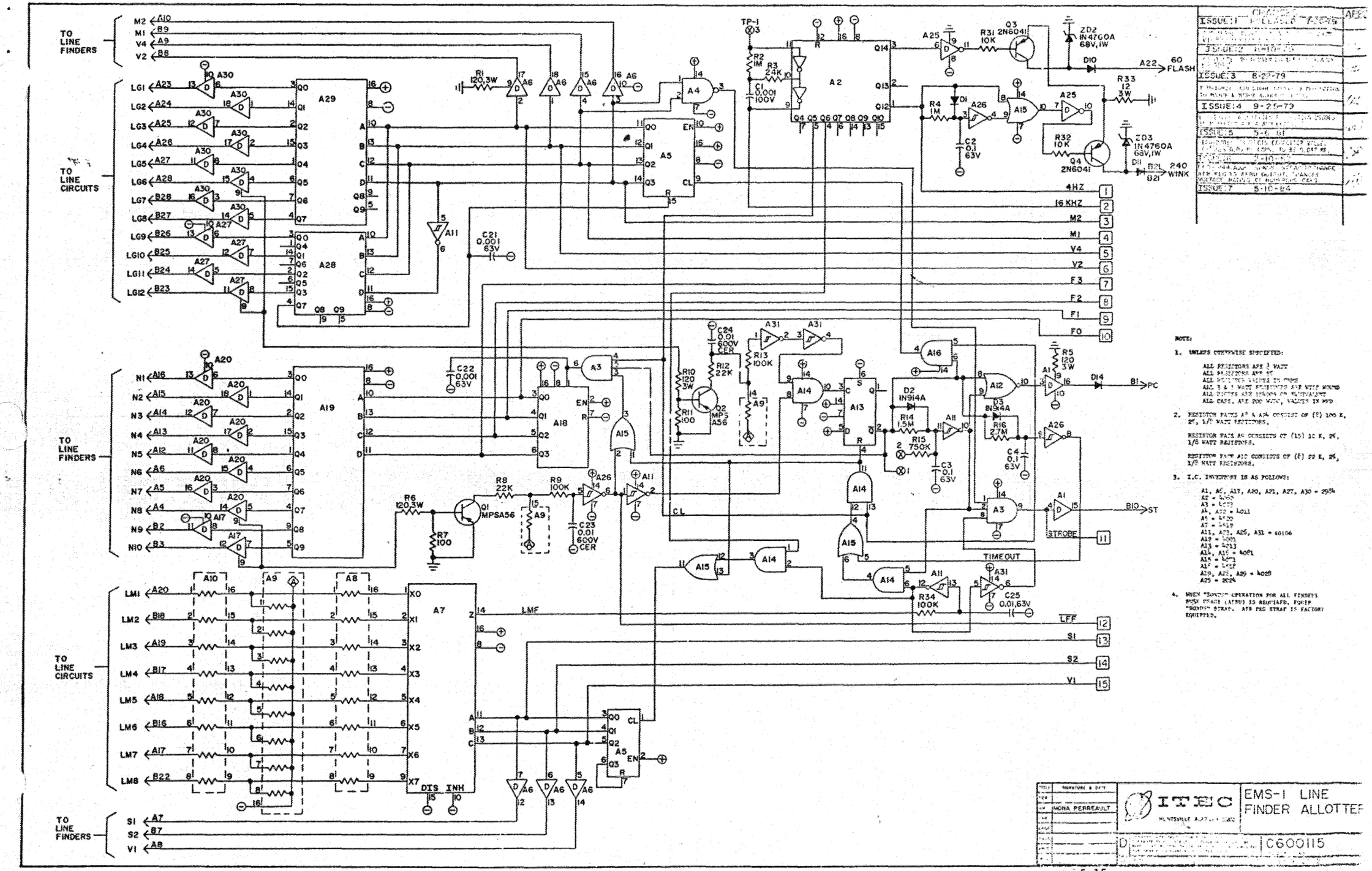

TCI Library www.telephonecollectors.info

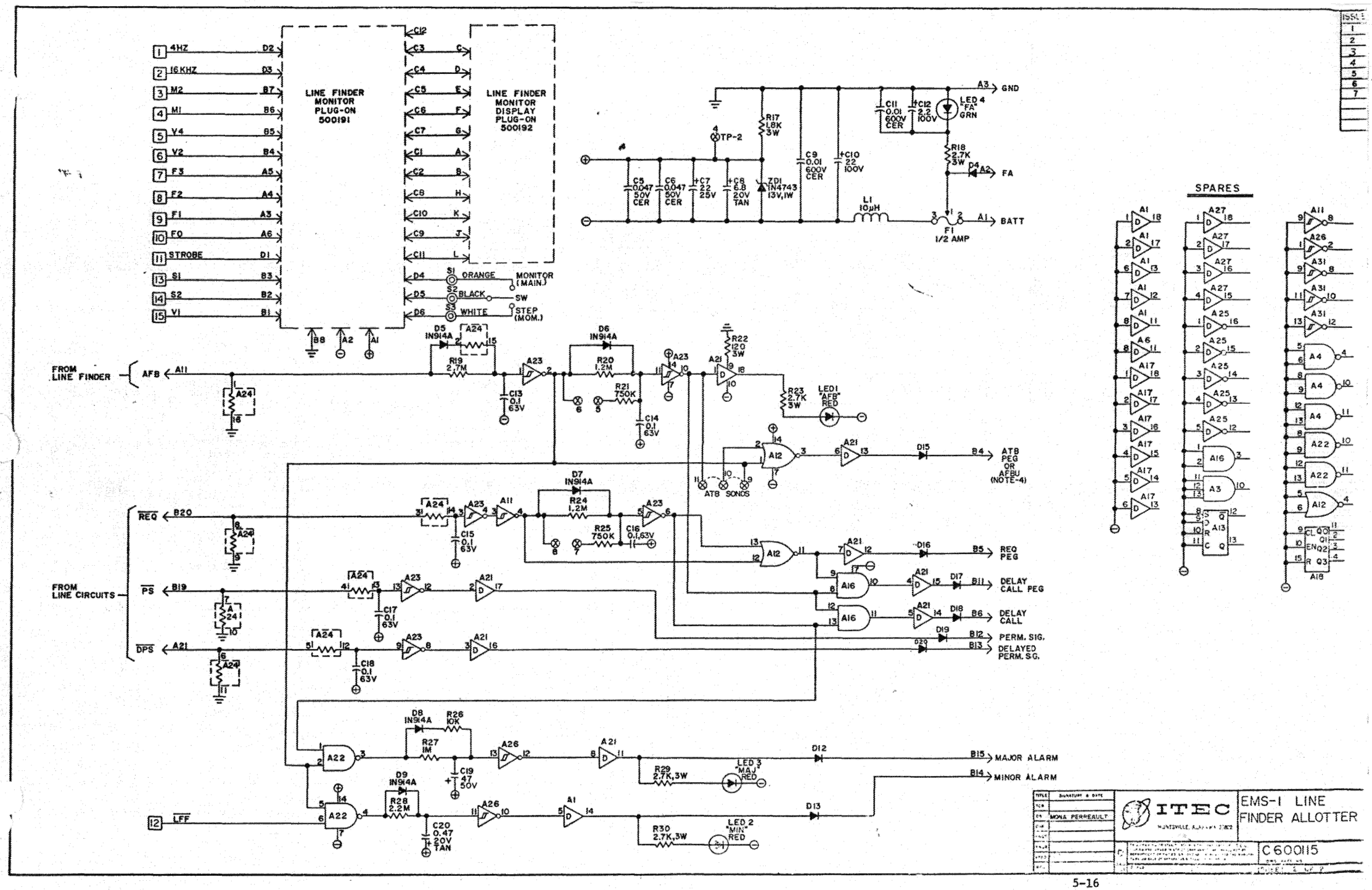

TCI Library www.telephonecollectors.info

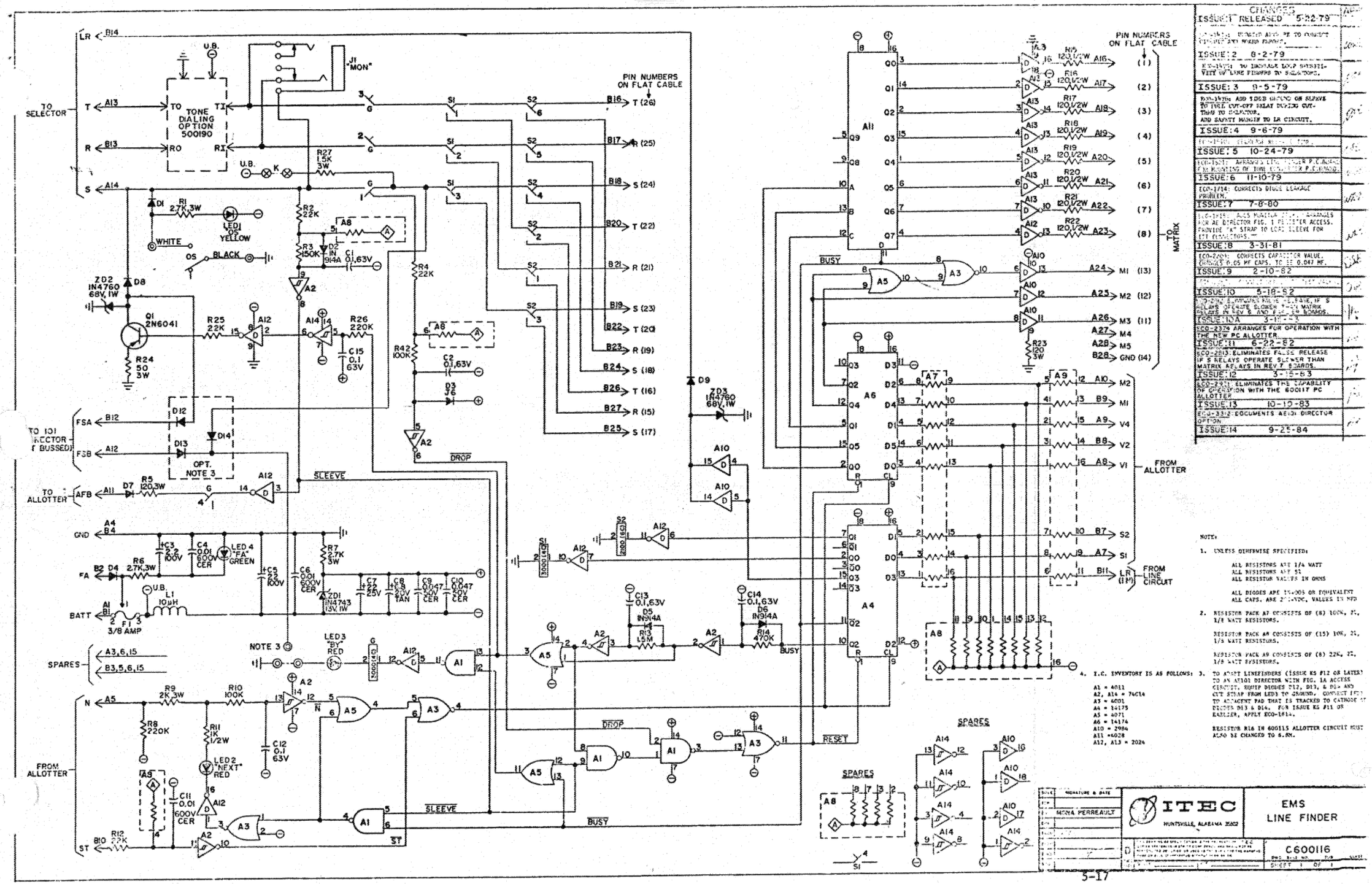

CHANGES

ISSUE:1 RELEASED 5-22-79

ISSUE:2 8-2-79

ISSUE:3 9-5-79

ISSUE:4 9-6-79

ISSUE:5 10-24-79

ISSUE:6 11-10-79

ECO-1714: CORRECTS DIODE LEAKAGE PROBLEM.

ISSUE:7 7-8-80

ISSUE:8 3-31-81

ECO-2209: CORRECTS CAPACITOR VALUE. CHANGES 0.05 MF CAPS. TO BE 0.047 MF.

ISSUE:9 2-10-82

ISSUE:10 5-18-82

ISSUE:10A 3-10-83

ECO-2374 ARRANGES FOR OPERATION WITH THE NEW PC ALLOTTER.

ISSUE:11 6-22-82

ECO-2813: ELIMINATES FALSE RELEASE IF S RELAYS OPERATE SLOWER THAN MATRIX RELAYS IN REV B BOARDS.

ISSUE:12 3-15-83

ECO-2921: ELIMINATES THE CAPABILITY OF OPERATION WITH THE 600117 PC ALLOTTER

ISSUE:13 10-10-83

ECO-3315: DOCUMENTS AE101 DIRECTOR OPTION

ISSUE:14 9-25-84

NOTE:

1. UNLESS OTHERWISE SPECIFIED:

   ALL RESISTORS ARE 1/4 WATT
   ALL RESISTORS ARE 5%
   ALL RESISTOR VALUES IN OHMS

   ALL DIODES ARE 1N4005 OR EQUIVALENT
   ALL CAPS. ARE 25 VDC, VALUES IN MFD

2. RESISTOR PACK A7 CONSISTS OF (8) 100K, 2%, 1/8 WATT RESISTORS.

   RESISTOR PACK A8 CONSISTS OF (15) 10K, 2%, 1/8 WATT RESISTORS.

   RESISTOR PACK A9 CONSISTS OF (8) 22K, 2%, 1/8 WATT RESISTORS.

3. TO ADAPT LINEFINDERS (ISSUE KS F12 OR LATER) TO AN AE101 DIRECTOR WITH FIG. 1A ACCESS CIRCUIT, EQUIP DIODES D12, D13, & D14 AND CUT STRAP FROM LED3 TO GROUND. CONNECT D12 TO ADJACENT PAD THAT IS TRACKED TO CATHODE OF DIODES D13 & D14. FOR ISSUE KS F11 OR EARLIER, APPLY ECO-1614.

   RESISTOR R16 IN 600115 ALLOTTER CIRCUIT MUST ALSO BE CHANGED TO 6.8K.

4. I.C. INVENTORY IS AS FOLLOWS:

   A1 = 4011
   A2, A14 = 74C14
   A3 = 4001
   A4 = 14175
   A5 = 4071
   A6 = 14174
   A10 = 2984
   A11 = 4028
   A12, A13 = 2024

TCI Library www.telephonecollectors.info