P.B.X. SYSTEMS
NO. 550C, 551A OR 551B
TELEPHONE AND DIAL CIRCUIT

CHANGES

B. CHANGES IN APPARATUS

B.1 Added
2-223A Jacks — Fig. 3

D. DESCRIPTION OF CIRCUIT CHANGES

D.1 Note 112 is added.

D.2 Fig. 3 is added when a second pair of attendants telephone set jacks is required in connection with Fig. A or C.

All other headings under Changes, no change.

1. PURPOSE OF CIRCUIT

1.1 This circuit is used at a 550C, 551A or 551 PBX by the attendant to listen and talk on connections established by the associated cord circuits and for dialing to Panel or Step-by-Step Dial Central Offices.

2. WORKING LIMITS

2.1 None.

3. FUNCTIONS

3.1 Attendant talking and listening.

3.2 Dialing called number to dial central offices.

3.3 Arranged to prevent false pulses to panel central offices.

3.4 Arranged to prevent clicks to the attendant on operation and release of "Talk and Dial" keys.

4. CONNECTING CIRCUITS

4.1 No. 550C, 551A or 551B PBX Cord Circuit.

4.2 No. 550C, 551A or 551B PBX Auxiliary Signal and Battery cut-off key circuit.

DESCRIPTION OF OPERATION

5. TALKING AND LISTENING ON CONNECTIONS

When the plug of the attendant's telephone set is inserted in the jacks associated with this circuit and the "talk and dial key" is operated in the cord circuit, the attendant's telephone set is bridged across the tip and ring of the cord. This enables the attendant to talk or listen on connections established by the cord circuit.

It will be noted that the receiver circuit is closed last on the operation of a "talk and dial key", this prevents a click to the attendant on the operation and release of the "Talk and Dial Key".

6. DIALING CALLED NUMBER TO STEP-BY-STEP OR PANEL DIAL OFFICES

When the "talk and dial key" of the cord circuit is operated and the dial tone received, the dial is moved off-normal. Relay (H) operates on the off-normal contact of the dial through its primary winding. Relay (H) operated, disconnects the ring of the attendant's telephone circuit from the cord, operates relay (D) and connects resistance (R) in parallel with the 54B retardation coil. Relay (D) operated, disconnects the ring of the attendant's telephone circuit from the repeating coil, short-circuits the 54B retardation coil, connects ground to the secondary winding of relay (H), and operates relay (F). Relay (F) operated, disconnects the tip and ring of the rear cord circuit from the tip and ring of the front cord circuit and connects the tip and ring of the rear cord to the repeating coil and relay (B). Should the receiver be off the switchhook at the calling station, relay (B) operates through the cord circuit and the station loop, otherwise it will operate through the holding bridge in the

TCI Library: www.telephonecollectors.info

cord circuit. Relay (F) is then locked operated under the control of relay (B).

When the dial returns to normal, relays (D) and (H) release. Relay (H) is sufficiently slow in releasing to hold resistance (R) in parallel with the 54B retardation coil until the current in that coil is partly built up. This prevents a false pulse at the end of each digit when dialing. Relay (D) released, connects the 54B retardation coil across the tip and ring of the front cord and connects the ring of the attendant's telephone circuit to the repeating coil. Relay (H) released, connects the ring to the front cord. Relays (F) and (B) remain operated under control of the talk and dial key of the cord circuit until the dialing is completed. When the talk and dial key is released relays (F) and (B) release and restore the circuit to normal.

7. CLICK REDUCTION

The varistor is provided to reduce the intensity of clicks in the receiver. With normal talking voltage the resistance of the varistor is very high, but on an increase of voltage the resistance is reduced to a very low value which reduces the intensity of the clicks heard in the receiver.

8. FIG. 3

This figure provides a second pair of telephone jacks which may be used in connection with Fig. A or C. With this figure two operators may be connected at the same time.

TCI Library: www.telephonecollectors.info

P.B.X. NO. 550-C, 551-A OR 551-B TELEPHONE AND DIAL CIRCUIT

DWG. ISSUE	C.D. ISSUE
6	4
7	5
8	6
9	7
10	10
11	11

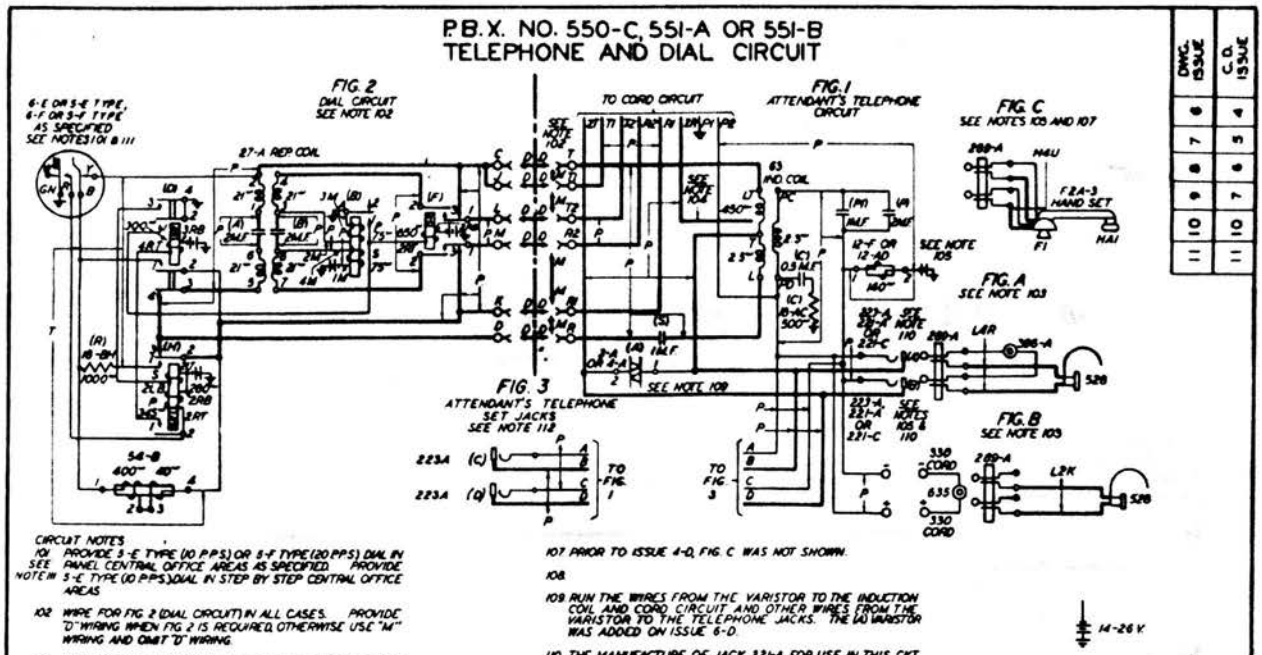

CIRCUIT NOTES

101 PROVIDE 5-E TYPE (10 P.P.S.) OR 5-F TYPE (20 P.P.S.) DIAL IN SEE PANEL CENTRAL OFFICE AREAS AS SPECIFIED. PROVIDE NOTE III 5-E TYPE (10 P.P.S.) DIAL IN STEP BY STEP CENTRAL OFFICE AREAS.

102 WIRE FOR FIG. 2 (DIAL CIRCUIT) IN ALL CASES. PROVIDE "D" WIRING WHEN FIG. 2 IS REQUIRED, OTHERWISE USE "M" WIRING AND OMIT "D" WIRING.

103 PROVIDE FIG. A WHEN CHEST TRANSMITTER IS SPECIFIED. PROVIDE FIG. B WHEN TRANSMITTER ARM IS SPECIFIED. PROVIDE FIG. C WHEN HAND SET IS SPECIFIED.

104 "ZR" LEAD SHALL BE DEAD-ENDED AT POSITION OF IND. COIL.

105 PRIOR TO ISSUE 3-Q, THE OPTIONAL USE OF THE 12-AD RET. COIL AND THE 221-A JACKS WAS NOT SHOWN.

106

107 PRIOR TO ISSUE 4-Q, FIG. C WAS NOT SHOWN.

108

109 RUN THE WIRES FROM THE VARISTOR TO THE INDUCTION COIL AND CORD CIRCUIT AND OTHER WIRES FROM THE VARISTOR TO THE TELEPHONE JACKS. THE (A) VARISTOR WAS ADDED ON ISSUE 6-D.

110 THE MANUFACTURE OF JACK 221-A FOR USE IN THIS CKT. HAS BEEN DISCONTINUED. JACK 221-A IS SUPERSEDED BY JACK 223-A ON ISSUE 6-D OF THIS CKT. PRIOR TO ISSUE 6-D THE 223-A JACK WAS NOT SHOWN.

111 THE USE OF THE 5-E AND 5-F TYPE DIALS IS RATED "W.F.R. DISC" AND IS SUPERSEDED BY THE 6-E AND 6-F DIALS RESPECTIVELY ON ISSUE 10D. PRIOR TO ISSUE 10D, THE 6-E AND 6-F DIALS WERE NOT SHOWN.

112 PROVIDE FIG. 3 WHEN A SECOND PAIR OF ATTENDANT'S JACKS IS REQUIRED IN CONNECTION WITH FIG. A OR C. PRIOR TO ISSUE 11D, FIG. 3 WAS NOT SHOWN.

P. B. X. NO. 550-C, 551-A OR 551-B TELEPHONE AND DIAL CIRCUIT

DWG. ISSUE	C.D. ISSUE
6	4
7	5
8	6
9	7
10	10
11	11

TRANSMISSION TEST REQUIREMENTS (1000 CYCLE LOSS BETWEEN 600 ohm LINES)

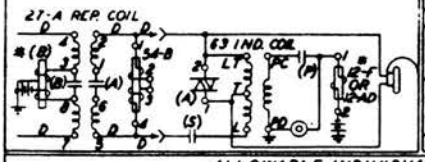

MAX. ALLOWABLE CIRCUIT LOSS (db)

		BRIDG.	TRANS.
WITHOUT (A) VARISTOR	WITH "D" WIRING	2.4	12.6
	WITHOUT "D" WIRING	2.3	11.2
WITH (A) VARISTOR	WITH "D" WIRING	2.7	12.6
	WITHOUT "D" WIRING	2.5	11.2

ALLOWABLE INDIVIDUAL APPARATUS LOSSES (db)

APPARATUS	DESIG.	CODE	MAX. LOSS	MIN LOSS	REMARKS
CONDENSER	A OR B	2 M.F.	14.5	11.5	
CONDENSER	P	3 M.F.	17.9	14.9	
CONDENSER	S	1 M.F.	8.9	6.3	
INDUCTION COIL		63	11.6	10.6	
REPEATING COIL		27-A	0.9		
RETARDATION COIL		54-B	0.1		
VARISTOR	A	3-A OR 4-A			SEE NOTE 1

NOTES:

1. FOR METHOD OF MAKING INDIVIDUAL APPARATUS LOSS TEST, SEE BSP IN "K" SERIES.

REQUIREMENTS USING 1A ATTENUATOR:

ROOM TEMPERATURE	70°	80°	90°	100°	105°
INDIVIDUAL LOSS	1.7	2.3	3.1	3.9	4.4

REQUIREMENTS USING 12 db PAD:

ROOM TEMPERATURE	70°*	80°	90°	100°	105°
INDIVIDUAL LOSS	2.1	2.7	3.4	4.1	4.5

LOSSES FOR TEMPERATURES OTHER THAN THOSE LISTED ABOVE MAY BE DETERMINED BY INTERPOLATION.

* INDICATES APPARATUS FOR WHICH INDIVIDUAL LOSSES ARE NOT REQUIRED.

TCI Library: www.telephonecollectors.info

CIRCUIT REQUIREMENTS

NO. 550-C 551-A OR 551-B P.B.X. TELEPHONE AND DIAL CIRCUIT (TEL AND D)

APPARATUS		MECH. REQ.			CIRCUIT PREPARATION				TEST SET PREP	SEE TEST NOTE NO.	DIRECT CURRENT FLOW REQ					REMARKS
DESIG	CODE	BSP FIG	CONT PRESS	ARM TRVL	SEQ SW POS	BLOCK	TEST CLIP DATA CONN. BAT.	TEST CLIP DATA CONN. GRD			TEST MDG	TEST FOR	AFTER SOAK AMP	TEST AMP	READJ AMP	
RELAYS																
B	G1	3		.040		(F) NO	2T (F)	2B (F)	M		P/S	O		.0105	.010	
						(F) NO	2T (F)	2B (F)	M		P/S	R		.0047	.005	
D	R189	11/10	H	.015		(H) NO		RT (D)	GRD.			O		.033	.031	
F	R190	14/14	H	.035		(B) NO		RT (F)	GRD.			O		.016	.015	
H	R188	3/1	H	.020				RT (H)	GRD.		P	O		.027	.025	INSULATE 1B (H).
								LB (H)	GRD.	1	S	H		.026	.0245	

TEST NOTES:

1. WHEN TESTING AND READJUSTING, OPERATE RELAY THRU PRIMARY WINDING BY CONNECTING DIRECT GROUND TO 2B(H) APPLY HOLD CURRENT TO SECONDARY WINDING AND THEN OPEN THE PRIMARY CIRCUIT.

CKT. ISS. NO.: 4, 5, 6, 7, 8, 9, 10, 11

TCI Library: www.telephonecollectors.info