# LORAIN

## *Products Corporation*

LORAIN RINGING
AND
TONE POWER PLANT
MODEL NRT5
SPEC NO. 5715-004 SERIAL NO. 165

# instructions

INSTALLATION
OPERATION
MAINTENANCE

DESIGNERS AND MANUFACTURERS OF

*power equipment without moving parts* SUB-CYCLE® AND FLOTROL

INSTRUCTIONS
MODEL NRT5 RINGING AND TONE POWER PLANT
SPEC. 5715-004 L1 AND 5715-004 L2
SD-2903-01

1. DESCRIPTION, RATINGS

a. General

Model NRT5 Ringing and Tone Power Plant operates from 46 to 52 volt d-c. It furnishes ringing current, tone current, interrupted tone signals, and ground pulse signals. Each ground pulse signal can be connected either to operate an interruption relay, or to light an indicator lamp as a flash signal.

Model NRT5 Ringing and Tone Power Plant per Spec. 5715-004 L1 consists of:

| Qty | Description |
|---|---|
| 1 | Model TB20R SUB-CYCLE Ringing Generator Spec. 5153-311 |
| 1 | Model F4A Tone Generator Spec. 5114-002 |
| 1 | NA Interrupter Spec. 5871-003 L1 |

Model NRT5 Ringing Tone Power Plant per Spec. 5715-004 L2 consists of the apparatus and wiring required in addition to the NA Interrupter Spec. 5871-302 L1 to obtain an additional 30 IPM ground pulse output.

b. Ringing Output

Model TB20R SUB-CYCLE Ringing Generator, furnished as part of Model NRT5, supplies 20 Hz ringing current. Ringing generator output voltage is adjustable for 85 volt, 95 volt or 110 volt output. The ringing current is interrupted by a Lorain Type NA Interrupter to furnish four consecutive one second ringing signals during each four second cycle.

c. Tone Output

A Lorain Model F4A Tone Generator furnishes 600 Hz tone current modulated at 120 Hz. Tone current is supplied as continuous dial tone signal, and interrupted at 60 IPM and 120 IPM rates as two types of busy signal. Total output power rating of a Model F4A Tone Generator is 100 milliwatts.

d. Ground Pulse Output

60 IPM and 120 IPM ground pulse signals are supplied by the Lorain Type NA Interrupters, Spec. 5871-302 L1. (An additional 30 IPM ground

1. d. (continued)

pulse output is available only if Lorain NA Interrupter, Spec. 5872-302 L2 apparatus is furnished in addition to the Interrupter.) These ground pulse signals can be connected to operate interruption relays or to light lamps as flash signals.

2. INSTALLATION

a. Mounting

Model TB20R SUB-CYCLE Ringing Generator and Lorain Type NA Interrupter which make up the NRT5 Ringing and Tone Power Plant are fastened together, one above the other, with two unit mounting strips. The complete unit can then be mounted in an existing twenty-three inch relay rack. Refer to Equipment and Assembly Drawing J5715-004 for equipment arrangement and mounting details.

b. Preliminary Adjustment

Refer to instructions of the associated equipment in this Ringing and Tone Power Plant for the adjustment of the individual equipment.

c. Electrical Connections

An interpanel wiring harness is already installed to make necessary connections between the Tone Generator, Ringing Generator and Interrupter. All installer connections are to be made to the terminal block at the rear of the Interrupter, as indicated on drawing T-2903-11.

3. OPERATION

Operation of Model F4A Tone Generator, Model TB20R SUB-CYCLE Ringing Generator and Type NA Interrupter are described in the instructions of these individual units.

LORAIN PRODUCTS CORPORATION
Lorain, Ohio, U.S.A.

LORAIN PRODUCTS (CANADA) LTD.
St. Thomas, Ontario, Canada

Form 1863 August 12, 1969 Printed in U.S.A.

42

[illegible]

| [illegible] | [illegible] | [illegible] | [illegible] |
|---|---|---|---|
| [illegible] | | | |
| [illegible] | [illegible] | [illegible] | [illegible] |
| [illegible] | [illegible] | [illegible] | [illegible] |
| [illegible] | [illegible] | [illegible] | [illegible] |
| [illegible] | [illegible] | [illegible] | [illegible] |

[illegible]

[illegible]
[illegible]
[illegible]

[illegible]

FIG I

RINGING AND TONE SUPPLY CKT

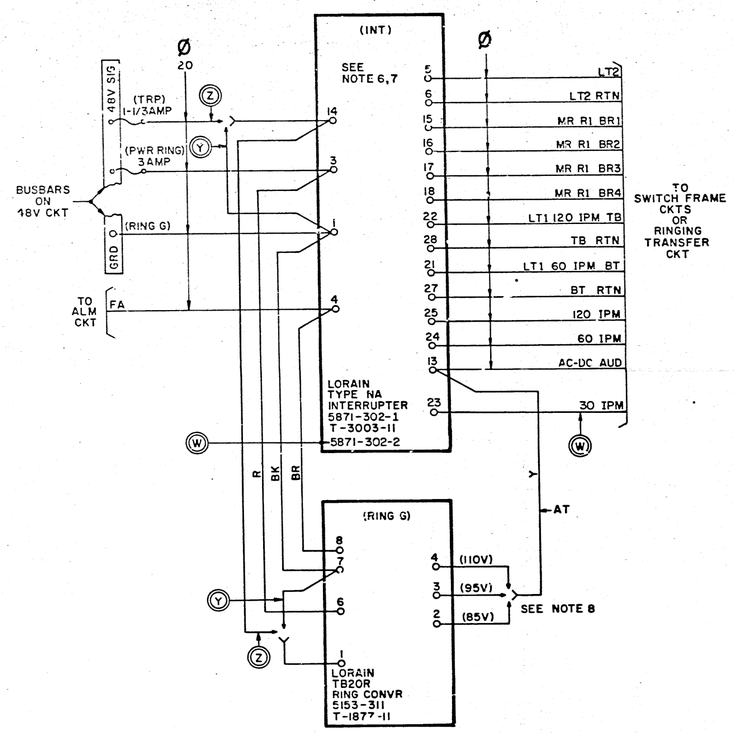


| | |
|---|---|
| POWER RINGING CIRCUIT | T-2903-11 |
| LORAIN PRODUCTS CORPORATION — DWG SIZE D | 2 SHEETS — SHEET 2 |

PRINTED IN U.S.A.

SHEET 2

| TABLE A | | | | | | | | |
|---|---|---|---|---|---|---|---|---|
| SD-T DWG CROSS REFERENCE & FIGURE LOCATION TABLE | | | | | | | | |
| ITEMS IN PARENTHESES ARE FOR INFORMATION ONLY AND ARE NOT TO BE RECORDED ON JOB WIRING LIST DRAWING | | | | | | | | |
| LINE | SD-2903-01 | | | T-2903-11 | | | | REMARKS |
| | SHEET | FIG | OPT | FIG | WRG | APP | SHEET | |
| 1 | 2 | 1 | Z,Y | 1 | Z,Y | | 2 | |
| | | | W | | W | W | | |
| | | | | | | | | |
| | | | | | | | | |
| 5 | | | | | | | | |
| | | | | | | | | |
| | | | | | | | | |
| | | | | | | | | |
| | | | | | | | | |
| 10 | | | | | | | | |
| | | | | | | | | |
| | | | | | | | | |
| | | | | | | | | |
| 15 | | | | | | | | |
| | | | | | | | | |
| | | | | | | | | |

| TABLE B | | | | | | | | |
|---|---|---|---|---|---|---|---|---|
| RECORD OF FIGURES, APPARATUS AND WIRING CHANGES | | | | | | | | |
| CHANGED ON ISSUE | IF OFFICE RECORDS | | THIS OPTION WAS FURNISHED | SEE ENG NOTE | RATING | | | |
| | SPECIFY | DO NOT SPECIFY | | | STD | A&M | MD | SPL |
| 2 | | W | NONE | | | | | |
| | | | | | | | | |
| | | | | | | | | |
| | | | | | | | | |

| TABLE D | | | |
|---|---|---|---|
| FUSE REQUIREMENTS | | | |
| ITEM NO. | FIG | FUSE | REMARKS |
| 1 | 1 | 3 AMP NEG 48V SIG | 1 PER INT |
| | | GRD ON 48V FUSE PNL | |
| 2 | 1 | 1-1/3 AMP 48V SIG | 1 PER INT WHEN "Z" WRG IS SPEC'D |
| | | | |
| | | | |
| | | | |

| TABLE C | | | | | | | | | |
|---|---|---|---|---|---|---|---|---|---|
| FEATURE TABLE | | | | | | | | | |
| ITEM | FEATURE | | | SPECIFY T-2903-11 | | | | AUTOMATIC | REMARKS |
| | | | | FIG | QUAN | WRG | APP | | |
| 1 | COMMON FEATURES | POWER RINGING CIRCUIT USING 0.15 AMP 20 CYCLE RINGING GENERATOR, 100 MILLI-WATT DIAL TONE GENERATOR, WITH INTERRUPTER ARRANGED TO PROVIDE 4 BRUSH DISTRIBUTION OF RING 1, 60 & 120 IPM TONE AND GROUND PULSES | | 1 | 1 | | | | |
| 2 | | OFFICE REQUIRES | BATTERY CONNECTED GENERATOR | | | Z | | | |
| | | | GROUND CONNECTED GENERATOR | | | Y | | | |
| 3 | | 30 IPM GROUND PULSE OUTPUT | | | | W | | | |
| | | | | | | | | | |

ENGINEERING NOTES

51. THIS DRAWING AGREES WITH

| | | | |
|---|---|---|---|
| SD-2903-01 | ISSUE | 1 | 2 |

52. EQUIPMENT ARRANGEMENT PER J5715-004

53. CONNECTING DRAWINGS:
T-3003-11 INTERRUPTER CKT
T-1877-11 RINGING GENERATOR CKT
SD-1716-02 TONE GENERATOR CKT

| SHOP | INST | MANUFACTURING NOTES |
|---|---|---|
| X | | 1. COLOR CODED LEADS TO BE 20 GA EXCEPT AS NOTED. |
| X | X | 2. AT-LEADS CONNECTED AFTER TEST BY INSTALLER. FURNISH I.P-384 TAGS FOR THESE LEADS. |
| X | | 3. D-WIRING NOT INCLUDED IN LOCAL CABLE FORM BUT RUN AS SEPARATE LEADS. |
| | | 4. Ø-LEADS RUN BY INSTALLER. |
| | | 5. RESERVED |
| X | | 6. ADJUST DIAL TONE VOLTAGE IN ACCORDANCE WITH OFFICE REQUIREMENTS AND SD-1716-02, TABLE A. |
| X | | 7. ADJUST 60 & 120 IPM TONE VOLTAGE IN ACCORDANCE WITH T-3003-11, TABLE D. |
| X | | 8. SELECT RINGING GENERATOR OUTPUT VOLTAGE BY CONNECTING (AC-DC AUD) LEAD TO TERM 2,3 OR 4 ON RINGING GENERATOR FOR 85V, 95V OR 110V OUTPUT, RESPECTIVELY. |

| | | | |
|---|---|---|---|
| | | | 11-11-64 |
| | | M | 1 |
| "W" WRG & APP ADDED. DIAL TONE LEAD WAS DESIG "LT1" CN 19030 | | | 6-17-69 |
| H.S.S. | E. Johnson 6-17-69 | R. Caulk 6-21-69 | 2 |

INFORMATION NOTES

101. UNLESS OTHERWISE SPECIFIED, RESISTANCE VALUES ARE IN OHMS, CAPACITANCE VALUES ARE IN MICROFARADS.

102. LEAD AND EQUIPMENT DESIGNATIONS FOLLOWED BY A DASH (-) INDICATE CKT AND EQUIPMENT NUMBERING: 1 FOR 1ST (FIGURE, CKT OR EQPT), 2 FOR 2ND, ETC.

103. GROUND AND FUSED BATTERY LEADS IN TABLE D TO BE PROVIDED BY TEL. CO.



ISSUE 2

T-2903-11
POWER SYSTEMS

RINGING CIRCUIT
0.15 AMPERE RINGING SUPPLY

SOLID STATE RINGING AND TONE GENERATOR
SOLID STATE INTERRUPTER

NRTS RINGING AND TONE POWER PLANT
5715-004

| | | |
|---|---|---|
| DRAWN BY G.S. | DATE 11-11-64 | |
| CHECKED BY | DATE | |
| APPROVED BY G. Gunther | DATE 11-12-64 | |
| APPROVED BY | DATE 11-23-64 | |
| RATING STANDARD | | |
| T-2903-11 | | |

LORAIN PRODUCTS CORPORATION
LORAIN, OHIO
LORAIN PRODUCTS (CANADA) LTD., ST. THOMAS, ONTARIO

DWG SIZE D | 2 SHEETS | SHEET 1

PRINTED IN U.S.A.

# FIG 1

RINGING AND TONE SUPPLY CKT

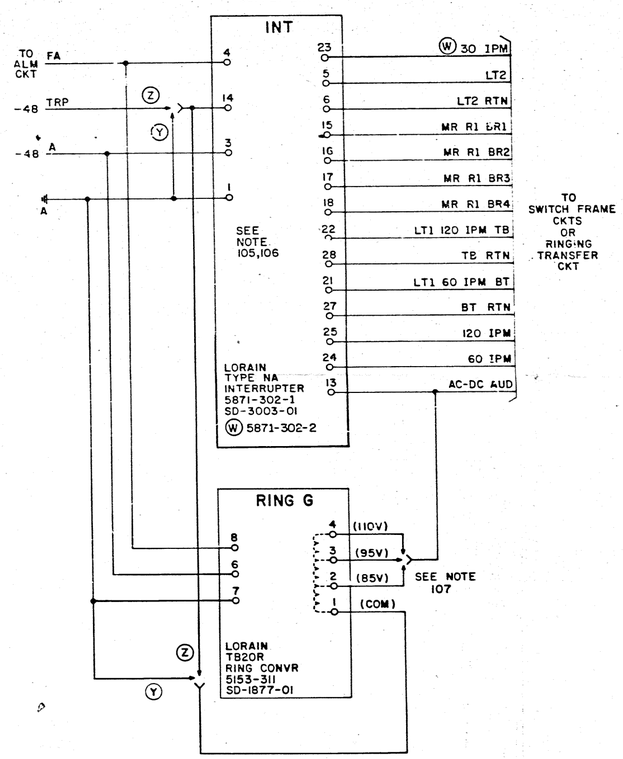


| | | |
|---|---|---|
| POWER RINGING CIRCUIT | | SD-2903-01 |
| LORAIN PRODUCTS CORPORATION | DWG SIZE D | 2 SHEETS / SHEET 2 |

PRINTED IN U.S.A.

ISSUE 2

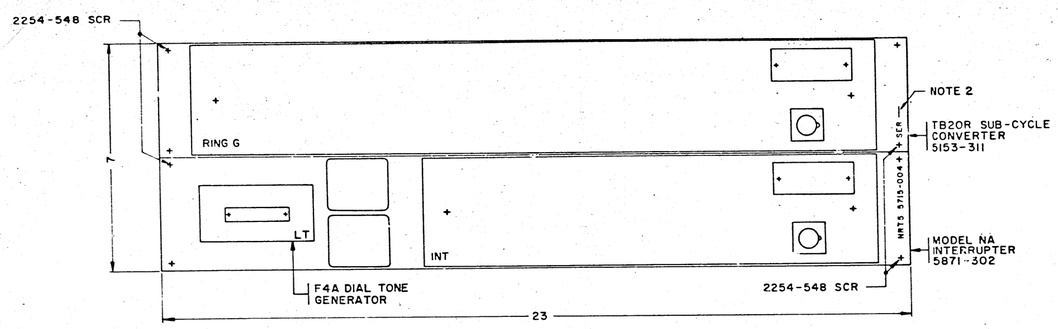


FRONT VIEW

FIG 1

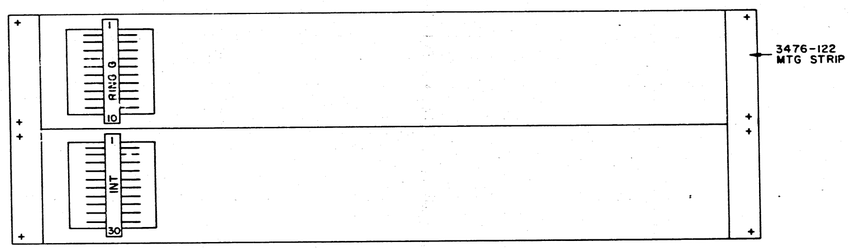


REAR VIEW

FIG 2

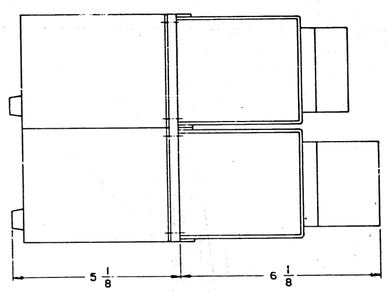


END VIEW

FIG 3

TABLE A

| COL | A | B | C | D | E | F | G | H |
|---|---|---|---|---|---|---|---|---|
| | EQUIPMENT | RATING | LIST | NO | CIRCUITS & FIGURES EQUIPPED: CIRCUIT | FIG | WRG | APP |
| | EQUIPMENT, ASSEMBLY AND WIRING FOR NRT5 RINGING AND TONE POWER PLANT USING 0.15 AMP 20 CYCLE RINGING GENERATOR, 100 MILLIWATT DIAL TONE GENERATOR, ARRANGED FOR 4 BRUSH DISTRIBUTION OF RING 1, 60 & 120 IPM TONE AND GROUND PULSES. | | 1 | 1 | T-2903-11 | 1 | | |
| | APPARATUS AND WIRING REQD IN ADDITION TO L-1 FOR 30 IPM GROUND PULSE OUTPUT | | 2 | | T-2903-11 | | W | W |

ENGINEERING NOTES

51. EQUIPMENT SHALL BE ORDERED IN ACCORDANCE WITH TABLE A.

52. DRAWING NO. AND PART NO. ARE IDENTICAL WHERE 7 DIGIT (0000-000) PART NUMBERS ARE SHOWN.

| L-2 | L-1 | PART NO | DWG OR CODE NO | DESCRIPTION | NOTE | LINE |
|---|---|---|---|---|---|---|
| | 4 | | 2254-548 | SCR, PAN HD 12-24 X 5/16 | | |
| | 2 | | 3476-122 | MTG STRIP | | |
| | 1 | | 5153-311 | SUB-CYCLE CONVR, TB20R | | |
| 1 | | | 5871-302-2 | INTERRUPTER COMPONENTS | | |
| | 1 | | 5114-003 | DIAL TONE GENERATOR, F4A | | |
| | 1 | | 5871-302-1 | INTERRUPTER, MODEL NA | | |

STOCKLIST

| SHOP | INST | MANUFACTURING NOTES | SHOP | INST | MANUFACTURING NOTES |
|---|---|---|---|---|---|
| X | | 1. STAMP EQUIPMENT DESIGNATIONS ON FRONT & REAR, AND UNDER COVERS ON FRONT. | | | |
| X | | 2. STAMP MODEL & SERIAL NO ON FRONT ONLY, AS SHOWN. | | | |

| | | | |
|---|---|---|---|
| | | M | 1 |
| LIST 2 ADDED CN 19030 | | M | 6-17-69 |
| RED | D. Johnson 6-17-69 | R. Gaulke 6-24-69 | 2 |

10-29-64



ISSUE 2

J5715-004

POWER SYSTEMS

SPECIFICATION FOR EQUIPMENT AND ASSEMBLY 0.15 AMPERE RINGING SUPPLY

SOLID STATE RINGING AND TONE GENERATOR
SOLID STATE INTERRUPTER

NRT5 RINGING AND TONE POWER PLANT

| | | |
|---|---|---|
| DRAWN BY G.S. | DATE 10-29-64 | |
| CHECKED BY | DATE | |
| APPROVED BY R. Gaulke | DATE 11-2-64 | |
| APPROVED BY E. Wilmoth | DATE 11-23-64 | |
| RATING STANDARD | | |

LORAIN PRODUCTS CORPORATION
LORAIN, OHIO
LORAIN PRODUCTS (CANADA) LTD, ST. THOMAS, ONTARIO

DWG SIZE D

J5715-004

PRINTED IN U.S.A.

MODEL
NA

# LORAIN INTERRUPTER

SPEC NO 5871-302 SERIAL NO _____

# CAUTION !

Do not use a test receiver or "earphone" to check interrupter outputs unless it is a high impedance test receiver. Most test receivers used in telephone offices are of low enough resistance to draw excessive current through the interrupter output transistors or mercury relay contacts. If in doubt about impedance of test receiver, connect a 500 ohm resistor in series with the test receiver. If this precaution is not followed, the output transistors or mercury relay contacts may be instantly destroyed without any visible sign of damage.

INSTRUCTIONS
LORAIN TYPE NA INTERRUPTER, SPEC 5871-302
SD-3003-01, T-3003-11

TABLE OF CONTENTS

INSTRUCTIONS
LORAIN TYPE NA INTERRUPTER, SPEC 5871-302
SD-3003-01, T-3003-11

## 1. DESCRIPTION, RATINGS

### a. General

LORAIN Type NA Interrupter, Spec 5871-302, operates from nominal 48 volt d-c to interrupt tone current and ringing current and to furnish ground pulse signals.

### b. Ringing Signals

Four consecutive one-second ringing signals, MR R1 BR1 through MR R1 BR4, are supplied between 0 to 4 seconds during each four-second cycle. These signals supply ringing current to four separate ringing circuits; since these signals are accurately commutated, ringing current is supplied to no more than one ringing circuit at any given time.

### c. Tone Signals

Two tone gates interrupt tone current supplied by an Interrupter mounted Model F4A Dial Tone Generator (when furnished) or an external 400 milliwatt or 5 watt tone source (T option wiring) to furnish 60 ipm (interruption-per-minute) busy signal and 120 ipm all-trunks-busy signal. Level of these tone signals is individually adjustable, in six-decibel steps, between 1/2 volt to 8 volts.

### d. Ground Pulse Signals

A dual ground pulse gate furnishes 60 IPM and 120 IPM ground pulse signals which can be connected to operate interruption relays or to light lamps as flash signals.

If optional 30 IPM and WINK 1 and WINK 2 ground pulse signals are required, two additional dual ground pulse gates are furnished.

### e. Circuit Cards

Nine (twelve if 30 IPM and WINK 1-2 signals are required) separate, independent, plug-in circuit cards are interconnected to make up all Interrupter circuits. These circuit cards are individually-removable so that, if failure should occur in any individual circuit card, it can easily be removed and replaced with a standby circuit card of similar type, to maintain service.

1. e. (continued)

Due to similarity of function in three types of circuit card, only six types of circuit card are required: since any circuit card is directly interchangeable with any other circuit card of similar type, a total of six standby circuit cards, one of each, will replace any given circuit card in this Interrupter circuit.

2. INSTALLATION

a. Mounting

LORAIN Type NA Interrupter, Spec 5871-302, can be mounted in a twenty-three inch relay rack. It requires 3-1/2 inches panel space, extends 4-3/4 inches to front of rack, and has overall depth of approximately 11 inches.

b. Electrical Connections

Installer connections are made at a thirty-point solder-type terminal block, at left side as viewed from rear of Interrupter. These connections are indicated on Wiring Diagram T-3003-11; they are summarized and described below. Timing of output signals is shown in a timing chart on Schematic Diagram SD-3003-01.

(1) If Model F4A Dial Tone Generator (X-option) is used in conjunction with this Interrupter, connect its tone signal load circuit between terminals 5 and 6 of the Interrupter terminal block.

If an external tone source is used in conjunction with this Interrupter, connect the tone source to terminals of Interrupter as follows:

| External Tone Source Terminals | Interrupter Terminals |
|---|---|
| ± 4 | 10 |
| COM | 11 |
| ∓ 4 | 12 |

NOTE: Interrupter must be equipped with "T" option wiring before external tone supply can be used.

(2) If office requires battery connected Ringing Generator, furnish Z-option wiring. If ground connected Ringing Generator is required, supply Y-option wiring.

(3) Connect tone signal load circuits between sets of tone output terminals of Interrupter as follows:

2. b. (3) (continued)

| Signal | Terminals |
|---|---|
| 60 IPM Busy | 21, 27 |
| 120 IPM All-trunks-busy | 22, 28 |

NOTE: One terminal (either) of each tone signal output circuit can be connected in common, either to battery or to ground.

(4) This Interrupter supplies four interrupted ringing output signals and two ground pulse signals. These signals are furnished during a four-second cycle as follows:

| Ringing Signals | Terminal |
|---|---|
| MR R1 BR1, 0 second to 1 second | 15 |
| MR R1 BR2, 1 second to 2 seconds | 16 |
| MR R1 BR3, 2 seconds to 3 seconds | 17 |
| MR R1 BR4, 3 seconds to 4 seconds | 18 |

| Ground Pulse Signals | |
|---|---|
| 60 IPM | 24 |
| 120 IPM | 25 |
| *30 IPM | 23 |
| **WINK 1 | 8 |
| **WINK 2 | 9 |

CAUTION: Each ground pulse output circuit is rated to supply 2 amperes; hence, ground pulse load connected at each output terminal must have resistance no less than 25 ohms.

*This signal is provided if W-option is furnished.

**This signal is provided if V-option is furnished.

(5) Supply fused negative 48 volt d-c at terminal 3 and connect terminal 1 to office ground (48 volt positive). If input fuse F1 should open, it furnishes resistance-battery at terminal 4 to give an external fuse alarm.

NOTE: Positive d-c input is connected to chassis ground by a jumper lead, to protect Interrupter against incorrect input polarity. If desired, this lead can be disconnected and removed after proper d-c input connections have been made.

## 3. ADJUSTMENT

### a. Signal Tone Levels

Level of 60 ipm (interruption-per-minute) busy signal and 120 ipm all-trunks-busy signal can be adjusted individually. Busy signal level is set by connection of an adjustment lead at one of five terminals of transformer T102; all-trunks-busy signal level is set by connection of an adjustment lead at one of five terminals of transformer T101. These connections are accessible at rear of Interrupter. Tone signal levels furnished at each terminal of each transformer are as follows:

| | | | | | |
|---|---|---|---|---|---|
| Voltage | 1/2 | 1 | 2 | 4 | 8 |
| Terminal | 2 | 3 | 4 | 5 | 7 |

### b. Manufacturer Adjustment

Potentiometer R1 of 4872-005 pulse generator is adjusted to set pulse repetition rate to 240 pulses per minute. This setting determines timing of all Interrupter circuits.

## 4. OPERATION

### a. Input Fuse

Fuse F1, at lower right side of front cover, protects d-c input of this Interrupter. Fuse F1 can be connected to give an external alarm if it should open. If necessary to replace this fuse, replace only with Type 70A indicator-alarm, 1-1/3 ampere, or equivalent.

### b. Circuit Cards

Nine (twelve if 30 IPM and WINK 1 and WINK 2 ground pulse signals are required) separate, independently-removable circuit cards make up this Interrupter circuit. Due to similarity of function in three types of circuit card, only six types of circuit card are required:

| Position | Description |
|---|---|
| A1 | 4872-005 pulse generator |
| A2, A3 | 4872-203 pulse divider |
| A4 | 4866-019 dual tone gate |
| A5, A7, A8 | 4866-033 dual ground pulse gate |
| A9, A10, A11, A12 | 4866-028 mercury relay ringing gate |
| A6 | 4866-030 dual nor gate |

NOTE: Circuit cards A6, A7, and A8 are optional.

4. b. (continued)

To gain access to circuit cards, pull front cover of Interrupter forward and remove from baseplate. If failure should occur in any circuit card, it can quickly and easily be withdrawn forward from its connector, and a replacement circuit card of similar type can be installed immediately to maintain service. Each connector has a polarizing key which assures that no circuit card can be installed at a position at which it would be damaged.

5. CIRCUIT DESCRIPTION, GENERAL

a. General

Refer to Schematic Diagram SD-3003-01 for the electrical circuit of the Interrupter. The Power Supply circuit is shown on Schematic Diagram SD-1845-01.

b. Timing Circuit, Figure 1

The timing circuit consists of a pulse generator driving a series of pulse dividers and establishes the basic timing pattern of the Interrupter. The pulse generator and first divider are on circuit card A1, while subsequent dividers are on circuit cards A2 and A3. Pulses from the pulse generator cause the first divider to make a complete cycle once every 1/2 second. One of the outputs of the first divider is connected to the input of the next divider. The next divider changes state each time its input voltage goes from approximately -22 volts to approximately ground, thereby producing one complete cycle every second. In the same manner, subsequent dividers act to divide the timing rate, as shown by lines A, B, C, D, F, and G on the timing chart. The timing chart shows the voltage produced at leads A, B, C, D, F, and G with the high portions of each line representing a voltage on the corresponding lead of approximately 22 volts, and the low portions representing approximately ground potential.

c. Ringing Gate Circuit, Figure 2

This circuit is composed of four mercury relay ringing gates. When the inputs of a particular ringing gate are at ground potential, the mercury relay is released to allow ringing current to flow. When approximately -22 volts is applied to one or more of the inputs of a ringing gate, the mercury relay is operated. When this relay is operated, ringing current flow is stopped. Timing chart on SD-3003-01 indicates periods during which ringing current is supplied.

d. Tone Gate Circuits, Figure 4

Tone is supplied to the 60 and 120 IPM tone gates from two 4 volt windings in series in the Model F4A Dial Tone Generator (not furnished as part

5. d. (continued)

of Interrupter or external tone source. When approximately -22 volts is applied to the control input of a tone gate, this gate allows tone to pass to its associated transformer. When no voltage is applied to its control input, the gate blocks tone from the tone generator.

e. NOR Gate Circuit, Figure 7

Certain pulse divider outputs are supplied to the inputs of a dual NOR gate. When -22 volts is applied to an input of the NOR gate, its corresponding output goes from -22 volts to ground potential. The non-symmetrical outputs of this NOR gate are used to control the operation of the WINK 1 and 30 IPM ground pulse gates.

f. Ground Pulse Gate Circuits, Figures 5, 7, 8

Each ground pulse gate switches ON, or conducts between its output terminal and ground, when its input is at approximately ground potential. When approximately -22 volts is applied to its input, the gate switches OFF, or stops output current flow. Gate inputs are connected to divider outputs of Figure 1 and NOR gate outputs of Figure 7 so that a gate is ON only during the time that the associated divider output is at approximately ground potential.

g. Power Supply, Figure 6 (See SD-1845-01)

The power supply circuit furnishes three voltages through multiple straps common to all circuit cards in the Interrupter. The following voltages are supplied: -2.2 volts, -22 volts, -48 volts. Voltage limiting is provided to protect the power transistors in ground pulse gate circuits. This voltage limiting lead is designated CP.

Resistors R3 and R1, capacitor C1, zener diode CR4 and transistor Q1 make up a series voltage regulator circuit which supplies -22 volts to Interrupter circuits. Forward voltage drop across diodes CR1, CR2, and CR3 provide -2.2 volts to Interrupter circuit cards requiring this voltage.

The CP voltage limiting circuit is composed of zener diode CR6, diode CR5, resistors R4 and R5 and capacitor C2. During normal operation, capacitor C2 is charged to 48 volts through diode CR5. When a voltage surge appears on the CP lead, the voltage rises across zener diode CR6 until its breakdown voltage is reached, about 10 volts. At this point, the voltage on the CP lead equals battery voltage plus the zener diode voltage, or about 60 volts, and any increase in voltage causes a current to flow which charges capacitor C2, thus limiting the surge voltage. When the surge has passed, capacitor C2 discharges through resistor R4 until its voltage is again 48 volts. Resistor R5 limits the initial capacitor charging current when the Interrupter is started.

## 6. TROUBLESHOOTING

If the input fuse blows, replace it with a 1-1/3 amp, 70A alarm type.

Different types of failure in various circuit cards will cause different trouble symptoms. As a guide to quick replacement of any defective circuit card, should this become necessary, possible trouble symptoms are indicated below. Each symptom denotes a defect in a specific circuit card, which is indicated.

| Symptom | Defective Card, Position |
|---|---|
| 60 IPM tone absent, continuous, or irregular; all other signals normal | 4866-019 dual tone gate, A4 |
| 120 IPM tone absent, continuous, or irregular; all other signals normal | 4866-019 dual tone gate, A4 |
| 60 IPM ground pulse absent, continuous, or irregular; all other signals normal | 4866-033 ground pulse gate, A5 |
| 120 IPM ground pulse absent, continuous, or irregular; all other signals normal | 4866-033 ground pulse gate, A5 |
| 30 IPM ground pulse absent, continuous, or irregular; all other signals normal | 4866-030 dual NOR gate, A6 or 4866-033 dual ground pulse gate, A7 |
| WINK 1 ground pulse absent, continuous, or irregular; all other signals normal | 4866-030 dual NOR gate, A6 or 4866-033 dual ground pulse gate, A7 |
| WINK 2 ground pulse absent, continuous, or irregular; all other signals normal | 4866-033 dual ground pulse gate, A8 |
| MR R1 BR4 absent, continuous, or irregular; all other signals normal | 4866-028 mercury relay ringing gate, A12 |
| MR R1 BR3 absent, continuous, or irregular; all other signals normal | 4866-028 mercury relay ringing gate, A11 |

6. (continued)

| Symptom | Defective Card, Position |
|---|---|
| MR R1 BR2 absent, continuous, or irregular; all other signals normal | 4866-028 mercury relay ringing gate, A10 |
| MR R1 BR1 absent, continuous, or irregular; all other signals normal | 4866-028 mercury relay ringing gate, A9 |
| MR R1 BR1-BR4 absent, continuous, or irregular; all other signals normal | 4872-203 pulse divider, A3 |
| MR R1 BR1-BR4, 60 IPM tone, 30 IPM, 60 IPM, WINK 1 and WINK 2 ground pulse signals absent, continuous, or irregular; all other signals normal | 4872-203 pulse divider, A2 |
| All signals either absent, continuous or irregular | 4872-005 pulse generator, A1 |

The following voltage chart shows voltages at important points in the circuit. All voltages are read with a 5000 ohms per volt a-c and 20,000 ohms per volt d-c multimeter, with 50 volts d-c applied to the input.

| Voltage | Between Terms. | Location | SD-3003-01 Figure | Remarks |
|---|---|---|---|---|
| 3.5 to 4.5 a-c | H and B | Tone Gate (A4) | 3 | |
| 3.5 to 4.5 a-c | F and B | Tone Gate (A4) | 3 | |
| 6.5 to 9.5 a-c | 1 and 7 | T101 | 3 | When tone is ON |
| 6.5 to 9.5 a-c | 1 and 7 | T102 | 3 | When tone is ON |
| 2.2 to 3.0 d-c | 6 and 7 | Power Supply | 6 | |
| 19.8 to 24.2 d-c | 5 and 7 | Power Supply | 6 | |
| 50 d-c | 1 and 7 | Power Supply | 6 | |
| 48 to 50 d-c | 2 and 7 | Power Supply | 6 | |

Voltages at the outputs of pulse dividers may be tested with a d-c voltmeter to check whether a divider is dividing properly, however, the following conditions must be considered:

6. (continued)

First: When a test probe is touched to a pulse divider output terminal, it causes an instantaneous disturbance in the Interrupter timing sequence. If the probe is held steadily on the terminal, no further disturbance occurs. Therefore, it is important to keep a good solid connection with the test probe if a meaningful reading is to be obtained.

Second: On the faster divider outputs, 60 and 120 IPM, for example, the meter will not follow the voltage exactly, never quite resting near either a zero or 22 volt reading. However, the meter is still useful for indicating the divider output rate.

When replacing the 4872-005 pulse generator, the rate of the new pulse generator must be adjusted by varying the potentiometer on the pulse generator card. The rate may be set by connecting a test receiver across 60 IPM busy tone output and listening, while observing the second hand of a watch or clock. Adjust the rate to produce 15 interruptions in 15 seconds.

LORAIN PRODUCTS CORPORATION
Lorain, Ohio, U.S.A.

LORAIN PRODUCTS (CANADA) LTD.
St. Thomas, Ontario, Canada

March 20, 1968

# ELECTRICAL PARTS LIST
# LORAIN MODEL NA INTERRUPTER
# SPEC. NO. 5871-302 L1

The quantity of spare parts (except fuses) listed should be sufficient for ten or less NA INTERRUPTERS for at least 18 months.

| Ref. Desig. | Lorain Products Corp. Part No. | Description | Quantity Rec. Spares |
|---|---|---|---|
| ASSEMBLIES | | | |
| A1 | 4872-005 | Pulse Generator Divider | 1 |
| A2 | 4872-203 | Dual Pulse Divider | 1 |
| A3 | 4872-203 | Dual Pulse Divider | * |
| A4 | 4866-019 | Dual Tone Gate | 1 |
| A5 | 4866-033 | Dual 2A Ground Pulse Gate | 1 |
| A9 | 4866-028 | .5A Relay Ringing Gate | 1 |
| A10 | 4866-028 | .5A Relay Ringing Gate | * |
| A11 | 4866-028 | .5A Relay Ringing Gate | * |
| A12 | 4866-028 | .5A Relay Ringing Gate | * |
| E1 | 4864-001 | Interupter Type NA | ** |
| FUSES | | | |
| | 2486-208 | 1.33A Alarm | 2 |
| RESISTORS | | | |
| R1 | 2656-509 | 50 Ohm 25W, Fixed | 1 |
| TRANSFORMERS | | | |
| T101 | 4463-004 | | - |
| T102 | 4463-004 | | - |
| MISCELLANEOUS | | | |
| | 2475-142 | Socket 8, Contacts | 1 |
| | 2475-747 | Connector Plug-In 15 Contact | 1 |

*This part appears more than once in this list. Use recommended spare quantity stated where part first appears in this list.

**For Rec. Spares, refer to Electrical Parts List for this assembly.

LORAIN PRODUCTS CORP.
Lorain, Ohio
November 11, 1968

# ELECTRICAL PARTS LIST
# LORAIN MODEL NA INTERRUPTER
# SPEC. NO. 5871-302 L2

The quantity of spare parts (except fuses) listed should be sufficient for ten or less NA INTERRUPTERS for at least 18 months.

| Ref. Desig. | Lorain Products Corp. Part No. | Description | Quantity Rec. Spares |
|---|---|---|---|
| ASSEMBLIES | | | |
| A6 | 4866-030 | Dual North Gate | 1 |
| A7 | 4866-033 | Dual 2A Ground Pulse Gate | 1 |
| MISCELLANEOUS | | | |
| | 2475-747 | Connector Plug-In 15 Contacts | 1 |

LORAIN PRODUCTS CORP.
Lorain, Ohio
November 12, 1968

# ELECTRICAL PARTS LIST
## LORAIN 1964-001 INTERRUPTER POWER SUPPLY ASSEMBLY

The quantity of spare parts (except fuses) listed should be sufficient for ten or less INTERRUPTER POWER SUPPLY ASSEMBLIES for at least 18 months.

| Ref. Desig. | Lorain Products Corp. Part No. | Description | Quantity Rec. Spare |
|---|---|---|---|
| **CAPACITORS** | | | |
| C1 | 2731-108 | 20UF 50V, Electrolytic | 1 |
| C2 | 2731-110 | 20UF 100V | 1 |
| **DIODES** | | | |
| CR1 | 2813-134 | 1N1200AR Silicon | 2 |
| CR2 | 2813-134 | 1N1200AR Silicon | * |
| CR3 | 2813-134 | 1N1200AR Silicon | * |
| CR4 | 2836-401 | 1N3028A, Zener | 1 |
| CR5 | 2812-121 | 1N537 Silicon | 1 |
| CR6 | 2836-116 | 1N4740 Zener | 1 |
| **FUSES** | | | |
| F1 | 2486-298 | 1.33A, Alarm | 3 |
| **RESISTORS** | | | |
| R2 | 2656-319 | 500 Ohm 5W, Fixed | 1 |
| R3 | 2651-189 | 1100 Ohm 1W, WW | 1 |
| R4 | 2656-419 | 500 Ohm 10W, Fixed | 1 |
| R5 | 2602-815 | 10 Ohm 2W, Fixed | 1 |
| **TRANSISTORS** | | | |
| Q1 | 2818-[illegible] | 2N1536 | 1 |
| **MISCELLANEOUS** | | | |
| | 2[illegible]-[illegible] | Fuse Holder Cap | 1 |
| | 2488-[illegible] | Fuseholder Body | 1 |
| | 2[illegible]-1[illegible] | Socket Power Transistor | 1 |

*This part appears more than once in this list. Use recommended spare quantity stated where part first appears in this list.

LORAIN PRODUCTS CORP.
Lorain, Ohio
June 20, 1969

Printed in U.S.A. 1hs

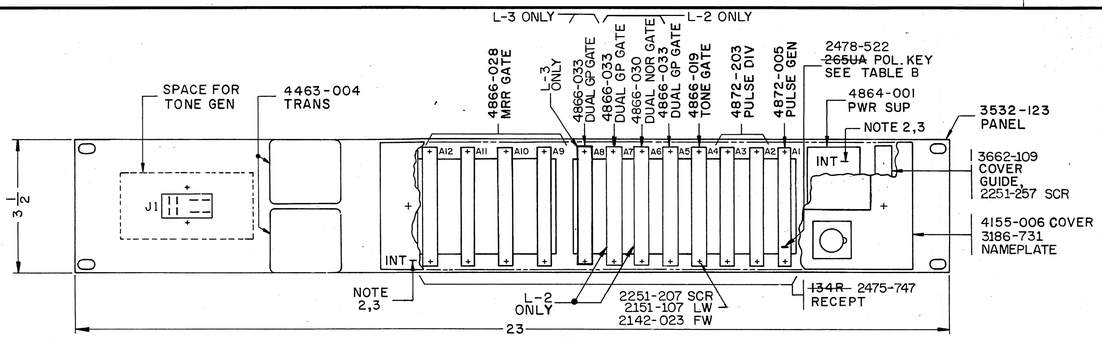


FRONT VIEW

INTERRUPTER ASSEMBLY

FIG 1

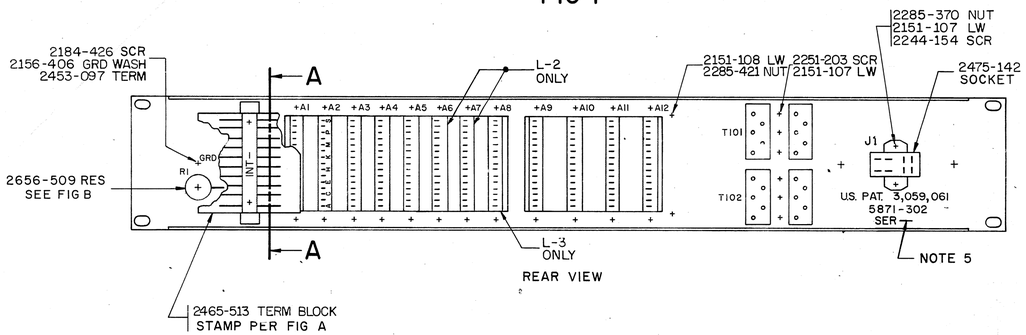


REAR VIEW

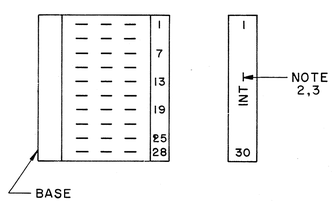


METHOD OF STAMPING
2465-513 TERM BLK

FIG A

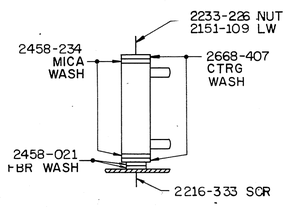


METHOD OF MTG
25 WATT RESISTORS

FIG B

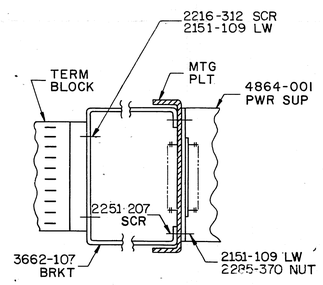


VIEW A-A

TABLE A

| COL | A | B | C | D | E | F | G | H |
|---|---|---|---|---|---|---|---|---|
| | EQUIPMENT | RATING | LIST | NO | CIRCUITS & FIGURES EQUIPPED: CIRCUIT | FIG | WRG | APP |
| | INTERRUPTER ASSEMBLY AND WIRING FOR 4 BRUSH DISTRIBUTION OF RING 1, 60 & 120 IPM TONE AND GROUND PULSES. | | 1 | 1 | T-3003-11 | 1 | | |
| | APPARATUS & WIRING REQD IN ADDITION TO L-1 WHEN 30 IPM GRD PULSE IS REQD | | 2 | | T-3003-11 | | W | W |
| | APPARATUS & WIRING REQD IN ADDITION TO L-1 & L-2 WHEN WINK PULSES ARE REQD | | 3 | | T-3003-11 | | V | V |

ENGINEERING NOTES

51. EQUIPMENT SHALL BE ORDERED IN ACCORDANE WITH TABLE A.
52. DRAWING NO. AND PART NO. ARE IDENTICAL WHERE 7 DIGIT (0000-000) PART NUMBERS ARE SHOWN.
53. ORDER SEPARATLY (ONE) MODEL F4A TONE GENERATOR WHEN 100 MILLIWATT DIAL TONE SUPPLY IS REQUIRED.

| L-3 | L-2 | L-1 | PART NO | DWG OR CODE NO | DESCRIPTION | NOTE | LINE |
|---|---|---|---|---|---|---|---|
| | | 2 | 2244-154 | | 6-32 X 5/16 F.H.M.S. UNDERCUT 1/16" | | 40 |
| | | 2 | 2251-205 | | 6-32 X 3/8 P.H.M.S. | | |
| | | 1 | 2156-406 | | GRD WASH | | |
| | | 1 | 2184-426 | | 8-32 X 1/4 SELF-TAP | | |
| | | 1 | 2453-097 | | TERM LUG | | |
| | | 2 | 2233-226 | | 10-32 X 3/8 | | 35 |
| | | 4 | 2285-421 | | 8-32 X 11/32 — HEX NUT | | |
| | | 4 | 2285-370 | | 6-32 X 1/4 | | |
| | | 2 | 2151-109 | | .337 X .194 X .047 | | |
| | | 4 | 2151-108 | | .296 X .168 X .040 — LOCK WASHER | | |
| 2 | 4 | 26 | 2151-107 | | .253 X .141 X .031 | | 30 |
| | | 1 | 2216-333 | | 10-32 X 2-3/4 | | |
| | | 2 | 2216-312 | | 10-32 X 3/8 | | |
| | | 4 | 2251-257 | | 8-32 X 1/2 — P.H.M.S. | | |
| 2 | 4 | 20 | 2251-207 | | 6-32 X 1/2 | | |
| | | 4 | 2251-203 | | 6-32 X 1/4 | | 25 |
| | | 2 | 2458-021 | | FBR WASHER | | |
| | | 2 | 2458-234 | 6011 | MICA WASHER | | |
| | | 2 | 2668-407 | 6000 | CENTERING WASHER | | |
| | | 1 | 2475-142 | | CINCH S-308AB SOCKET | | |
| | | 1 | 2656-509 | | 50 Ω 25W RESISTOR | | 20 |
| ~~1~~ | ~~2~~ | ~~9~~ | ~~265UA~~ | ~~143-953~~ | ~~POLARIZING KEY~~ | | |
| ~~1~~ | ~~2~~ | ~~9~~ | ~~134R~~ | | ~~CKT BOARD RECEPT.~~ | | |
| | | 1 | 3186-731 | | NAMEPLATE | | |
| | | 1 | 4936-651 | | CABLE FORM | | |
| | | 1 | 2465-513 | 103 | TERMINAL BLOCK | | 15 |
| | | 2 | 4463-004 | | TONE TRANSFORMER | | |
| | | 1 | 3532-123 | | MOUNTING PLATE | | |
| | | 2 | 3662-109 | ED-926-15 | COVER BRACKET ASSEMBLY | | |
| | | 1 | 3662-107 | ED-501-13 | TERM BLOCK MTG BRKT | | |
| | | 1 | 4864-001 | | POWER SUPPLY SUB-ASSEMBLY | | 10 |
| 1 | 2 | 9 | 2475-747 | | CKT BOARD RECEPT | | |
| 1 | 2 | 9 | 2478-522 | | POLARIZING KEY | | |
| | 1 | | 4866-030 | | DUAL NOR GATE | | |
| | | 4 | 4866-028 | | MERCURY RELAY RINGING GATE | | |
| 1 | 1 | 1 | 4866-033 | | DUAL GRD PULSE GATE (2 AMP) | | 5 |
| | | 1 | 4866-019 | | DUAL TONE GATE (400MW) | | |
| | | 2 | 4872-203 | | PULSE DIVIDER | | |
| | | 1 | 4872-005 | | PULSE GEN | | |
| | | 1 | 4155-006 | | COVER | | 1 |

STOCKLIST

TABLE B

POLARIZING KEY LOCATION CHART

| RECEPTACLE | TERMINAL |
|---|---|
| A1 | D |
| A2,3 | K |
| A4 | R |
| A5 | M |
| A9-12 | S |
| A6 | J |
| A7 | M |
| A8 | M |

L-2 ONLY
L-3 ONLY

| SHOP | INST | MANUFACTURING NOTES |
|---|---|---|
| X | | 1. STAMP COMPONENT DESIGNATIONS FRONT & REAR IN 1/8" CHARACTERS AS SHOWN. |
| X | | 2. STAMP FUNCTIONAL DESIGNATIONS "INT —" IN 5/32" CHARACTERS AS SHOWN. |
| X | | 3. STAMP FUNCTIONAL CKT NO. (INT 1,2 ETC) AS REQD ON JOB BASIS. |
| X | | 4. CONNECT LOOSE LEADS AT (T101) AND (T102) IN ACCORDANCE WITH INTERRUPTER WRG. DIAG. |
| X | | 5. STAMP SPECIFICATION, PATENT & SERIAL NO. ON REAR AS SHOWN. |

| | | |
|---|---|---|
| | | 10-19-64 |
| | M | 1 |
| LIST 2 ADDED CN 14949 | M | 12-20-66 |
| D Drennan / R. Pavelka 12-21-66 / R.H. Arnold 12-22-66 | | 2 |
| LIST 3 ADDED CN 14982 | M | 2-29-68 |
| D Drennan / D.J. Lauer 3/21/68 / R. Pavelka 3-21-68 / R.H. Arnold 3-21-68 | | 3 |
| STOCKLIST LINES 18 & 19 CANCELED, LINES 8 & 9 ADDED CN 18581 | M | 10-28-68 |
| D.I.D. / D.J. Lauer 2-3-69 / R. Pavelka 2-20-69 | | 4 |

ISSUE 4

J5871-302

POWER SYSTEMS

SPECIFICATION FOR SOLID STATE INTERRUPTER ASSEMBLY

LORAIN PRODUCTS CORPORATION
LORAIN, OHIO
LORAIN PRODUCTS (CANADA) LTD., ST. THOMAS, ONTARIO

DWG SIZE D

| | |
|---|---|
| DRAWN BY G.S. | DATE 10-19-64 |
| CHECKED BY | DATE |
| APPROVED BY R. Pavelka | DATE 11-2-64 |
| APPROVED BY R.H. Arnold | DATE 11-23-64 |
| RATING STANDARD | |

J5871-302

PRINTED IN U.S.A.

## SHEET INDEX

| SHEET NO. | CONTENTS |
|---|---|
| 1 | SHEET INDEX<br>CIRCUIT NOTES<br>SUPPORTING INFORMATION<br>OPTION INDEX<br>INFORMATION NOTES<br>INTERRUPTER TIMING CHART |
| 2 | FIG 1 TIMING CKT<br>FIG 2 RINGING GATES<br>FIG 3 60 & 120 IPM TONE GATES<br>FIG 4 LOW TONE GENERATOR<br>FIG 5 60 & 120 IPM GRD PULSE GATES |
| 3 | FIG 6 INTERRUPTER POWER SUPPLY<br>FIG 7 LOGIC & GP GATE FOR 30 IPM & WINK 1.<br>FIG 8 GRD PULSE GATE FOR WINK 2.<br>CAD 1 |

## CIRCUIT NOTES

101.

| DESIG | FUSE AMP | POTENTIAL | ONE PER |
|---|---|---|---|
| A | 2 | 48V SIG | INT |
| TRP | 1-1/3 | 48V SIG | INT WHEN "Z" OPT IS SPECIFIED. |
| | | | |
| A | — | GRD | INT |
| | | | |

| BATTERY SYMBOL | VOLTAGE RANGE |
|---|---|
| -48 | 46-52V |

102.

| FEATURE OR OPTION | | PROVIDE FIG | PROVIDE APP OR WRG | PROVIDE QUANTITY |
|---|---|---|---|---|
| FOUR BRUSH DISTRIBUTION OF RING 1, 50 & 120 IPM TONE AND GROUND PULSES | | 1,2,3, 4,5,6 | | 1 PER INT |
| DIAL TONE SUPPLY | INTERRUPTER MOUNTED 100MW DIAL TONE GENERATOR | | X | |
| | EXTERNAL 400 MW. OR 5W TONE SOURCE | | T | |
| OFFICE REQUIRES | BATTERY CONNECTED GENERATOR | | Z | |
| | GROUND CONNECTED GENERATOR | | Y | |
| 30 IPM GROUND PULSE OUTPUT | | | W | |
| WINK 1 & 2 GROUND PULSE OUTPUTS. | | 8 | V | |

103.

| NETWORK VALUES | | |
|---|---|---|
| NETWORK NO. | RESISTANCE IN OHMS | CAPACITANCE IN UF |
| | | |

104.

| RECORD OF FIGURES, WIRING AND APPARATUS CHANGES | | | | | | | |
|---|---|---|---|---|---|---|---|
| CHANGED ON ISS | IF JOB RECORDS DO NOT SPECIFY | THIS OPTION WAS FURN | SEE NOTE | USE IN CIRCUIT STD | A & M | MD | SPL |
| 3 | W FIG 7 | NONE | 102 | | | | |
| 4 | T OR V FIG 8 | NONE | 102 | | | | |
| | | | | | | | |

105. ADJUST 120 AND 60 IPM TONE VOLTAGE AT (T101) AND (T102) RESPECTIVELY, IN ACCORDANCE WITH NOTE 106.

106.

| TONE VOLTAGE ADJUSTMENT | |
|---|---|
| VOLTS | TRANS TERM |
| 0.5 | 2 |
| 1 | 3 |
| 2 | 4 |
| 4 | 5 |
| 8 | 7 |

107. ADJUST DIAL TONE VOLTAGE IN ACCORDANCE WITH SD-1716-02, TABLE A WHEN OPT "X" IS FURNISHED.

## SUPPORTING INFORMATION

| CATEGORY | NO. |
|---|---|
| EQUIPMENT ARRANGEMENT | J5871-302 |

## OPTION INDEX

| APP OR WRG | LOCATION |
|---|---|
| Z<br>Y | FIG 2 |
| X | FIG 4 |
| W | FIG 1, 7 |
| V | FIG 1, 7 |
| T | FIG 3 |

## INTERRUPTER TIMING CHART

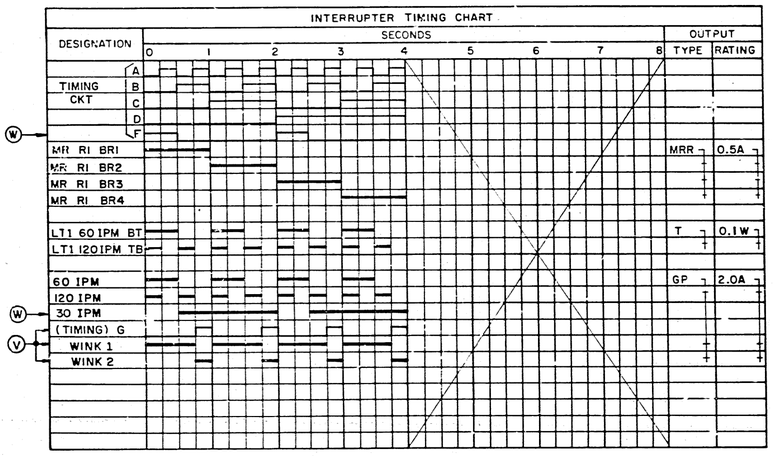


GP - GROUND PULSE GATE
MRR - MERCURY RINGING RELAY
T - TONE GATE

## INFORMATION NOTES

301. UNLESS OTHERWISE SPECIFIED, RESISTANCE VALUES ARE IN OHMS, CAPACITANCE VALUES ARE IN MICROFARADS.

302. LEAD AND EQUIPMENT DESIGNATIONS FOLLOWED BY A DASH (-) INDICATE CKT AND EQUIPMENT NUMBERING: 1 FOR 1ST (FIGURE, CKT OR EQPT), 2 FOR 2ND, ETC.

303. GROUND AND FUSED BATTERY LEADS IN NOTE 101 TO BE PROVIDED BY TEL. CO.

304. APPARATUS ENCLOSED WITHIN DOUBLE-LINE BOXES IS SHOWN FOR REFERENCE ONLY AND IS NOT FURNISHED AS PART OF THIS CIRCUIT.

| | | | |
|---|---|---|---|
| | | | 10-20-64 |
| | | M | 1 |
| ON SHEET 2 FIG 3, TONE LEADS WERE TERMINATED "TO FIG 3" CHANGE NO 13035 | | 2-8-65 | |
| G.S. | R. Cavalho 2-8-65 | 2-8-65 | 2 |
| "W" OPTION, FIG 7 ADDED CN 14949 | | 12-20-66 | |
| D. Dennett | R. Cavalho 12-21-66 | 12-23-66 | 3 |
| "T" & "V" OPTIONS, FIG 8 ADDED CN 14982 | | 2-26-68 | |
| D. Dennett | 2-26-68 | 3-21-68 | 4 |



ISSUE

SD-3003-01

POWER SYSTEMS

SOLID STATE INTERRUPTER CIRCUIT

FOUR BRUSH DISTRIBUTION OF RING 1
60 & 120 IPM TONE AND GROUND PULSES

ARRANGED FOR 100 MILLIWATT DIAL TONE SUPPLY

5871-302

| | | |
|---|---|---|
| DRAWN BY G.S. | DATE 10-20-64 | |
| CHECKED BY | DATE | |
| APPROVED BY R. Cavalho | DATE 10-23-64 | |
| APPROVED BY R. W. Linnell | DATE 11-23-66 | |
| RATING STANDARD | | |

SD-3003-01

LORAIN PRODUCTS CORPORATION
LORAIN, OHIO
LORAIN PRODUCTS (CANADA) LTD., ST. THOMAS, ONTARIO

DWG SIZE D

3 SHEETS

SHEET 1

PRINTED IN U.S.A.

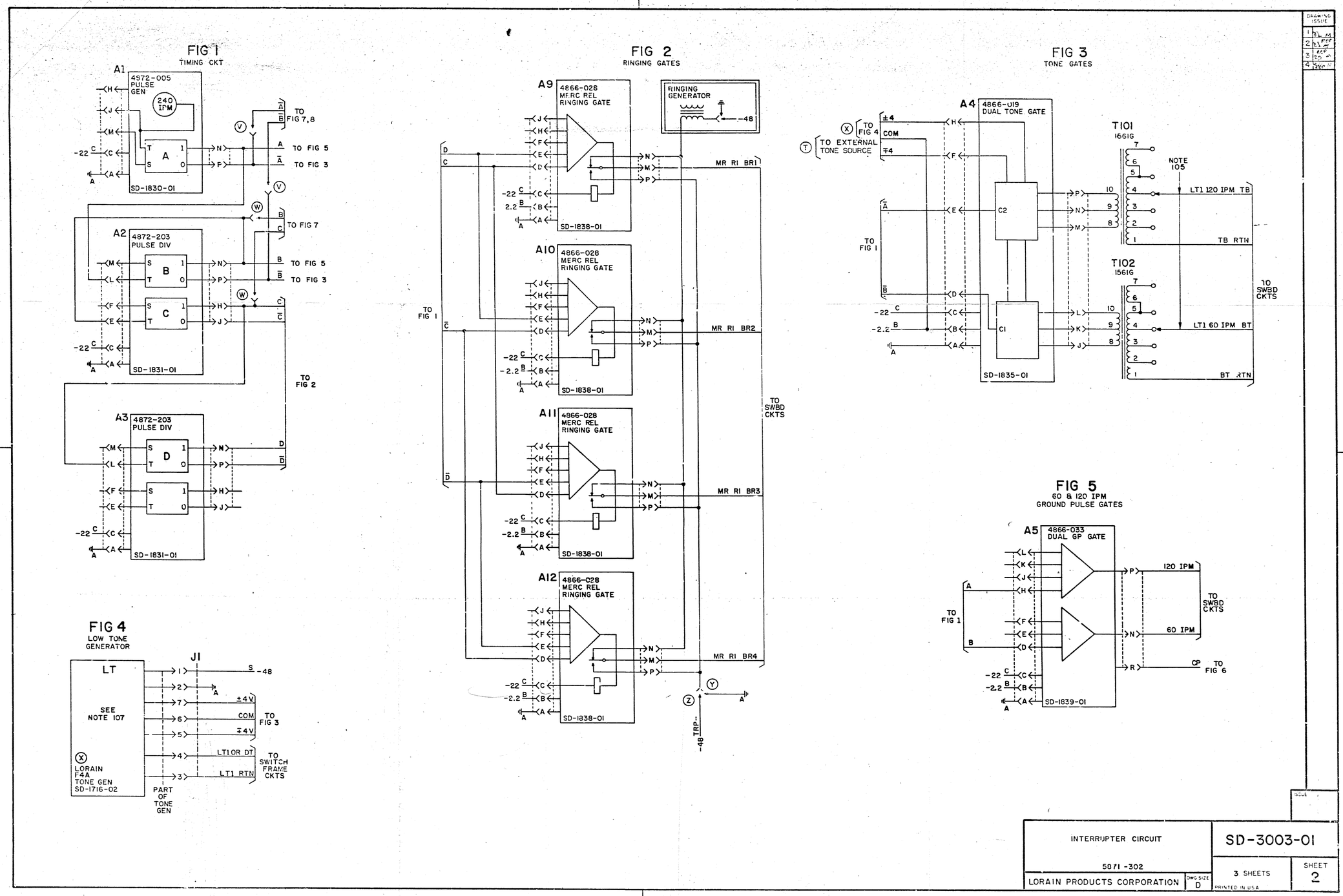


| | | |
|---|---|---|
| INTERRUPTER CIRCUIT<br>5871-302 | SD-3003-01 | |
| LORAIN PRODUCTS CORPORATION — DWG SIZE D — PRINTED IN USA | 3 SHEETS | SHEET 2 |

## FIG 6
POWER SUPPLY

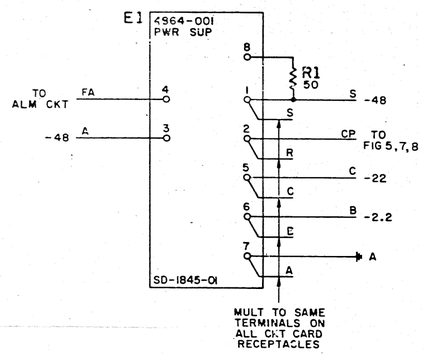


## FIG 7
LOGIC & GROUND PULSE GATE FOR 30 IPM & WINK 1

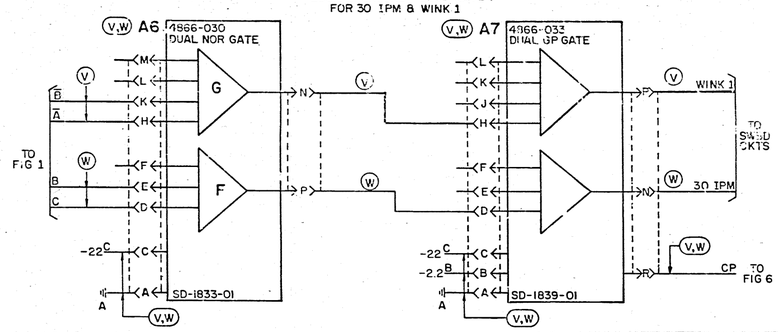


## CAD I
(FOR FIG 2,3,4,5,6,7,8)

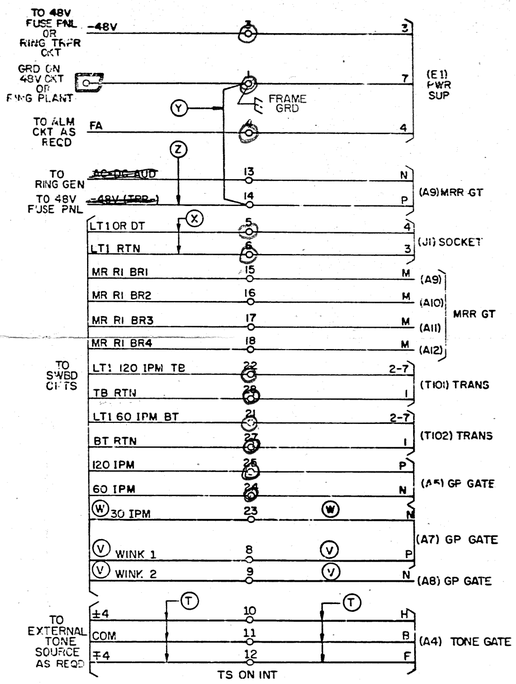


## (V) FIG 8
GROUND PULSE GATE FOR WINK 2

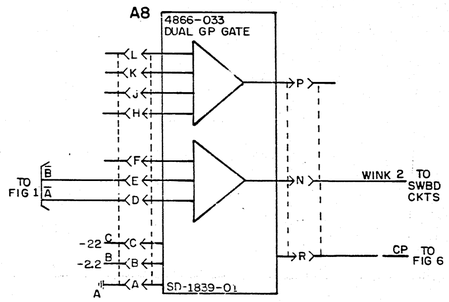


| DRAWING ISSUE | |
|---|---|
| 1 | KEP |
| 2 | |
| 3 | |
| 4 | |

| | | |
|---|---|---|
| INTERRUPTER CIRCUIT<br>5871-302 | SD-3003-01 | |
| LORAIN PRODUCTS CORPORATION — DWG SIZE D | 3 SHEETS | SHEET 3 |

PRINTED IN U.S.A.

| TABLE A | | | | | | | | |
|---|---|---|---|---|---|---|---|---|
| SD-T DWG CROSS REFERENCE & FIGURE LOCATION TABLE | | | | | | | | |
| ITEMS IN PARENTHESES ARE FOR INFORMATION ONLY AND ARE NOT TO BE RECORDED ON JOB WIRING LIST DRAWING | | | | | | | | |
| LINE | SD-3003-01 | | | T-3003-11 | | | | REMARKS |
| | SHEET | FIG | OPT | FIG | WRG | APP | SHEET | |
| 1 | 2 | 1 | | 1 | | | 2 | |
| | 2 | 2 | | 1 | | | 2 | |
| | 2 | 3 | | 1 | | | 2,3 | |
| | 2 | 4 | | 1 | | | 3 | |
| 5 | 2 | 5 | | 1 | | | 2 | |
| | 3 | 6 | | 1 | | | 2 | |
| | 3 | CAD1 | | 81 | | | 3 | |
| | | | Z | | Z | | | |
| | | | Y | | Y | | | |
| 10 | | | X | 81 | X | | 3 | |
| | | | W | | W | W | | |
| | | | V | | V | V | | |
| | | | T | | T | | | |
| | 3 | 7 | | 1 | | | 2 | |
| 15 | 3 | 8 | | 1 | | | 2 | |
| | | | | | | | | |
| | | | | | | | | |

| TABLE B | | | | | | | | |
|---|---|---|---|---|---|---|---|---|
| RECORD OF FIGURES, APPARATUS AND WIRING CHANGES | | | | | | | | |
| CHANGED ON ISSUE | IF OFFICE RECORDS | | THIS OPTION WAS FURNISHED | SEE ENG NOTE | RATING | | | |
| | SPECIFY | DO NOT SPECIFY | | | STD | A&M | MD | SPL |
| 2 | | W | NONE | | | | | |
| 3 | | V | NONE | | | | | |
| 3 | | T | NONE | | | | | |
| | | | | | | | | |

| TABLE D |
|---|
| 60 & 120 IPM TONE VOLTAGE ADJUSTMENT |
| VOLTS | TRANS TERM |
| 0.5 | 2 |
| 1 | 3 |
| 2 | 4 |
| 4 | 5 |
| 8 | 7 |

## ENGINEERING NOTES

| 51 | THIS DRAWING AGREES WITH | ISSUE | 1 | 1 | 2 | 3 |
|---|---|---|---|---|---|---|
| | SD-3003-01 | ISSUE | 1 | 2 | 3 | 4 |

52. EQUIPMENT ARRANGEMENT PER J5871-302

53. WHEN 100 MW DIAL TONE SUPPLY IS REQUIRED ORDER SEPARATELY (ONE) LORAIN MODEL F4A 100 MILLIWATT "PLUG-IN" DIAL TONE GENERATOR. PREWIRED SOCKET (J1) FOR PLUG-IN TONE GENERATOR IS FURNISHED AS STANDARD EQUIPMENT WITH ALL INTERRUPTERS COVERED BY SPEC J5871-302.

## MANUFACTURING NOTES

| SHOP | INST | |
|---|---|---|
| X | | 1. COLOR CODED LEADS TO BE 24 GA EXCEPT AS NOTED, LEADS NOT COLOR CODED TO BE BARE 24 GA SOLID. |
| X | | 2. B1-TERMINAL NEAREST PANEL. |
| X | | 3. a-LEADS INSULATED WITH VARNISHED CAMBRIC SLEEVING. |
| X | X | 4. AT-LEADS CONNECTED AFTER TEST BY INSTALLER. FURNISH LP-394 TAGS FOR THESE LEADS. |
| X | | 5. LEADS SHOWN TERMINATED IN COMPONENTS WITHOUT TERMINALS ARE FURNISHED WITH COMPONENTS. |
| X | | 6. D-WIRING NOT INCLUDED IN LOCAL CABLE FORM BUT RUN AS SEPARATE LEADS. |
| X | | 7. PTa-PIGTAIL LEADS INSULATED WITH VARNISHED CAMBRIC SLEEVING. |
| X | X | 8. ALL LEADS IN FIG 81 TO BE RUN BY THE INSTALLER. |
| | X | 9. ADJUST 120 & 60 IPM TONE VOLTAGE AT (T101) & (T102) RESPECTIVELY IN ACCORDANCE WITH OFFICE REQUIREMENTS, AND SOLDER LEADS IN PLACE. (SEE TABLE D) |
| | X | 10. ADJUST DIAL TONE VOLTAGE IN ACCORDANCE WITH OFFICE REQUIREMENTS AND SD-1716-02, TABLE A. |
| X | | 11. LEADS FOR "W", "V" & "T" WIRING TO BE RUN AS LOOSE WIRES & TIED TO THE WRG HARNESS. |

| | | | |
|---|---|---|---|
| | | 10-19-64 | |
| | | m | 1 |
| "W" APP & WRG ADDED CN 14949 | | 12-21-66 | |
| D. Dunn | R. Dunlap 12-2-66 | 12-23-66 | 2 |
| "T" & "V" OPTIONS, LOC 228 ADDED CN 14982 | | 3-8-68 | |
| D. Dunn | 3-27-68 | 3-21-68 | 3 |

| TABLE C | | | | | | | | | |
|---|---|---|---|---|---|---|---|---|---|
| FEATURE TABLE | | | | | | | | | |
| ITEM | FEATURE | | | SPECIFY T-3003-11 | | | | AUTOMATIC | REMARKS |
| | | | | FIG | QUAN | WRG | APP | | |
| 1 | COMMON FEATURES | INTERRUPTER CKT (SOLID STATE TYPE) ARRANGED TO PROVIDE: 4 BRUSH DISTRIBUTION OF RING 1 USING MERCURY RINGING RELAYS 60 & 120 IPM TONE AND GROUND PULSES | | 1 | 1 | | | | |
| 2 | OPTIONAL FEATURES | OFFICE REQUIRES | BATTERY CONNECTED GENERATOR | | | Z | | | |
| | | | GROUND CONNECTED GENERATOR | | | Y | | | |
| | | 30 IPM GROUND PULSE OUTPUT | | | | W | W | | |
| 3 | | WINK 1 & 2 GROUND PULSE OUTPUTS | | | | V | V | | |
| 4 | | DIAL TONE SUPPLY | INTERRUPTER MOUNTED 100 MW DIAL TONE GENERATOR | | | X | X | | SEE NOTE 53 |
| | | | EXTERNAL 400 MW OR 5W TONE SOURCE | | | T | | | |

| TABLE E | | | |
|---|---|---|---|
| FUSE REQUIREMENTS | | | |
| ITEM NO | FIG | FUSE | REMARKS |
| 1 | 81 | 2 AMP NEG 48V SIG | 1 PER INT |
| 1 | 81 | GRD ON 48V FUSE PNL | 1 PER INT |
| 2 | 81 | 1-1/3 AMP NEG 48V SIG | 1 PER INT WHEN "Z" WRG IS SPEC'D |
| | | | |

## INFORMATION NOTES

101. UNLESS OTHERWISE SPECIFIED, RESISTANCE VALUES ARE IN OHMS, CAPACITANCE VALUES ARE IN MICROFARADS.

102. LEAD AND EQUIPMENT DESIGNATIONS FOLLOWED BY A DASH (-) INDICATE CKT AND EQUIPMENT NUMBERING: 1 FOR 1ST (FIGURE, CKT OR EQPT), 2 FOR 2ND, ETC.

103. GROUND AND FUSED BATTERY LEADS IN TABLE E TO BE PROVIDED BY TEL. CO.



ISSUE

T-3003-11

POWER SYSTEMS

SOLID STATE
INTERRUPTER CIRCUIT

4 BRUSH DISTRIBUTION OF RING 1
60 & 120 IPM TONE AND GROUND PULSES

ARRANGED FOR
100 MILLIWATT DIAL TONE SUPPLY

5871-302

| | |
|---|---|
| DRAWN BY G.S. | DATE 10-19-64 |
| CHECKED BY | DATE |
| APPROVED BY R. Dunlap | DATE 11-2-64 |
| APPROVED BY | DATE 11-23-66 |
| RATING STANDARD | |
| T-3003-11 | |

LORAIN PRODUCTS CORPORATION
LORAIN, OHIO
LORAIN PRODUCTS (CANADA) LTD., ST. THOMAS, ONTARIO

CDWG SIZE D | 3 SHEETS | SHEET 1

PRINTED IN U.S.A.

O indicates used

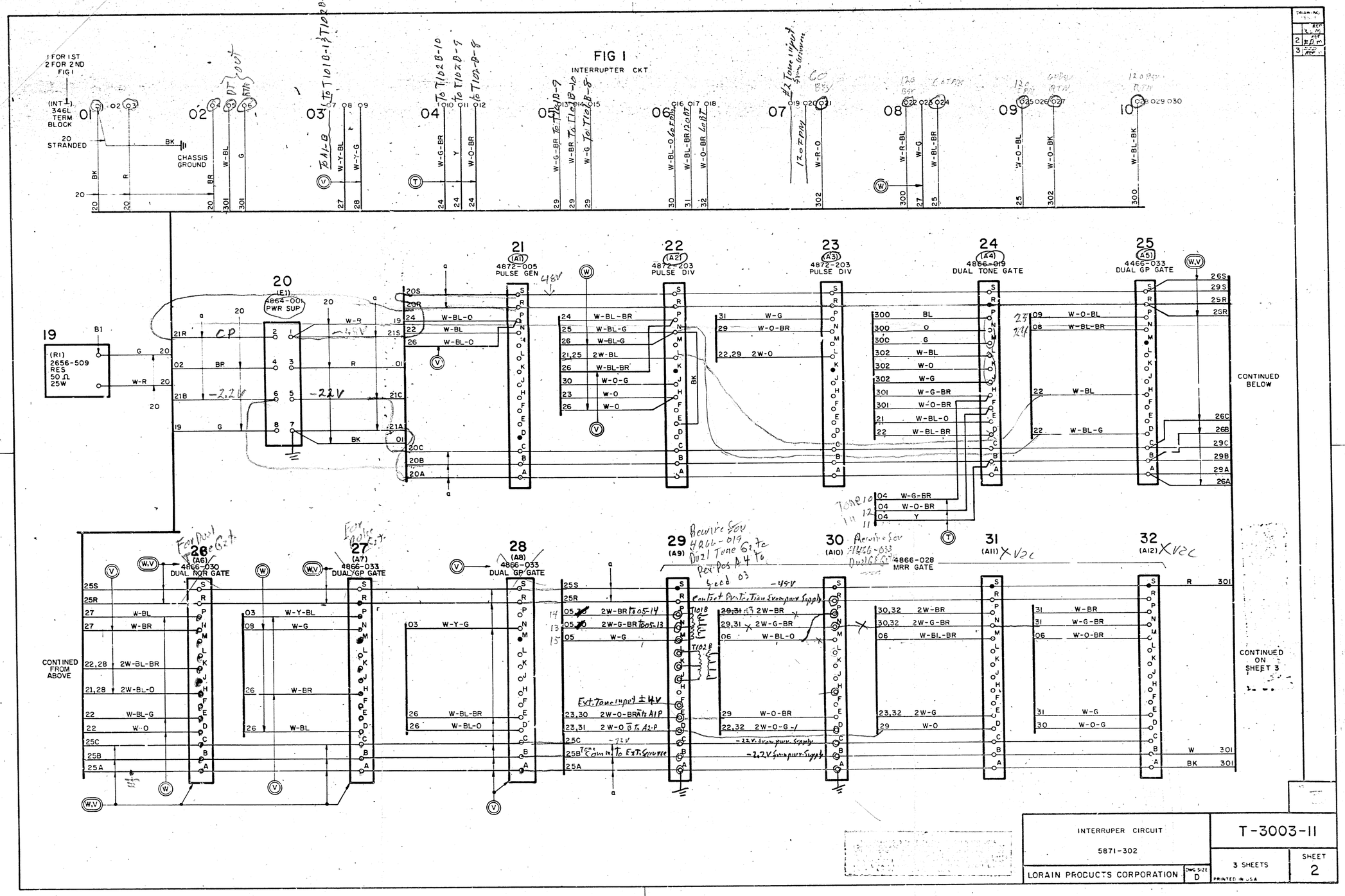


| | |
|---|---|
| INTERRUPER CIRCUIT<br>5871-302 | T-3003-11 |
| LORAIN PRODUCTS CORPORATION — DWG SIZE D — PRINTED IN U.S.A. | 3 SHEETS — SHEET 2 |

FIG 1 (CON'T)

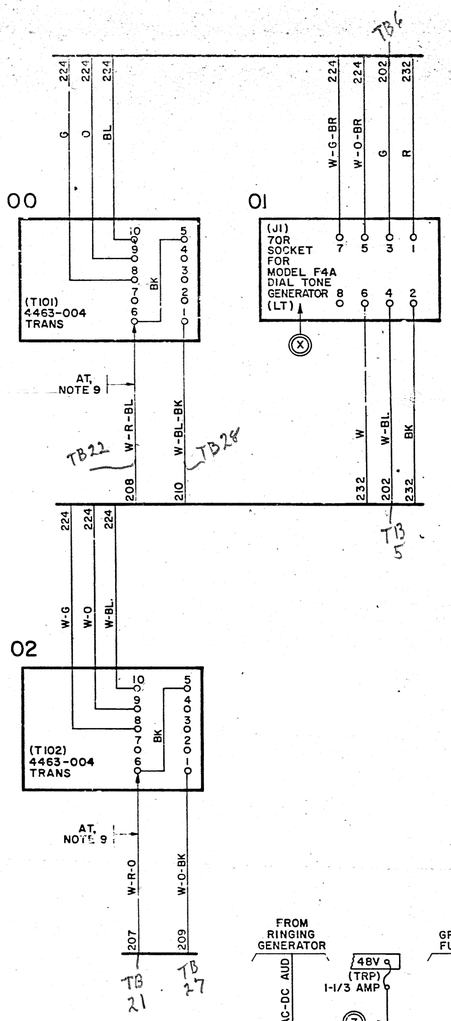


FIG 81
INSTALLER WIRING

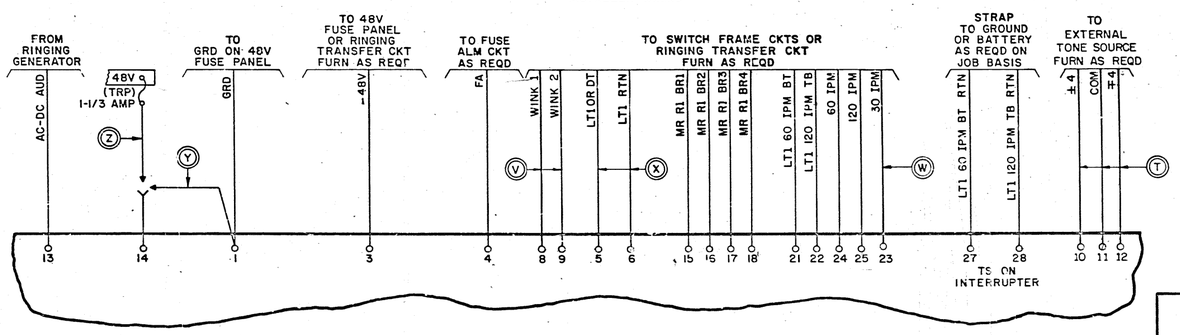


| | |
|---|---|
| INTERRUPTER CIRCUIT<br>5871-302 | T-3003-11 |
| LORAIN PRODUCTS CORPORATION — DWG SIZE D — PRINTED IN U.S.A. | 3 SHEETS — SHEET 3 |

# FIG 1

POWER SUPPLY

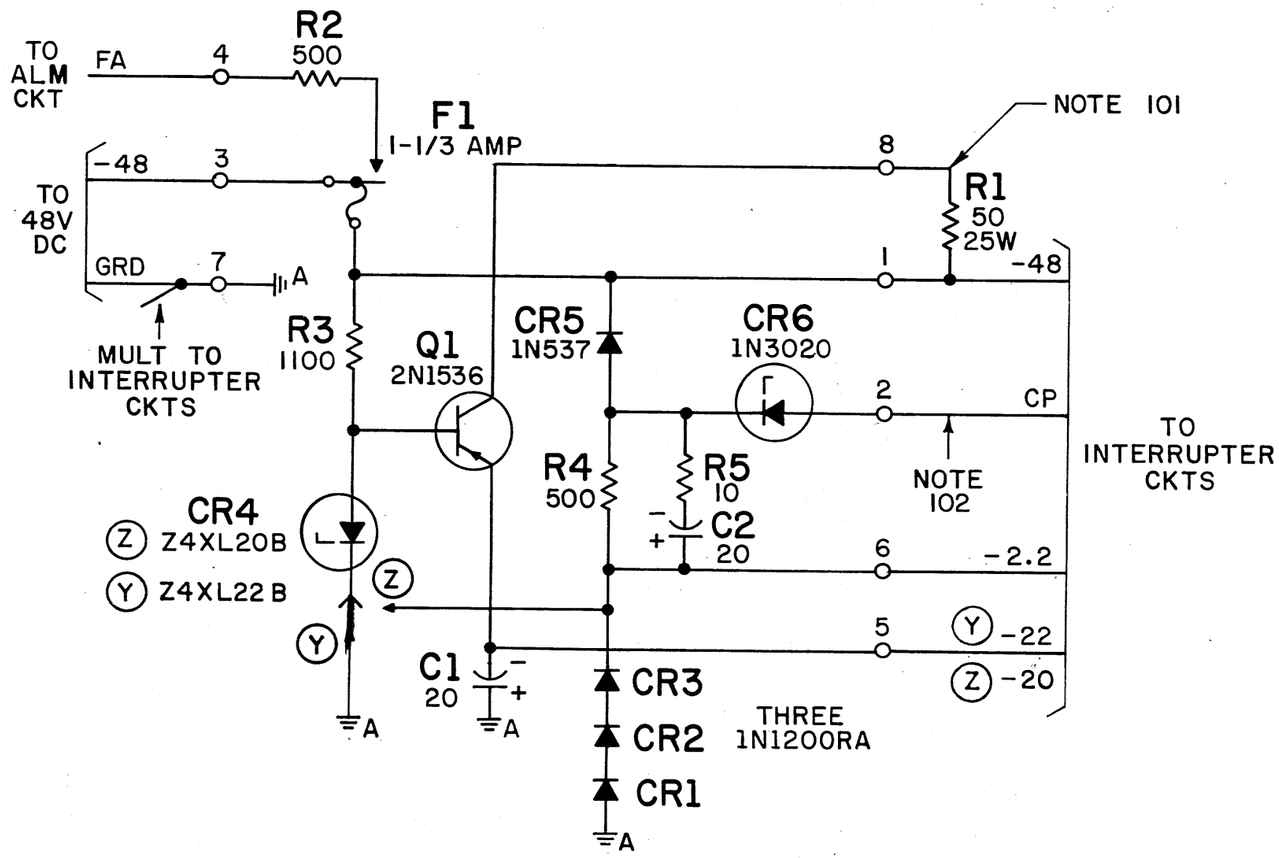


CIRCUIT NOTES

101. (R1) RESISTOR IS NOT FURNISHED AS PART OF THIS ASSEMBLY AND SHALL BE MOUNTED EXTERNALLY.

102. (CP) LEAD PROVIDES "CONTACT PROTECTION" TO ABSORB INDUCTIVE TRANSIENTS FROM RELAYS CONNECTED TO GROUND PULSE GATES.

103. "Z" OPTION IS MFR DISC AFTER 6-10-65, AFTER WHICH PROVIDE "Y" OPTION FOR ALL ORDERS.

| DWG. ISS | CHG NO. | DATE | DRAWN BY | APP BY |
|---|---|---|---|---|
| 1M | | | | |
| (R3) WAS 900Ω | | | | |
| 2M | 11982 | 10-21-64 | D.L. | REP BWH 10/21/64 |
| (R3) WAS 820Ω | | | | |
| 3 | 13033 | 2-4-65 | D.L. M | REP BWH 2/4/65 |
| "Z" & "Y" OPTIONS ADDED | | | | |
| 4 | 13093 | 6-10-65 | D. Lewis | REP BWH |

| | |
|---|---|
| DRAWN BY D. Lewis | DATE 8-12-64 |
| CHECKED BY | DATE |
| APPROVED BY R. Pavelka | DATE 8-12-64 |
| APPROVED BY B W Howald | DATE 10-7-64 |

TYPE NA INTERRUPTER

POWER SUPPLY

4864-001
4864-004

LORAIN PRODUCTS CORPORATION
LORAIN, OHIO
LORAIN PRODUCTS (CANADA) LTD.
ST. THOMAS, ONTARIO

DWG SIZE B

PRINTED IN USA

SD-1845-01

LP428

# TONE GENERATOR

F4A
5114-003

# INSTRUCTIONS AND CIRCUIT DESCRIPTION
# LORAIN MODEL F4A AND 4871-307 TONE GENERATORS

## TABLE OF CONTENTS

# INSTRUCTIONS AND CIRCUIT DESCRIPTION
# LORAIN MODEL F4A AND 4871-307 TONE GENERATORS

## 1. RATINGS

Input: 46-52 volt d-c; 0.1 ampere

Output: 600 Hz modulated at 120 cycle; 100 milliwatts

## 2. DESCRIPTION

These Tone Generators produce continuous tone, suitable for use as dial tone. When interrupted, their tone output is also suitable for use as busy or overflow signal.

Two separate output circuits are furnished. One circuit has two 4 volt windings in series which can be connected to an Interrupter tone gate circuit. The output voltage of the other circuit is adjustable between 0.5 volt and 10.5 volts.

Model F4A differs from the 4871-307 Tone Generator in that Model F4A is equipped with a cover.

### a. Mounting

Overall dimensions of Model F4A Tone Generator are 5-1/2 inches by 3-15/32 inches by 1-23/32 inches.

Overall dimensions of the 4871-307 Tone Generator are 5-1/4 inches by 3-5/16 inches by 1-5/8 inches.

Each unit has a male plug and two ball studs at the rear of the assembly. To install the Tone Generator, line up the male plug and the two ball studs with their matching receptacles and plug unit in.

### b. Electrical Connections

Each Tone Generator has an eight prong male plug. Electrical connections are made to a matching female plug with terminals 1 to 8.

(1) Connect terminals 5, 6 and 7 to an Interrupter tone gate circuit if interrupted dial tone is desired.

| Voltage | Terminal |
|---|---|
| ∓4V | 5 |
| 0 | 6 |
| ±4V | 7 |

2. b. (2) Adjustable tone output is available at terminals 3 and 4. Tone output voltage can be adjusted by connection of adjustment leads to two of Tone Generator output terminals 6 through 10 on transformer T1, as follows:

| Tone Level Voltage | T1 Transformer Terminals |
|---|---|
| 0.5 | 6, 7 |
| 1.0 | 7, 8 |
| 1.5 | 6, 8 |
| 3.0 | 8, 9 |
| 4.0 | 7, 9 |
| 4.5 | 6, 9 |
| 6.0 | 9, 10 |
| 9.0 | 8, 10 |
| 10.0 | 7, 10 |
| 10.5 | 6, 10 |

(3) Supply nominal 48 volt negative battery at terminal 1 and positive ground at terminal 2.

CAUTION: Input battery polarity is critical. This Tone Generator will not operate unless input polarity is correct.

3. CIRCUIT DESCRIPTION

a. Input Circuit

D-c input is supplied across series resistors R2 and R9. Voltage developed across R2 is furnished to pulse generator and amplifier circuits, which are described below. Capacitor C2 bypasses voltage transients, which would otherwise appear across resistor R2, to prevent transmission of noise to d-c output.

b. Pulse Generator

Transistor Q1, capacitor C1, resistors R7, R8, and R4, and potentiometer R3, make up a pulse generator.

Initially, transistor Q1 is at cutoff. When d-c input is applied, capacitor C1 charges through resistances R3, R8, R7, and R9. Capacitor charge current flows until C1-R7 voltage increases to threshold emitter-base one voltage of Q1, at which time C1 discharges through Q1 emitter to base one, and R7. When capacitor C1 completes discharge, Q1 emitter current ceases to flow and Q1 returns to cutoff. Capacitor C1 then recharges to repeat this cycle.



14

4. b. (continued)

Discharge interval of capacitor C1 is brief, so that transistor Q1 conducts only for a brief interval during each pulse generator cycle. When Q1 conducts, a current transient flows from positive input through resistor R4, base two to base one of Q1, and resistor R9 to negative input. This current causes a voltage transient (pulse) to be developed across resistor R4; voltage transients developed across R4 are supplied as pulse output.

Setting of potentiometer R3 determines time-constant required to charge capacitor C1, hence, it determines pulse repetition rate. Potentiometer R3 is adjusted to obtain a pulse repetition rate of 120 pps (pulse per second).

c. Amplifier

Each time a voltage transient appears across resistor R4, it causes a current transient to flow from positive input through resistor R5, emitter to base of transistor Q2, base two to base one of transistor Q1, and resistor R9 to negative input. This current transient momentarily drives Q2 to conduction.

Transistor Q2 is connected in cascade with transistor Q3 to form a two-stage amplifier: when Q2 conducts, a current transient flows from positive input through Q3 emitter to base, capacitor C3, Q2 emitter to collector, and resistors R6 and R9, to negative input. This current momentarily drives Q3 to conduction.

Base current of transistor Q3 charges capacitor C3. After each pulse interval, when Q3 base current ceases to flow, C3 voltage is applied across resistors R5 and R1. Resistor R1 voltage is applied as positive base-emitter potential to Q3, to maintain Q3 at cutoff until pulse generator output again drives Q2 and Q3 to conduction.

d. Output Circuit

When transistor Q3 conducts, a current transient flows from positive input through Q3 emitter to collector, primary turns between terminals 2 to 3 of output transformer T1, and resistor R9, to negative input. This current transient excites a tuned circuit, composed of transformer T1 primary winding and capacitor C4, to resonance at a frequency of 600 cps (cycles per second).

Since transistor Q3 supplies 120 current transients per second to transformer T1 and capacitor C3, T1 and C4 produce a 600 Hz damped wave which recurs 120 times per second. Primary winding current induces tone voltage in two tapped T1 secondary windings.

3. d. (continued)

One of the windings supplies two 4 volt outputs which can be connected to an Interrupter tone gate circuit. The other winding is tapped to provide adjustable tone voltage between 0.5 and 10.5 volts to other tone circuits. Either or both of these windings can be connected to supply tone current.

Capacitor C4 is connected between T1 primary terminal 1 or 2 and T1 primary terminal 4 or 5 as necessary to adjust resonant frequency of T1 and C4 to 600 Hz.

LORAIN PRODUCTS CORPORATION
Lorain, Ohio, U.S.A.

LORAIN PRODUCTS (CANADA) LTD.
St. Thomas, Ontario, Canada

August 6, 1969

MODEL TB20R

# SUB-CYCLE

RINGING GENERATOR

Spec. No. 5153-311 Serial No. _____

INSTRUCTIONS
LORAIN MODEL TB20R SUB-CYCLE RINGING GENERATOR
SD-1877-01

TABLE OF CONTENTS

# INSTRUCTIONS
# LORAIN MODEL TB20R SUB-CYCLE RINGING GENERATOR
# SD-1877-01

## 1. RATINGS

Input: 46-54 volt d-c; .5 amperes

Output: 20 cycle ringing; superimposed 420 cycle modulated at 40 cycles; 85, 95 and 110 volt; 15 watts

## 2. DESCRIPTION

LORAIN Model TB20R SUB-CYCLE Ringing Generator supplies 20 cycle ringing current and ringback tone from a nominal 50 volt battery. Frequency is regulated to remain within plus-or-minus 1/3 cycle of rated output frequency despite a d-c input voltage variation between 46 and 54 volts or ringing load current variation between zero and full rated load.

This ringing generator has an overload protection device to protect semiconductor components against damage; therefore, overload will not cause fuses to open. Because this ringing generator contains no vibrating or rotating parts, it does not require periodic maintenance or adjustment.

## 3. INSTALLATION

### a. Mounting

LORAIN Model TB20R SUB-CYCLE Ringing Generator is designed to be mounted in a 23 inch relay rack. When mounted, it requires 3 1/2 inches of panel space, extends 5 1/8 inches to the front of the rack and has an overall depth of 10 1/2 inches.

CAUTION: In mounted position, ventilating grills at top and bottom of ringing generator must be unobstructed. This is essential to proper cooling during operation.

3. (continued)

b. Electrical Connections

Installer connections are made at a ten point solder-type terminal block at left side as viewed from rear of the SUB-CYCLE Ringing Generator. These connections are indicated on wiring diagram T-1877-11 and are summarized below.

(1) Three output voltage levels are available at the terminals indicated below:

| Terminal | Output Voltage |
|---|---|
| 1 | COMMON |
| 2 | 85 Volts |
| 3 | 95 Volts |
| 4 | 110 Volts |

(2) Supply negative 48 volt battery at terminal 6 and office ground at terminal 7.

(3) Terminal 8 supplies resistance-battery to an external alarm circuit in event fuse RG opens.

4. ADJUSTMENT

a. Output Voltage

Three output voltage options are provided: 85, 95 and 110 volts. For 85 volt output, connect ringing leads to terminals 1 and 2; for 95 volt output, connect the ringing leads to terminals 1 and 3; for 110 volt output, connect the ringing leads to terminals 1 and 4.

b. Tone Level

Potentiometer R26 adjusts the level of ringback tone. To increase ringback tone level, turn screwdriver adjustment shaft of potentiometer R26 clockwise; to decrease, turn shaft of potentiometer R26 counterclockwise.

c. No-load and Full-load Ringing Voltage

This ringing generator is factory adjusted to supply correct output voltage at both no-load and full-load. Due to the slight interaction between no-load voltage adjustment potentiometer R16 and fine frequency adjustment potentiometer R1, the following procedure should be followed:

4. c. (continued)

(1) With no load applied to ringing generator, adjust no-load voltage adjustment potentiometer to obtain correct output voltage.

(2) Reset output frequency to exact value with FREQUENCY ADJUST potentiometer.

(3) Reset no-load voltage adjustment potentiometer to again obtain correct output voltage.

(4) With full rated load applied to ringing generator sub-chassis, adjust full-load voltage adjustment resistor R17 to obtain correct output voltage (equal to no-load output voltage). Full load output current is 150 ma.

CAUTION: Do not attempt to change output voltage of ringing generator by changing setting of its no-load output voltage potentiometer. This adjustment should be used only to obtain correct output voltage as indicated above. Ringing voltages can be selected as described in a, above.

d. Overload Adjustment

This ringing generator has an overload protection circuit that prevents damage to semiconductor components due to overload. The setting of overload adjustment potentiometer is a factory adjustment and no attempt should be made to re-adjust it; doing so may either prevent the ringing generator from delivering full rated power or cause permanent damage to the ringing generator.

5. CIRCUIT DESCRIPTION

Basically, the ringing generator circuit consists of an LC oscillator, driver amplifier, power amplifier, ringback tone oscillator and an overload protection circuit.

Transistors Q101 and Q102, inductor T1, diodes CR103 and CR104, resistors R1, R3, R4, R6 and R7, capacitors C1.1, C1.2, C2 and C3 form an oscillator circuit to generate the basic ringing frequency. The transistors are in the common emitter configuration with each emitter circuit completed by a portion of the oscillator tank inductor T1. By putting the oscillator tank inductor in the emitter circuit, a common connection between a positive feedback winding and a tank coil wind-

5. (continued)

ing is obtained. Additional taps of the LC tank inductor serve as drive connections to the driver amplifier.

Transistors Q104 and Q105, resistors R102, R105, R109, R110, R111 and R112, capacitors C109, C110 and primary windings of transformer T2 make up the driver amplifier stage. The transistors are operated class AB in a common emitter push-pull configuration. The output of the driver stage works into primary windings of driver transformer T2 to induce sufficient drive in T2 secondary windings for the operation of the power amplifier described below.

Transistors Q6, Q7, Q8 and Q9, resistors R17, R18, R19 and R20 and transformer T3 make up the power amplifier. The transistors are connected in a common emitter bridge configuration. The output of the power amplifier operates into primary windings of output transformer T3. The secondary winding of transformer T3 is tapped for selecting one of three nominal output voltages. Additional windings of transformer T3 provide voltage sensing for the overload circuit described below.

Transistor Q103, diodes CR102 and CR101, capacitor C4, resistors R15 and R17 and windings of transformer T3 make up the overload protection circuit. The overload protection circuit compares output current to output voltage. When output current tends to increase to an excessive value, this circuit limits the supply voltage to the oscillator; consequently, both the output voltage and current are decreased to a safe value.

Transistor Q10, transformer T4, diodes CR6, CR7 and CR8, resistors R24, R25, R27 and R28, and capacitor C12 make up the ringback tone generator circuit. This circuit consists of a LC tuned oscillator. The output of this oscillator is connected to the input of the ringing generator driver amplifier; consequently, is amplified along with the ringing oscillator signal.

The basic frequency generated in the ringback tone oscillator is 420 cycles; however, the supply voltage for the ringback oscillator is obtained at the output of the 20 cycle ringing generator. The supply frequency is doubled by the use of a full wave rectifier. The supply voltage variation of 40 cycles causes the ringback tone oscillator to be amplitude modulated at a 40 cycle rate; hence, the output is 420 cycles modulated at 40 cycles.

# ELECTRICAL PARTS LIST
# LORAIN MODEL T820R SUB-CYCLE
# SPEC. NO. 5153-311

The quantity of spare parts (except fuses) listed should be sufficient for ten or less SUB-CYCLEs for at least 18 months.

| Ref. Desig. | Lorain Products Corp. Part No. | Description | Quantity Rec. Spares |
|---|---|---|---|
| **ASSEMBLIES** | | | |
| | 4337-310 | Plug-in Card | ** |
| | 4338-014 | Printed Circuit Card | 1 |
| **CAPACITORS** | | | |
| C1-1 | 2713-188 | 1.5UF 100V | 1 |
| C1-2 | 2713-180 | 1UF 100V | 1 |
| C2 | 2713-218 | .01UF 200V | 1 |
| C3 | 2713-227 | .047UF 200V | 1 |
| C4 | 2731-142 | 100UF 12V Electrolytic | 1 |
| C5 | 2715-249 | .1UF 200V | 1 |
| C6 | 2713-227 | .047UF 200V | * |
| C7 | 2715-249 | .1UF 200V | * |
| C8 | 2713-339 | .47UF 400V | 1 |
| C11 | 2731-208 | 800UF 75V Electrolytic | 1 |
| **DIODE** | | | |
| CR5 | 2812-131 | Silicon 1N538 | 1 |
| **FUSES** | | | |
| | 2486-208 | 1.33A Alarm | 3 |
| **INDUCTOR** | | | |
| L1 | 4412-003 | Choke | - |
| **RESISTORS** | | | |
| R1 | 2683-255 | 500 Ohm 2W Variable | 1 |
| R3 | 2614-247 | 220 Ohm .5W Fixed | 1 |
| R4 | 2614-247 | 220 Ohm .5W Fixed | * |
| R6 | 2615-303 | 47K Ohm .5W Fixed | 1 |
| R7 | 2615-303 | 47K Ohm .5W Fixed | * |

* This part appears more than once in this list. Use recommended spare quantity stated where part first appears in this list.

** For Recommended Spares, refer to Electrical Parts List for this assembly.

# ELECTRICAL PARTS LIST
# LORAIN MODEL TB20R SUB-CYCLE
# SPEC. NO. 5153-311

| Ref. Desig. | Lorain Products Corp. Part No. | Description | Quantity Rec. Spares |
|---|---|---|---|
| **RESISTORS (CONT'D)** | | | |
| R8 | 2651-342 | 2.25K Ohm 3W Fixed | 1 |
| R13 | 2615-263 | 1.0K Ohm .5W Fixed | 1 |
| R14 | 2651-340 | 1.8K Ohm 3W Fixed | 1 |
| R15 | 2683-354 | 500 Ohm 2W Variable | 1 |
| R16 | 2683-362 | 1.5K Ohm 2W Variable | 1 |
| R17 | 2681-403 | 3 Ohm 10W Adjustable | 1 |
| R18 | 2615-239 | 100 Ohm .5W Fixed | 1 |
| R19 | 2615-245 | 180 Ohm .5W Fixed | 1 |
| R20 | 2615-239 | 100 Ohm .5W Fixed | * |
| R21 | 2615-231 | 47 Ohm .5W Fixed | 1 |
| R22 | 2615-245 | 180 Ohm .5W Fixed | * |
| R23 | 2656-319 | 500 Ohm 5W Variable | 1 |
| R26 | 2683-354 | 500 Ohm 2W Variable | * |
| **TRANSFORMERS** | | | |
| T1 | 4428-507 | Oscillator | - |
| T2 | 4474-502 | Driver | - |
| T3 | 4476-601 | Output | - |
| **TRANSISTORS** | | | |
| Q6 | 2848-151 | 2N174 | 2 |
| Q7 | 2848-151 | 2N174 | - |
| Q8 | 2848-151 | 2N174 | - |
| Q9 | 2848-151 | 2N174 | - |
| **MISCELLANEOUS** | | | |
| | 2488-958 | Fuseholder Cap | 1 |
| | 2488-959 | Fuseholder Body | 1 |
| | 2475-762 | Connector, Receptacle, 17 Contact | 1 |
| | 2475-747 | Connector, Plug-in, 15 Contact | 1 |

LORAIN PRODUCTS CORPORATION
Lorain, Ohio
February 10, 1969

[illegible]

[illegible]

The quantities [illegible] for one or less [illegible]

| Ref. Des. | Part Number | Description | Quantity |
|---|---|---|---|
| **CAPACITORS** | | | |
| C109 | 2713-412 | [illegible] | [illegible] |
| C110 | 2713-[illegible] | [illegible] | [illegible] |
| **DIODES** | | | |
| CR10[illegible] | 2411-411 | [illegible] | [illegible] |
| CR102 | 2411-41[illegible] | [illegible] | [illegible] |
| CR103 | 2411-204 | | [illegible] |
| CR104 | 2411-204 | | [illegible] |
| **RESISTORS** | | | |
| R102 | 2615-[illegible]7 | [illegible] | [illegible] |
| R105 | 2615-[illegible]7 | [illegible] | [illegible] |
| R109 | 2615-2[illegible] | [illegible] | [illegible] |
| R110 | 2615-263 | [illegible] | [illegible] |
| R111 | 2615-131 | [illegible] | [illegible] |
| R112 | 2615-[illegible] | [illegible] | [illegible] |
| **TRANSISTORS** | | | |
| Q101 | [illegible] | [illegible] | [illegible] |
| Q102 | 2847-[illegible] | [illegible] | [illegible] |
| Q103 | 2847-[illegible] | [illegible] | [illegible] |
| Q104 | 2847-[illegible] | [illegible] | [illegible] |
| Q105 | 2847-[illegible] | [illegible] | [illegible] |

*This part appears more than [illegible] quantity either where part [illegible] or [illegible].

[illegible]

## SHEET INDEX

| SHEET NO. | CONTENTS |
|---|---|
| 1 | SHEET INDEX<br>CIRCUIT NOTES<br>SUPPORTING INFORMATION<br>OPTION INDEX<br>INFORMATION NOTES |
| 2 | FIG 1 RINGING GENERATOR<br>FIG 2 POWER FILTER |

## OPTION INDEX

| APP OR WRG | LOCATION |
|---|---|
| | |

## CIRCUIT NOTES

101.

| DESIG | FUSE AMP | POTENTIAL | ONE PER |
|---|---|---|---|
| | | | |

| BATTERY SYMBOL | VOLTAGE RANGE |
|---|---|
| -48 | 46-52V |

102.

| FEATURE OR OPTION | PROVIDE | | |
|---|---|---|---|
| | FIG | APP OR WRG | QUANTITY |
| 0.15 AMP 20 CYCLE RINGING GENERATOR WITH RINGBACK TONE | 1,2 | | 1 PER RINGING GEN |

103.

| NETWORK VALUES | | |
|---|---|---|
| NETWORK NO. | RESISTANCE IN OHMS | CAPACITANCE IN UF |
| | | |

104.

| RECORD OF FIGURES, WIRING AND APPARATUS CHANGES | | | | | | | |
|---|---|---|---|---|---|---|---|
| CHANGED ON ISS | IF JOB RECORDS DO NOT SPECIFY | THIS OPTION WAS FURN | SEE NOTE | USE IN CIRCUIT | | | |
| | | | | STD | A&M | MD | SPL |
| | | | | | | | |

105. TERMINAL 13 ON TRANSFORMER (T3) IS USED ONLY AS A WIRING TIE POINT AND HAS NO INTERNAL CONNECTION.

## SUPPORTING INFORMATION

| CATEGORY | NO. |
|---|---|
| EQUIPMENT ARRANGEMENT | J5153-311 |

## INFORMATION NOTES

101. UNLESS OTHERWISE SPECIFIED, RESISTANCE VALUES ARE IN OHMS, CAPACITANCE VALUES ARE IN MICROFARADS.

11-10-64

| DWG. ISS. | CHG NO. | DATE | DRAWN BY | APPD. BY |
|---|---|---|---|---|
| 1 | | M | | |
| 2 | 14759 | 12-14-65<br>12-17-65 | K. Kerney<br>M | 12-20-65<br>12-21-65 |

IN FIG 1, ASSEM CODE NO. OF RINGBACK TONE GENERATOR WAS SHOWN AS "4438-014".
CN 19010 1-27-69

| | | | | |
|---|---|---|---|---|
| 3 | H L D | | | 2-12-69 |

ISSUE 3

SD-1877-01

POWER SYSTEMS

SOLID STATE
RINGING GENERATOR CIRCUIT

MODEL TB20R SUB-CYCLE CONVERTER
48V DC INPUT
0.15 AMP 20 CYCLE OUTPUT
WITH RINGBACK TONE

5153-311

| | | |
|---|---|---|
| DRAWN BY | | DATE 11-10-64 |
| CHECKED BY | | DATE |
| APPROVED BY | | DATE 11-13-64 |
| APPROVED BY | | DATE 11-24-64 |

RATING: STANDARD

SD-1877-01

LORAIN PRODUCTS CORPORATION
LORAIN, OHIO
LORAIN PRODUCTS (CANADA) LTD, ST. THOMAS, ONTARIO

DWG SIZE: D

2 SHEETS

SHEET 1

PRINTED IN U.S.A.

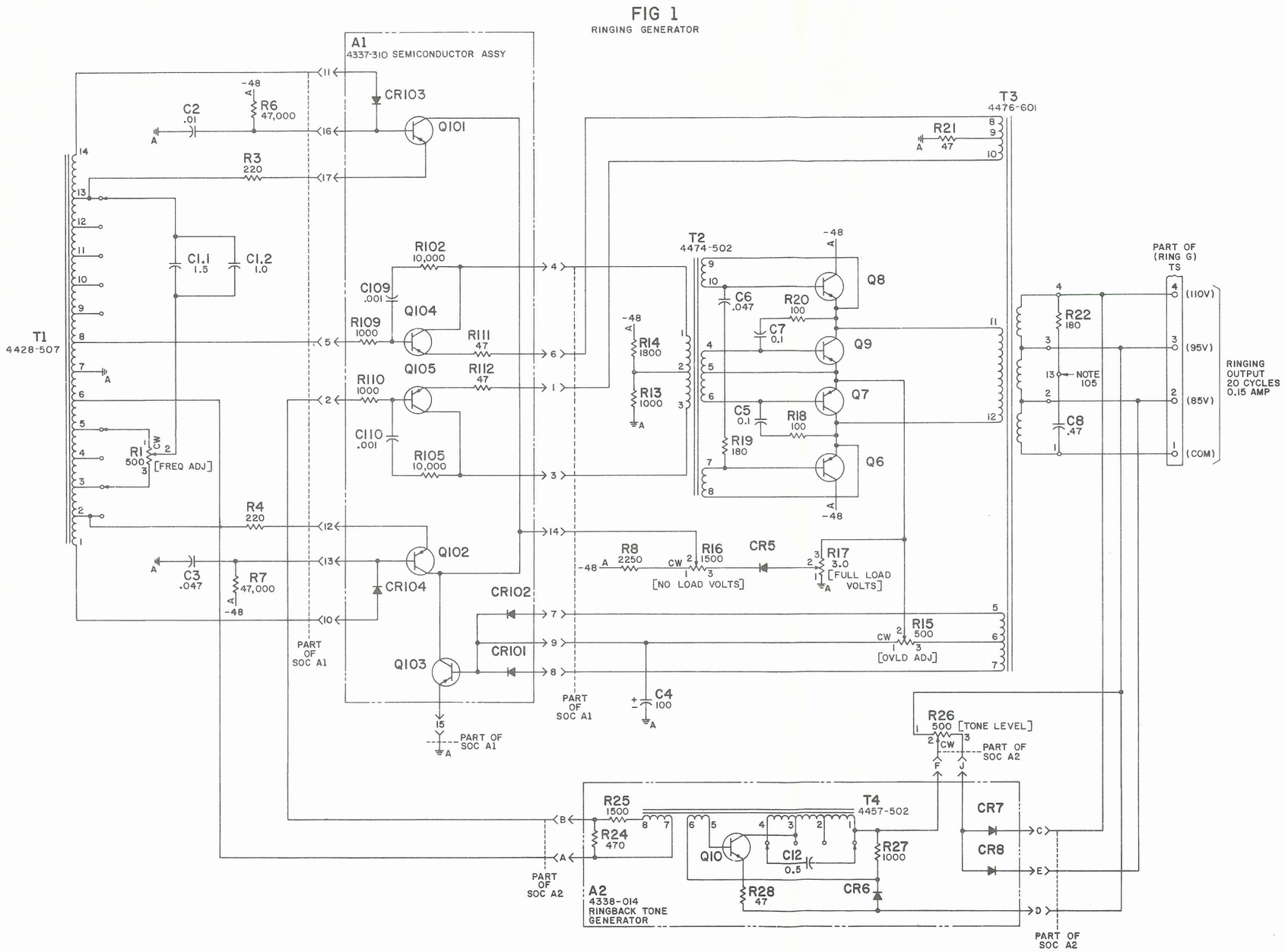


FIG 2
POWER FILTER

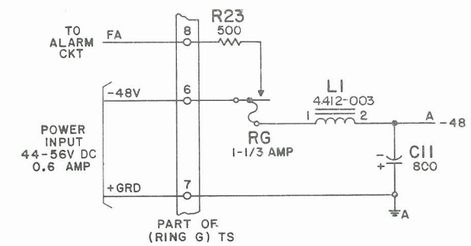


| DRAWING ISSUE | |
|---|---|
| 1 | B. of REF M |
| 2 | 1-14-66 |
| 3 | 7-22 REF M |

ISSUE 3

RINGING GENERATOR CIRCUIT

5153-311

SD-1877-01

LORAIN PRODUCTS CORPORATION | DWG SIZE D | 2 SHEETS | PRINTED IN U.S.A. | SHEET 2

| TABLE A | | | | | | | | |
|---|---|---|---|---|---|---|---|---|
| SD-T DWG CROSS REFERENCE & FIGURE LOCATION TABLE | | | | | | | | |
| ITEMS IN PARENTHESES ARE FOR INFORMATION ONLY AND ARE NOT TO BE RECORDED ON JOB WIRING LIST DRAWING | | | | | | | | |
| LINE | SD-1877-01 | | | T-1877-11 | | | | REMARKS |
| | SHEET | FIG | OPT | FIG | WRG | APP | SHEET | |
| 1 | 2 | 1 | | 1 | | | 2 | |
| | 2 | 2 | | 1 | | | 2 | |
| | | | | | | | | |
| | | | | | | | | |
| 5 | | | | | | | | |
| | | | | | | | | |
| | | | | | | | | |
| | | | | | | | | |
| | | | | | | | | |
| 10 | | | | | | | | |
| | | | | | | | | |
| | | | | | | | | |
| | | | | | | | | |
| | | | | | | | | |
| 15 | | | | | | | | |
| | | | | | | | | |
| | | | | | | | | |

| TABLE B | | | | | | | | |
|---|---|---|---|---|---|---|---|---|
| RECORD OF FIGURES, APPARATUS AND WIRING CHANGES | | | | | | | | |
| CHANGED ON ISSUE | IF OFFICE RECORDS | | THIS OPTION WAS FURNISHED | SEE ENG NOTE | RATING | | | |
| | SPECIFY | DO NOT SPECIFY | | | STD | A&M | MD | SPL |
| | | | | | | | | |
| | | | | | | | | |
| | | | | | | | | |
| | | | | | | | | |

ENGINEERING NOTES

51. THIS DRAWING AGREES WITH

| | | | | | | | | | | | | | |
|---|---|---|---|---|---|---|---|---|---|---|---|---|---|
| ISSUE | 1 | 2 | 3 | 4 | | | | | | | | | |
| ISSUE | 1 | 1 | 2 | 3 | | | | | | | | | |

52. EQUIPMENT ARRANGEMENT PER J5153-311

| SHOP | INST | MANUFACTURING NOTES |
|---|---|---|
| X | | 1. COLOR CODED LEADS TO BE 24 GA EXCEPT AS NOTED, LEADS NOT COLOR CODED TO BE BARE 20 GA SOLID. |
| X | | 2. BI-TERMINAL NEAREST PANEL. |
| X | | 3. a-LEADS INSULATED WITH VARNISHED CAMBRIC SLEEVING. |
| X | | 4. AT-LEADS CONNECTED AFTER TEST BY SHOP. |
| X | | 5. LEADS SHOWN TERMINATED IN COMPONENTS WITHOUT TERMINALS ARE FURNISHED WITH COMPONENTS. |
| X | | 6. D-WIRING NOT INCLUDED IN LOCAL CABLE FORM BUT RUN AS SEPARATE LEADS. |
| X | | 7. PTa-PIGTAIL LEADS INSULATED WITH VARNISHED CAMBRIC SLEEVING. |

| | | | | |
|---|---|---|---|---|
| | | | M | 11-20-64 1 |
| (T3) WAS SHOWN AS 1699G. CHANGE ORDER 13048 3-15-65 | | | | |
| MCL | | R Pavelka 3-16-65 | R W Howell 3-22-65 M | 2 |
| (C8) WAS 2713-338. CHANGE ORDER 18947 | | | M 12-19-68 | |
| LGM | 1-2-69 1-6-69 | A Mucha R. Libbey | [illegible] 2-69 | 3 |
| APP LOC. 19, ASSEM CODE NO. OF RINGBACK TONE GENERATOR WAS SHOWN AS "4438-014." CN 19010 | | | M 1-27-69 | |
| D.R.D | | | R Pavelka 2-12-69 | 4 |

| TABLE C | | | | | | | | |
|---|---|---|---|---|---|---|---|---|
| FEATURE TABLE | | | | | | | | |
| ITEM | | FEATURE | SPECIFY T-1877-11 | | | | AUTOMATIC | REMARKS |
| | | | FIG | QUAN | WRG | APP | | |
| 1 | | 0.15 AMP 20 CYCLE RINGING GENERATOR WITH RINGBACK TONE | 1 | 1 | | | | |
| | | | | | | | | |

| PIGTAIL COMPONENT INFORMATION | | | | |
|---|---|---|---|---|
| DESIG | PT NO. | VALUE OR CODE NO. | RATING | NEAREST LOC NO. |
| | CAPACITORS | | | |
| C1.1 | 2713-188 | 1.5 | 100V | 09 |
| C1.2 | 2713-180 | 1.0 | 100V | 09 |
| C2 | 2713-218 | .01 | 200V | 03 |
| C3,6 | 2713-227 | .047 | 200V | 02 |
| C4 | 2731-142 | 100 | 12V | 03 |
| C5,7 | 2715-249 | 0.1 | 200V | 02 |
| C8 | 2713-339 | 0.47 | 400V | 00 |
| | DIODES | | | |
| CR5 | 2812-131 | | | 02 |
| | RESISTORS | | | |
| R3,4 | 2614-247 | 220 | 0.5W | 03 |
| R6,7 | 2615-303 | 47,000 | 0.5W | 03 |
| R8 | 2651-342 | 2250 | 3W | 03 |
| R13 | 2615-263 | 1000 | 0.5W | 03 |
| R14 | 2651-340 | 1800 | 3W | 03 |
| R18,20 | 2615-239 | 100 | 0.5W | 03 |
| R19 | 2615-245 | 180 | 0.5W | 03 |
| R22 | | | | 00 |
| R21 | 2615-231 | 47 | 0.5W | 03 |
| R23 | 2656-319 | 500 | 5W | 17 |

INFORMATION NOTES

101. UNLESS OTHERWISE SPECIFIED, RESISTANCE VALUES ARE IN OHMS, CAPACITANCE VALUES ARE IN MICROFARADS.



ISSUE 4

T-1877-11

POWER SYSTEMS

SOLID STATE
RINGING GENERATOR CIRCUIT

MODEL TB20R SUB-CYCLE CONVERTER
48V DC INPUT
0.15 AMP 20 CYCLE OUTPUT
WITH RINGBACK TONE

5153-311

| | |
|---|---|
| DRAWN BY B. Lewis | DATE 11-20-64 |
| CHECKED BY [illegible] | DATE 11-23-64 |
| APPROVED BY C | DATE |
| APPROVED BY R W Howell | DATE 11-24-64 |
| RATING STANDARD | |
| T-1877-11 | |

LORAIN PRODUCTS CORPORATION
LORAIN, OHIO
LORAIN PRODUCTS (CANADA) LTD., ST. THOMAS, ONTARIO

DWG SIZE D | 2 SHEETS | SHEET 1

PRINTED IN U.S.A.

# FIG I

RINGING GENERATOR CKT

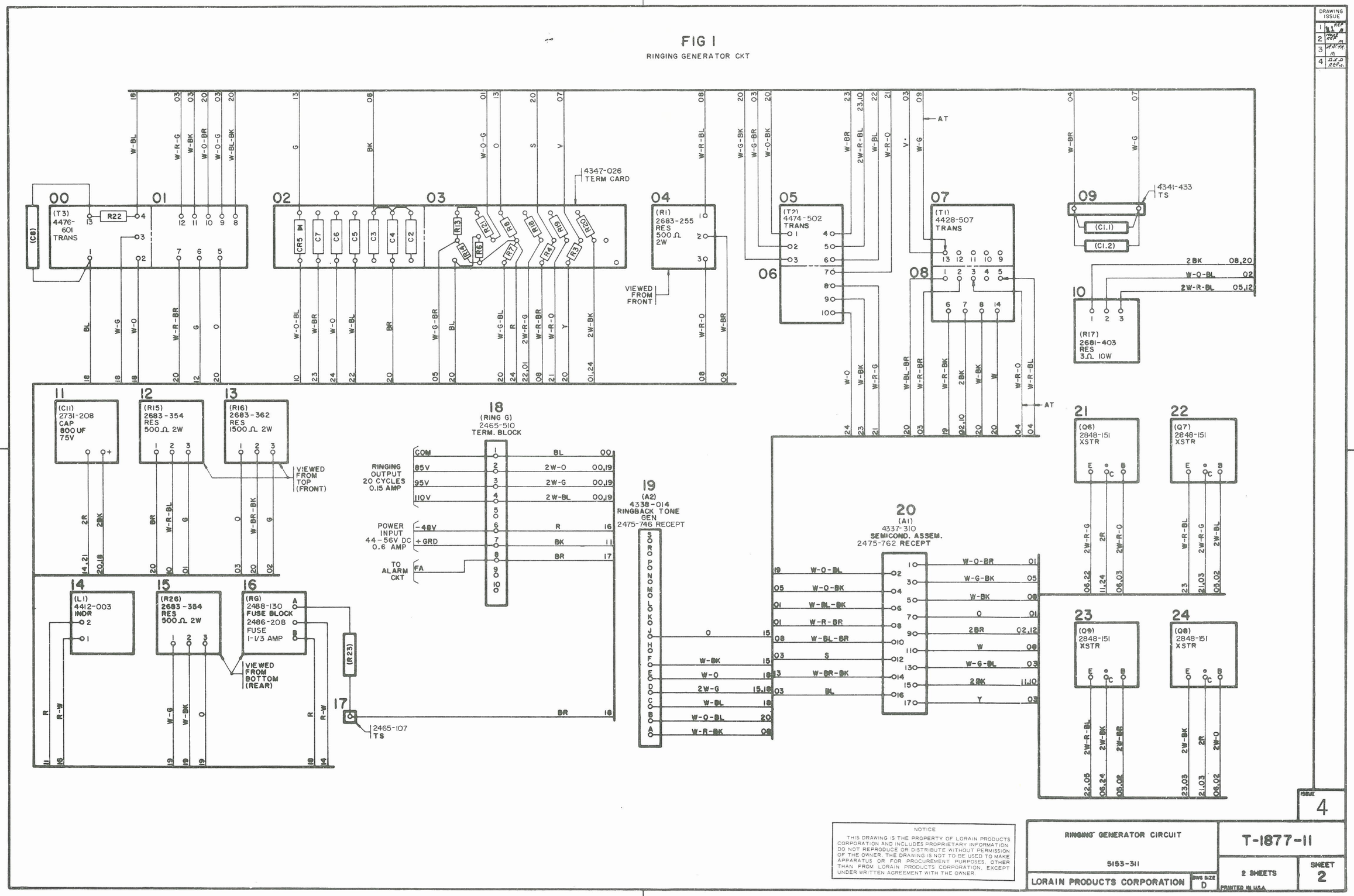


NOTICE

THIS DRAWING IS THE PROPERTY OF LORAIN PRODUCTS CORPORATION AND INCLUDES PROPRIETARY INFORMATION. DO NOT REPRODUCE OR DISTRIBUTE WITHOUT PERMISSION OF THE OWNER. THE DRAWING IS NOT TO BE USED TO MAKE APPARATUS OR FOR PROCUREMENT PURPOSES, OTHER THAN FROM LORAIN PRODUCTS CORPORATION, EXCEPT UNDER WRITTEN AGREEMENT WITH THE OWNER.

RINGING GENERATOR CIRCUIT

5153-311

LORAIN PRODUCTS CORPORATION

DWG SIZE D

PRINTED IN U.S.A.

T-1877-11

2 SHEETS

SHEET 2