CAPACITY: LINES 2800 MULTIPLE : 2800

FIG. 1

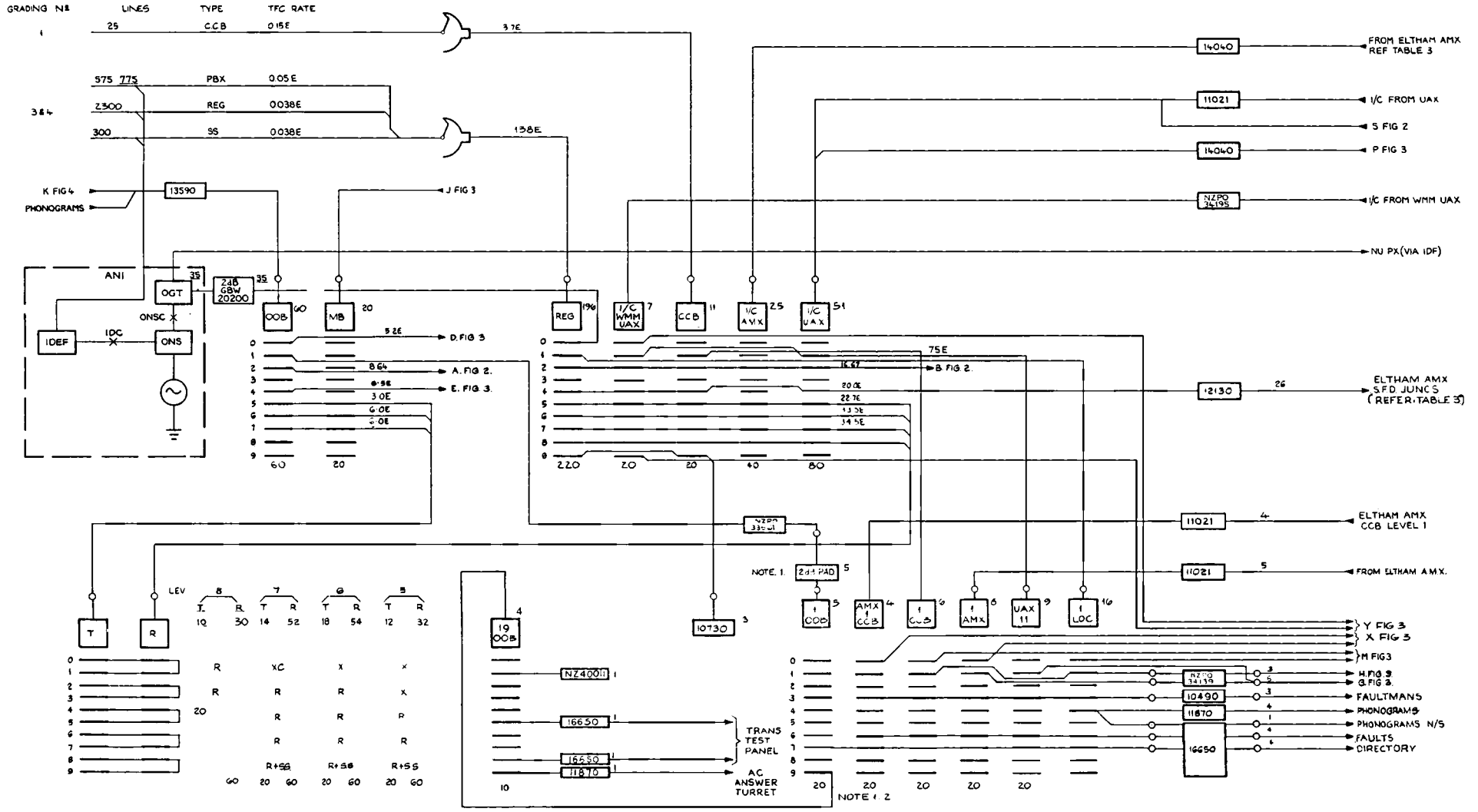

REFERENCES:-
FOR TRUNKING & EQUIPMENT DRG. SEE S.T.C. L 183160.
FOR OBJECTIVE TRAFFIC DIAGRAM SEE N.Z.P.O. 28299
STANDARD SYMBOLS N.Z.P.O. 36794.

NOTATIONS -
QUANTITIES SHOWN - EXISTING, PROPOSED

NOTES -
1.1 24B PADS TO N.Z.P.O. 37762 FIG 10
1.2 OOB X AMX CCB LEV 1 2 WORKS MAKE 1A SHELVES A & B

CURRENT TRAFFIC DIAGRAM STRATFORD C.A.X.

CEL	CKD	APD	ORDER	DATE	NO	CHANGE

NZPO
DISTRICT ENGINEER NEW PLY OUT
COY Nº: ORIGIN DE
DRAWN T. SOPT TRACED: R.T.
1 of 3
A2
NU 3171

FIG. 2 JUNCTION TANDEM

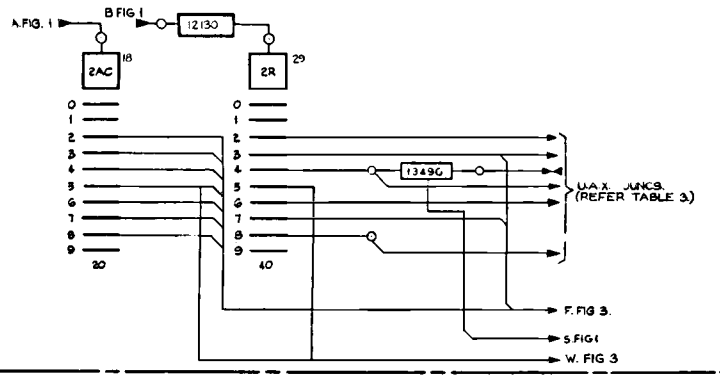

FIG.4. A.C. RELAY SETS.

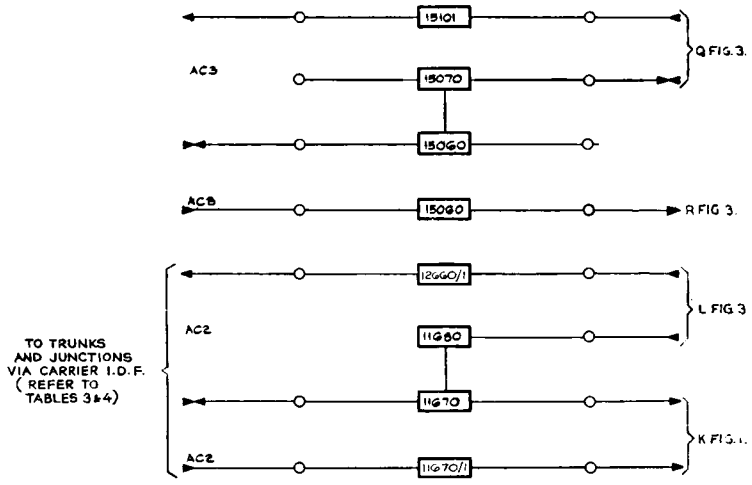

FIG. 3 T.M.X.

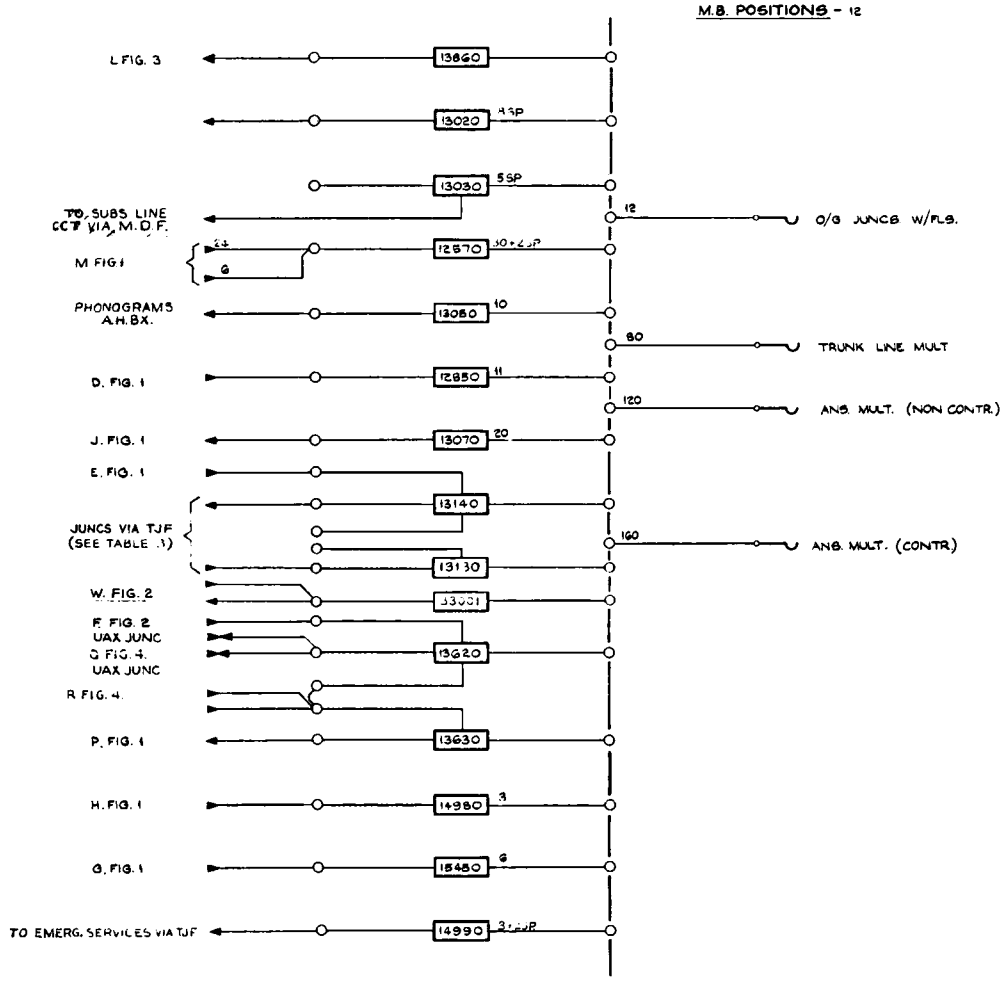

NOTES & REFERENCES:-

SEE SHEET 1

CURRENT TRAFFIC DIAGRAM STRATFORD C.A.X.

DEL	CKD	APD	ORDER	DATE	ISS	CHANGE
[illegible]	[illegible]	[illegible]	[illegible]	[illegible]	[illegible]	[illegible]
[illegible]	[illegible]	[illegible]	[illegible]	[illegible]	A	PREV. A.C. 139 & AMENDED
[illegible]	[illegible]	[illegible]	[illegible]	[illegible]	B	FIG 4. RELAY VALUE CHANGED
[illegible]	[illegible]	[illegible]	[illegible]	[illegible]	C	SHTS 1 & 3 AND 15 REDRAWN
[illegible]	[illegible]	[illegible]	[illegible]	[illegible]	D	AMENDED FOR PS 66/SE ADDN 1.
[illegible]	[illegible]	[illegible]	[illegible]	[illegible]	E	SHT 1 AMENDED
[illegible]	[illegible]	[illegible]	[illegible]	[illegible]	F	SHTS 1 & 3 AMENDED
[illegible]	[illegible]	[illegible]	[illegible]	[illegible]	G	SHT 1 AMENDED

N.Z.P.O.
DISTRICT ENGINEER NEW PLYMOUTH

COY. NO: 2 OF 3
ORIGN:
DRAWN: T-EQPT
TRACED A.T.
A2
NU 3171