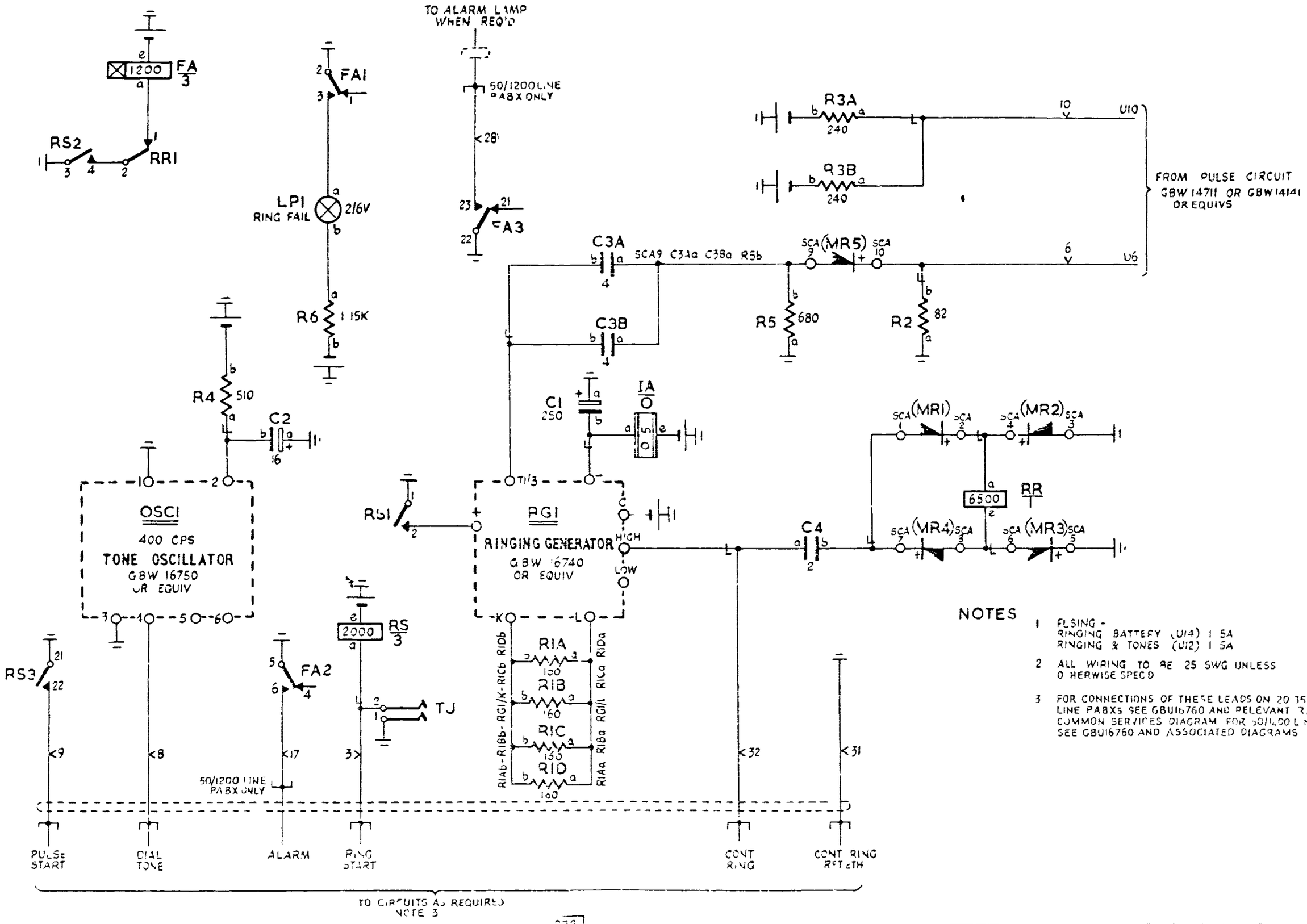

NOTES

1. FUSING -
   RINGING BATTERY (U14) 1 5A
   RINGING & TONES (U12) 1 5A
2. ALL WIRING TO BE 25 SWG UNLESS OTHERWISE SPEC'D
3. FOR CONNECTIONS OF THESE LEADS ON 20 35 & 49 LINE PABXS SEE GBU16760 AND RELEVANT RACK COMMON SERVICES DIAGRAM FOR 50/1200 LINE PABXS SEE GBU16760 AND ASSOCIATED DIAGRAMS

BATT W U12 RS2 FA2 IA2 R6b
BATT W U14 R3Ab R3Bb RG1c
BATT W U20 R4b

EARTH R U11 R2a SCA3 SCA5 C1a RS21 RS3 FA22 FA2 FA5 R5a TJ1
EARTH R U9 OSC1/1 C2a
EARTH R U13 OSC1/3 RS1

R&T BATT BK FUSE — 132 — U12
RINGING BATT BK FUSE — U14
EARTH R LTH BAR — 1A2 — U11, U31
EARTH R LTH BAR — 2A2 — U9
EARTH R LTH BAR — U13

PABX
RINGING & TONES CIRCUIT

GBW 16760

NZPO