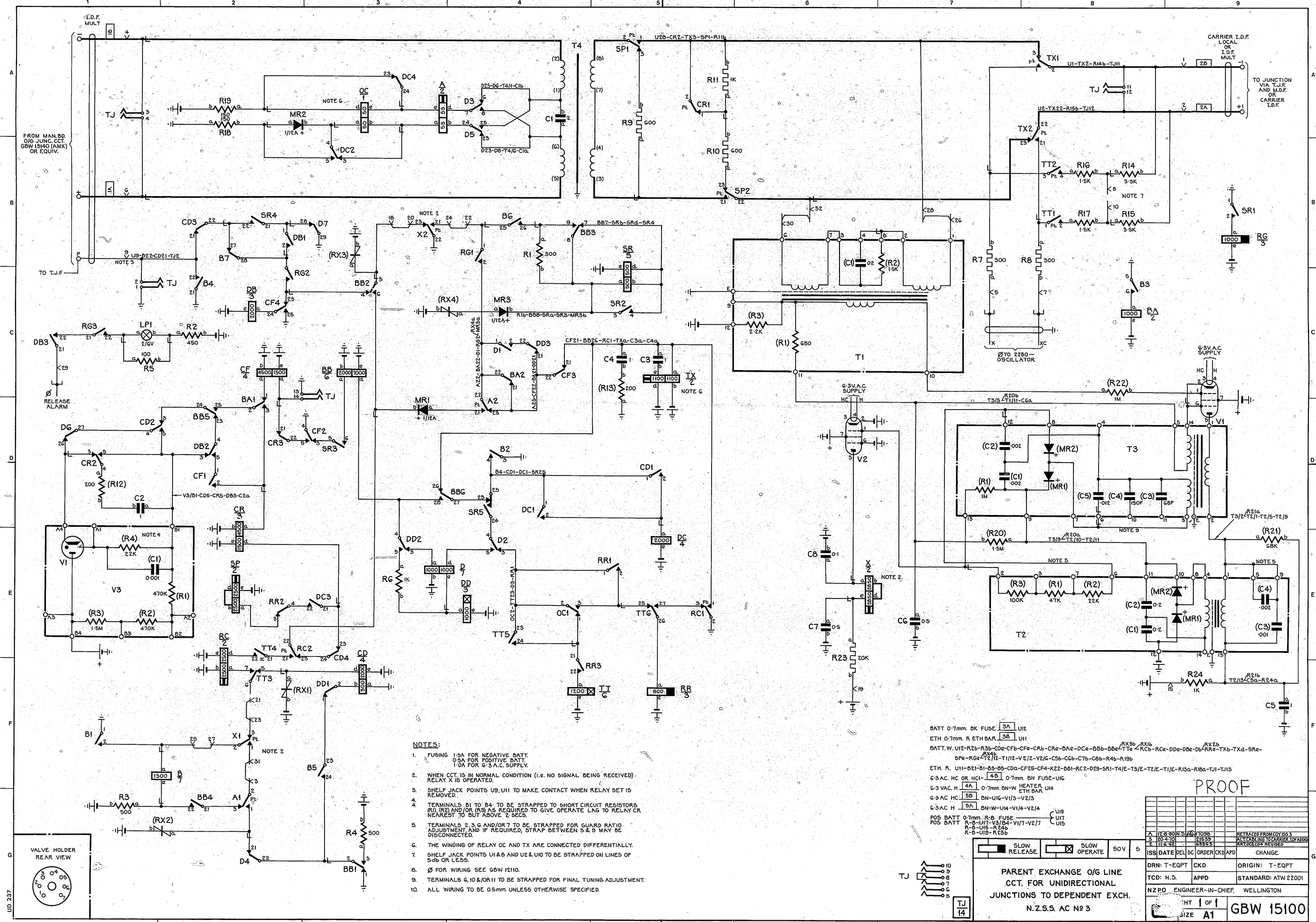

NOTES:

1. FUSING 1·5A FOR NEGATIVE BATT.
   0·5A FOR POSITIVE BATT.
   1·0A FOR 6·3 A.C. SUPPLY.
2. WHEN CCT. IS IN NORMAL CONDITION (i.e. NO SIGNAL BEING RECEIVED) RELAY X IS OPERATED.
3. SHELF JACK POINTS U9, U11 TO MAKE CONTACT WHEN RELAY SET IS REMOVED.
4. TERMINALS B1 TO B4 TO BE STRAPPED TO SHORT CIRCUIT RESISTORS (R1), (R2) AND/OR (R3) AS REQUIRED TO GIVE OPERATE LAG TO RELAY CR NEAREST TO BUT ABOVE 2 SECS.
5. TERMINALS 2, 3, G AND/OR 7 TO BE STRAPPED FOR GUARD RATIO ADJUSTMENT, AND IF REQUIRED, STRAP BETWEEN 5 & 9 MAY BE DISCONNECTED.
6. THE WINDING OF RELAY OC AND TX ARE CONNECTED DIFFERENTIALLY.
7. SHELF JACK POINTS U1 & 8 AND U2 & U10 TO BE STRAPPED ON LINES OF 5db OR LESS.
8. Ø FOR WIRING SEE GBW 12110.
9. TERMINALS 6, 10 & /OR 11 TO BE STRAPPED FOR FINAL TUNING ADJUSTMENT.
10. ALL WIRING TO BE 0.5mm. UNLESS OTHERWISE SPECIFIED.

BATT 0·7mm. BK FUSE 3A U12
ETH 0·7mm. R ETH BAR 3B U11
BATT. W. U12-R2b-R3b-CD2-CF6-CF2-CR6-CR2-BA2-DC2-BB6-BB2-TT2-RX3b/RX1b-RC6-RC2-DD2-DB2-DB2-RX2b-RR2-TX6-TX2-SR2-SP2-RG2-RX4b/T2/12-T1/12-V2/2-V2/6-C5b-C6b-C7b-C6b-R4b-R19b
ETH. R. U11-B2-B1-B3-B5-CD2-CF25-CF4-X22-BB1-RC2-D29-SR1-T4/E-T3/E-T2/E-T1/E-R13a-R18a-TJ1-TJ13
6·3 AC. HC OR HC1- 4B 0·7mm. BN FUSE U16
6·3 VAC. H 4A 0·7mm. BN-W HEATER ETH BAR U14
6·3 AC HC 5B BN-U16-V1/3-V2/3
6·3 AC H 5A BN-W-U14-V1/4-V2/4
POS BATT 0·7mm. R-B FUSE U19
POS BATT R-B-U17-V3/B4-V1/7-V2/7 U17
R-B-U15-R24b U15
R-B-U19-R23b

PROOF

ISS	DATE	DEL	DC	ORDER	CKD	APD	CHANGE
A	12-8-80	N.S.		H.T.098			RETRACED FROM CO Y 155.3
B	20-4-70			21555			ALT. CABLING TO CARRIER I.D.F. ADDED
C	11-4-68			45555			RAT. 253 CO* REVISED

SLOW RELEASE | SLOW OPERATE | 50V | S

PARENT EXCHANGE O/G LINE CCT. FOR UNIDIRECTIONAL JUNCTIONS TO DEPENDENT EXCH. N.Z.S.S. AC Nº 3

DRN: T-EQPT	CKD	ORIGIN: T-EQPT
TCD: N.S.	APPD	STANDARD: ATW 22001
NZPO ENGINEER-IN-CHIEF, WELLINGTON		
SHEET 1 OF 1 SIZE A1		GBW 15100

TJ 14

Centimetres