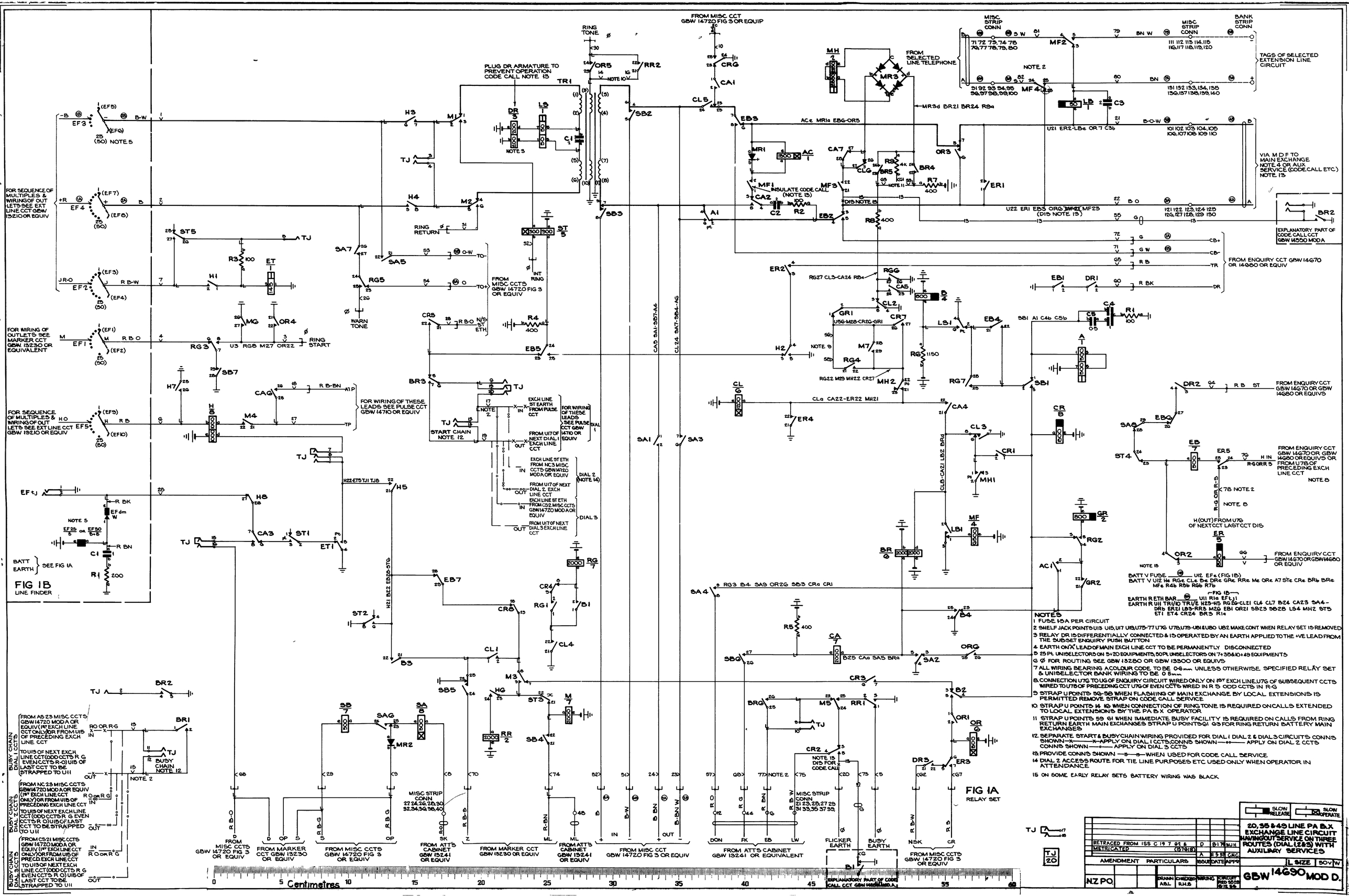
FIG 1B
LINE FINDER
FIG 1A
RELAY SET
FROM MISC CCT GBW 14720 FIG 3 OR EQUIP
PLUG DR ARMATURE TO PREVENT OPERATION CODE CALL NOTE 13
FROM SELECTED LINE TELEPHONE
MISC STRIP CONN
BANK STRIP CONN
TAGS OF SELECTED EXTENSION LINE CIRCUIT
VIA M D F TO MAIN EXCHANGE NOTE 4 OR AUX SERVICE (CODE CALL ETC) NOTE 13
EXPLANATORY PART OF CODE CALL CCT GBW 14550 MOD A
FROM ENQUIRY CCT GBW 14670 OR 14680 OR EQUIV
FOR SEQUENCE OF MULTIPLES & WIRING OF OUTLETS SEE EXT LINE CCT GBW 13210 OR EQUIV
FOR WIRING OF OUTLETS SEE MARKER CCT GBW 13230 OR EQUIVALENT
FOR WIRING OF THESE LEADS SEE PULSE CCT GBW 14710 OR EQUIV
START CHAIN NOTE 12
BATT EARTH SEE FIG 1A
BUSY CHAIN DIAL 1 CCTS
BUSY CHAIN DIAL 2 CCTS
BUSY CHAIN DIAL 3 CCTS
FROM MISC CCTS GBW 14720 FIG 3 OR EQUIV
FROM MARKER CCT GBW 13230 OR EQUIV
FROM ATT'S CABINET GBW 13241 OR EQUIV
FROM MISC CCT GBW 14720 FIG 3 OR EQUIV
FROM ATT'S CABINET GBW 13241 OR EQUIVALENT
FLICKER EARTH
BUSY EARTH
EXPLANATORY PART OF CODE CALL CCT GBW 14550 MOD A
FROM ENQUIRY CCT GBW 14670 OR GBW 14680 OR EQUIVS
FROM ENQUIRY CCT GBW 14670 OR GBW 14680 OR EQUIVS OR FROM U78 OF PRECEDING EXCH LINE CCT
FROM ENQUIRY CCT GBW 14670 OR GBW 14680 OR EQUIV
BATT V FUSE U12 EFe (FIG 1B)
BATT V U12 He RGe CLe Be DRe GRe RRe Me ORe A7 STe CRe BRb BRe MFe R4b R5b R6b R7b
EARTH R ETH BAR U11 R1a EFt,j1
EARTH R U11 TR1/10 TR1/E H25-H5 RG26-CL21 CL4 CL7 B24 CA23 SA4-DRb ER21 LB3-RR3 M26 EB1 OR21 SB23 SB28 LS4 MH2 ST5 ET1 ET4 CR24 BR3 R1a
NOTES
1 FUSE 1·5A PER CIRCUIT
2 SHELF JACK POINTS U13 U15, U17 U19, U75-77 U76 U78, U79-U81 & U80 U82 MAKE CONT WHEN RELAY SET IS REMOVED
3 RELAY DR IS DIFFERENTIALLY CONNECTED & IS OPERATED BY AN EARTH APPLIED TO THE +VE LEAD FROM THE SUBSET ENQUIRY PUSH BUTTON
4 EARTH ON "A" LEAD OF MAIN EXCH LINE CCT TO BE PERMANENTLY DISCONNECTED
5 25 Pt UNISELECTORS ON 5+20 EQUIPMENTS, 50 Pt UNISELECTORS ON 7+35 & 10+49 EQUIPMENTS
6 Ø FOR ROUTING SEE GBW 13280 OR GBW 13300 OR EQUIVS
7 ALL WIRING BEARING A COLOUR CODE TO BE 0·6mm UNLESS OTHERWISE SPECIFIED RELAY SET & UNISELECTOR BANK WIRING TO BE 0·5mm
8 CONNECTION U76 TO U6 OF ENQUIRY CIRCUIT WIRED ONLY ON 1ST EXCH LINE. U76 OF SUBSEQUENT CCTS WIRED TO U78 OF PRECEDING CCT U76 OF EVEN CCTS WIRED IN R S ODD CCTS IN R-G
9 STRAP U POINTS 56-58 WHEN FLASHING OF MAIN EXCHANGE BY LOCAL EXTENSIONS IS PERMITTED REMOVE STRAP ON CODE CALL SERVICE
10 STRAP U POINTS 14 16 WHEN CONNECTION OF RING TONE IS REQUIRED ON CALLS EXTENDED TO LOCAL EXTENSIONS BY THE PA B X OPERATOR
11 STRAP U POINTS 59 61 WHEN IMMEDIATE BUSY FACILITY IS REQUIRED ON CALLS FROM RING RETURN EARTH MAIN EXCHANGES STRAP U POINTS 61 63 FOR RING RETURN BATTERY MAIN EXCHANGES
12 SEPARATE START & BUSY CHAIN WIRING PROVIDED FOR DIAL 1 DIAL 2 & DIAL 3 CIRCUITS CONNS SHOWN —x——x— APPLY ON DIAL 1 CCTS, CONNS SHOWN —o—o— APPLY ON DIAL 2 CCTS CONNS SHOWN —o—o— APPLY ON DIAL 3 CCTS
13 PROVIDE CONNS SHOWN —B—B— WHEN USED FOR CODE CALL SERVICE
14 DIAL 2 ACCESS ROUTE FOR TIE LINE PURPOSES ETC USED ONLY WHEN OPERATOR IN ATTENDANCE
15 ON SOME EARLY RELAY SETS BATTERY WIRING WAS BLACK
SLOW RELEASE
SLOW OPERATE
20, 35 & 49 LINE PA B.X EXCHANGE LINE CIRCUIT HAVING OUT SERVICE ON THREE ROUTES (DIAL 1, 2 & 3) WITH AUXILIARY SERVICES
RETRACED FROM ISS C 19 7 02 & METRICATED (1576/18)
AMENDMENT PARTICULARS
ISSUE DATE APPR
NZ PO
DRAWN A.S.L.
CHECKED R.H.S.
WIRING
CIRCUIT RED 3528 19.12.56
L SIZE 50V W
GBW 14690 MOD D.
Centimetres