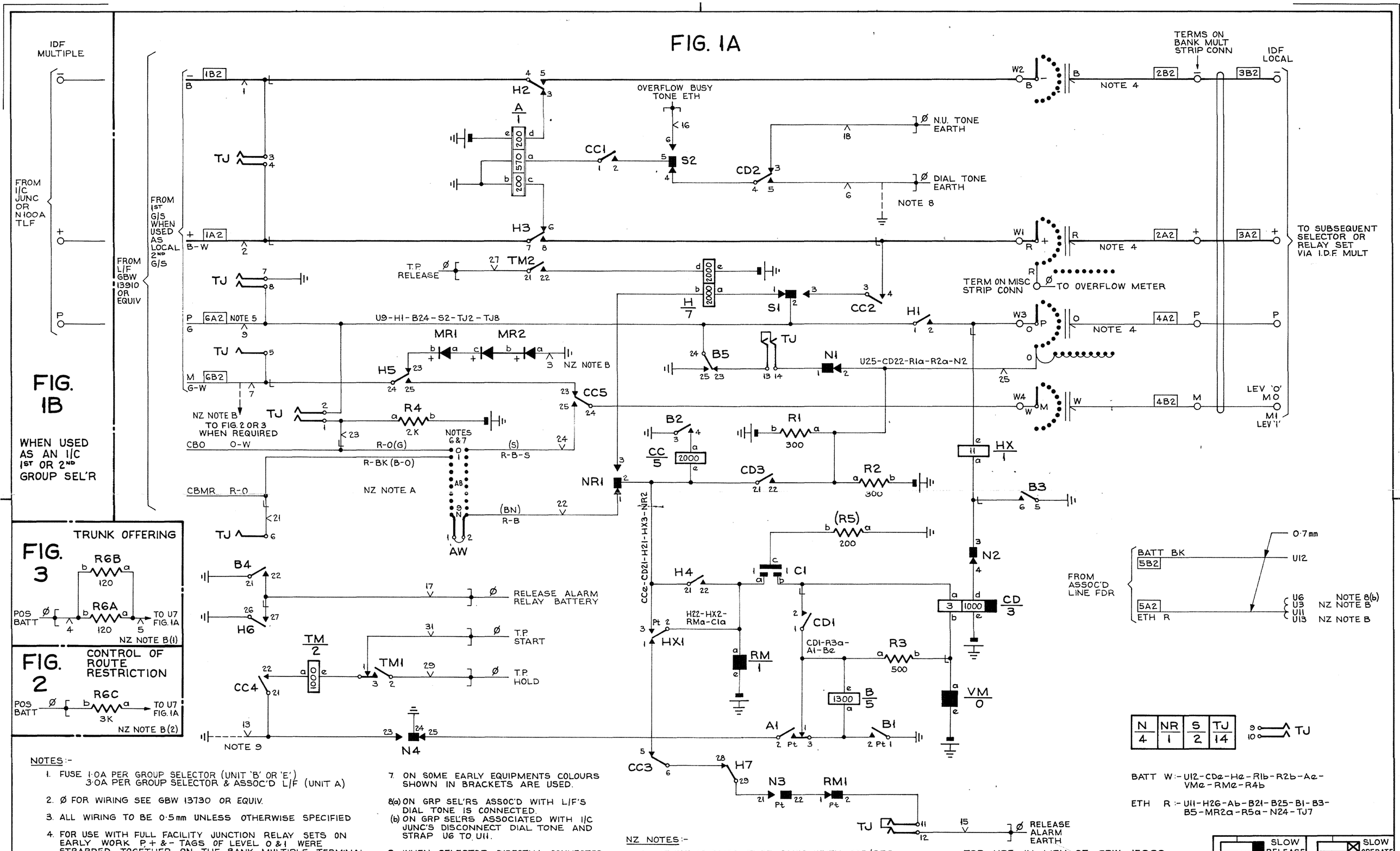

NOTES:-

1. FUSE 1·0A PER GROUP SELECTOR (UNIT 'B' OR 'E')
   3·0A PER GROUP SELECTOR & ASSOC'D L/F (UNIT A)
2. Ø FOR WIRING SEE GBW 13730 OR EQUIV.
3. ALL WIRING TO BE 0·5mm UNLESS OTHERWISE SPECIFIED
4. FOR USE WITH FULL FACILITY JUNCTION RELAY SETS ON EARLY WORK P+ & - TAGS OF LEVEL 0 & 1 WERE STRAPPED TOGETHER ON THE BANK MULTIPLE TERMINAL STRIP AND A5 WIRE CIRCUIT TO THE I.D.F. WAS PROVIDED.
5. SHELF JACK POINTS 9 & 11 TO MAKE CONTACT WHEN SELECTOR IS REMOVED.
6. TYPICAL ALLOCATION OF AUX BANK CONTACTS.

	ON APPROPRIATE LEVEL	
	STRAP AB1 TO	STRAP AB2 TO
UNIT FEE	U21	U24
AUTO ROUTE BARRED	U21	U22
SPARE LEVEL	U23	U22

7. ON SOME EARLY EQUIPMENTS COLOURS SHOWN IN BRACKETS ARE USED.

8(a) ON GRP SEL'RS ASSOC'D WITH L/F'S DIAL TONE IS CONNECTED.
(b) ON GRP SEL'RS ASSOCIATED WITH I/C JUNC'S DISCONNECT DIAL TONE AND STRAP U6 TO U11.

9. WHEN SELECTOR DIRECTLY CONNECTED TO AN I/C JUNCTION DISCONNECT U13 TO U11 TO PREVENT TIME-OUT IN PRE-STEPPING CONDITION.

NZ NOTES:-

A AT UAX-CB BMSB TYPE CAX'S WHEN CCB/REG DISCRIMINATION IS REQUIRED ON I/C JUNCTION DEMAND CALLS VIA LEV '0' & LEV 9 RESPECTIVELY. THE VERTICAL MARKING BANK WIRING IS TO BE CHANGED AS FOLLOWS:
(i) REMOVE WIRE FROM U23 TO AB1 LEV 0 & CONNECT U23 TO AB1 LEV 9
(ii) WIRE U25 TO AB1 LEV 0
(iii) STRAP AB2 LEV 0 & LEV 9

B WHEN USED AS A DIRECT I/C SELR THE TWO FOLLOWING CONDITIONS COULD APPLY:
(i) FOR TRUNK OFFERING PROVIDE FIG. 3 AND DELETE STRAP U3 TO U11
(ii) FOR CONTROL OF ROUTE RESTRICTION PROVIDE FIG. 2 AND DELETE U3 TO U11

FOR USE IN LIEU OF GBW 15960

SLOW RELEASE | SLOW OPERATE

U.A.X. № NZ 13
GROUP SELECTOR

PREPARED FROM GBW 13890 ISS 8C (55855)	A	22·3·76	CJW
AMENDMENT PARTICULARS	ISS	DATE	APD

REF: | SIZE A2 | 50V | H

NZPO | DRAWN T-EQPT | CHECKED | WIRING P.E. | CIRCUIT T-EQPT

GBW 13890 MOD A