FIG. 1.A.

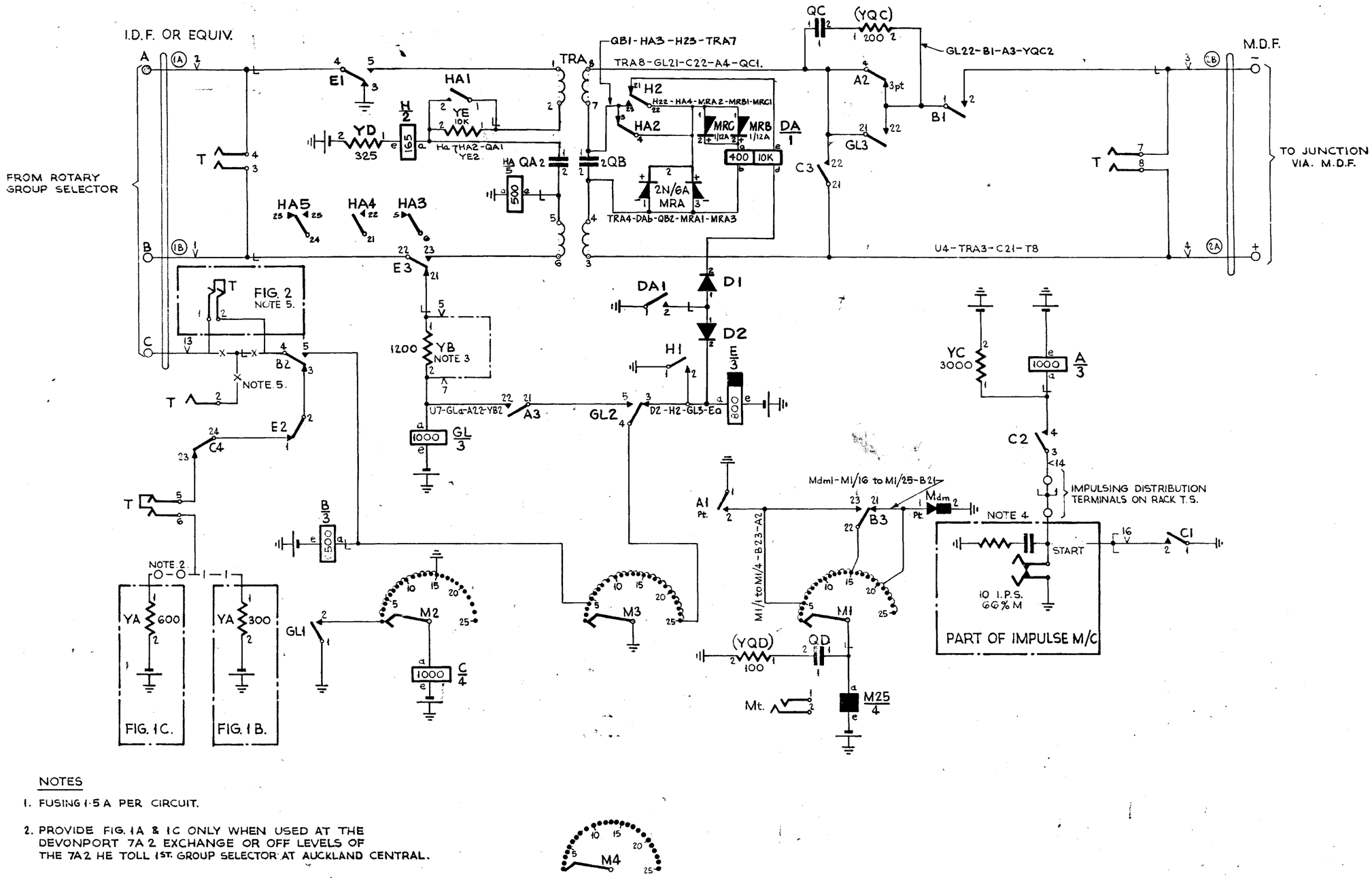


NOTES

1. FUSING 1·5 A PER CIRCUIT.
2. PROVIDE FIG. 1A & 1C ONLY WHEN USED AT THE DEVONPORT 7A 2 EXCHANGE OR OFF LEVELS OF THE 7A2 HE TOLL 1ST. GROUP SELECTOR AT AUCKLAND CENTRAL.
3. WHEN ROTARY EXCHANGE IS EQUIPPED WITH OTHER THAN 7A2 TYPE REGISTERS STRAP OUT THIS RESISTANCE.
4. ONE INTERRUPTER SPRINGSET OR CAM COMMON TO NOT MORE THAN 10 'A' RELAYS.
5. WHEN BUSYING FACILITY IS REQUIRED DELETE WIRING —X— & ADD FIG. 2.

BATT. WH U12-GLe-Ee-Ce-Me-Be-Ae-YA2-YC2-YD2.

EARTH R U11 -H1-GL1-E3-C1-M2/15 to M2/2-M3/W-Mdm2-A1-YQD2.
DA1-HA.a.

SLOW RELEASE | SLOW OPERATE

| AMENDMENT PARTICULARS | ISSUE | DATE | APP. |
|---|---|---|---|
| Ha-QA1 WIRED. NZMSK, AMD. RES. DESIG (176060) | B | 13·7·76 | RED |
| (133405) | A | 31·5·77 | RED |

MANUAL HOLD RELAY SET TYPE RSM, ROTARY TO STEP BY STEP

50 V. | W

GBW. 11810 MOD A

N.Z.P.O. | DRN. J.M.A. | CHKD | WIRING | CIRCUIT L.M.