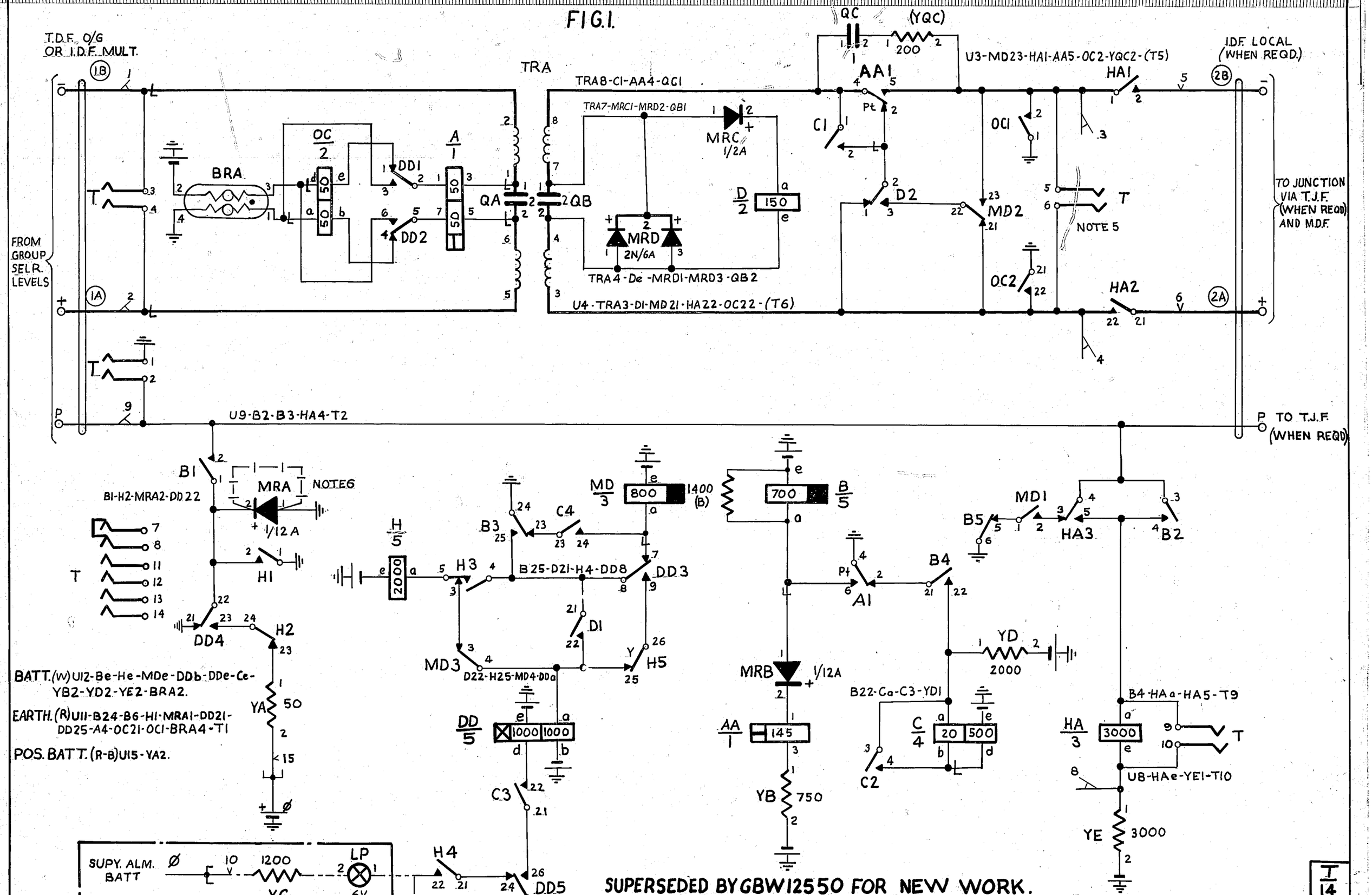

NOTE:—

1. FUSING 1·5A PER CIRCUIT.
2. WHEN 6V LAMPS ARE FITTED USE FIG1 & FIG.2. WHEN 50V. LAMPS ARE FITTED USE FIG.1. & FIG.3.
3. Ø FOR WIRING SEE GBW 10640 OR EQUIVALENT.
4. SHELF JACK POINTS 9 & 11 TO MAKE CONTACT WHEN RELAY SET IS REMOVED.
5. ON SOME EARLY EQPTS. TEST JACK SPRINGS WERE NOT FITTED ACROSS O/G LEADS AN EIGHT POINT TEST JACK ONLY WAS FITTED WITH T5 & T6 CONNECTED TO 'HA' RELAY.
6. WHEN. LOCAL METERING IS NOT REQUIRED ADD STRAP SHOWN —|—|—