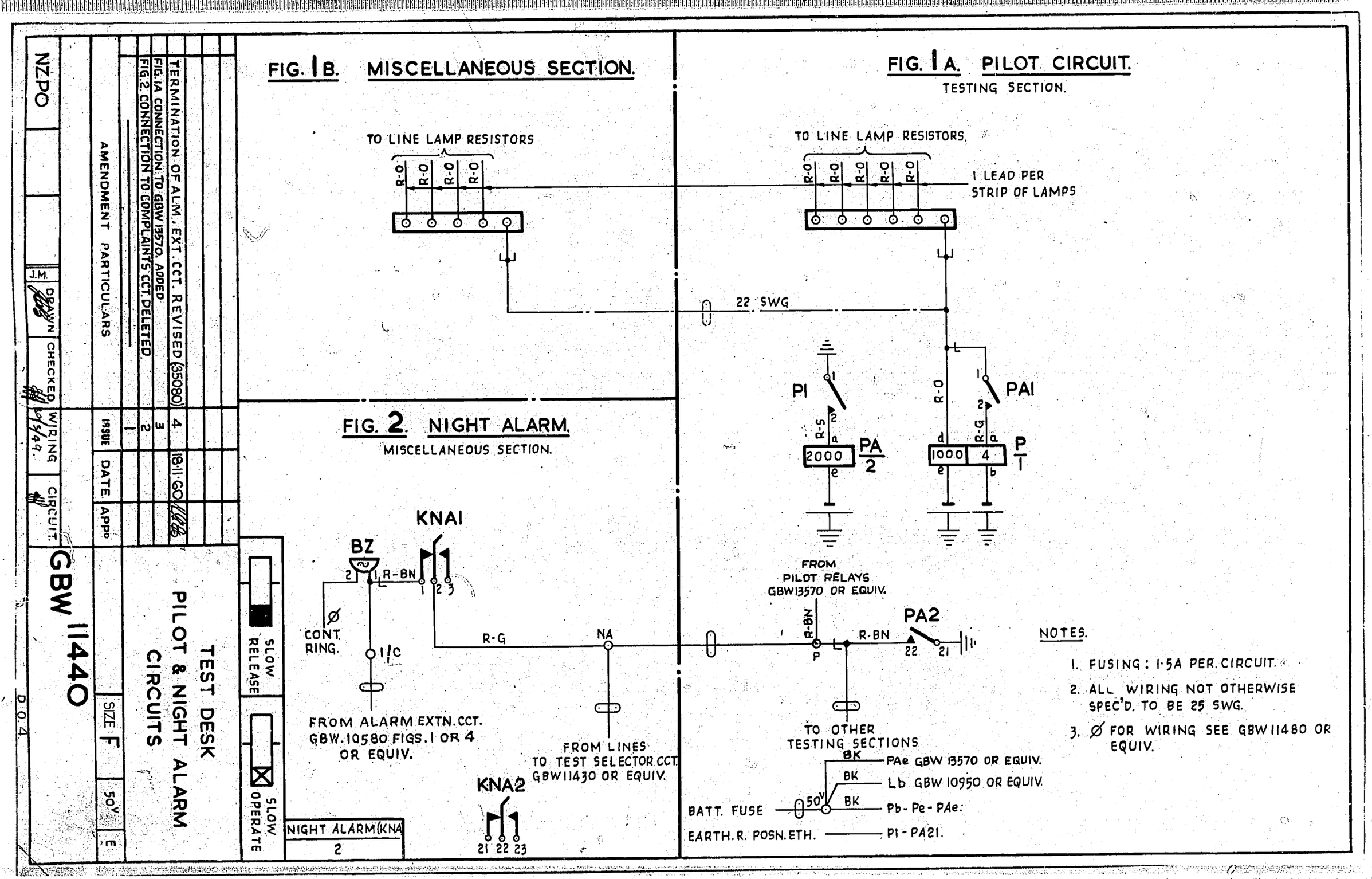
FIG. 1B. MISCELLANEOUS SECTION.
TO LINE LAMP RESISTORS
R-O
FIG. 1A. PILOT CIRCUIT.
TESTING SECTION.
TO LINE LAMP RESISTORS.
1 LEAD PER STRIP OF LAMPS
22 SWG
P1
PA1
R-S
R-G
2000
1000
4
PA 2
P 1
FIG. 2. NIGHT ALARM.
MISCELLANEOUS SECTION.
KNA1
BZ
R-BN
CONT. RING.
1/C
R-G
NA
FROM ALARM EXTN. CCT. GBW.10580 FIGS. 1 OR 4 OR EQUIV.
FROM LINES TO TEST SELECTOR CCT. GBW11430 OR EQUIV.
KNA2
21 22 23
FROM PILOT RELAYS GBW13570 OR EQUIV.
PA2
22
21
TO OTHER TESTING SECTIONS
BK
PAe GBW 13570 OR EQUIV.
Lb GBW 10950 OR EQUIV.
Pb - Pe - PAe.
BATT. FUSE
50V
EARTH. R. POSN. ETH.
P1 - PA21.
NOTES.
1. FUSING: 1·5A PER CIRCUIT.
2. ALL WIRING NOT OTHERWISE SPEC'D. TO BE 25 SWG.
3. Ø FOR WIRING SEE GBW11480 OR EQUIV.
SLOW RELEASE
SLOW OPERATE
NIGHT ALARM (KNA)
2
NZPO
AMENDMENT PARTICULARS
ISSUE
DATE
APPD
TERMINATION OF ALM. EXT. CCT. REVISED (35080)
FIG. 1A CONNECTION TO GBW 13570. ADDED
FIG. 2. CONNECTION TO COMPLAINTS CCT. DELETED.
J.M.
DRAWN
CHECKED
WIRING
CIRCUIT
GBW 11440
TEST DESK
PILOT & NIGHT ALARM CIRCUITS
SIZE F
50V
E
D.04