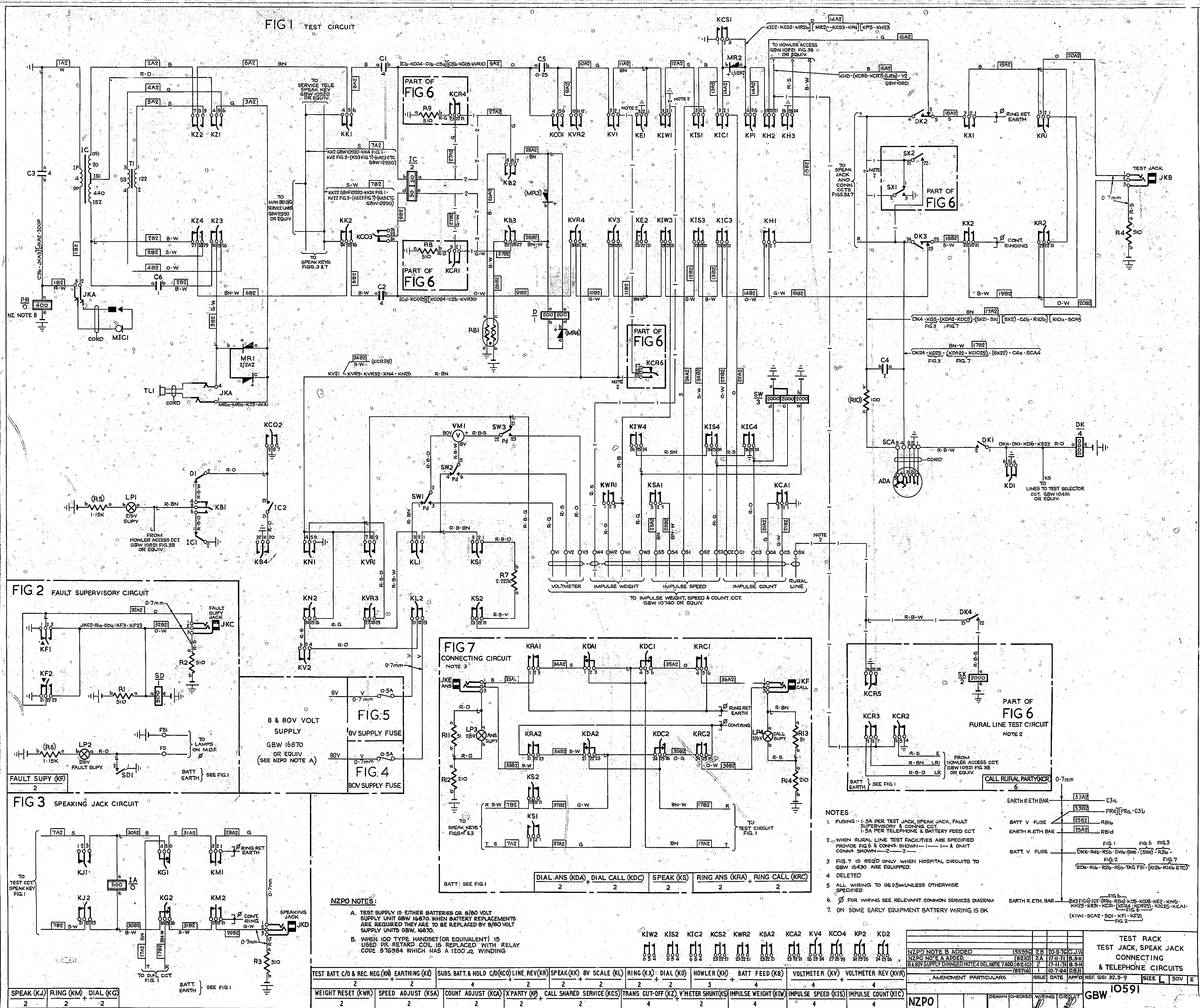

NZPO NOTES:

A. TEST SUPPLY IS EITHER BATTERIES OR 8/80 VOLT SUPPLY UNIT GBW 16870. WHEN BATTERY REPLACEMENTS ARE REQUIRED THEY ARE TO BE REPLACED BY 8/80 VOLT SUPPLY UNITS GBW. 16870.

B. WHEN 100 TYPE HANDSET (OR EQUIVALENT) IS USED PR RETARD COIL IS REPLACED WITH RELAY CODE B76984 WHICH HAS A 1200 Ω WINDING

NOTES

1. FUSING:- 1·5A PER TEST JACK, SPEAK JACK, FAULT SUPERVISORY & CONNG. CCT. 1·5A PER TELEPHONE & BATTERY FEED CCT.
2. WHEN RURAL LINE TEST FACILITIES ARE SPECIFIED PROVIDE FIG. 6 & CONNS. SHOWN —1—1— & OMIT CONNS. SHOWN —2—2—
3. FIG. 7 IS REQ'D ONLY WHEN HOSPITAL CIRCUITS TO GBW 16430 ARE EQUIPPED.
4. DELETED
5. ALL WIRING TO BE 0·5mm UNLESS OTHERWISE SPECIFIED.
6. Ø FOR WIRING SEE RELEVANT COMMON SERVICES DIAGRAM
7. ON SOME EARLY EQUIPMENT BATTERY WIRING IS BK

TEST BATT. C/O & REC. NEG. (KN) + EARTHING (KE)	SUBS. BATT. & HOLD C/O (KCO) + LINE REV (KR)	SPEAK (KK) + 8V SCALE (KL)	RING (KX) + DIAL (KD)	HOWLER (KH) + BATT FEED (KB)	VOLTMETER (KV) + VOLTMETER REV (KVR)
2 + 2	4 + 2	2 + 2	2 + 2	3 + 4	4 + 4

WEIGHT RESET (KWR)	SPEED ADJUST (KSA)	COUNT ADJUST (KCA)	'X' PARTY (KP) + CALL SHARED SERVICE (KCS)	TRANS CUT-OFF (KZ) + V'METER SHUNT (KS)	IMPULSE WEIGHT (KIW)	IMPULSE SPEED (KIS)	IMPULSE COUNT (KIC)
2	2	2	2 + 2	4 + 2	4	4	4

AMENDMENT PARTICULARS		ISSUE	DATE	APP'D
NZPO NOTE B ADDED	(55996)	2B	20·8·76	C.J.W
NZPO NOTE A ADDED.	(8210)	2A	17·11·71	B.S.H
8 & 80V SUPPLY CHANGED. NOTE 4 DEL. NOTE 7 ADD.	(8210)	2	17·11·71	B.S.H
	(82716)	1	10·7·64	D.B.H

TEST RACK
TEST JACK, SPEAK JACK CONNECTING & TELEPHONE CIRCUITS

REF. GSI 32.5-9 SIZE L 50V E

NZPO | DRAWN | CHECKED | WIRING | CIRCUIT

GBW 10591