FORM E 355

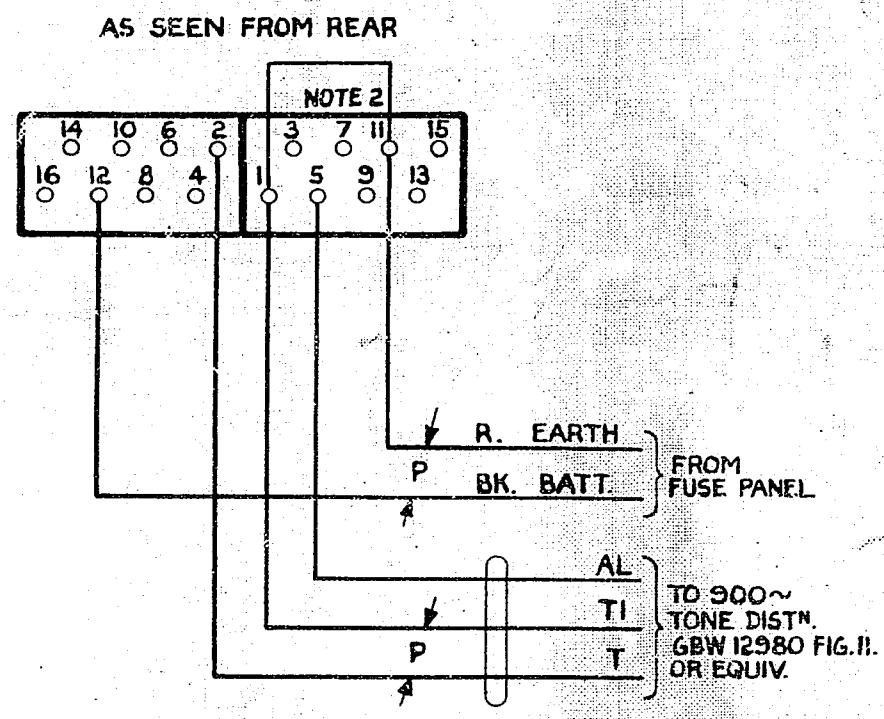

NOTES:-

1. ALL WIRING TO BE 20 SWG UNLESS OTHERWISE SPECIFIED.
2. SHELF JACK POINTS U9 & U11 TO MAKE CONTACT WHEN REL. SET IS REMOVED.

(31559)	1.	5·5·54	CLM	900 C.P.S. OSCILLATOR WITH ALARM RELAYS
AMENDMENT PARTICULARS	ISSUE	DATE	APPD	REF:— 50V. H
N.Z.P.O.	DRAWN B.E.Y.	CHECKED E/D 12/5	WIRING E/D.	CIRCUIT

GBU 13480