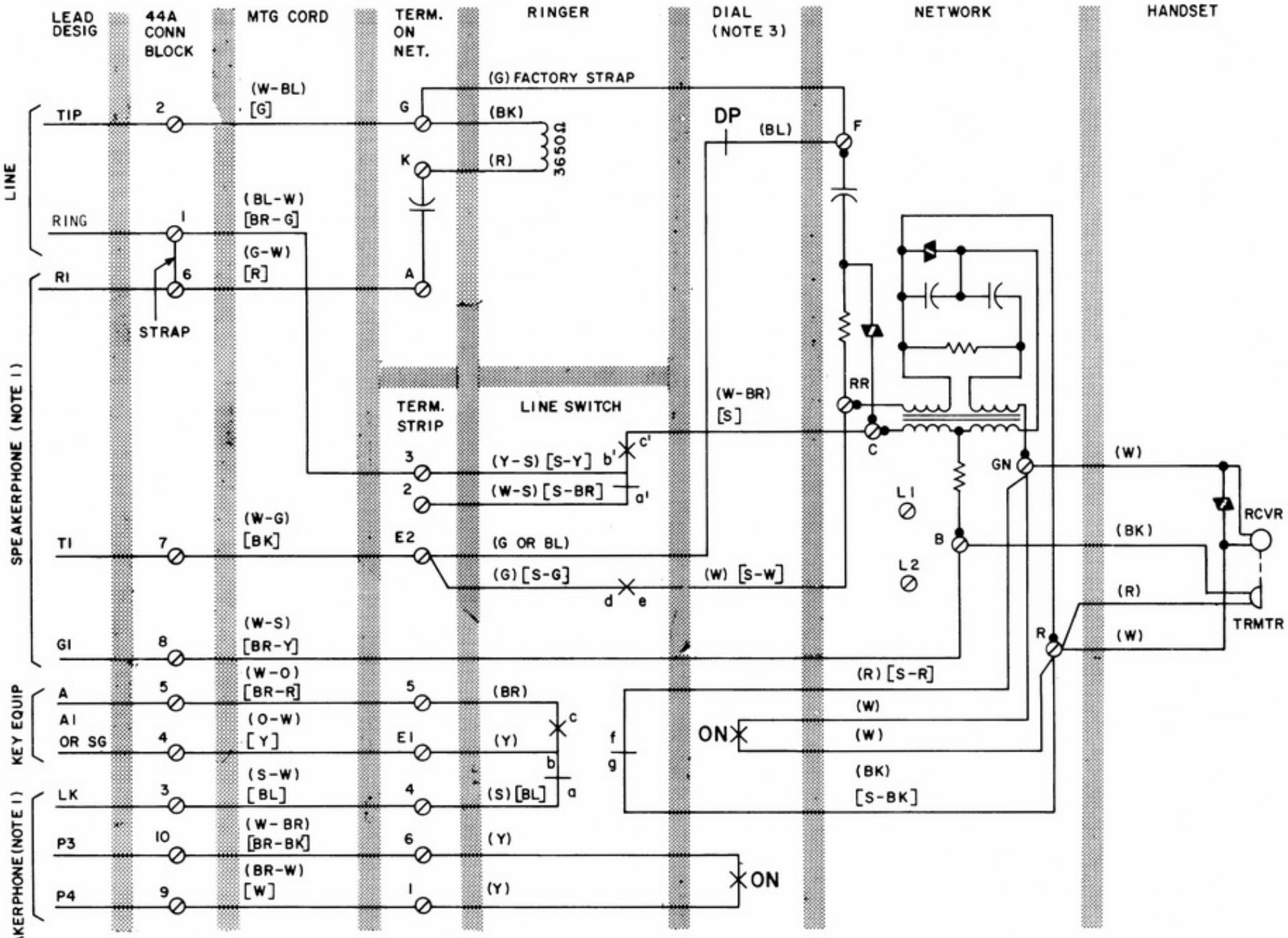

NOTES:

1. FOR CONNECTIONS TO SPEAKERPHONE SYSTEM REFER TO APPROPRIATE SECTION IN DIVISION 512.
2. SET FACTORY WIRED FOR INDIVIDUAL SERVICE
3. FOR MANUAL SERVICE, REPLACE DIAL WITH APPARATUS BLANK.
4. CONNECTIONS FOR C4B RINGER SHOWN.

DP DIAL PULSE
ON OFF-NORMAL
( ) CURRENT COLOR CODE
[ ] MD COLOR CODE

500R/S (MD) Telephone Set, Connections