STROMBERG-CARLSON CORPORATION

S-C2220B-AD2 & S-C2220B-AC2 TELEPHONE

CONNECTING DIAGRAM

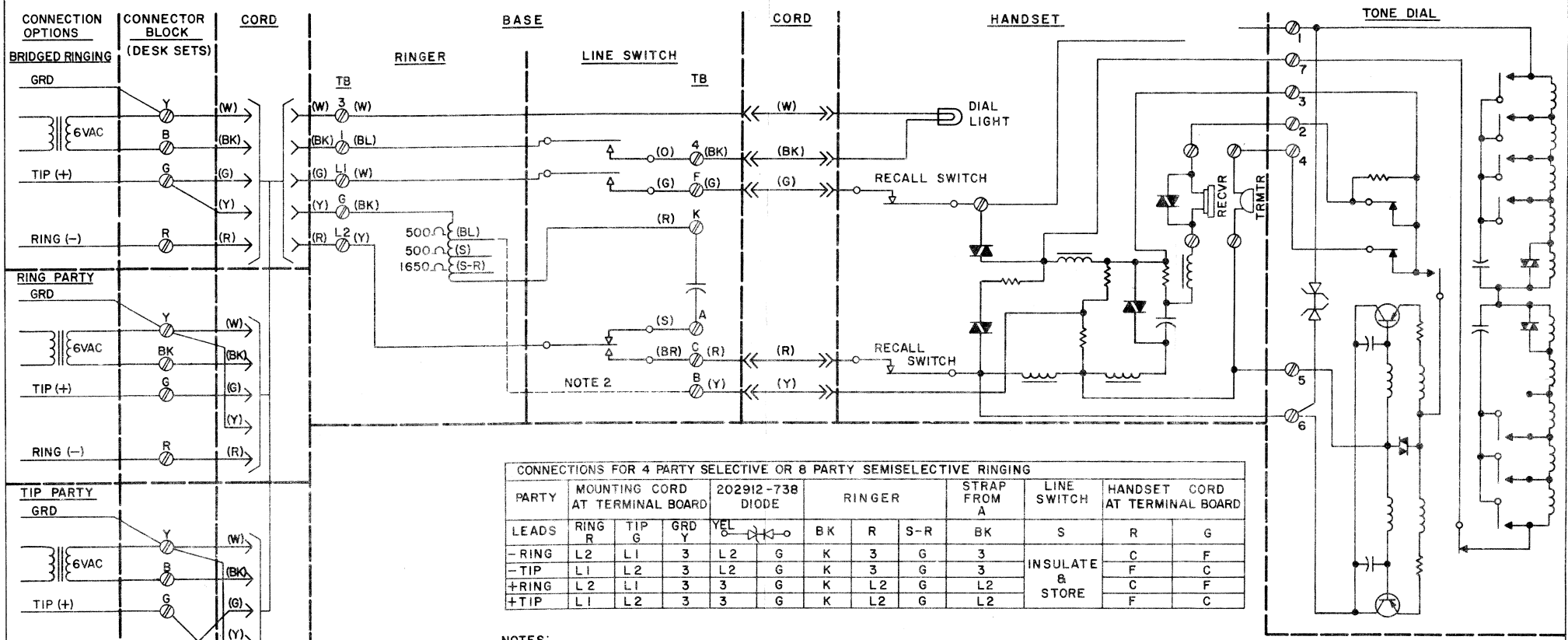

CONNECTIONS FOR 4 PARTY SELECTIVE OR 8 PARTY SEMISELECTIVE RINGING												
PARTY	MOUNTING CORD AT TERMINAL BOARD			202912-738 DIODE		RINGER			STRAP FROM A	LINE SWITCH	HANDSET CORD AT TERMINAL BOARD	
LEADS	RING R	TIP G	GRD Y	YEL		BK	R	S-R	BK	S	R	G
−RING	L2	L1	3	L2	G	K	3	G	3	INSULATE & STORE	C	F
−TIP	L1	L2	3	L2	G	K	3	G	3		F	C
+RING	L2	L1	3	3	G	K	L2	G	L2		C	F
+TIP	L1	L2	3	3	G	K	L2	G	L2		F	C

NOTES:
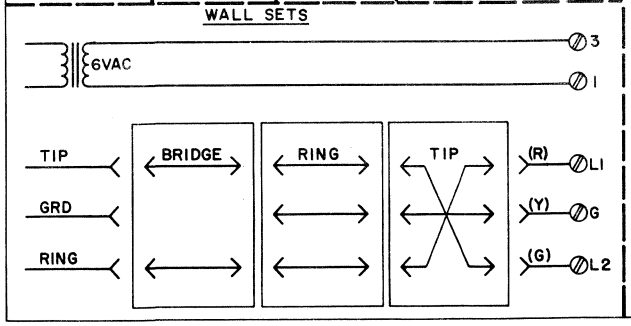
1. GROUND MAY BE OMMITTED IF NOT REQUIRED FOR SERVICE. NOT REQUIRED TO PROTECT TRANSFORMER.
2. FOR TIP PARTY IDENTIFICATION, 1000Ω OR 2650Ω, CONNECT (BL) RINGER LEAD TO B.
3. TO PERMANENTLY SILENCE RINGER, REMOVE RINGER LEAD FROM K, INSULATE AND STORE.
4. MOUNT CAPACITOR SUPPLIED WITH RINGER BETWEEN A AND K TERMINALS. BE SURE THE CAPACITOR DOES NOT INTERFERE WITH RINGER GONG.
5. FOR WALL TELEPHONES, CONNECT RINGER (BK) LEAD TO L1 FOR BRIDGED RINGING AND TO G FOR GROUNDED RINGING, BRING STATION WIRING DIRECTLY TO TERMINAL BOARD AS SHOWN.
6. FOR DIAL LAMP, USE TRANSFORMER 897537-000.
7. FOR MESSAGE WAITING LAMP, ORDER PACKAGE ASSEMBLY 703051-806/826 (SPECIFY COLOR).
8. FOR TIP PARTY, REVERSE HANDSET (R) AND (G) ON C AND F OF BASE TERMINAL BOARD.