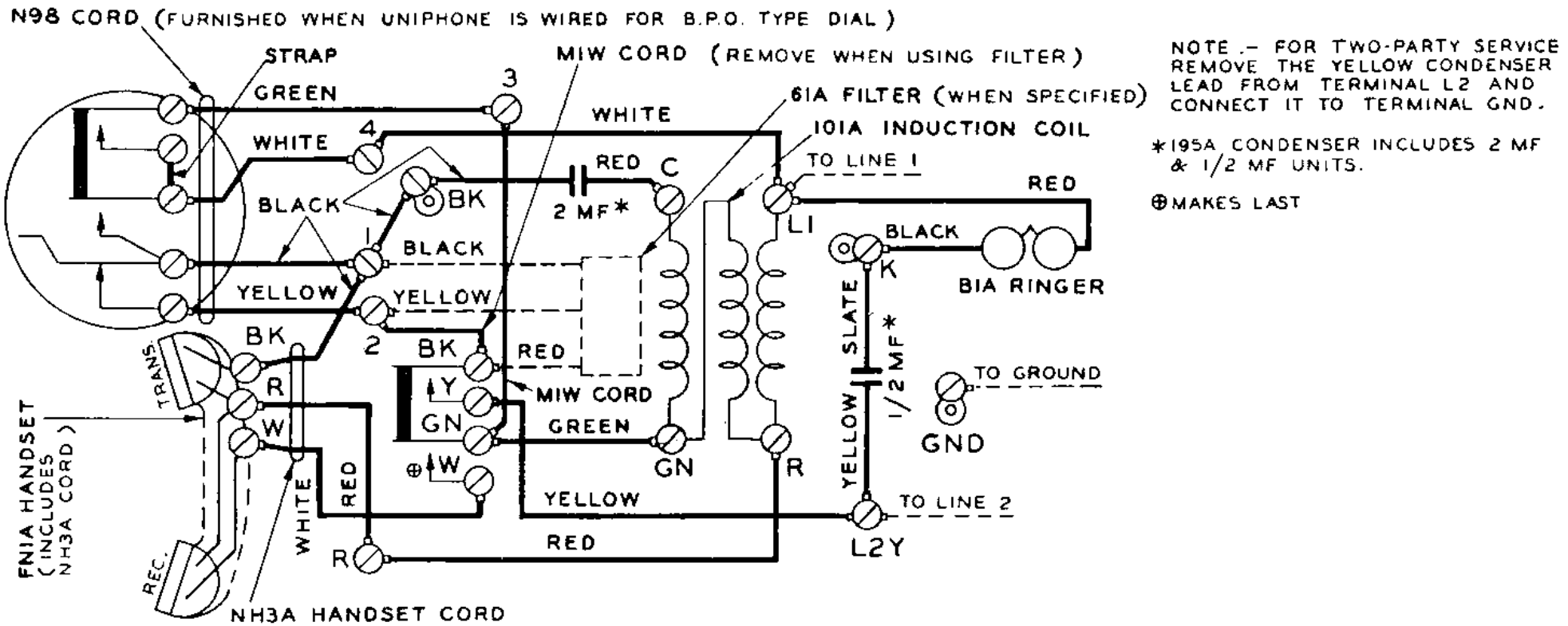

Wiring Diagram for No. 2 Type Uniphone Equipped with a British Post Office Type Dial