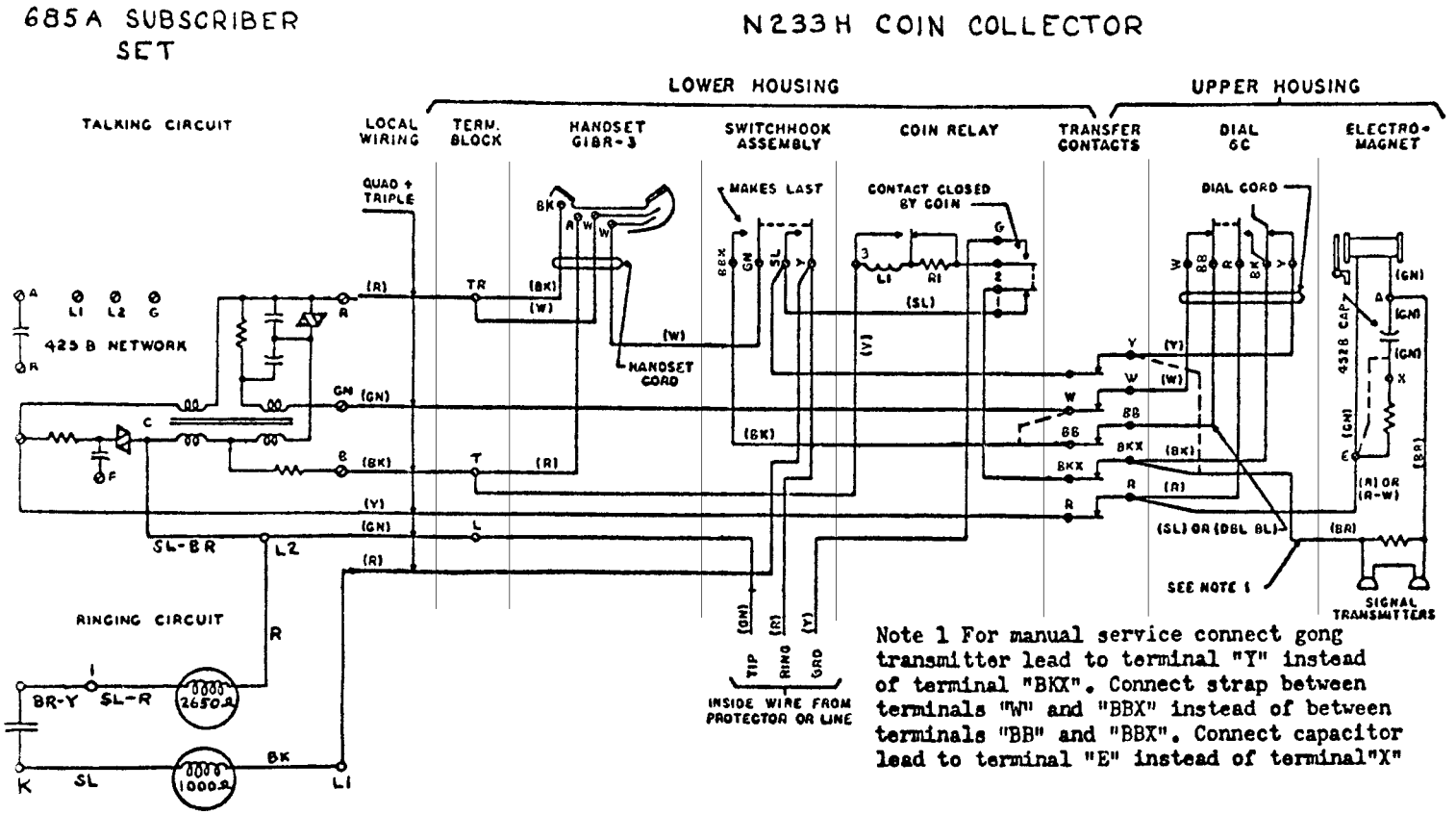

Note 1 For manual service connect gong transmitter lead to terminal "Y" instead of terminal "BKX". Connect strap between terminals "W" and "BBX" instead of between terminals "BB" and "BBX". Connect capacitor lead to terminal "E" instead of terminal "X"