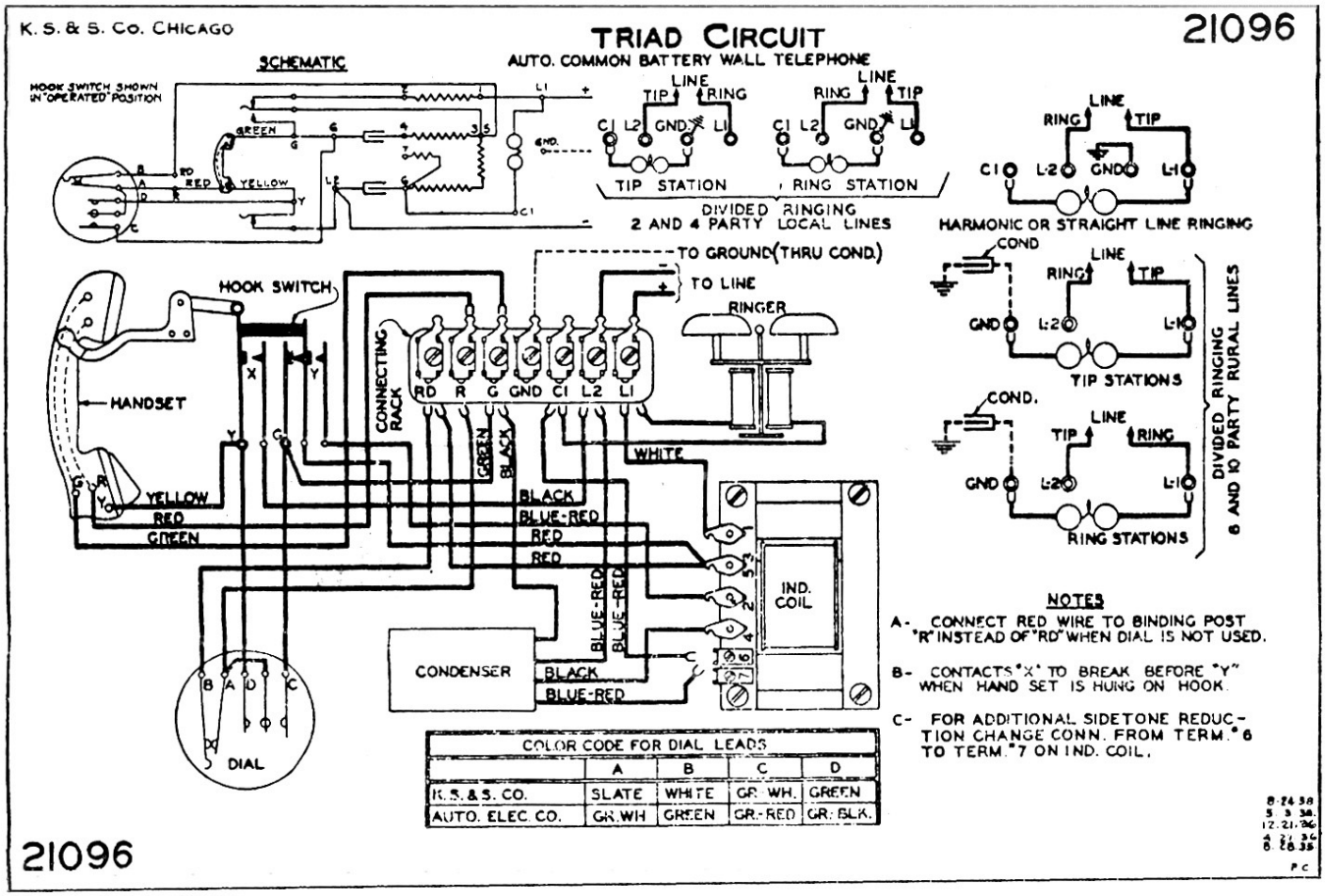

9917 WALL SET, TRIAD, MOULDED CASE SEE 21097 FOR MANUAL VERSION COURTESY LARRY KOLB