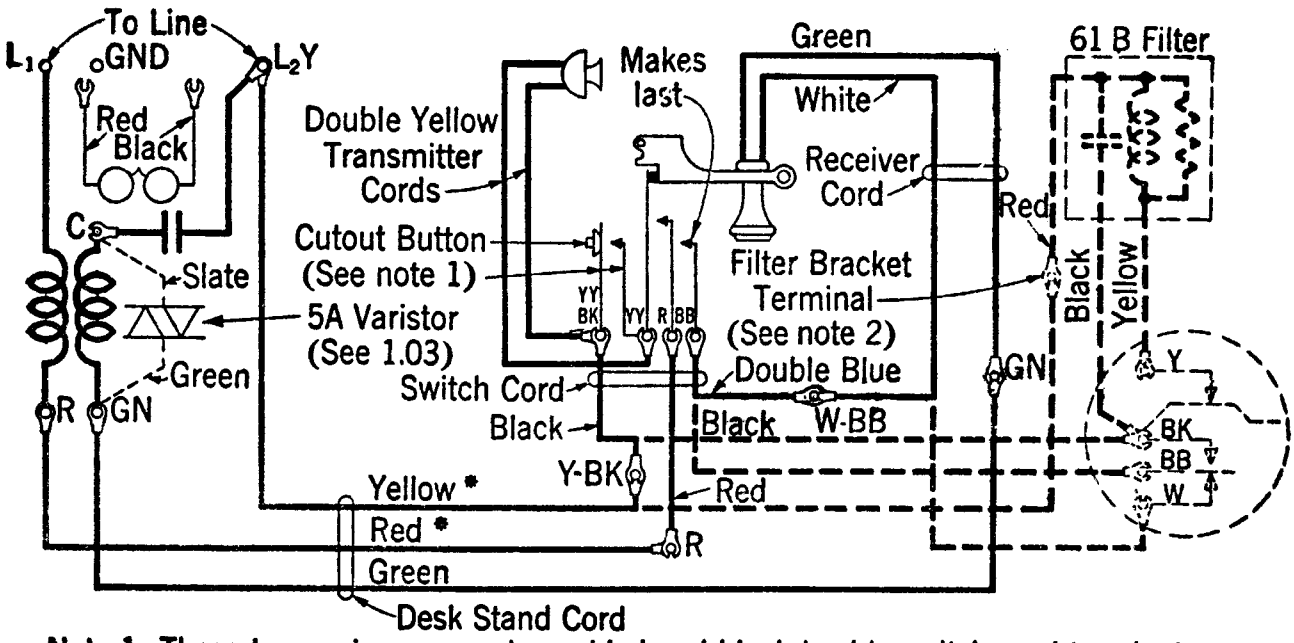

Note 1: These two springs are not provided and black lead in switch cord terminates directly on transmitter in the 51 AL or 52 AB desk stands.

Note 2: If filter is not provided connect yellow lead from L_2Y to Y of dial instead of to filter bracket terminal.

* For sidetone reduction connect yellow to R and red to L_2Y.

51CM, 51AL or 52AB Sidetone Desk Stands (Manual or Dial).