PRACTICE 512-6261-200
P0594715
Issued: 83 02 04
Standard

"CONFERENCE 2000" TELECONFERENCE TERMINAL

QTAF-TYPES

DESCRIPTION, INSTALLATION, OPERATION, MAINTENANCE, AND CONNECTIONS

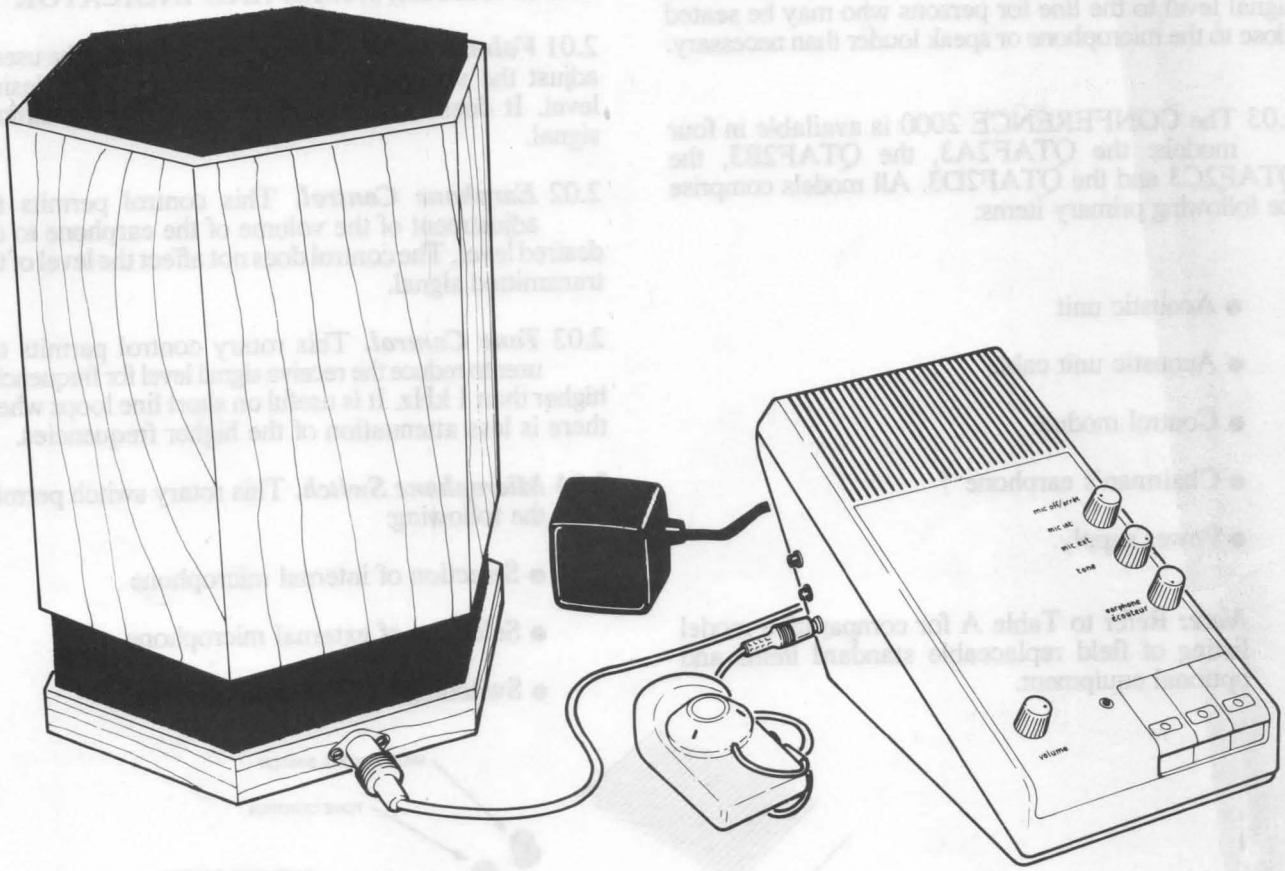

Fig. 1 — CONFERENCE 2000

CONTENTS PAGE

1. GENERAL 2
2. CONTROLS, JACKS AND INDICATOR ... 2
3. INSTALLATION 4
4. OPERATION 5
5. MAINTENANCE 5
6. CONNECTIONS 6

Reason for Reissue: This practice is reissued to update descriptions of previously available models and to incorporate information on the QTAF2D3 type for U.S. application.

©Northern Telecom Limited, 1979
Printed in Canada

1. GENERAL

1.01 The CONFERENCE 2000 teleconference terminal permits voice-switched handsfree conversation between two or more geographically separated groups. CONFERENCE 2000 is powered by a separate transformer, and it can be operated at any location where a telephone jack and an ac outlet are readily available.

1.02 The CONFERENCE 2000 differs from a COMPANION* or LOGIC* handsfree unit in that the omnidirectional microphone and loudspeaker are located in the acoustic unit. An automatic gain control and amplifier circuit is incorporated to limit the signal level to the line for persons who may be seated close to the microphone or speak louder than necessary.

1.03 The CONFERENCE 2000 is available in four models: the QTAF2A3, the QTAF2B3, the QTAF2C3 and the QTAF2D3. All models comprise the following primary items:

- Acoustic unit
- Acoustic unit cable
- Control module
- Chairman's earphone †
- Power supply.

Note: Refer to Table A for comparative model listing of field replaceable standard items and optional equipment.

1.04 The QTAF2A3 and QTAF2B3 models replace the QTAF2A1. The QTAF2C3 model CONFERENCE 2000 replaces the QTAF2D1, and includes the optional NE-D16QD control module mounting cord as standard equipment. The NE-D16QD cord is used to connect the control module to other than LOGIC-type telephone sets; this optional cord is also available for use on the QTAF2A3 and QTAF2B3 and QTAF2D3. The QTAF2D3 model is U.L. listed and for the U.S. Market.

1.05 If required, customer-provided external microphones and mixer may be used with the CONFERENCE 2000.

2. CONTROLS, JACKS AND INDICATOR

2.01 ***Volume Control.*** This control permits the user to adjust the volume of the loudspeaker to the desired level. It does not affect the level of the transmitted signal.

2.02 ***Earphone Control.*** This control permits the adjustment of the volume of the earphone to the desired level. The control does not affect the level of the transmitted signal.

2.03 ***Tone Control.*** This rotary control permits the user to reduce the receive signal level for frequencies higher than 1 kHz. It is useful on short line loops where there is less attenuation of the higher frequencies.

2.04 ***Microphone Switch.*** This rotary switch permits the following:

- Selection of internal microphone
- Selection of external microphone
- Switching off of all microphones.

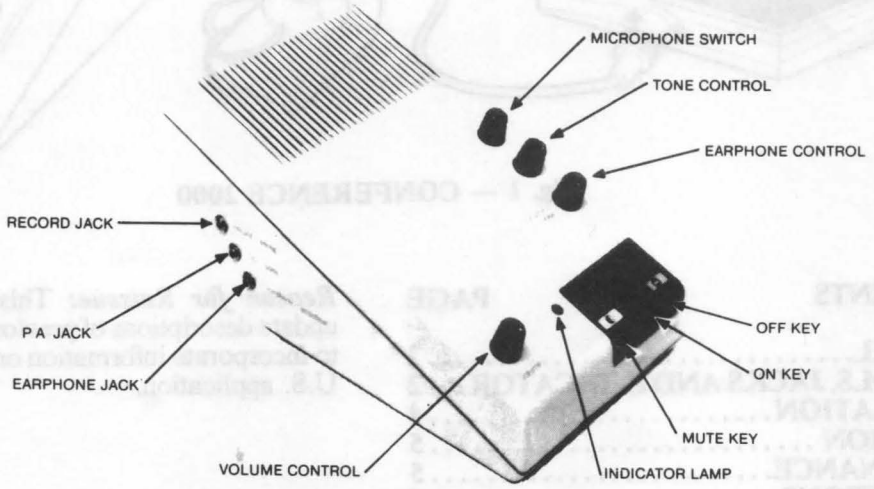

Fig. 2 — Control Module

† Not included with QTAF2A3 model.

* COMPANION and LOGIC are trademarks of Northern Telecom Limited

2.05 ***Indicator Lamp.*** The red Light-Emitting Diode (LED) indicates the operating mode of the teleconference terminal. This diode is lit when the terminal is in transmit mode and extinguished when the terminal is in receive mode.

2.06 ***Earphone Jack.*** This feature permits the optional use of the earphone. The user of the earphone may monitor the line inputs which originate from all points on the teleconference.

2.07 ***Record Jack.*** This feature permits the connection of a tape recorder to record all conversation.

2.08 ***PA Jack.*** This feature permits the connection of a public address system which will allow a larger group to monitor the conversation.

2.09 ***On Key.*** This piano-type key must be depressed momentarily to answer an incoming call when the handset is on-hook, or before commencing on-hook dialing. The key must be held depressed during transfer from handset to handsfree operation. The key may be held depressed to hold a call on the terminal with both transmission and reception inhibited. The key is designated by a green identification symbol on the key face.

2.10 ***Off Key.*** This piano-type key must be momentarily depressed to terminate a call on the terminal. The key is designated by a red identification symbol on the key face.

2.11 ***Mute Key.*** This piano-type key may be depressed during a call to inhibit transmission without affecting reception. The key is designated by an amber identification symbol on the key face.

TABLE A
FIELD REPLACEABLE ITEMS AND OPTIONAL EQUIPMENT

PART NO.	DESCRIPTION	QTAF2A3 ⊡	QTAF2B3 ⊡	QTAF2C3	QTAF2D3 ⊡
P0582728	Acoustic Unit Assembly (American Walnut)	X	X	X	X
P0582784	Acoustic Unit Cable Assembly (Long), 10 ft. (3.1m)	X	X	X	X
P0621435	Control Module Assembly (Flame Retardant Plastic), e/w 15-pin Connector	X	X	X	X
A0285450	NE-D16QD Mounting Cord (Control Module), 16-conductor			X	
P0582735	Chairman's Earphone Assembly		X	X	X
A0312887	Transformer QTK312A8				X
A0293449	Power Supply Assembly QTK312A7	X	X	X	
P0583443	English Operations Guide	X	X	X	X
P0588549	French Operations Guide		X	X	
R0103648	Inner Carton	X	X	X	X
R0103650	Outer Carton	X	X	X	X
R0103649	Plastic Handle (for Outer Carton)	X	X	X	X
P0616028	FCC Registration Label	X			X
Optional Equipment					
A0285450	NE-D16QD Mounting Cord (Control Module), 16-conductor	X	X		X
P0582733	Acoustic Unit Extension Cable, 10 ft. (3.1m)	X	X	X	X

⊡ Not required by Bell Canada

3. INSTALLATION

Location

3.01 For best acoustic performance, the CONFERENCE 2000 should be installed in a room which does not exceed 25 ft. (7.6m) in length or width, with a maximum height of 9 ft. (2.7m). The walls, floor and ceiling should also be acoustically treated to minimize echo effect (i.e., carpet on floor, a hard surface ceiling, drapery covering windows, etc.).

3.02 The acoustic unit should be positioned a minimum of 3 ft. (0.9m) from any wall and should be centrally located on the conference table approximately equidistant from all participants.

3.03 No participant should be more than 10 ft. (3.1m) from the acoustic unit. The surface of the table directs the voice input; positioning the acoustic unit on a pedestal adversely affects the performance of the product.

Power Supply

3.04 Input power to the CONFERENCE 2000 is provided through a power supply comprising a transformer and a 12 ft. (3.7 m) long, two-conductor cord terminated by a power plug. The tranformer steps the voltage down from 115 Vac to 16 Vac and is capable of delivering a current of 375mA. The power plug connects into the power jack on the rear of the control module.

Connection to LOGIC Telephone Sets

3.05 To connect the CONFERENCE 2000 to LOGIC-type telephone sets proceed as follows:

(1) Hold the telephone set in the right hand with the dial forward.

(2) Hold the control module in the left hand with the face forward.

(3) Tilt the upper edge of the control module towards the upper edge of the telephone set and bring the set and module togther so that the plug is firmly in the socket.

Connection to SL-1 Electronic Telephone Sets (LOGIC-style)

3.06 The CONFERENCE 2000 can be connected to a LOGIC-style SL-1 set by following the procedure outlined in 3.05. For proper operation however, it is necessary to make minor wiring modifications to the SL-1 set and add either a QKK1E Handsfree Interface Kit (A0283601) or a QKK3B Automatic Handsfree Interface Kit (A0283608). When a QKK-type kit is used, external power to the control module is not required; refer to Chart 3-5 of Practice 553-2001-211 for complete details (Wiring of the CONFERENCE 2000 is similar to the QUS1C LOGIC handsfree unit.)

3.07 For connection to other than LOGIC-type telephone sets, including NE-500- and NE-2500-type SL-1 sets, the NE-D16QD mounting cord must be used. Refer to Tables B and C.

Connection to SM-1 Telephone Sets (LOGIC-style)

3.08 The CONFERENCE 2000 can be connected to a LOGIC-style SM-1 set by following the procedure outlined in 3.05. For proper operation however, it is necessary to make minor wiring modifications to the SM-1 set and add a QKK2C Interface Kit (A0272575). For complete connection instructions refer to Practice 502-8771-200 for the SM-1 telephone set or Practice 518-8011-210 for the SM-1 system. (Wiring of the CONFERENCE 2000 is similar to the QUS1C LOGIC handsfree unit.)

External Microphones

3.09 When the background noise level is so high that the called party may have difficulty hearing, external microphones located in closer proximity to the participant may improve the transmission quality. When more than one external microphone (customer-provided) is essential, a standard microphone mixer (customer-provided) is required.

Notes: Customer-provided microphones should meet the following specifications:

- Dynamic
- 10,000 ohm impedance
- 1/4 in. (6.4mm) plug.

Although 600-ohm, electret-type lapel microphones perform well, the battery requirement (3- to 6-hour operational use) may lead to frequent battery replacement.

3.10 The microphone mixer should be centrally located, adjacent to the acoustic unit. This ensures that the external microphones are positioned approximately equidistant from the acoustic unit.

Note: Commercially available active mixers (equipped with self-contained amplification circuits) can be connected to the CONFERENCE 2000 mixer jack located at the back of the control unit. When external microphones are in use, the microphone switch on the front of the control unit must be set to the **mic ext** position.

3.11 When the microphone mixer cable is not long enough to provide a central location for the acoustic unit, an add-on extension cord will be required.

3.12 On completion of the CONFERENCE 2000 installation, the operation tests described in Chart 1 must be performed.

4. OPERATION

4.01 For best operation, the following distance and speech guidelines should be observed:

- Conference participants should be seated not closer than 3 ft. (0.9m) or further than 10 ft. (3.1m) from the acoustic unit.
- Speech should be at normal conversation level. Lower levels of speech do not operate the voice switching circuit and, consequently, are not transmitted. The level of speech must be raised as the distance from the acoustic unit is increased.

Note: The voice-switching circuit permits transmission of speech in one direction at a time. The circuit switches to transmit when you speak and to receive when the distant party responds.

4.02 The acoustic unit represents the called party. Speech should be directed toward the acoustic unit at all times. Speech directed away from the unit sounds hollow at the called party location.

5. MAINTENANCE

5.01 If the CONFERENCE 2000 must be returned for repair, it should be packaged using the cartons listed in Table A to protect against damage during shipping.

5.02 The CONFERENCE 2000 should be treated as a piece of fine furniture (especially the acoustic unit), and should not be subjected to temperature extremes during use, storage or shipment.

6.0 CONNECTIONS

6.01 The CONFERENCE 2000 is available as follows:

- Equipped with a 15-pin connector which is compatible with LOGIC-style telephone sets.
- An optional NE-D16QD mounting cord (standard on QTAF2C3)is available for connection to single-line or multiline telephone sets. The NE-D16QD cord converts the modular connection to spade-tip connectors.

6.02 Refer to Tables B and C for CONFERENCE 2000 connection information.

TABLE B
CONNECTION INFORMATION (FIGURES)

FIGURE	DESCRIPTION
3	Connections for block diagram of CONFERENCE 2000
4	Connections for block diagram of CONFERENCE 2000 with optional microphone mixer and customer-provided microphones
5	Connections for block diagram of control module equipped with NE-D16QD cord
6	Connections for block diagram of control module equipped with a 15-pin connector
7	Connections for single-line telephone set rotary dial
8	Connections for single-line telephone set DIGITONE* dial
9	Connections for single-line telephone set Phase 1 DIGIPULSE* dial
10	Connections for W.E. Co. single-line telephone set DIGITONE dial, or equivalent
11	Connections for single-line telephone set Phase II DIGIPULSE dial, less polarity guard
12	Connections for multiline key telephone set DIGITONE dial
13	Connections for multiline key telephone set Phase II DIGIPULSE dial, less polarity guard
14	Connections for W.E. Co. multiline key telephone set with pushbutton dial equipped for on-hook dialing
15	Connections for multiline key telephone set with rotary dial
16	Connections for auxiliary transfer contacts
17	Connections for external station busy lamp or relay control

* DIGITONE and DIGIPULSE are trademarks of Northern Telecom Limited

TABLE C
CONNECTION INFORMATION (TABLES)

TABLE	DESCRIPTION
D	Connections for NE-500-type telephone sets
E	Connections for NE-2500-type telephone sets
F	Connections for CONTEMPRA* telephone sets
G	Connections for NE-564-type telephone sets
H	Connections for NE-2564-type telephone sets
I	Connections for NE-630- and NE-2630-type telephone sets
J	Connections for Stromberg-Carlson single-line telephone sets
K	Connections for Stromberg-Carlson multiline telephone sets
L	Connections for ITT Kellogg single-line telephone sets
M	Connections for ITT Kellogg multiline pushbutton dial telephone sets
N	Connections for ITT Kellogg multiline rotary dial telephone sets
O	Connections for ITT Kellogg multiline pushbutton dial telephone sets, e/w NE-35Q3B DIGITONE dial
P	Connections for Automatic Electric single-line telephone sets
Q	Connections for Automatic Electric multiline rotary dial telephone sets
R	Connections for Automatic Electric multiline pushbutton dial telephone sets
S	Connections for Automatic Electric 860-type multiline telephone sets

*CONTEMPRA is a trademark of Northern Telecom Limited

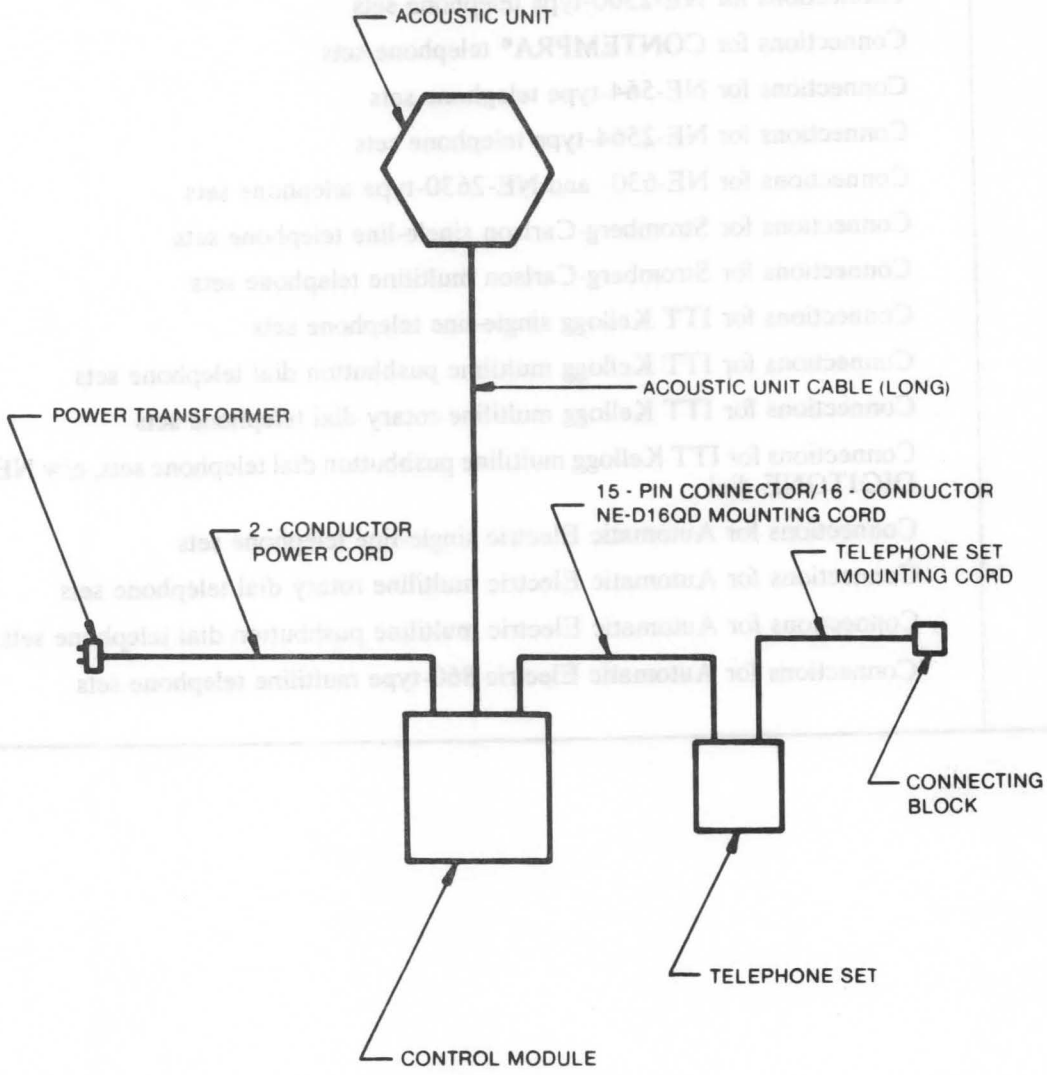

Fig. 3 — Connections for block diagram of CONFERENCE 2000

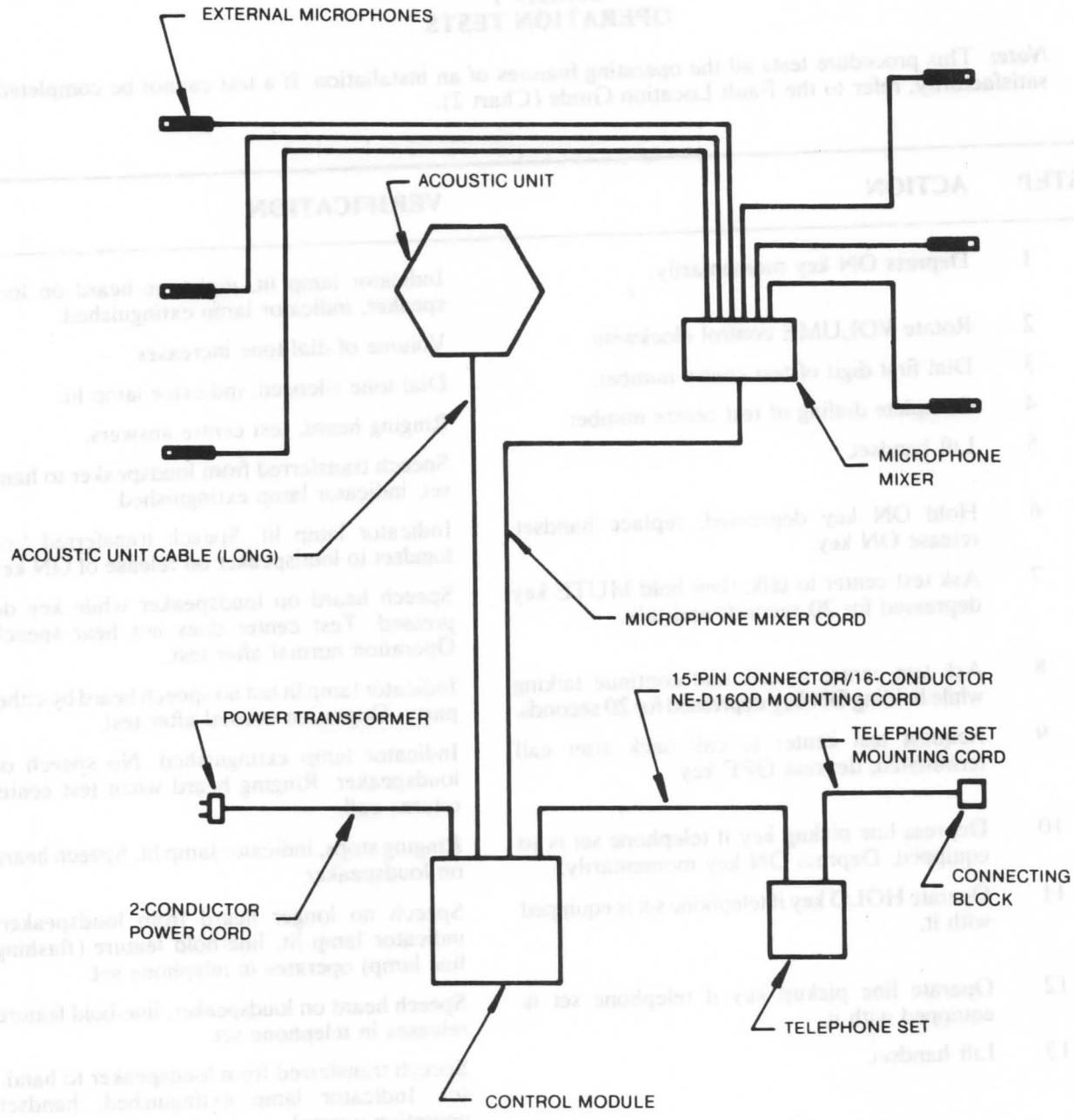

Fig. 4 — Connections for block diagram of CONFERENCE 2000 with customer-provided microphones and mixer unit

CHART 1
OPERATION TESTS

Note: This procedure tests all the operating features of an installation. If a test cannot be completed satisfactorily, refer to the Fault Location Guide (Chart 2).

STEP	ACTION	VERIFICATION
1	Depress ON key momentarily.	Indicator lamp lit, dial tone heard on loudspeaker, indicator lamp extinguished.
2	Rotate VOLUME control clockwise.	Volume of dial tone increases.
3	Dial first digit of test centre number.	Dial tone silenced, indicator lamp lit.
4	Complete dialing of test centre number.	Ringing heard, test centre answers.
5	Lift handset.	Speech transferred from loudspeaker to handset, indicator lamp extinguished.
6	Hold ON key depressed, replace handset, release ON key.	Indicator lamp lit. Speech transferred from handset to loudspeaker on release of ON key.
7	Ask test center to talk, then hold MUTE key depressed for 20 seconds and talk.	Speech heard on loudspeaker while key depressed. Test center does not hear speech. Operation normal after test.
8	Ask test centre to talk and continue talking while holding ON key depressed for 20 seconds.	Indicator lamp lit but no speech heard by either party. Operation normal after test.
9	Request test center to call back after call terminated, depress OFF key.	Indicator lamp extinguished. No speech on loudspeaker. Ringing heard when test center returns call.
10	Depress line pickup key if telephone set is so equipped. Depress ON key momentarily.	Ringing stops, indicator lamp lit. Speech heard on loudspeaker.
11	Operate HOLD key if telephone set is equipped with it.	Speech no longer heard from loudspeaker, indicator lamp lit, line-hold feature (flashing line lamp) operates in telephone set.
12	Operate line pickup key if telephone set is equipped with it.	Speech heard on loudspeaker, line-hold feature releases in telephone set.
13	Lift handset.	Speech transferred from loudspeaker to handset. Indicator lamp extinguished, handset operation normal.
14	Replace handset.	Call terminated.
15	Switch from internal to external microphone if applicable. Dial test center number.	Speech transmission normal.

CHART 2
FAULT LOCATION GUIDE

FAULT INDICATION	ACTION
Indicator lamp does not light.	Hold ON key depressed. Indicator lamp should light; if not lit: • Check power transformer connections • Check power source • Check transformer output. If fault remains, it is a circuit defect. Replace control module.
No speech or dial tone on loudspeaker.	Lift handset, check for presence of speech. If speech is present: • Check ring and tip connections from telephone • Check that P3 and P4 leads are not shorted • Check connections from acoustic unit to control module. If fault remains, replace control module or acoustic unit.
Indicator lamp is extinguished when transmitting with no receive signal present.	This is a circuit defect. Replace control module.
Speech remains on loudspeaker or lamp remains lit when handset is lifted.	Check connections in telephone set. If fault remains, replace control module.
Far-end party hears speech with MUTE key depressed.	Replace control module.
No receive speech heard with MUTE key depressed.	Replace control module.
When ON key is depressed, speech remains on loudspeaker or audio transmission continues.	Replace control module.
When OFF key is depressed, indicator lamp remains lit or speech remains on loudspeaker.	Replace control module.
When OFF key is depressed, indicator lamp remains lit or speech remains on loudspeaker.	Replace control module.
If on-hook dialing is provided, dial tone remains on loudspeaker after dialing first digit.	Check normal handset dialing. Also check tip and ring connections from telephone set to control module. If fault remains, replace control module.
On multiline telephone sets equipped with hold feature, hold does not work.	Check that hold feature works with handset, and check connections in telephone set. If fault remains, replace control module.
With on-hook dialing, dial pulses heard on loudspeaker.	Check P3 and P4 connections in telephone set. If fault remains, replace control module.

TABLE D
CONNECTIONS FOR NE-500- TYPE TELEPHONE SETS

				NE-500C/D, NE-554B‡ REWIRED FOR A LEAD CONTROL		NE-500L/M NE-500LR (nondial)		NE-500R/S NE-500RR (nondial)	
				NE-1A1, NE-1A2 KTS INDIVIDUAL OR BRIDGED CO OR PBX LINE					
	ITEM	LEAD COLORS	LEAD DESIGNATION	SET TERMINALS	NTWK TERMINALS	SET TERMINALS	NTWK TERMINALS	SET TERMINALS	NTWK TERMINALS
TELEPHONE SET CONVERSIONS	Line switch leads	(S-W) (S-G)		 C1	G	5 C1+			
	Telephone line leads	(R) (G)	R T		L2 F		L2 F		L2 G
	Dial leads	(W) (W)		 C2	RR	 C2	RR		
NE-D16QD CORD	CO or PBX Telephone line	(BL-W) (W-BL)	R1 T1		L2 RR		L2 RR	3 E2	
	Automatic cutoff of unit when transferring to handset and key telephone system A lead control	(S-R) (R-S) (BL-BK) (BK-BL)	LK LK1 GND or A1 AG or A	 C1 *	G G * or L1 §	5 C1 5 6		4 * E1 5	
	On-hook dialing	(O-R) (R-O) (V-O) (O-V) (BR-Y)	P3 or 1 R P4 or 1T B5 MB5 M5	C3 * C2 C3	 C	C3 * C2 C3	 C	6 1	

* Insulate and store.
+ Leads designated C1, C2, etc. in table must be bridged to leads with identical designations using QCM12A connectors or spare terminals.
‡ On-hook dialing is not available with the NE-554B telephone set.
§ When A lead control is required

TABLE E
CONNECTIONS FOR NE-2500- TYPE TELEPHONE SETS

				NE-2500D,NE-2500DQD§		NE-2500SQA**	
				NE-1A1 OR NE-1A2 KTS INDIVIDUAL OR BRIDGED CO OR PBX LINE			
	ITEM	LEAD COLORS	LEAD DESIGNATIONS	SET TERMINALS	NTWK TERMINALS	SET TERMINALS	NTWK TERMINALS
TELEPHONE SET CONVERSIONS	Line switch leads	(S-W) (S-G)		C1+	G		
	CO or PBX Telephone line	(G)	T		RR		
	NE-35Q3B,-B1,-B2, or NE-35Q3L,-L1,-L2 DIGITONE dial for on-hook dialing	(O-BK) (V-W) (V-G) (R) (R-G) (W)		C2	C L1 Y R X		
NE-D16QD CORD	Telephone line to unit	(BL-W) (W-BL)	R1 T1		L2 L1	E2 5	
	Automatic cutoff of unit when transferring to hand-set and key telephone system A lead control	(S-R) (R-S) (BL-BK) (BK-BL)	LK LK1 GND or A1 AG or A	C1	G G *	4 * 3 E1 ‡	
	On-hook dialing (when using NE-35Q3B or equivalent dial)	(O-R) (R-O)	P3 or 1R P4 or 1T	C2	*	6 2	

* Insulate and store.
\+ C1, C2, etc., are designations for spare terminals or connectors.
‡ Insulate if not used for A lead control.
§ On-hook dialing not available unless proper DIGITONE dial is used. The NE-2500D telephone set requires a 4-conductor line cord.
** The NE-2500SQA telephone set uses an NE-35Q3L2 DIGITONE dial.

TABLE F
CONNECTIONS FOR CONTEMPRA TELEPHONE SETS

				NE-44A OR EQUIVALENT CONNECTING BLOCK	QSK100A/B, QSK2100A/B, QSK191B, QSK2191B†			
					INDIVIDUAL OR BRIDGED CO OR PBX LINE		NE-1A1, NE-1A2 KTS	
	ITEM	LEAD COLORS	LEAD DESIGNATION	TERMINAL	SET TERMINALS	NTWK TERMINALS	SET TERMINALS	NTWK TERMINALS
TELEPHONE SET CONVERSIONS	Line switch leads	(S)				L3		L3
		(S-Y)			G		G	
		(S-BR)				G1		G1
	External connect-ion with NE-D6QB mounting cord	(R)	R	1	X ‡	(or C)	X ‡	(or C)
		(G)	T	2	L1		L1	
		(Y)	A1	5	G		G	
		(BK)	A	4	* (or Y)		Y	
		(W)	LK1	3		G1		G1
		(BL)		§	*		*	
NE-D16QD CORD	CO or PBX Telephone line	(BL-W)	R1 §	1	X ‡	(or C)	X ‡	(or C)
		(W-BL)	T1	2	L1		L1	
	Automatic cutoff unit when transferring to handset and key telephone system system A lead control	(S-R)	LK	5	G		G	
		(R-S)	LK1	3		G1		G1
		(BL-BK)	GND or A1	5	G		G	
		(BK-BL)	AG or A	4	*		Y	
	On-hook dialing	(O-R)	P3 or 1R		*		*	
		(R-O)	P4 or 1T		*		*	

* Insulate and store.

† On-hook dialing is not available with these telephone sets.

‡ This terminal applies only to DIGITONE sets: use network terminal C otherwise.

§ For wall mounted rotary dial sets, connect ringer line lead (red) to terminal L2 and connect L2 to C using an NE-M1W cord. For bridged ringing, connect ringer across R and T of the telephone line.

TABLE G
CONNECTIONS TO NE-5664- TYPE TELEPHONE SETS

				NE-564HQAA, BA, CA, DA, EA, FA, GA, JA§							
				NE-1A KTS				NE-1A1, NE-1A2 KTS			
				STN. BUSY LAMP, ADD-ON LAMP				STN. BUSY LAMP, ADD-ON CKT.			
	STATION BUSY LAMP CIRCUIT OR ADD-ON			NO		YES		NO		YES	
				TERMINALS		TERMINALS		TERMINALS		TERMINALS	
	ITEM	LEAD COLORS	LEAD DESIGNATIONS	KEY	NTWK	KEY	NTWK	KEY	NTWK	KEY	NTWK
TELEPHONE SET CONVERSIONS	Line switch leads	(S-W) (S-G) (S-Y)		1B N	L2	SG N	L2	1B R	L2	1B R	L2
	Hold key leads	(Y) (O-BK†)		R M		R M		M N		M N	
	Dial leads	(W) (W)		ON	RR	ON	RR	ON	RR	ON	RR
	Diode Assembly PO522718 or diode NSQ8034L1 (IN4384) for station busy lamp circuit	NE-M1W Cord								1 N	
NE-D16QD CORD	CO or PBX telephone line	(BL-W) (W-BL)	R1 T1	N	RR	N	RR	R	RR	R	RR
	Automatic cutoff of unit when transferring to handset and key telephone system A lead control	(S-R) (R-S) (BL-BK) (BK-BL)	LK LK1 GND or A1 AG or A	1B 1B *	L2	SG SG 1	L2	1B 1B N	L2	1B 1B 1	L2
	On-hook dialing	(O-R) (R-O) (V-O) (O-V) (BR-Y)	P3 or 1R P4 or 1T B5 MB5 M5	ON1 * ON ON1	C	ON1 * ON ON1	C	ON1 * ON ON1	C	ON1 * ON ON1	C

* Insulate and store.

† In some telephone sets this lead is (Y-BK): NE-564HDRN,HDN,HBRN,NE-554B,NE-565HBRN,HDRN,LBRN,DRN,HQF.

‡ Non-dial telephone sets, dial leads and on-hook dialing do not apply.

§ Connections for the sets using this column are dependant on the vintage of the set wiring, therefore prior to connecting verify that the BL lead (Y-BR) from the telephone set mounting cord is terminated on terminal 1 of the key terminal strip.

TABLE H
CONNECTIONS TO NE-2564- TYPE TELEPHONE SETS

				NE-2564HQE,F+, NE-2565HQE,F							
				NE-1A KTS STN. BUSY LAMP OR ADD-ON CKT				NE-1A1, NE-1A2 KTS STN. BUSY LAMP OR ADD-ON CKT			
				NO		YES		NO		YES	
				TERMINALS		TERMINALS		TERMINALS		TERMINALS	
	ITEM	LEAD COLORS	LEAD DESIGNATIONS	KEY	NTWK	KEY	NTWK	KEY	NTWK	KEY	NTWK
TELEPHONE SET CONVERSIONS	Line switch leads	(S-W)		1B		SG		1B		1B	
		(S-G)			L2‡		L2‡		L2‡		L2‡
		(S-Y)		N		N		R		R	
	Hold key leads	(Y)		R		R		M		M	
		(O-BK)		M		M		N		N	
	NE-35Q3B or NE-35Q3B1 DIGITONE dial for on-hook dialing	(O-BK)			C		C		C		C
		(V-W)		ON1		ON1		ON1		ON1	
		(V-G)			G		G		G		G
		(R)			Y		Y		Y		Y
		(R-G)			R		R		R		R
		(W)			X		X		X		X
	Diode assembly PO522718 or diode NSQ8034L1 (IN4334) for station busy lamp circuit	NE-M1W Cord								1	
										N	
NE-D16QD CORD	CO or PBX telephone line	(BL-W)	R1	N		N		R		R	
		(W-BL)	T1		G		G		G		G
	Automatic cutoff of unit when transferring to handset and key telephone system A lead control	(S-R)	LK	1B		SG		1B		1B	
		(R-S)	LK1		L2		L2		L2		L2
		(BL-BK)	BND or A1	1B		SG		1B		1B	
		(BK-BL)	AG or A	*		1		N		1	
	On-hook dialing (when using NE-35Q3B or equivalent dial)	(O-R)	P3 or 1R	ON1		ON1		ON1		ON1	
		(R-O)	P4 or 1T	*		*		*		*	

* Insulate and store.

\+ An NE-35Q3B dial (or equivalent) must be installed on NE-2564HQE, F telephone sets for on-hook dialing.

‡ In some telephone sets the busy lamp lead may be factory-wired to terminal L2. In this case, use a spare terminal or QCM12A connector to connect the (S-G) line switch lead to the LK1 (R-S) lead.

TABLE I
CONNECTIONS TO NE-630- AND NE-2630- TYPE TELEPHONE SETS

TELEPHONE SET CONVERSIONS	ITEM	LEAD COLORS	LEAD† DESIGNATIONS	NE-630, NE-631, NE-634, NE-635 TYPES								NE-1630, NE-1631, NE-1634, NE-1635, NE-2630, NE-2631, NE-2634, NE-2635 TYPES							
				NE-1A KTS				NE-1A1, NE-1A2 KTS				NE-1A KTS				NE-1A1, NE-1A2 KTS			
				STN. BUSY LAMP, ADD-ON CKT				STN. BUSY LAMP, ADD-ON CKT				STN. BUSY LAMP, ADD-ON CKT				STN. BUSY LAMP, ADD-ON CKT			
				NO		YES		NO		YES		NO		YES		NO		YES	
				TERMINALS		TERMINALS		TERMINALS		TERMINALS		TERMINALS		TERMINALS		TERMINALS		TERMINALS	
				BOARD	NTWK	BOARD	NTWK	BOARD	NTWK	BOARD	NTWK	BOARD	NTWK	BOARD	NTWK	BOARD	NTWK	BOARD	NTWK
				Use X wiring				Use Z wiring		Use X and Y wiring		Use X wiring				Use Z wiring		Use X and Y wiring	
NE-D16QD CORD	CO or PBX Telephone line	(BL-W) (W-BL)	R1 T1	1	RR	1	RR	1	RR	1	RR	2 10		2 10		2 10		2 10	
	Automatic cutoff of unit when transferring to hand-set and key telephone system A lead control	(S-R) (R-S) (BL-BK) (BK-BL)	LK LK1 GND or A1 AG or A	• 4	L1 L2	• 4	L1 L2	• 4	L1 G	• 4	L1 L2	9 • 1 6		9 • 1 6		9 • 1 6		9 • 1 5	
	On-hook dialing	(O-R) (R-O)	P3 or 1R P4 or 1T	W BB		W BB		W BB		W BB		11 12		11 12		11 12		11 12	

* Insulate and store.

† These leads may terminate on terminals other than those listed in this table depending on the vintage of the telephone set. Refer to the wiring diagram for the telephone set.

TABLE J
CONNECTIONS FOR STROMBERG-CARLSON SINGLE-LINE TELEPHONE SETS ⊡

				S-C 500D, S-C 554B+				S-C 2500D++				S-C 2554B‡			
				INDIVIDUAL OR BRIDGED CO OR PBX LINE				NE-1A1, NE-1A2 OR EQUIVALENT KTS							
				FROM TERMINALS		TO TERMINALS		FROM TERMINALS		TO TERMINALS		FROM TERMINALS		TO TERMINALS	
	ITEM	LEAD COLORS	LEAD DESIGNATIONS	SET	NTWK	SET	NTWK	SET	NTWK	SET	NTWK	SET	NTWK	SET	NTWK
TELEPHONE SET CONVERSIONS	Line switch leads	(S-W)** (S-G)			F L1	C1+	G	1	L1	C1	L1		G	3 1	
	Telephone line leads	(R) (G)	R T		L1		L2 F		L1	1	L2	1		2	G
	Dial leads	(W) (W)			GN R	C2	RR								
	A Control leads		A A1				L1§ G§			C2§	L1§				L1§ G§
NE-D16QD CORD	CO or PBX line	(BL-W) (W-BL)	R1 T1				L2 RR			1	L2			2 3	
	Automatic cutoff of unit when transferring to handset, and key telephone system A lead control	(S-R) (R-S) (BL-BK) (BK-BL)	LK LK1 GND or A1 AG or A			C1 *	G G or L1§			C1 * or C2§	L1 L1			3 1 3 *	or L1§
	On-hook dialing	(O-R) (R-O) (V-O) (O-V) (BR-Y)	P3 or 1R P4 or 1T B5 MB5 M5			C3 * C2 C3	C			*				*	

* Insulate and store.
\+ Leads designated C1, C2, etc., must be bridged to leads with identical designations using QCM12A connectors or spare terminals.
‡ On-hook dialing not available.
§ Used only when A lead control is required.
** On the S-C 2554B telephone set these colors are (W) and (G).
++ On-hook dialing not available unless an NE-35Q3B or equivalent DIGITONE dial is used.

⊡ Not required by Bell Canada

TABLE K
CONNECTIONS FOR STROMBERG-CARLSON MULTILINE TELEPHONE SETS ⊡

				1704-6, 1704-6A, 1704-6B 1704-12, 1704-12A, 1704-12B					1704-6T, 1704-6AT, 1704-6BT 1704-12T, 1704-12AT, 1704-12BT ‡				
				S-C 1A2, NE-1A1, NE-1A2 OR EQUIVALENT KTS									
				STATION BUSY LAMP CIRCUIT					STATION BUSY LAMP CIRCUIT				
					NO		YES			NO		YES	
					TERMINALS		TERMINALS			TERMINALS		TERMINALS	
	ITEM	LEAD COLORS	LEAD DESIGNATIONS	FROM	KEY	NTWK	KEY	NTWK	FROM	KEY	NTWK	KEY	NTWK
TELEPHONE SET CONVERSIONS	Line switch leads	(S-Y) (S-W) (S-G)		F 19-20 24	20 C1+	C	20 C1	C	19-20 24	19-20 C1		19-20 C1	
	Key leads	(Y) (BL)		L1 C		F L1		F L1					
	Dial leads	(W) (W)		GN R	C2	RR	C2	RR					
	Diode assembly PO522718 or diode						1					1	
	NSQ8034L1 (1N4384) for station busy lamp						24					24	
NE-D16QD CORD	CO or PBX line	(BL-W) (W-BL)	R1 T1			L1 RR		L1 RR			C L1		C L1
	Automatic cutoff of unit when transferring to handset, and key telephone system A lead control	(S-R) (R-S) (BL-BK) (BK-BL)	LK LK1 GND or A1 AG or A		20 C1 20 24		20 C1 20 1			19-20 C1 19-20 24		19-20 C1 19-20 1	
	On-hook dialing	(O-R) (R-O) (V-O) (O-V) (BR-Y)	P3 or 1R P4 or 1T B5 MB5 M5		C3 * C2 C3	C	C3 * C2 C3	C		* *		* *	

* Insulate and store.
\+ C1, C2, etc., are designations for spare terminals or connectors.
‡ On-hook dialing is not available unless the proper dial is used.

⊡ Not required by Bell Canada

TABLE L
CONNECTIONS FOR ITT KELLOGG SINGLE-LINE TELEPHONE SETS ⊡

				K-500, K-554 ‡				K-2500 ++				K-2554 ‡			
				INDIVIDUAL OR BRIDGED CO OR PBX LINE K-1A1, K-1A2, NE-1A1, NE-1A2 OR EQUIVALENT KTS											
				FROM TERMINALS		TO TERMINALS		FROM TERMINALS		TO TERMINALS		FROM TERMINALS		TO TERMINALS	
	ITEM	LEAD COLORS	LEAD DESIGNATIONS	SET	NTWK	SET	NTWK	SET	NTWK	SET	NTWK	SET	NTWK	SET	NTWK
TELEPHONE SET CONVERSIONS	Line switch leads	(S-W)** (S-G)			F L1	G C1+			F L1	C1	G		G	3 1	
	Telephone line leads	(R) (G)	R T				L2 F		L1		L2 F	1		2	G
	Dial leads	(W) (W)			GN R	C2	RR								
	A Control leads		A A1				L1 § G §				L1 § G §			3 §	C1 §
NE-DI6QD CORD	CO or PBX line	(BL-W) (W-BL)	R1 T1				L2 RR				L2 F			2	G
	Automatic cutoff of unit when transferring to handset and key telephone system A lead control	(S-R) (R-S) (BL-BK) (BK-BL)	LK LK1 GND or A1 AG or A			C1 * or L1 §	G G			C1 *or L1 §	G G			3 1 3 *	or C1 §
	On-hook dialing	(O-R) (R-O) (V-O) (O-V) (BR-Y)	P3 or 1R P4 or 1T B5 MB5 M5			C3 * C2 C3	C			* *				* *	

* Insulate and store.
\+ C1, C2, etc. are designations for spare terminals or connectors.
‡ On-hook dialing not available.
§ Used only when A lead control is required.
** On the K-2554 telephone set these colors are (W) and (G).
++ On-hook dialing not available unless an NE-35Q3B or equivalent DIGITONE dial is used.

⊡ Not required by Bell Canada

TABLE M
CONNECTIONS FOR ITT KELLOGG MULTILINE PUSHBUTTON DIAL TELEPHONE SETS ⊡

				2564- - (BA) 30/40M 2564- - (BA) 30/40M									
				NE-1A OR EQUIVALENT KTS					K-1A1, K-1A2, NE-1A1, NE-1A2 OR EQUIVALENT KTS				
				STATION BUSY LAMP CIRCUIT					STATION BUSY LAMP CIRCUIT				
					NO		YES			NO		YES	
					TERMINALS		TERMINALS			TERMINALS		TERMINALS	
	ITEM	LEAD COLORS	LEAD DESIGNATIONS	FROM	KEY	NTWK	KEY	NTWK	FROM	KEY	NTWK	KEY	NTWK
TELEPHONE SET CONVERSIONS	Line switch leads	(S-W) (S-G) (S-Y)		1B N 9	1B N	L1	SG N	L1	1B N 9	1B 9	L1	1B 9	L1
	Hold key leads	(Y) (O-BK)		M N	9 M		9 M		M N	M N		M N	
	Dial leads	(W) (W)	R	GN 8		RR 8		RR R	GN 8		RR 8		RR
	Diode assembly PO522718 or diode NSQ8034L1 (1N4384) for station busy lamp	NE-M1W Cord										N	L2 G
NE-D16QD CORD	CO or PBX line	(BL-W) (W-BL)	R1 T1		N	F	N	F		9	F	9	F
	Automatic cutoff of unit when transferring to handset, and key telephone system A lead control	(S-R) (R-S) (BL-BK) (BK-BL)	LK LK1 GND or A1 AG or A		1B 1B *	L1	SG SG	L1 L2		1B 1B N	L1	1B 1B N	L1
	On-hook dialing	(O-R) (R-O) (V-O) (O-V) (BR-Y)	P3 or 1R P4 or 1T B5 MB5 M5		7 * 8 7	C	7 * 8 7	C		7 * 8 7	C	7 * 8 7	C

* Insulate and store.

⊡ Not required by Bell Canada

TABLE N
CONNECTIONS FOR ITT KELLOGG MULTILINE ROTARY DIAL TELEPHONE SETS ⊡

				564- - (BA) 30/40M+ 565- - (BA) 30/40M+									
				NE-1A OR EQUIVALENT KTS					K-1A1, K-1A2, NE-1A1, NE-1A2 OR EQUIVALENT KTS				
				STATION BUSY LAMP CIRCUIT					STATION BUSY LAMP CIRCUIT				
					NO		YES			NO		YES	
					TERMINALS		TERMINALS			TERMINALS		TERMINALS	
	ITEM	LEAD COLORS	LEAD DESIGNATIONS	FROM	KEY	NTWK	KEY	NTWK	FROM	KEY	NTWK	KEY	NTWK
TELEPHONE SET CONVERSIONS	Line switch leads	(S-W) (S-G) (S-Y)		1B N 9	1B N	 L1 	SG N	 L1 	1B N 9	1B 9	 L1 	1B 9	 L1
	Hold key leads	(Y) (O-BK)		M N	9 M		9 M		M N	M N		M N	
	Dial leads												
	Diode assembly PO522718 or diode NSQ8034L1 (1N4384) for station busy lamp	NE-M1W Cord										N	L2 G
NE-D16QD CORD	CO or PBX line	(BL-W) (W-BL)	R1 T1		N	 F	N	 F		9	 F	9	 F
	Automatic cutoff of unit when transferring to handset, and key telephone system A lead control	(S-R) (R-S) (BL-BK) (BL-BK)	LK LK1 GND or A1 AG or A1		1B 1B *	 L1 	SG SG 	 L1 L2		1B 1B N	 L1 	1B 1B N	 L1

* Insulate and store.
\+ On-hook dialing is not available unless the proper dial is used.

⊡ Not required by Bell Canada

TABLE O
CONNECTIONS FOR ITT KELLOGG MULTILINE PUSHBUTTON DIAL TELEPHONE SETS, e/w NE-35Q3B DIGITONE DIAL ⊡

				2564- - (BA) 30/40M 2564- - (BA) 30/40M EQUIPPED WITH NE-35Q3B DIGITONE DIAL OR EQUIVALENT									
				NE-1A OR EQUIVALENT KTS					K-1A1, K-1A2, NE-1A1, NE-1A2 OR EQUIVALENT KTS				
				STATION BUSY LAMP CIRCUIT					STATION BUSY LAMP CIRCUIT				
					NO		YES			NO		YES	
					TERMINALS		TERMINALS			TERMINALS		TERMINALS	
	ITEM	LEAD COLORS	LEAD DESIGNATIONS	FROM	KEY	NTWK	KEY	NTWK	FROM	KEY	NTWK	KEY	NTWK
TELEPHONE SET CONVERSIONS	Line switch leads	(S-W) (S-G) (S-Y)		1B N 9	1B N	 L1 	SG N	 L1 	1B N 9	1B 9	 L1 	1B 9	 L1
	Hold key leads	(G) (Y) (O-BK)		F M N	 9 M	RR 	 9 M	RR 	F M N	 M N	RR 	 M N	RR
	NE-35Q3B or equivalent DIGITONE dial for on-hook dialing	(O-BK) (V-W) (V-G) (R) (R-G) (W)			 7 M 2 1	C R 	 7 8 2 1	C R 		 7 8 2 1	C R 	 7 8 2 R 1	C
NE-D16QD CORD	Diode assembly PO522718 or diode NSQ8034L1 (1N4384) for station busy lamp	NE-M1W Cord										 N	L2 G
	CO or PBX line	(BL-W) (W-BL)	R1 T1		N 8		N 8			9 8		9 8	
	Automatic cutoff of unit when transferring to handset, and key telephone system A lead control	(S-R) (R-S) (BL-BK) (BK-BL)	LK LK1 GND or A1 AG or A		1B 1B *	 L1 	SG SG 	 L1 L2		1B 1B N	 L1 	1B 1B 	 L1 L2
	On-hook dialing	(O-R) (R-O)	P3 or 1R P4 or 1T		7 *		7 *			7 *		7 *	

* Insulate and store.

⊡ Not required by Bell Canada

TABLE P
CONNECTIONS FOR AUTOMATIC SINGLE-LINE TELEPHONE SETS ⊡

				TYPE 80 WITH ROTARY DIAL				TYPE 90M ‡ WITH ROTARY DIAL			
				INDIVIDUAL OR BRIDGED CO OR PBX LINE							
				FROM		TO		FROM		TO	
				TERMINALS		TERMINALS		TERMINALS		TERMINALS	
	ITEM	LEAD COLORS	LEAD DESIGNATIONS	SET	NTWK	SET	NTWK	SET	NTWK	SET	NTWK
TELEPHONE SET CONVERSIONS	Line switch leads	(BK) (Y)			10 11	C1 † C2			10 11	C1 C2	
	Jumper or NE-M1W cord						10 11				10 11
	Dial leads	(W)			2	C3					
NE-D16QD CORD	CO or PBX line	(BL-W) (W-BL)	R1 T1				1 8			10 8	
	Automatic cutoff of unit when transferring to handset, and key telephone system A lead control	(S-R) (R-S) (BL-BK) (BK-BL)	LK LK1 GND or A1 AG or A			C2 C1 C2 *				C2 C1 C2 *	
	On-hook dialing	(O-R) (R-O) (V-O) (O-V) (BR-Y)	P3 or 1R P4 or 1T B5 MB5 M5			* C4 C3 C4	2			* *	

* Insulate and store.
† Leads designated C1, C2, etc., must be bridged to leads with identical designations using QCM12A connectors or spare terminals.
‡ On-hook dialing not available.

⊡ Not required by Bell Canada

TABLE Q
CONNECTIONS FOR AUTOMATIC ELECTRIC MULTILINE ROTARY DIAL TELEPHONE SETS ⊡

				ARRANGED FOR HOLD KEY AND 5 PICKUP KEYS					ARRANGED FOR 6 PICKUP KEYS				
				AE-10A1, AE-10A2, NE-1A1, NE-1A2 KTS									
				STN. BUSY LAMP, ADD-ON CKT					STN. BUSY LAMP, ADD-ON CKT				
					NO		YES			NO		YES	
					TERMINALS		TERMINALS			TERMINALS		TERMINALS	
	ITEM	LEAD COLORS	LEAD DESIGNATIONS	FROM	KEY	NTWK	KEY	NTWK	FROM	KEY	NTWK	KEY	NTWK
TELEPHONE SET CONVERSIONS	Line switch leads	(BK) (Y) (W)		R 11 N	A C1†	2	A C1	2	N 11 M	A C1	2	A C1	2
	Jumper or NE-M1W cord	(BL)		A 2	R	11	R	11	A 2	N	11	N	11
	Dial leads	(W)		2	C2		C2		2	C2		C2	
	Diode assembly PO522718 or diode NSQ8034L1 (1N4384) for station busy lamp						RC N					RC M	
NE-D16QD CORD	CO or PBX line	(BL-W) (W-BL)	R1 T1		A	1	A	1		A	1	A	1
	Automatic cutoff of unit when transferring to handset, and key telephone system A lead control	(S-R) (R-S) (BL-BK) (BK-BL)	LK LK1 GND or A1 AG or A		1B C1 1B N		1B C1 1B RC			1B C1 1B M		1B C1 1B RC	
	On-hook dialing	(O-R) (R-O) (V-O) (O-V) (BR-Y)	P3 or 1R P4 or 1T B5 MB5 M5		* C3 C2 C3	2	* C3 C2 C3	2		* C3 C2 C3	2	* C3 C2 C3	2

* Insulate and store.
† C1, C2, etc., are designations for spare terminals or connectors.

⊡ Not required by Bell Canada

TABLE R
CONNECTIONS FOR AUTOMATIC ELECTRIC MULTILINE PUSHBUTTON DIAL TELEPHONE SETS ⊡

				TYPE 186 WITH TOUCH CALLING UNIT ‡									
				ARRANGED FOR HOLD KEY AND 5 PICKUP KEYS					ARRANGED FOR 6 PICKUP KEYS				
				AE-10A1, AE-10A2, NE-1A1, NE-1A2									
				STATION BUSY LAMP CIRCUIT					STATION BUSY LAMP CIRCUIT				
					NO		YES			NO		YES	
					TERMINALS		TERMINALS			TERMINALS		TERMINALS	
	ITEM	LEAD COLORS	LEAD DESIGNATIONS	FROM	KEY	NTWK	KEY	NTWK	FROM	KEY	NTWK	KEY	NTWK
TELEPHONE SET CONVERSIONS	Line switch leads	(W)		N	C1 †		C1		M	C1		C1	
	Diode assembly PO522718 or diode NSQ8034L1 (1N4384) for station busy lamp						RC N					RC M	
NE-D16QD CORD	CO or PBX line	(BL-W) (W-BL)	R1 T1		R A		R A			N A		N A	
	Automatic cutoff of unit when transferring to handset, and key telephone system A lead control	(S-R) (R-S) (BL-BK) (BK-BL)	LK LK1 GND or A1 AG or A		1B C1 1B N		1B C1 1B RC			1B C1 1B M		1B C1 1B RC	
	On-hook dialing	(O-R) (R-O)	P3 or 1R P4 or 1T		* *		* *			* *		* *	

* Insulate and store.
† C1, C2, etc. are designations for spare terminals or connectors.
‡ On-hook dialing is not available unless the proper dial is used.

⊡ Not required by Bell Canada

TABLE S
CONNECTIONS FOR AUTOMATIC ELECTRIC 860- TYPE MULTILINE TELEPHONE SETS ⊡

				WITH ROTARY DIAL					WITH TOUCH CALLING UNIT ‡				
				AE-10A1, AE-10A2, NE-1A1, NE-1A2									
				STATION BUSY LAMP CIRCUIT					STATION BUSY LAMP CIRCUIT				
					NO		YES			NO		YES	
					TERMINALS		TERMINALS			TERMINALS		TERMINALS	
	ITEM	LEAD COLORS	LEAD DESIGNATIONS	FROM	KEY	NTWK	KEY	NTWK	FROM	KEY	NTWK	KEY	NTWK
TELEPHONE SET CONVERSIONS	Line switch leads	(BK) (R) (O) (Y)		J E 11 §	J C1 + C1	 8 	H C1 C1	 8 	J			H	
	Jumper or NE-M1W cord				F	 11	E	 11					
	Dial leads	(W)		2	C2		C2						
	Diode assembly PO522718 or diode NSQ8034L1 (1N4384) for station busy lamp						H J					H J	
NE-D16QD CORD	CO or PBX line	(BL-W) (W-BL)	R1 T1			1 8		1 8		E	 8	E	 8
	Automatic cutoff of unit when transferring to handset, and key telephone system A lead control	(S-R) (R-S) (BL-BK) (BK-BL)	LK LK1 GND or A1 AG or A		 * K J	6	 * K H	6		 * K J	6	 * K H	6
	On-hook dialing	(O-R) (R-O) (V-O) (O-V) (BR-Y)	P3 or 1R P4 or 1T B5 MB5 M5		* C3 C2 C3	 2	* C3 C2 C3	 2		* *		* *	

* Insulate and store.
† Leads designated C1, C2, etc., must be bridged to leads with identical designations using QCM12A connectors or spare terminals.
‡ On-hook dialing is not available unless the proper dial is used.

⊡ Not required by Bell Canada

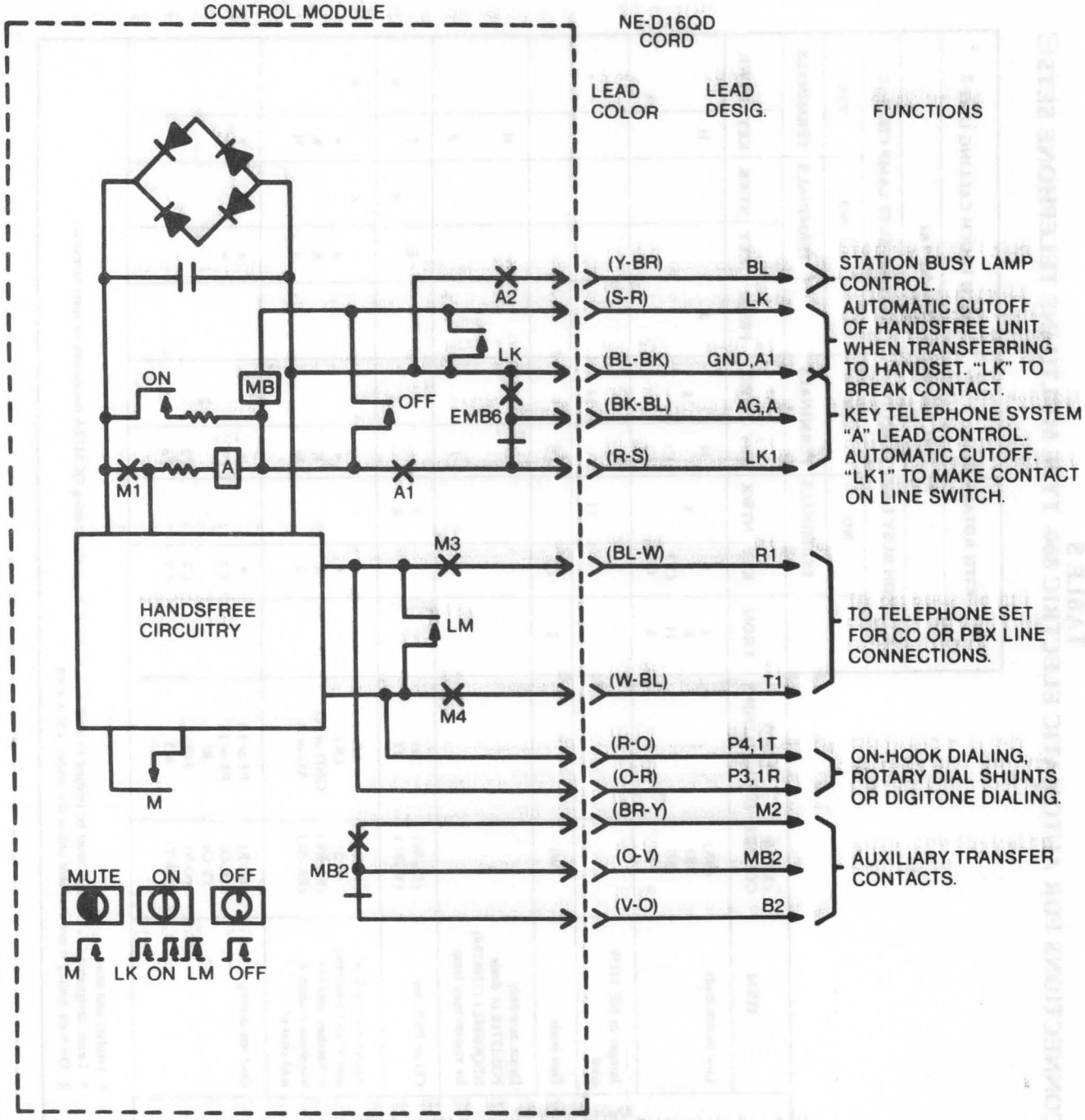

NOTE: ON-HOOK DIALING IS COMPATIBLE WITH ROTARY AND PUSHBUTTON DIAL SETS PROVIDED IT IS PHYSICALLY POSSIBLE ON THE ASSOCIATED TELEPHONE SET.

Fig. 5 — Connections for block diagram of control module equipped with NE-D16QD mounting cord

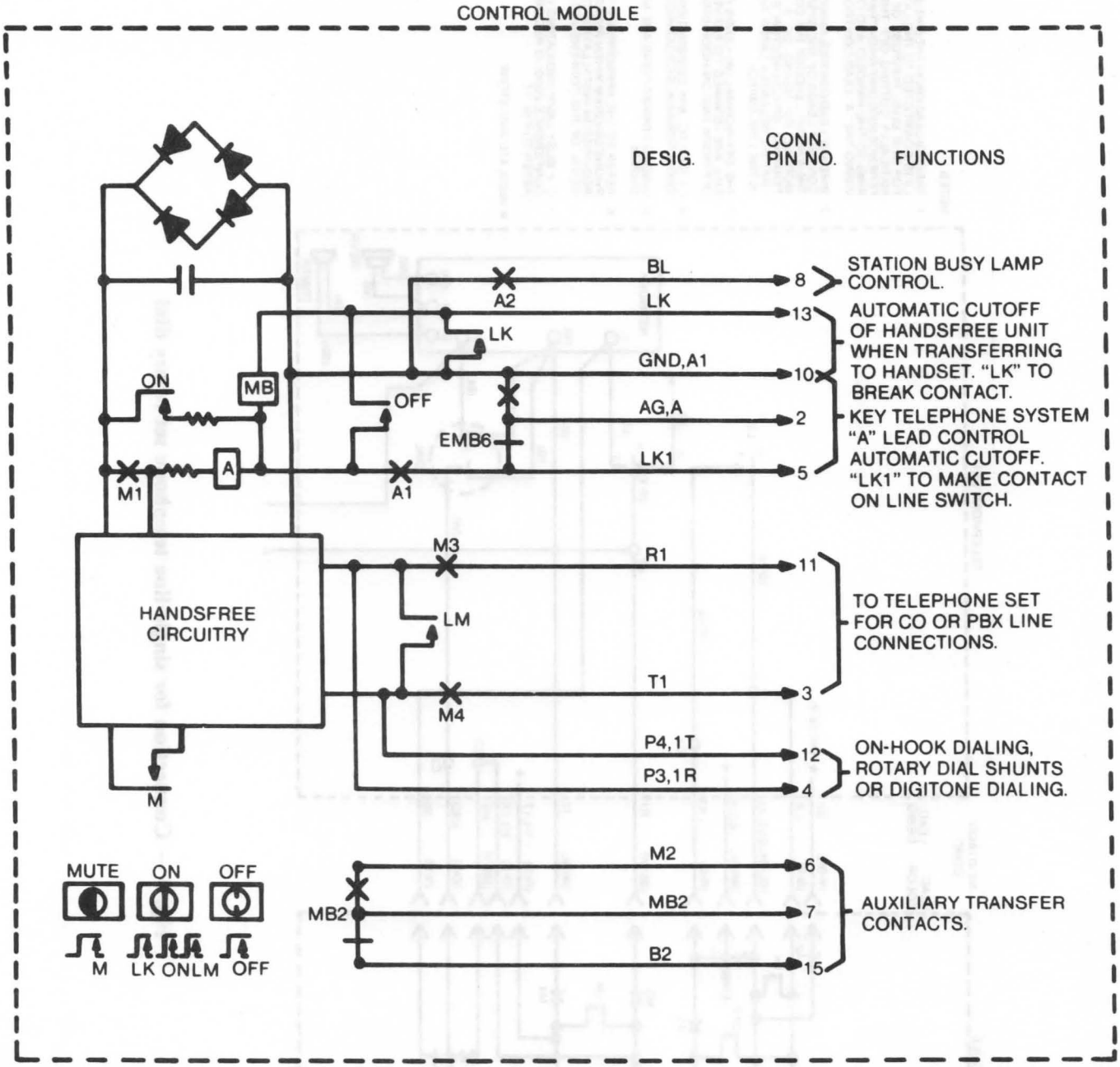

Fig. 6 — Connections for block diagram of control module equipped with a 15-pin connector

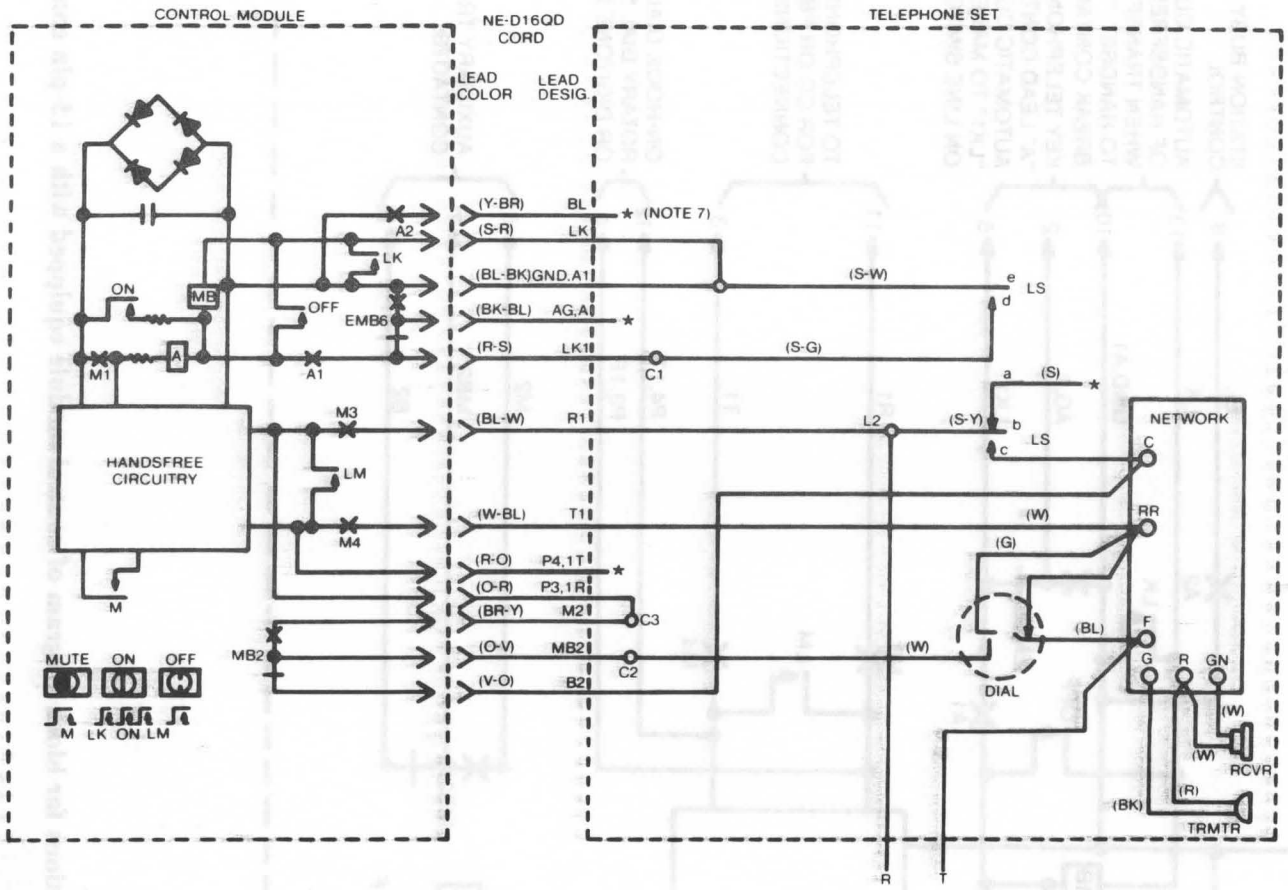

NOTES:

1. THE (S-G) LEAD FROM THE LINE SWITCH LS IS CONNECTED TO THE LK1 LEAD FOR THE DUAL PURPOSE OF AUTOMATICALLY CUTTING OFF THE CONFERENCE 2000 UNIT WHEN TRANSFERRING TO THE HANDSET AND OF PROVIDING THE "A" LEAD CONTROL
2. WHEN "A" LEAD CONTROL IS REQUIRED CONNECT LEADS OF THE SYSTEM TO THE A AND A1 LEADS OF THE CONTROL MODULE BY MEANS OF A SPARE TERMINAL OR CONNECTOR ENSURE THAT d-e RELEASES LATER THAN b-c IN THE LINE SWITCH
3. THE OFF-NORMAL (W) LEADS OF THE DIAL ARE REWIRED TO SERVE BOTH OFF-HOOK AND ON-HOOK DIALING
4. C1, C2, ETC., ARE DESIGNATIONS FOR SPARE TERMINALS OR CONNECTORS
5. RINGER CONNECTIONS ARE NOT SHOWN.
6. REFER TO THE APPROPRIATE TELEPHONE DIAGRAM WHEN REWIRING IS REQUIRED IN INSTALLATION OR REMOVAL OF THE CONFERENCE 2000
7. IF A BUSY LAMP (INDICATING USE OF CONFERENCE 2000) IS REQUIRED REFER TO FIG. 17

★ INSULATE AND STORE

Fig. 7 — Connection for single-line telephone set rotary dial

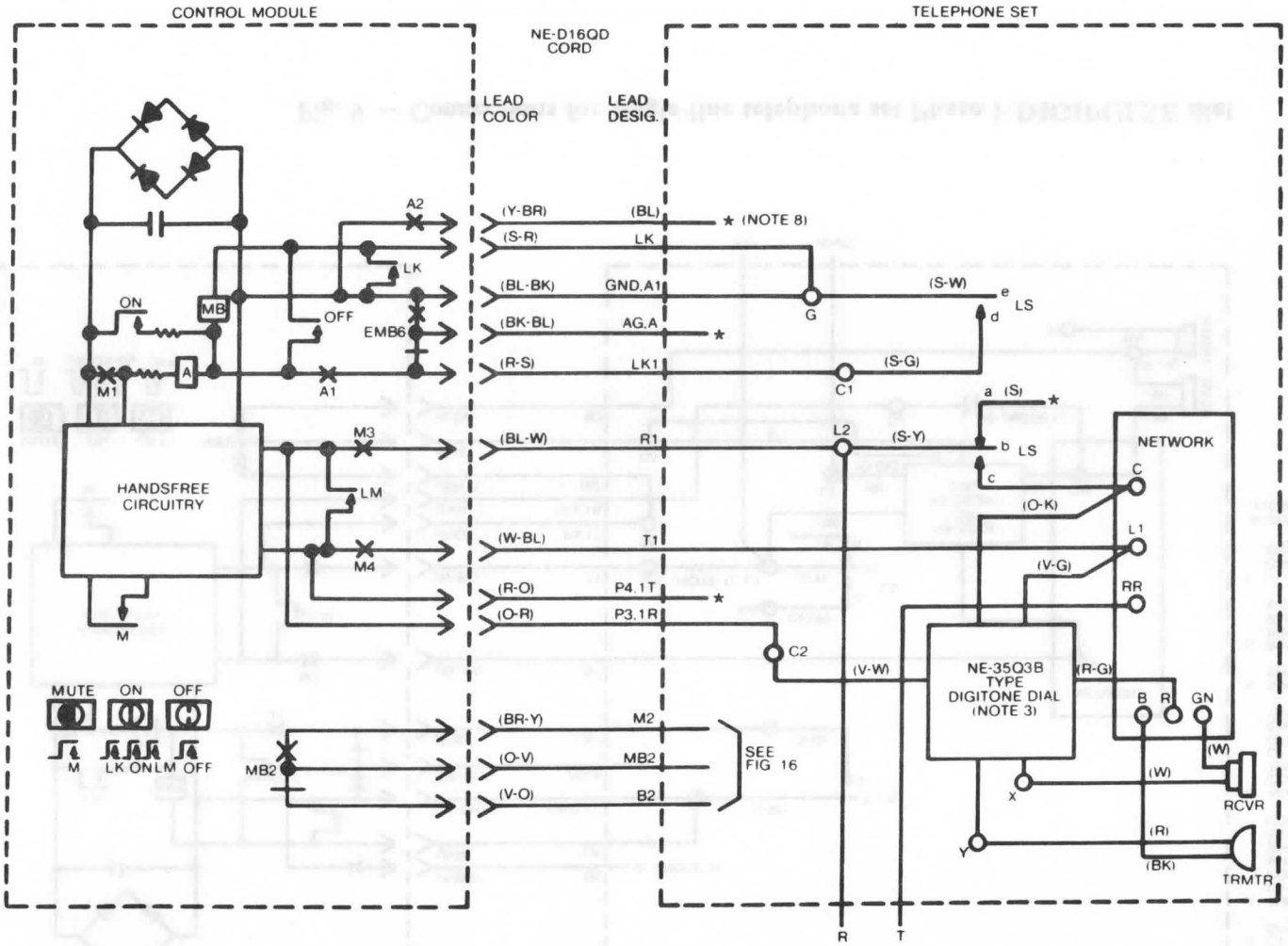

NOTES

1 THE (S-G) LEAD FROM THE LINE SWITCH LS IS CONNECTED TO THE LK1 LEAD FOR THE DUAL PURPOSE OF AUTOMATICALLY CUTTING OFF THE CONFERENCE 2000 UNIT WHEN TRANSFERRING TO THE HANDSET AND OF PROVIDING THE "A" LEAD CONTROL

2 WHEN "A" LEAD CONTROL IS REQUIRED CONNECT THE A AND A1 LEADS OF THE SYSTEM TO THE A AND A1 LEADS OF THE CONTROL MODULE BY MEANS OF A SPARE TERMINAL OR CONNECTOR ENSURE THAT d-e RELEASES LATER THAN b-c IN THE LINE SWITCH

3 THE NE-35Q3B NE-35Q3B1 OR NE-35Q3B2 DIGITONE DIAL IS RECOMMENDED FOR ON-HOOK DIALING. THERE IS NO NEED TO CONVERT TO THIS DIAL IF ON-HOOK DIALING IS NOT REQUIRED OR IF THE TELEPHONE SET IS EQUIPPED FOR ON-HOOK DIALING WITH NE-25B3 NE-25B3QA NE-25Y3 OR NE-35B3 TYPE DIALS

4 FOR OTHER THAN NORTHERN TELECOM TELEPHONE SETS PUSHBUTTON DIALS EQUIVALENT TO NE-25B TYPE NE-35B3 TYPE OR NE-35Q3B TYPE MUST BE USED IN ORDER TO ACHIEVE ON-HOOK DIALING

5 C1 C2 ETC ARE DESIGNATIONS FOR SPARE TERMINALS OR CONNECTORS

6 RINGER CONNECTIONS ARE NOT SHOWN

7 REFER TO THE APPROPRIATE TELEPHONE DIAGRAM WHEN REWIRING IS REQUIRED IN INSTALLATION OR REMOVAL OF THE CONFERENCE 2000

8 IF A BUSY LAMP (INDICATING USE OF CONFERENCE 2000) IS REQUIRED REFER TO FIG 17

★ INSULATE AND STORE

Fig. 8 — Connections for single-line telephone set DIGITONE dial

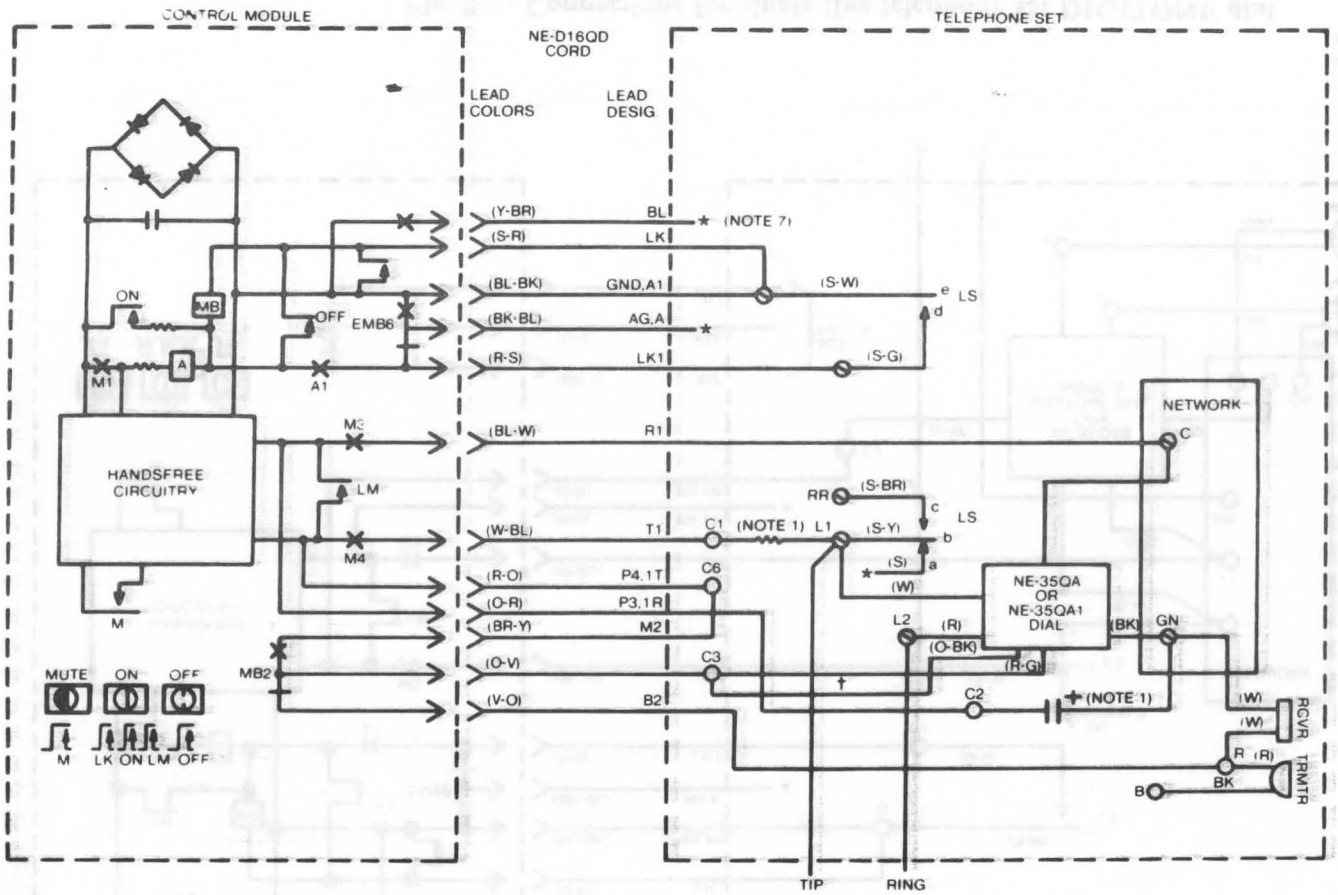

NOTES:

1. KIT PO565022, CONSISTING OF A RESISTOR AND A CAPACITOR, MUST BE ORDERED AND INSTALLED TO PROVIDE MUTING.
2. C1, C2, ETC., ARE DESIGNATIONS FOR SPARE TERMINALS OR CONNECTIONS.
3. THE (S-G) LEAD FROM THE LINE SWITCH LS IS CONNECTED TO THE LK1 LEAD FOR THE DUAL PURPOSE OF AUTOMATICALLY CUTTING OFF THE UNIT WHEN TRANSFERRING TO THE HANDSET AND OF PROVIDING THE "A" LEAD CONTROL.
4. WHEN "A" LEAD CONTROL IS REQUIRED CONNECT THE A AND A1 LEADS OF THE SYSTEM TO THE A AND A1 LEADS OF THE CONTROL MODULE BY MEANS OF A SPARE TERMINAL OR CONNECTOR. ENSURE THAT d-e RELEASES LATER THAN b-c IN THE LINE SWITCH.
5. RINGER CONNECTIONS ARE NOT SHOWN.
6. REFER TO THE APPROPRIATE TELEPHONE DIAGRAM WHEN REWIRING IS REQUIRED IN INSTALLATION OR REMOVAL OF THE CONFERENCE 2000.
7. IF A BUSY LAMP (INDICATING USE OF CONFERENCE 2000) IS REQUIRED, REFER TO FIG. 17.

★ INSULATE AND STORE.
† (O-BK) LEAD ON NE-35QA DIAL ONLY.

Fig. 9 — Connections for single-line telephone set Phase 1 DIGIPULSE dial

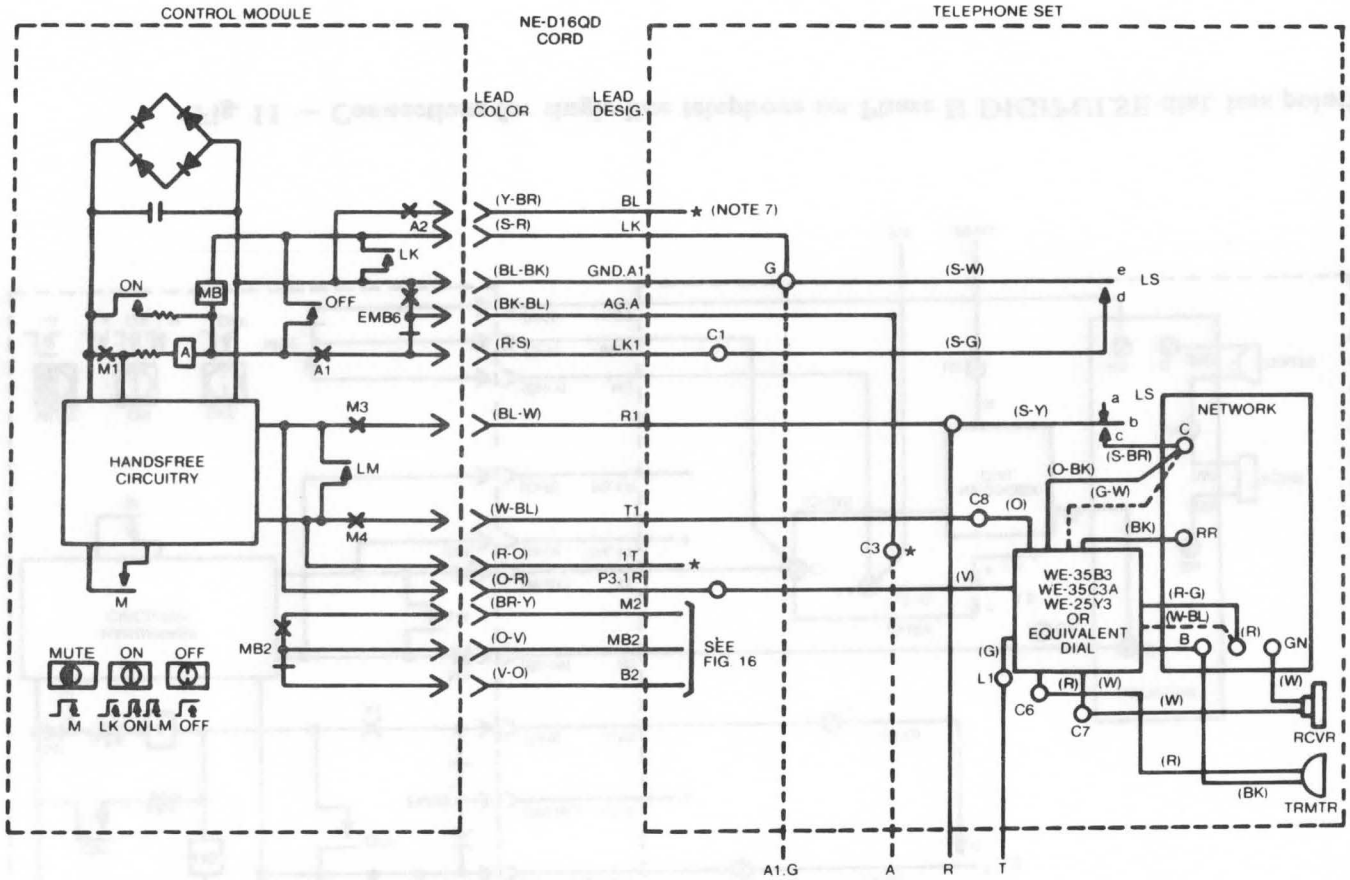

NOTES

1. 1. THE (S-G) LEAD FROM THE LINE SWITCH LS IS CONNECTED TO THE LK1 LEAD FOR AUTOMATIC CUTOFF OF THE UNIT WHEN TRANSFERRING RING TO THE HANDSET
2. THE AG LEAD IS CONNECTED ONLY WHEN REQUIRED AS IN THE NE-1A1, NE-1A2 OR EQUIVALENT KEY TELEPHONE SYSTEMS.
3. THIS ILLUSTRATES THE USE OF THE WE-35B3, WE-35C3A, WE-25Y3, OR OTHER EQUIVALENT PUSHBUTTON DIAL FOR ON-HOOK DIALING. THE WE-35C3A, WE-25Y3 OR EQUIVALENT TYPES HAVE TWO ADDITONAL LEADS SHOWN IN DOTTED LINES
4. C1, C2 ETC. ARE DESIGNATIONS FOR SPARE TERMINALS OR CONNECTORS
5. RINGER OR CONNECTIONS ARE NOT SHOWN
6. REFER TO THE APPROPRIATE TELEPHONE DIAGRAM WHEN REWIRING IS REQUIRED IN INSTALLATION OR REMOVAL OF THE CONFERENCE 2000
7. IF A BUSY LAMP (INDICATING USE OF CONFERENCE 2000) IS REQUIRED REFER TO FIG 17

★ INSULATE AND STORE

Fig. 10— Connections for W.E. Co. single-line telephone set DIGITONE dial, or equivalent ⊡

⊡ Not required by Bell Canada

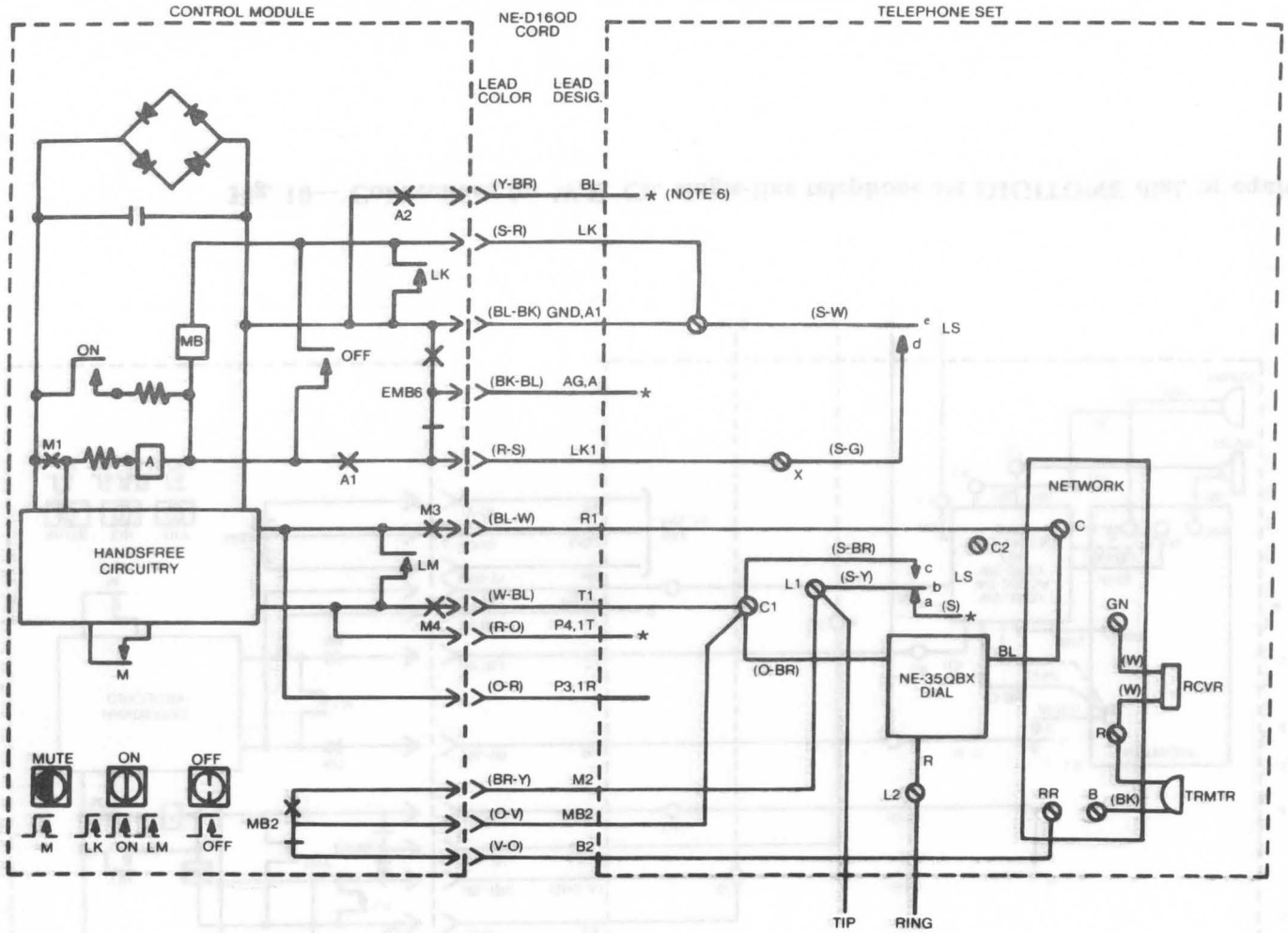

NOTES:

1. C1, C2, ETC., ARE DESIGNATIONS FOR SPARE TERMINALS OR CONNECTIONS.
2. THE S-G LEAD FROM THE LINE SWITCH LS IS CONNECTED TO THE LK1 LEAD FOR THE DUAL PURPOSE OF AUTOMATICALLY CUTTING OFF THE UNIT WHEN TRANSFERRING TO THE HANDSET AND OF PROVIDING THE "A" LEAD CONTROL.
3. WHEN "A" LEAD CONTROL IS REQUIRED CONNECT THE A AND A1 LEADS OF THE SYSTEM TO THE A AND A1 LEADS OF THE CONTROL MODULE BY MEANS OF A SPARE TERMINAL OR CONNECTOR. ENSURE THAT d-e RELEASES LATER THAN b-c IN THE LINE SWITCH.
4. RINGER CONNECTIONS ARE NOT SHOWN.
5. REFER TO THE APPROPRIATE TELEPHONE DIAGRAM WHEN REWIRING IS REQUIRED IN INSTALLATION OR REMOVAL OF THE CONFERENCE 2000.
6. IF A BUSY LAMP (INDICATING USE OF CONFERENCE 2000) IS REQUIRED, REFER TO FIG. 17.

★ INSULATE AND STORE.

Fig. 11 — Connections for single-line telephone set Phase II DIGIPULSE dial, less polarity guard

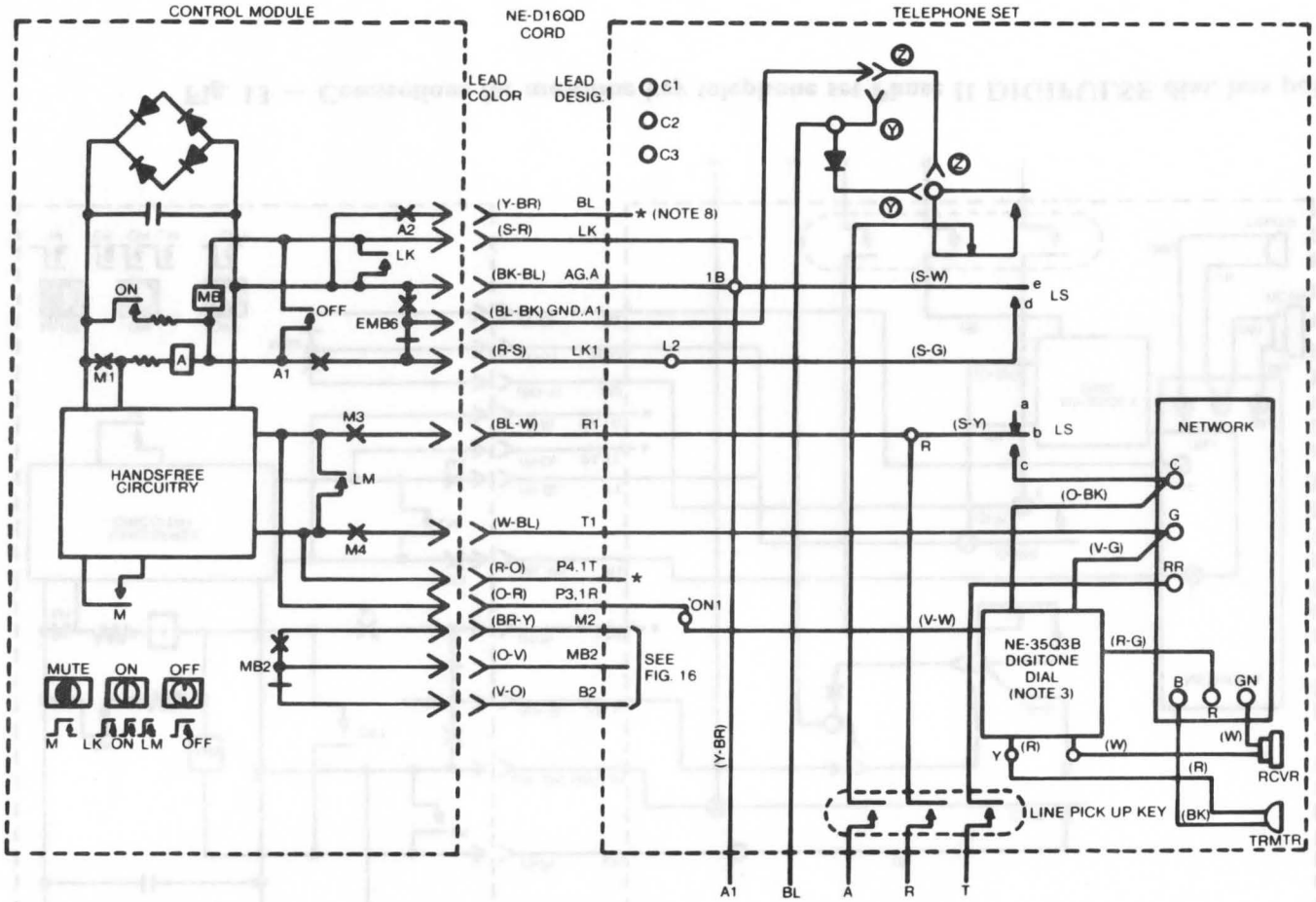

NOTES

1. THE (S-G) LEAD FROM THE LINE SWITCH LS IS CONNECTED TO THE LK1 LEAD FOR AUTOMATIC CUTOFF OF THE CONFERENCE 2000 UNIT WHEN TRANSFERRING TO THE HANDSET
2. THE AG LEAD IS CONNECTED (THROUGH A DIODE IN THE CASE OF STATION BUSY LAMP IN THE NE-1A1 OR -1A2 KTS) TO THE "A" LEAD OF THE SYSTEM
3. THE NE-35Q3B, NE-35Q3B1 OR NE-35Q3B2 DIGITONE DIAL IS RECOMMENDED FOR ON-HOOK DIALING. THERE IS NO NEED TO CONVERT TO THIS DIAL IF ON-HOOK DIALING IS NOT REQUIRED OR IF THE TELEPHONE SET IS EQUIPPED FOR ON-HOOK DIALING WITH NE-25B3, NE-25B3QA, NE-25Y3, NE-35B3 OR NE-35Q3J DIALS. THE NE-35Q3J HAS TWO EXTRA LEADS
4. IN SOME TELEPHONE SETS THE BUSY LAMP BL LEAD MAY BE PERMANENTLY WIRED TO TERMINAL L2. USE A SPARE TERMINAL OR QCM12A CONNECTOR TO CONNECT (S-G) LINE SWITCH LEAD TO (R-S) LK1 LEAD
5. C1, C2, ETC. ARE DESIGNATIONS FOR SPARE TERMINALS OR CONNECTORS
6. RINGER CONNECTIONS ARE NOT SHOWN
7. REFER TO THE APPROPRIATE TELEPHONE DIAGRAM WHEN REWIRING IS REQUIRED IN INSTALLATION OR REMOVAL OF THE CONFERENCE 2000
8. IF A BUSY LAMP (INDICATING USE OF CONFERENCE 2000) IS REQUIRED, REFER TO FIG. 17

OPTIONS

Z FACTORY WIRED FOR NE-1A1 OR 1A2 WITHOUT STATION BUSY LAMP

Y, DIODE AND BL LEAD REWIRED FOR STATION BUSY LAMP

Fig. 12 — Connections for multiline key telephone set DIGITONE dial

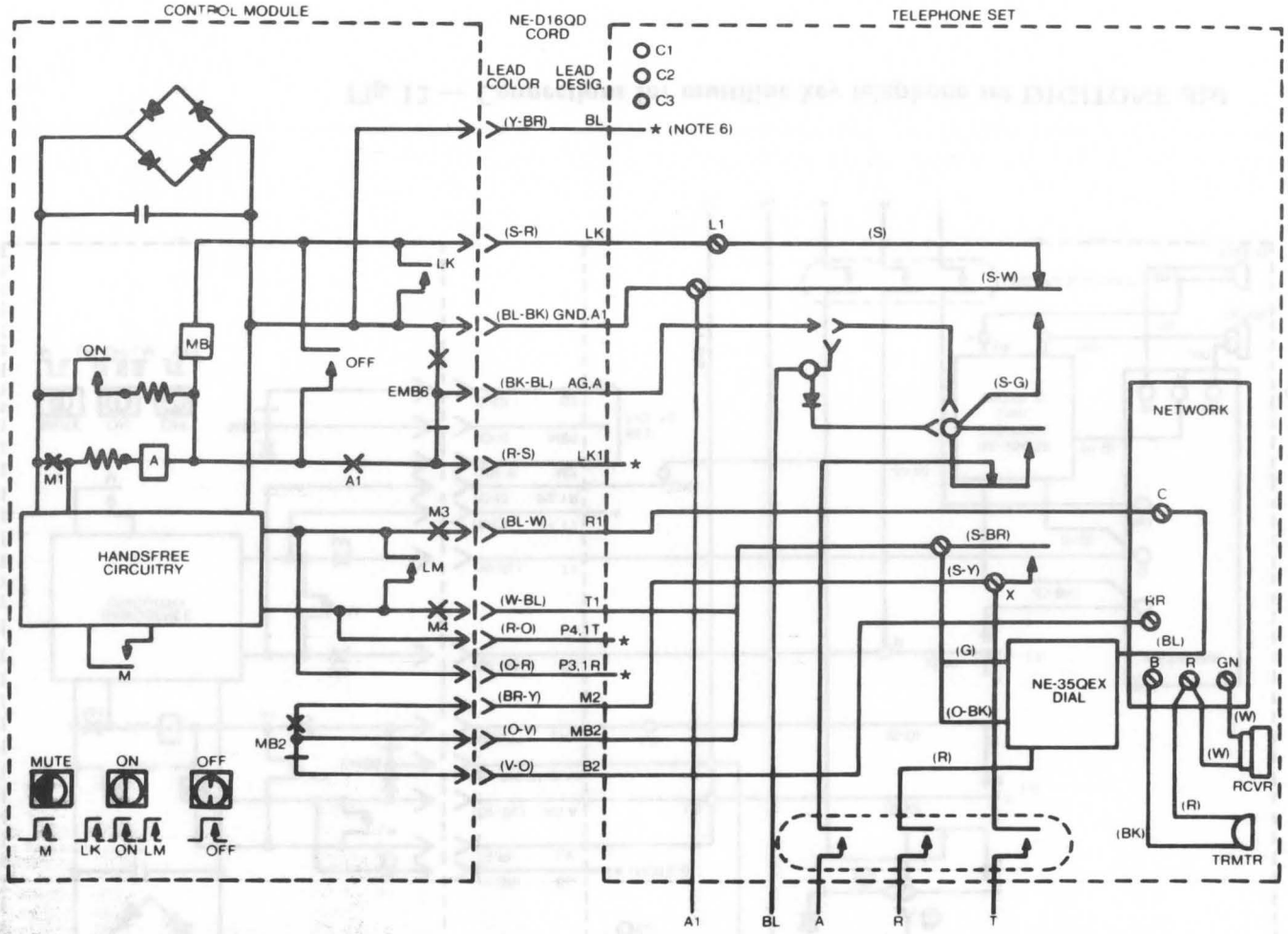

NOTES:

1. THE (S-G) LEAD FROM THE LINE SWITCH LS IS CONNECTED TO THE LK1 LEAD FOR AUTOMATIC CUTOFF OF THE CONFERENCE 2000 UNIT WHEN TRANSFERRING TO THE HANDSET.
2. THE AG LEAD IS CONNECTED (THROUGH A DIODE IN THE CASE OF STATION BUSY LAMP IN THE NE-1A1 OR -1A2 KTS) TO THE "A" LEAD OF THE SYSTEM.
3. C1, C2, ETC., ARE DESIGNATIONS FOR SPARE TERMINALS OR CONNECTORS.
4. RINGER CONNECTIONS ARE NOT SHOWN.
5. REFER TO THE APPROPRIATE TELEPHONE DIAGRAM WHEN REWIRING IS REQUIRED IN INSTALLATION OR REMOVAL OF THE CONFERENCE 2000.
6. IF A BUSY LAMP (INDICATING USE OF CONFERENCE 2000) IS REQUIRED, REFER TO FIG. 17.

★ INSULATE AND STORE.

OPTIONS:

Z FACTORY WIRED FOR NE-1A1 OR 1A2 WITHOUT STATION BUSY LAMP.

IN DIAGRAM THE RING OR PICK-UP LEAD IS DISCONNECTED FROM R TERMINAL AND CONNECTED TO R LEAD OF DIAL.

ALSO DISCONNECT THE TIP PICK-UP KEY FROM X TERMINAL AND CONNECT TO L2.

Fig. 13 — Connections for multiline key telephone set Phase II DIGIPULSE dial, less polarity guard

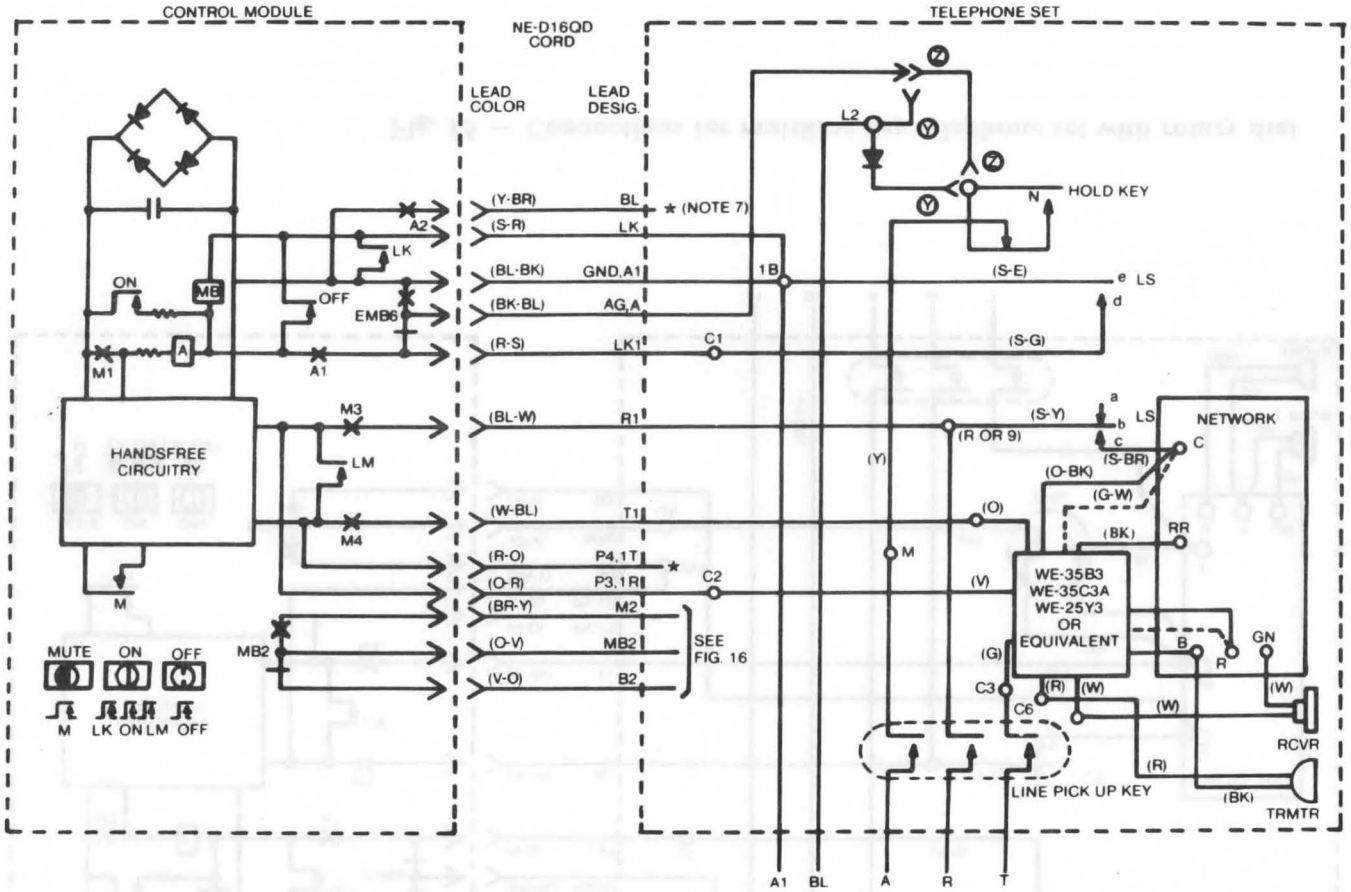

NOTES:

1. THE (S-G) LEAD FROM THE LINE SWITCH LS IS CONNECTED TO THE LK1 LEAD FOR AUTOMATIC CUTOFF OF THE CONFERENCE 2000 UNIT WHEN TRANSFERRING TO THE HANDSET
2. THE AG LEAD IS CONNECTED (THROUGH A DIODE IN THE CASE OF STATION BUSY LAMP IN THE NE-1A1 OR -1A2 KTS) TO THE A LEAD OF THE SYSTEM
3. THIS ILLUSTRATES THE USE OF THE WE-35B3, WE-35C3A, WE-25Y3, OR OTHER EQUIVALENT PUSHBUTTON DIAL FOR ON-HOOK DIALING. THE WE-35C3A, WE-25Y3 OR EQUIVALENT TYPES HAVE TWO ADDITONAL LEADS SHOWN IN DOTTED LINES.
4. C1, C2, ETC. ARE DESIGNATIONS FOR SPARE TERMINALS OR CONNECTORS
5. RINGER OR CONNECTIONS ARE NOT SHOWN
6. REFER TO THE APPROPRIATE TELEPHONE DIAGRAM WHEN REWIRING IS REQUIRED IN INSTALLATION OR REMOVAL OF THE CONFERENCE 2000
7. IF A BUSY LAMP (INDICATING USE OF CONFERENCE 2000) IS REQUIRED REFER TO FIG. 17

★ INSULATE AND STORE

OPTIONS

Z FACTORY WIRED FOR K-1A1, K-1A2 NE-1A1 OR NE-1A2 WITHOUT STATION BUSY LAMP

Y DIODE AND BL LEAD REWIRED FOR STATION BUSY LAMP

Fig. 14 — Connections for W.E. Co. multiline key telephone set with pushbutton dial equipped for on-hook dialing ⊡

⊡ Not required by Bell Canada

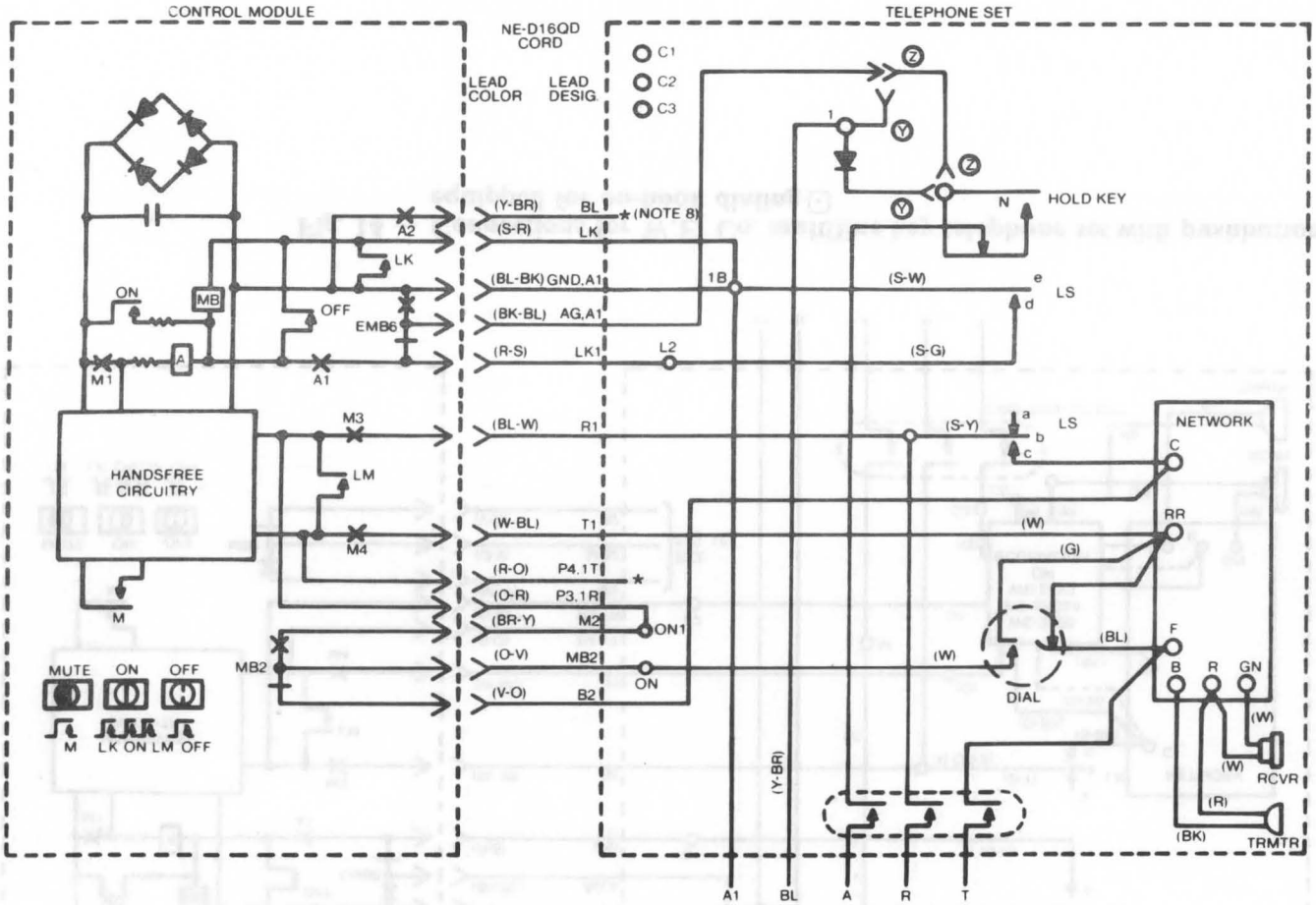

NOTES

1 THE (S-G) LEAD FROM THE LINE SWITCH LS IS CONNECTED TO THE LK1 LEAD FOR AUTOMATIC CUTOFF OF THE CONFERENCE 2000 UNIT WHEN TRANSFERRING TO THE HANDSET

2 THE AG LEAD IS CONNECTED (THROUGH A DIODE IN THE CASE OF STATION BUSY LAMP IN THE NE-1A1 OR -1A2 KTS) TO THE A LEAD OF THE SYSTEM

3 THE OFF-NORMAL (W) LEADS OF THE DIAL ARE REWIRED TO SERVE BOTH OFF-HOOK AND ON-HOOK DIALING

4 IN SOME TELEPHONE SETS THE BUSY LAMP BL LEAD MAY BE PERMANENTLY WIRED TO TERMINAL L2 USE A SPARE TERMINAL OR QCM12A CONNECTOR TO CONNECT (S-G) LINE SWITCH LEAD TO (R-S) LK1 LEAD

5 C1 C2 ETC ARE DESIGNATIONS FOR SPARE TERMINAL OR CONNECTORS

6 RINGER CONNECTIONS ARE NOT SHOWN

7 REFER TO THE APPROPRIATE TELEPHONE DIAGRAM WHEN REWIRING IS REQUIRED IN INSTALLATION OF REMOVAL OF THE CONFERENCE 2000

8 IF A BUSY LAMP (INDICATING USE OF CONFERENCE 2000) IS REQUIRED REFER TO FIG 17

★ INSULATE AND STORE

OPTIONS

Z FACTORY WIRED FOR NE-1A1 OR 1A2 WITHOUT STATION BUSY LAMP

Y DIODE AND BL LEAD REWIRED FOR STATION BUSY LAMP

Fig. 15 — Connections for multiline key telephone set with rotary dial

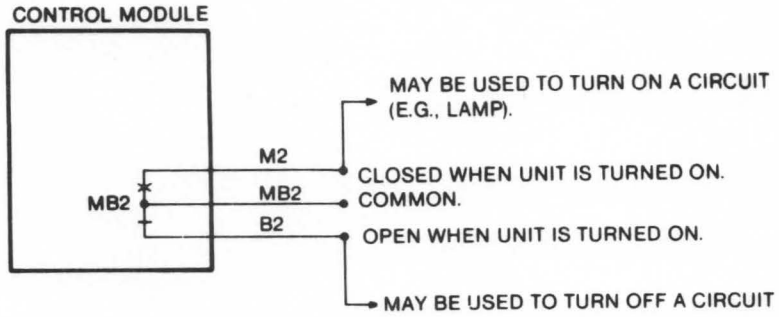

Fig. 16 — Connections for auxiliary transfer contacts

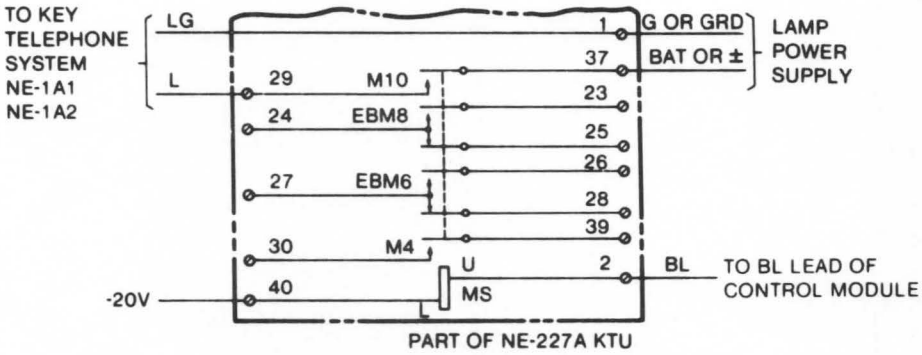

Fig. 17 — Connections for external station busy lamp or relay control