MULTIBUTTON TELEPHONES

TCI Library: www.telephonecollectors.info

3-LINE, ROTARY DIAL, DESK TELEPHONES
GENERAL DESCRIPTION - SECTION 50-576-100, ISSUE 1
REPLACEMENT PARTS - SECTION 50-576-101, ISSUE 2
CIRCUIT LABELS - SECTION 50-576-102, ISSUE 3

3-LINE, PUSHBUTTON DIAL, DESK TELEPHONES
GENERAL DESCRIPTION - SECTION 50-576-103, ISSUE 2
REPLACEMENT PARTS - SECTION 50-576-104, ISSUE 2
CIRCUIT LABELS - SECTION 50-576-105, ISSUE 3

6-BUTTON, ROTARY DIAL, KEY TELEPHONES
GENERAL DESCRIPTION - SECTION 50-565-100, ISSUE 1
REPLACEMENT PARTS - SECTION 50-565-101, ISSUE 2
CIRCUIT LABELS - SECTION 50-565-102, ISSUE 3

6-BUTTON, PUSHBUTTON DIAL, KEY TELEPHONES
GENERAL DESCRIPTION - SECTION 50-565-103, ISSUE 1
REPLACEMENT PARTS - SECTION 50-565-104, ISSUE 2
CIRCUIT LABELS - SECTION 50-565-105, ISSUE 2

10-BUTTON, ROTARY DIAL, DESK TELEPHONES
GENERAL DESCRIPTION - SECTION 50-830-100, ISSUE 1
REPLACEMENT PARTS - SECTION 50-830-101, ISSUE 2
CIRCUIT LABELS - SECTION 50-830-102, ISSUE 2

10-BUTTON, PUSHBUTTON DIAL, DESK TELEPHONES
GENERAL DESCRIPTION - SECTION 50-830-103, ISSUE 1
REPLACEMENT PARTS - SECTION 50-830-104, ISSUE 2
CIRCUIT LABELS - SECTION 50-830-105, ISSUE 2

20-BUTTON, ROTARY DIAL, DESK TELEPHONES
GENERAL DESCRIPTION - SECTION 50-831-100, ISSUE 1
REPLACEMENT PARTS - SECTION 50-831-101, ISSUE 2
CIRCUIT LABELS - SECTION 50-831-102, ISSUE 2

20-BUTTON, PUSHBUTTON DIAL, DESK TELEPHONES
GENERAL DESCRIPTION - SECTION 50-831-103, ISSUE 1
REPLACEMENT PARTS - SECTION 50-831-104, ISSUE 2
CIRCUIT LABELS - SECTION 50-831-105, ISSUE 2

10-BUTTON, ROTARY DIAL, DESK TELEPHONES WITH BUSY LAMP FIELD
GENERAL DESCRIPTION - SECTION 50-835-100, ISSUE 1
REPLACEMENT PARTS - SECTION 50-835-101, ISSUE 2
CIRCUIT LABELS - SECTION 50-835-102, ISSUE 2

10-BUTTON, PUSHBUTTON DIAL, DESK TELEPHONES WITH BUSY LAMP FIELD
GENERAL DESCRIPTION - SECTION 50-835-103, ISSUE 1
REPLACEMENT PARTS - SECTION 50-835-104, ISSUE 2
CIRCUIT LABELS - SECTION 50-835-105, ISSUE 2

10-BUTTON, ROTARY DIAL, WALL TELEPHONES
GENERAL DESCRIPTION - SECTION 50-854-100, ISSUE 1
REPLACEMENT PARTS - SECTION 50-854-101, ISSUE 2
CIRCUIT LABELS - SECTION 50-854-102, ISSUE 2

10-BUTTON, PUSHBUTTON DIAL, WALL TELEPHONES
GENERAL DESCRIPTION - SECTION 50-854-103, ISSUE 1
REPLACEMENT PARTS - SECTION 50-854-104, ISSUE 2
CIRCUIT LABELS - SECTION 50-854-105, ISSUE 2

30-BUTTON, ROTARY DIAL, DESK TELEPHONES
GENERAL DESCRIPTION - SECTION 50-861-100, ISSUE 1
REPLACEMENT PARTS - SECTION 50-861-101, ISSUE 2
CIRCUIT LABELS - SECTION 50-861-102, ISSUE 2

30-BUTTON, PUSHBUTTON DIAL, DESK TELEPHONES
GENERAL DESCRIPTION - SECTION 50-861-103, ISSUE 1
REPLACEMENT PARTS - SECTION 50-861-104, ISSUE 2
CIRCUIT LABELS - SECTION 50-861-105, ISSUE 2

10-BUTTON, ROTARY DIAL, DESK TELEPHONES WITH BUILT-IN CALL ANNOUNCER
GENERAL DESCRIPTION - SECTION 50-870-100, ISSUE 1
REPLACEMENT PARTS - SECTION 50-870-101, ISSUE 2
CIRCUIT LABELS - SECTION 50-870-102, ISSUE 2

10-BUTTON, PUSHBUTTON DIAL, DESK TELEPHONES WITH BUILT-IN CALL ANNOUNCER
GENERAL DESCRIPTION - SECTION 50-870-103, ISSUE 1
REPLACEMENT PARTS - SECTION 50-870-104, ISSUE 2
CIRCUIT LABELS - SECTION 50-870-105, ISSUE 2

20-BUTTON, ROTARY DIAL, DESK TELEPHONES WITH BUILT-IN CALL ANNOUNCER
GENERAL DESCRIPTION - SECTION 50-871-100, ISSUE 1
REPLACEMENT PARTS - SECTION 50-871-101, ISSUE 2
CIRCUIT LABELS - SECTION 50-871-102, ISSUE 2

20-BUTTON, PUSHBUTTON DIAL, DESK TELEPHONES WITH BUILT-IN CALL ANNOUNCER
GENERAL DESCRIPTION - SECTION 50-871-103, ISSUE 1
REPLACEMENT PARTS - SECTION 50-871-104, ISSUE 2
CIRCUIT LABELS - SECTION 50-871-105, ISSUE 2

TCI Library: www.telephonecollectors.info

6-BUTTON, ROTARY DIAL, KEY TELEPHONES

GENERAL DESCRIPTION

CONTENTS PAGE

1. GENERAL DESCRIPTION 1
MODEL 564**( ) 40 3
MODEL 564**( ) 41 3
MODEL 565**( ) 40 3
MODEL 565**( ) 41 3
MODEL 565**( ) 42 3
MODEL 566**( ) 40 3
MODEL 566**( ) 41 4
MODEL 567**( ) 40 4
MODEL 567**( ) 41 4
MODEL 567**( ) 42 4
2. INSTALLATION 4
3. MAINTENANCE 4
4. PUSHBUTTON KEY CONVERSIONS . 4
5. BUZZER INSTALLATION 4
6. BIASED RINGER WIRING 7
7. BUSY LAMP CONNECTIONS 8
8. CONNECT 174B CALL ANNOUNCER TO 6-BUTTON TELEPHONES 9

1. GENERAL DESCRIPTION

1.01 This document covers the 6-button, rotary dial, key telephone. (See Figure 1.) A general description as well as information that is peculiar to 6-button, rotary dial, key telephones is included.

1.02 This section supersedes all previous documents covering a general description of 6-button, rotary dial, key telephones. For additional information, refer to Section 50-565-101, Replacement Parts and to Section 50-565-102, Circuit Labels. For information on installation, maintenance, and components or equipment, consult related documents of the ITT Telephone Apparatus Practices Manual.

AW 82-356
Figure 1: 6-Button, Rotary Dial, Key Telephone

1.03 The Models 564/565, 566/567 key telephones are 6-button, rotary dial, anti-sidetone type units that operate efficiently over a wide range of loop resistances and line impedances. They are designed to be used with key telephone systems such as the ITT 1A2 System where several telephones have access to the same lines, CO trunks, or intercom lines.

1.04 The Models 564/565, 566/567 key telephones are identified by a code number stamped in ink on the bottom of the base plate. Refer to ordering information in Table A for an explanation of each code number. The Model 564 type 40 telephone is the standard 6-button, rotary dial, desk type, key telephone. The Model 565 type 40 telephone is similar to the Model 564 type 40 with the addition of an exclusion switch. The Model 566 type 40 telephone is similar to the Model 564 type 40 with the addition of the hookswitch restoration feature. The Model 567 type 40 telephone is similar to the Model 565 type 40 with the addition of the hookswitch restoration feature. A description of

TCI Library: www.telephonecollectors.info

TABLE A

ORDERING INFORMATION - TELEPHONES

CODE NUMBERS

TELEPHONE CODE NUMBERS ARE FORMED IN SIX STEPS AS FOLLOWS:

565 15 O BA 40 M

(1) Type of Instrument (See Part 1)
(2) Color (See Part 2)
(3) Version (See Part 3)
(4) Ringer (See Part 4)
(5) Special Feature (See Part 5)
(6) Dial (See Part 6)

PART 1 TYPE OF INSTRUMENT

CODE	DESCRIPTION	COLOR OFFERED	VERSION OFFERED	RINGER OFFERED	FEATURE OFFERED	DIAL OFFERED
564	6-Button Rotary Dial	00, 05, 09, 13, 15, 44, and 45 (Available On All Models)	O	BA, LR	40, 41	M, R
565	6-Button Rotary Dial W/Exclusion		O	BA, LR	40, 41, 42	M, R
566	6-Button Rotary Dial W/Hookswitch Restoration		O	BA, LR	40, 41	M, R
567	6-Button Rotary Dial W/Exclusion & Hookswitch Restoration		O	BA, LR	40, 41, 42	M, R

REFER TO INDIVIDUAL UNIT DESCRIPTION FOR COMPLETE DESCRIPTION OF FEATURE COMBINATIONS

PART 2 COLORS		PART 3 VERSIONS		PART 4 RINGERS		PART 5 SPECIAL FEATURES		PART 6 DIALS	
CODE	COLORS	CODE	VERSIONS	CODE	RINGERS	CODE	SPECIAL FEATURES	CODE	DIAL
00	Black	O	Conventional	LR	Less Ringer	40	No Special Features	M	Metropolitan (Letters & Numerals)
05	Moss Green								
09	Ivory			BA	Straight Line	41	40 Combined with Push-button for Grounding	R	Regular (Numerals Only)
13	Beige								
15	White					42	40 Combined with "Handsfree" Operation		
44	Light Ash								
45	Cocoa Brown								

AW 81-91

TCI Library: www.telephonecollectors.info

these telephones and the features available on each is given in the following paragraphs. All models are equipped with a mounting cord terminated in an Amphenol-type plug.

1.05 Five pushbutton keys on the telephone are used for line, trunk, or intercom selection. The red key on the far left is a hold key and allows any selected line or trunk to be placed in a hold position. All remaining keys may be used as line keys. The two keys on the right may be wired as either intercom lines or signal keys.

1.06 A signal lamp beneath each of the five line keys indicates status of the associated line. (See Table B.)

TABLE B

LINE KEY SIGNALS

CONDITION	LAMP INDICATION
Idle	Lamp extinguished
Busy	Lamp Lit
Hold	Lamp Winking
Call Incoming	Lamp Flashing

AW 81-96

1.07 Variations in Models 564/565, 566/567 are briefly described below. Circuit label drawings for these models are shown in Section 50-565-102.

MODEL 564( ) 40**

1.08 The Model 564**( ) 40 is a standard 6-button, rotary dial, desk type, key telephone that can be modified to accept various features. It is equipped with a 34-conductor mounting cord fitted with a 50-pin (25-pair) male connector.

MODEL 564( ) 41**

1.09 The Model 564**( ) 41 is identical to the Model 564**( ) 40 with the addition of a grounding pushbutton switch, required in some PABX applications for transferring calls, originating calls during a power failure, and other special functions.

MODEL 565( ) 40**

1.10 The Model 565**( ) 40 is a standard 6-button, rotary dial, desk type, key telephone that can be modified to accept various features. It is equipped with a manual exclusion switch in the left-hand cradle plunger. Lifting the plunger disconnects any other telephone on one of the lines for confidential conversations. This model is equipped with a 42-conductor mounting cord fitted with a 50-pin (25-pair) male connector.

MODEL 565( ) 41**

1.11 The Model 565**( ) 41 is identical to the Model 565**( ) 40 with the addition of a grounding pushbutton switch, required in some PABX applications for transferring calls, originating calls during a power failure, and other special functions.

MODEL 565( ) 42**

1.12 The Model 565**( ) 42 provides for the addition of an external handsfree speaker arrangement. It includes an additional set of contacts in the dial to disconnect the handsfree speaker during dialing and an additional set of contacts in the hookswitch assembly for on/off control of the handsfree equipment. This model is also equipped with an exclusion plunger but does not have an exclusion switch. The number 79971 exclusion switch can be added. The Model 565**( ) 42 is equipped with a 50-conductor mounting cord fitted with a 50-pin (25-pair) male connector.

MODEL 566( ) 40**

1.13 The Model 566**( ) 40 is the same as the Model 564**( ) 40 with the addition of a hookswitch restoration feature. This hookswitch restoration feature will release any operated line key when the cradle plunger is pressed. Therefore, a method other than flashing the hookswitch must be used to signal the operator. An operator recall button containing normally closed contacts is installed for this purpose. This operator recall button (located just forward of the handset cradle) is also used to obtain dial tone when momentarily pressed.

TCI Library: www.telephonecollectors.info

MODEL 566( ) 41**

1.14 The Model 566**( ) 41 is the same as the Model 566**( ) 40 with the addition of a grounding pushbutton switch, required in some PABX applications for transferring calls, originating calls during a power failure, and other special functions.

MODEL 567( ) 40**

1.15 The Model 567**( ) 40 is the same as the Model 565**( ) 40 with the addition of a hookswitch restoration feature. This hookswitch restoration feature will release any operated line key when the cradle plunger is pressed. Therefore, a method other than flashing the hookswitch must be used to signal the operator. An operator recall button containing normally closed contacts is installed for this purpose. This operator recall button (located just forward of the handset cradle) is also used to obtain dial tone when momentarily pressed.

MODEL 567( ) 41**

1.16 The Model 567**( ) 41 is the same as the Model 567**( ) 40 with the addition of a grounding pushbutton switch, required in some PABX applications for transferring calls, originating calls during a power failure, and other special functions.

MODEL 567( ) 42**

1.17 The Model 567**( ) 42 is the same as the Model 565**( ) 42 with the addition of a hookswitch restoration feature that restores any operated line button when the hookswitch is pressed. An operator recall button is provided for operator signaling as in the Model 567**( ) 40.

2. INSTALLATION

2.01 Since these telephones are equipped with a plug-terminated mounting cord, installation consists of inserting the plug into the station connecting block and pressing to engage. For specific wiring installation information, refer to the appropriate circuit label in Section 50-565-102 and to Table C of this document. For general installation information and installation of repair parts, refer to the particular section of the ITT Telephone Apparatus Practices Manual for the required part.

3. MAINTENANCE

3.01 For general maintenance information, refer to the general maintenance section of the ITT Telephone Apparatus Practices Manual. For a pictorial view and parts list, refer to Section 50-565-101.

4. PUSHBUTTON KEY CONVERSIONS

4.01 Pushbutton keys 4 and 5 (from the left) may be converted from line to signaling keys by turning the slot-headed pin about six revolutions CCW from the plunger, then changing key leads as shown in Table D. Table D also shows wiring for intercom using line key number 5 as a common signaling key.

5. BUZZER INSTALLATION

5.01 When a key is converted to signaling mode, a buzzer may be installed as the signaling device of the telephone to be signaled. The buzzer may be installed on the dial mounting bracket inside the telephone or mounted externally. Buzzer installation for signaling between two telephones (using buzzers operating at 18 VAC, 60 Hz) should be as follows. (Refer to Figure 2.)

(a) Connect the signal buzzer leads to terminal 3 and terminal 4 of the telephone terminal board. (Do this for each telephone to be signaled.)

(b) Move the BN-BK lead from terminal X to terminal SG of the telephone terminal board. (This is for each telephone that will be initiating a signal.)

(c) Cross-connect from the YL-OR lead at the station block of the signaled telephone to the BK-BN lead at the station block of the signaling telephone.

(d) Cross-connect from the BK-BN lead at the station block of the signaled telephone to the YL-OR lead at the station block of the signaling telephone.

(e) Cross-connect from the power supply and ground to the OR-YL lead and BN-YL lead respectively at the station block for each telephone.

5.02 A buzzer may also be installed to replace a ringer. This can be accomplished in the following manner. Refer to the circuit diagram in Figure 3.

TCI Library: www.telephonecollectors.info

TABLE C

CONNECTION CHART FOR 564 AND 565 TELEPHONE SETS

CIRCUIT FEATURE		TERMINAL IN SET	MOUNTING CORDS			CONNECTOR PIN NUMBER	CONNECTING CABLE
			50-Cond.	42-Cond.	34-Cond.		
LINE	LEAD DESIG.	636 KEY	565/42 PHONES	565/40 PHONES	564/40 PHONES	AMPHENOL CONNECTOR	50-Cond.
1	T	1T	WH-BL	WH-BL	WH-BL	26	WH-BL
	R	1R	BL-WH	BL-WH	BL-WH	1	BL-WH
	A	1H	WH-OR	WH-OR	WH-OR	27	WH-OR
	A1	1B	OR-WH	OR-WH	OR-WH	2	OR-WH
	LG	LG	WH-GN	WH-GN	WH-GN	28	WH-GN
	L	L1	GN-WH	GN-WH	GN-WH	3	GN-WH
2	T	2T	WH-BN	WH-BN	WH-BN	29	WH-BN
	R	2R	BN-WH	BN-WH	BN-WH	4	BN-WH
	A	2H	WH-SL	WH-SL	WH-SL	30	WH-SL
	A1	- - -	SL-WH	SL-WH	SL-WH	5	SL-WH
	LG	LG	RD-BL	- - -	- - -	31	RD-BL
	L	L2	BL-RD	BL-RD	BL-RD	6	BL-RD
3	T	3T	RD-OR	RD-OR	RD-OR	32	RD-OR
	R	3R	OR-RD	OR-RD	OR-RD	7	OR-RD
	A	3H	RD-GN	RD-GN	RD-GN	33	RD-GN
	A1	- - -	GN-RD	GN-RD	GN-RD	8	GN-RD
	LG	LG	RD-BN	RD-BN	RD-BN	34	RD-BN
	L	L3	BN-RD	BN-RD	BN-RD	9	BN-RD
4	T	4T	RD-SL	RD-SL	RD-SL	35	RD-SL
	R	4R	SL-RD	SL-RD	SL-RD	10	SL-RD
	A	4H	BK-BL	BK-BL	BK-BL	36	BK-BL
	A1	- - -	BL-BK	BL-BK	BL-BK	11	BL-BK
	LG	LG	BK-OR	- - -	- - -	37	BK-OR
	L	L4	OR-BK	OR-BK	OR-BK	12	OR-BK
5	T	5T	BK-GN	BK-GN	BK-GN	38	BK-GN
	R	5R	GN-BK	GN-BK	GN-BK	13	GN-BK
	A	5H	BK-BN	BK-BN	BK-BN	39	BK-BN
	A1	- - -	BN-BK	BN-BK	BN-BK	14	BN-BK
	LG	LG	BK-SL	- - -	- - -	40	BK-SL
	L	L5	SL-BK	SL-BK	SL-BK	15	SL-BK
AUX. SIGS.		6	YL-BL	YL-BL	- - -	41	YL-BL
		5	BL-YL	BL-YL	- - -	16	BL-YL
		4	YL-OR	- - -	YL-OR	42	YL-OR
		3	OR-YL	- - -	OR-YL	17	OR-YL
HOLD LAMP		LG	YL-GN	- - -	YL-GN	43	YL-GN
		LH	GN-YL	- - -	GN-YL	18	GN-YL
BZ LP		L2	YL-BN	YL-BN	YL-BN	44	YL-BN
PB SIG		SG	BN-YL	BN-YL	BN-YL	19	BN-YL
B-B1		RT	YL-SL	YL-SL	YL-SL	45	YL-SL
R-R1		RR	SL-YL	SL-YL	SL-YL	20	SL-YL
EXCL. CKT.	T	ET	VI-BL	VI-BL	- - -	46	VI-BL
	R	ER	BL-VI	BL-VI	- - -	21	BL-VI
	A	EH	VI-OR	VI-OR	- - -	47	VI-OR
	A1	EB	OR-VI	OR-VI	- - -	22	OR-VI
SPEAKER PHONE	T1	RR	VI-GN	VI-GN	- - -	48	VI-GN
	R1	9	GN-VI	GN-VI	- - -	23	GN-VI
	P4	8	VI-BN	VI-BN	- - -	49	VI-BN
	P3	7	BN-VI	BN-VI	- - -	24	BN-VI
	AG	N	VI-SL	VI-SL	- - -	50	VI-SL
	LK	L1	SL-VI	SL-VI	- - -	25	SL-VI

AW 81-92

TCI Library: www.telephonecollectors.info

TABLE D

LINE/SIGNAL KEY CONVERSIONS FOR 6-BUTTON SETS

NO. OF LINE KEYS	NO. OF SIG. KEYS CONVERTED FROM LINE KEYS	NO. OF PRIVATE & INTERCOM LINES WITH COMMON SIG. KEY	KEY LEADS			
			YL-BN	BN	SL-RD	BN-BK
5			M	M	M	X
4	1		M	M	M	SG
3	2		M	M	SG	X
4	1	2	M	X	5H	SG
4	1	3	X	X	5H	SG

AW-81-95

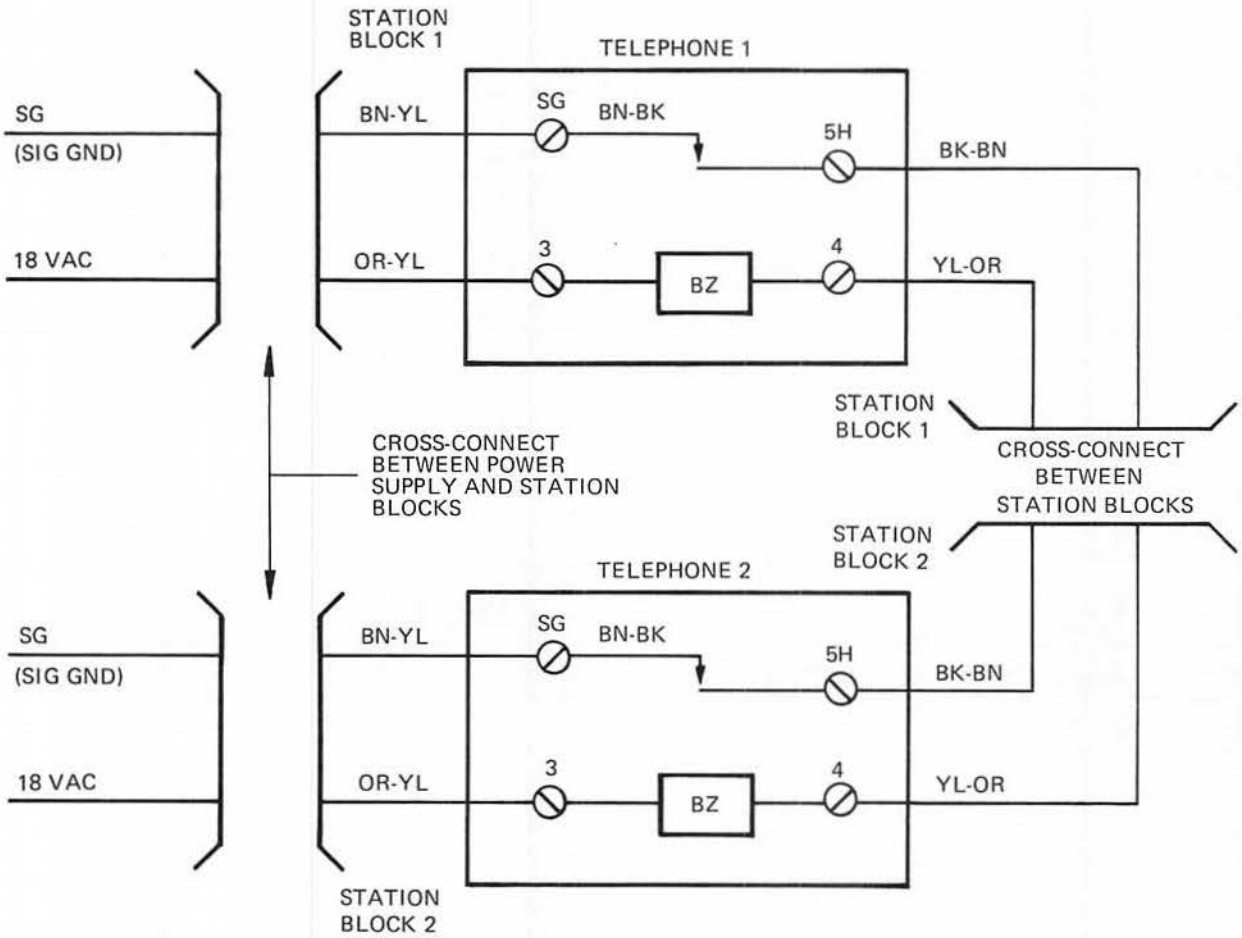

NOTE: MOVE THE BN-BK LEAD FROM TERMINAL X TO TERMINAL SG INSIDE EACH TELEPHONE.

AW 81-151

Figure 2: Circuit Diagram For Signal Buzzer

TCI Library: www.telephonecollectors.info

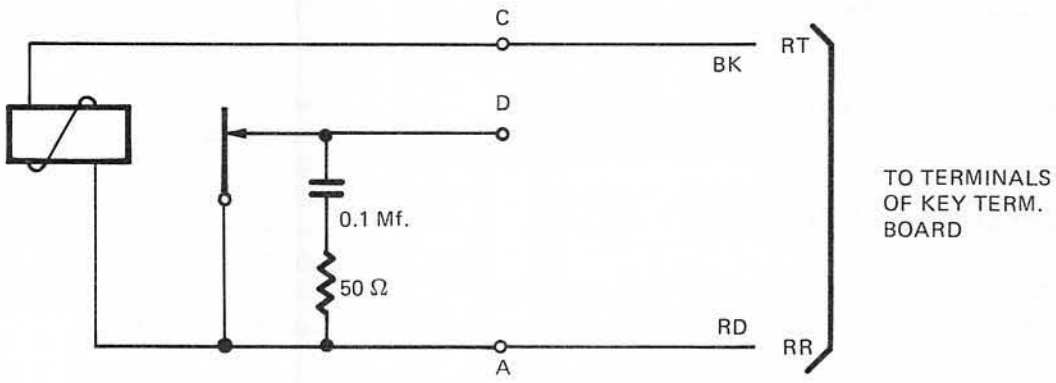

NOTE: THIS ARRANGEMENT IS FOR 105 VAC.

AW 81-97

Figure 3: Circuit Diagram For Buzzer Replacing Ringer

(a) Connect the BK lead from the buzzer connection C to terminal RT on the key terminal board of the telephone.

(b) Connect the RD lead from the buzzer connection A to terminal RR on the key terminal board of the telephone.

6. BIASED RINGER WIRING

6.01 The biased ringer option allows for selective ringing of only those lines which are designated as such and gives an added convenience feature to the system. (Lines can also be selectively "common audibled" at the key system so one ringer can serve from one to five lines if desired.) Wiring for biased ringing should be as follows. Refer to circuit diagram in Figure 4.

(a) Connect the BK lead from the ringer to the T terminal of the selected line on the key terminal board.

(b) Connect the SL lead from the ringer to the K terminal of the network.

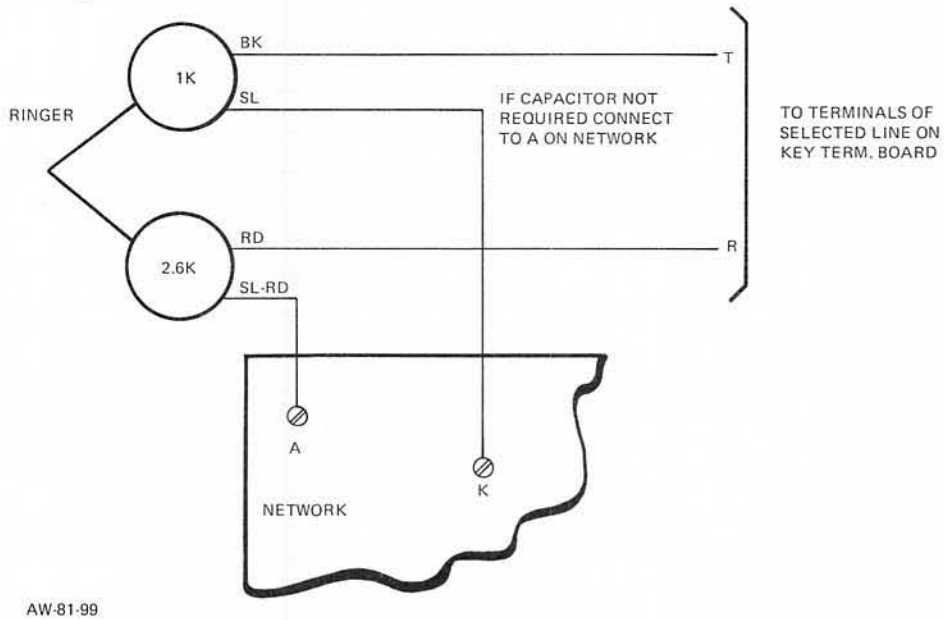

AW-81-99

Figure 4: Circuit Diagram For Biased Ringer

TCI Library: www.telephonecollectors.info

(c) Connect the SL-RD lead from the ringer to the A terminal of the network.

(d) Connect the RD lead from the ringer to the R terminal of the selected line on the key terminal board.

7. BUSY LAMP CONNECTIONS

7.01 Busy lamp connections are dependent on the type of key system being used. Connections according to the 1A2 systems should be as follows. Refer to the circuit diagram in Figure 5.

(a) With station busy lamp

(1) Connect the SL-WH lead from contact e of the cradle switch to terminal 1B of the key terminal board.

(2) Connect the SL-GN lead from contact d of the cradle switch to terminal L2 of the network.

(3) Connect the SL-YL lead from contact b of the cradle switch to terminal 9 of the key terminal board.

(4) The YL lead from the hold key is connected to terminal M of the key terminal board.

Additional wiring is required for station busy lamp with the 1A2 system. A 1N4004 diode must be placed in series between terminals G and L2 on the network. A strap is placed between G on the network and N on the key terminal board. A 1N4004 diode is also placed between terminals L2 and L1 on the network.

(b) No station busy lamp

(1) Connect the SL-WH lead from contact e of the cradle switch to terminal 1B of the key terminal board.

(2) Connect the SL-GN lead from contact d of the cradle switch to terminal N of the key terminal board.

(3) Connect the SL-YL lead from contact b of the cradle switch to terminal 9 of the key terminal board.

(4) The YL lead from the hold key is connected to terminal M of the key terminal board.

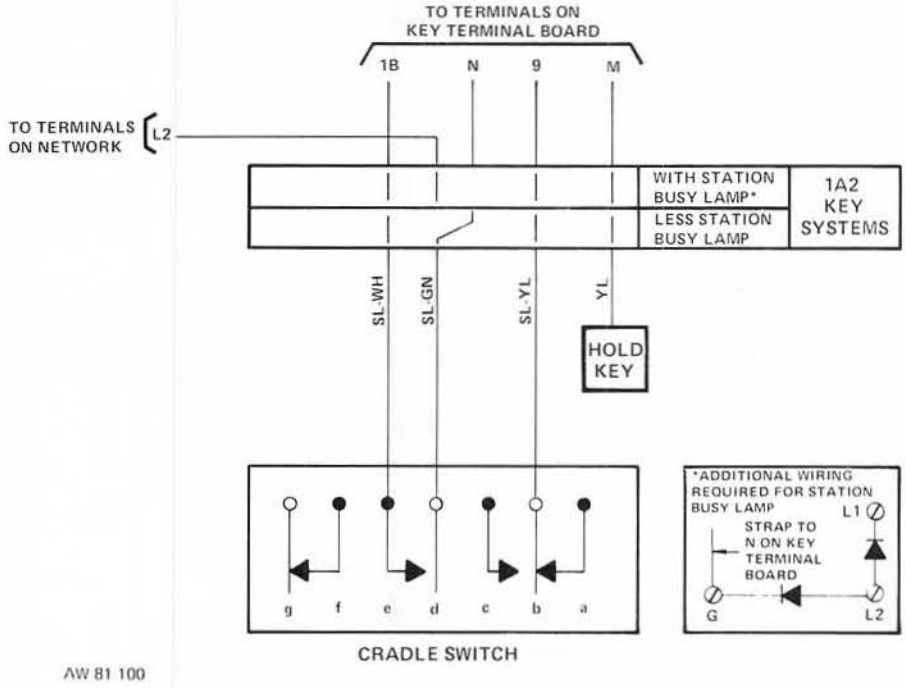

Figure 5: Circuit Diagram, Busy Lamp

TCI Library: www.telephonecollectors.info

8. CONNECT 174B CALL ANNOUNCER TO 6-BUTTON TELEPHONES

8.01 A 174B call announcer is used to provide tone-and-voice signaling to an intercom station and handsfree answerback from an intercom station. The 174B call announcer connects to 6-button telephones as follows:

(a) Connect the BK (-24 VDC) lead of the call announcer together with the VI-BL lead of the telephone to ET of the terminal board.

(b) Connect the YL (GND) lead of the call announcer together with the YL-OR lead of the telephone to terminal 4 of the terminal board.

(c) Connect the RD (CA RST) lead of the call announcer together with the VI-BN lead of the telephone of terminal 8 of the terminal board.

(d) Connect the GN (CA RT) lead of the call announcer together with the VI-GN lead of the telephone to terminal 1 of the terminal board. (The VI-GN lead will have to be moved from RR on the network.)

TCI Library: www.telephonecollectors.info

6-BUTTON, ROTARY DIAL, KEY TELEPHONES

REPLACEMENT PARTS

1. GENERAL

1.01 This document covers the 6-button, rotary dial, key telephones. (See Figure 1.) An exploded-view drawing of the telephone with the major assembly groups (see Figure 2) and a replacement parts list (see Table A) are included.

1.02 This section is reissued to reflect changes in the 6-button, rotary dial, key telephone and to incorporate the changes listed in the Telephone Apparatus Practices Change Notice, Section 11-510-100. Whenever this section is reissued, reason for reissue will be listed in this paragraph.

1.03 For additional information on description and installation of the telephones, refer to Section 50-565-100. The circuit labels appear in Section 50-565-102. Related documents of the ITT Telephone Apparatus Practices Manual provide information on components.

1.04 The Models 564/565, 566/567 desk telephones are 6-button, rotary dial, anti-sidetone type units that operate efficiently over a wide range of loop resistances and line impedances. They are designed to be used with key systems such as the ITT 1A2 system where several telephones have access to the same lines, CO trunks, or intercom lines.

1.05 The Model 564 type 40 telephone is the standard 6-button, rotary dial, desk type, key telephone. The Model 565 type 40 telephone is similar to the Model 564 type 40 with the addition of an exclusion switch. The Model 566 type 40 telephone is similar to the Model 564 type 40 with the addition of the hookswitch restoration feature. The Model 567 type 40 telephone is similar to the Model 565 type 40 with the addition of the hookswitch restoration feature.

1.06 The Models 564/565, 566/567 key telephones are identified by a code number stamped in ink on the bottom of the base plate. Refer to Section 50-565-100 of the ITT Telephone Apparatus Practices Manual for ordering information of complete telephones and for an explanation of each code number.

AW 82-356

Figure 1: 6-Button, Rotary Dial, Key Telephone

TCI Library: www.telephonecollectors.info

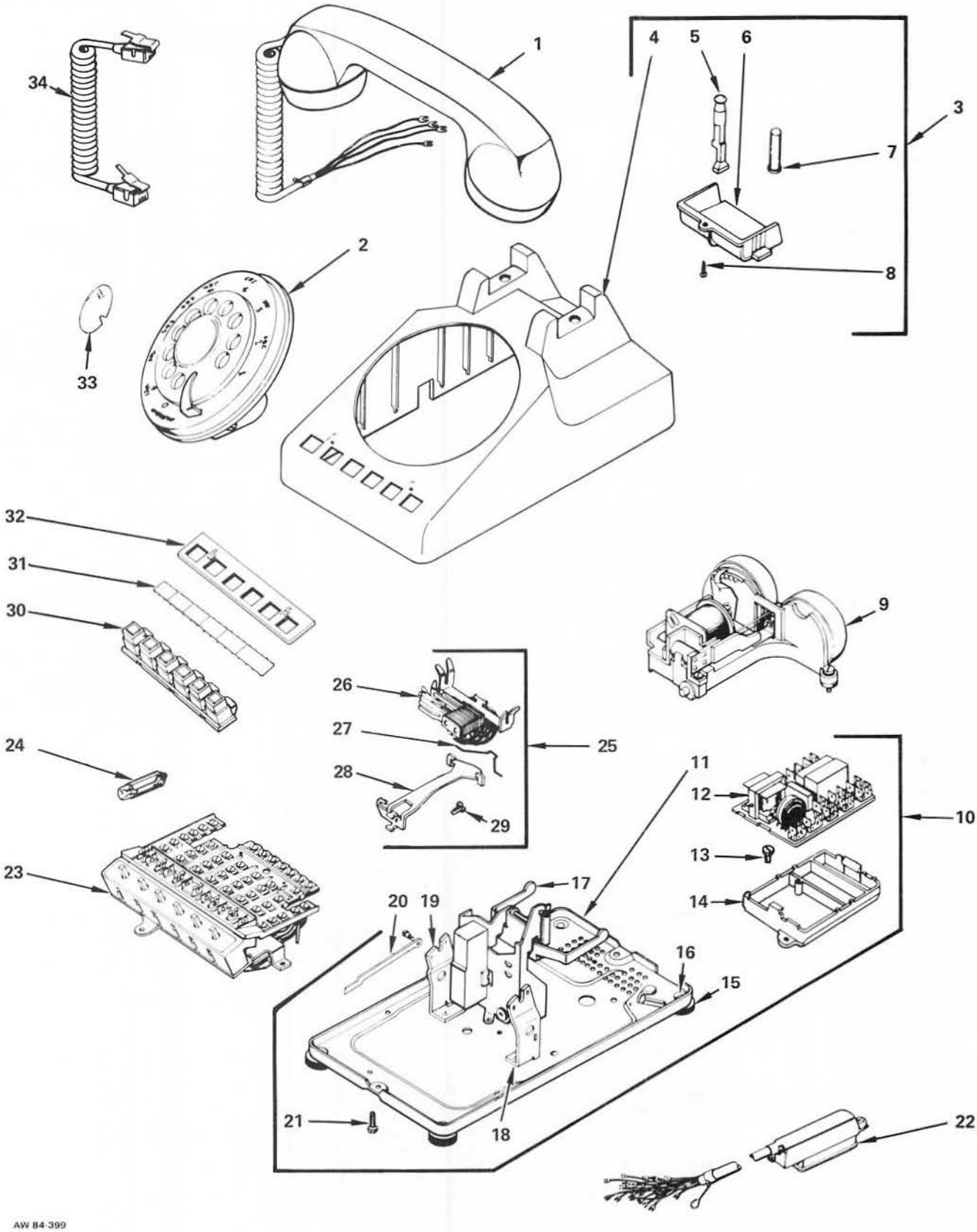

Figure 2: 6-Button, Rotary Dial, Key Telephone, Exploded View

TCI Library: www.telephonecollectors.info

TABLE A

REPLACEMENT PARTS LIST

INDEX NO	PART NUMBER	DESCRIPTION	QUANTITY USED									
		6-Button, Rotary Dial, Desk Telephone	564/40	564/41	565/40	565/41	565/42	566/40	566/41	567/40	567/41	567/42
1	0065**-0C2	Handset Assembly, Nonmodular [1]	1	1	1	1	1	1	1	1	1	1
1	0065**-0M2	Handset Assembly, Modular[1]	1	1	1	1	1	1	1	1	1	1
2	0030**-00G	Dial Assembly, Metropolitan (Letters And Numerals)[1]	1	1	1	1	–	1	1	1	1	–
2	0030**-00D	Dial Assembly, Regular (Numerals Only)[1]	1	1	1	1	–	1	1	1	1	–
2	0035**-00G	Dial Assembly, Handsfree, Metropolitan (Letters And Numerals)[1]	–	–	–	–	1	–	–	–	–	1
2	0035**-00D	Dial Assembly, Handsfree, Regular (Numerals Only)[1]	–	–	–	–	1	–	–	–	–	1
3	087490-0**	Housing And Plunger Assembly	1	–	–	–	–	–	–	–	–	–
3	181492-0**	Housing And Plunger Assembly	–	1	–	–	–	–	–	–	–	–
3	087491-0**	Housing And Plunger Assembly	–	–	1	–	1	–	–	–	–	–
3	181494-0**	Housing And Plunger Assembly	–	–	–	1	–	–	–	–	–	–
3	087489-0**	Housing And Plunger Assembly	–	–	–	–	–	1	–	–	–	–
3	180217-0**	Housing And Plunger Assembly	–	–	–	–	–	–	1	–	–	–
3	180606-0**	Housing And Plunger Assembly	–	–	–	–	–	–	–	1	–	1
3	181862-0**	Housing And Plunger Assembly	–	–	–	–	–	–	–	–	1	–
3	187898-0**	Housing And Plunger Assembly, Full-Modular	1	–	–	–	–	–	–	–	–	–
3	187910-0**	Housing And Plunger Assembly, Full-Modular	–	1	–	–	–	–	–	–	–	–
3	187899-0**	Housing And Plunger Assembly, Full-Modular	–	–	1	–	1	–	–	–	–	–
3	187912-0**	Housing And Plunger Assembly, Full-Modular	–	–	–	1	–	–	–	–	–	–
3	187897-0**	Housing And Plunger Assembly, Full-Modular	–	–	–	–	–	1	–	–	–	–
3	187903-0**	Housing And Plunger Assembly, Full-Modular	–	–	–	–	–	–	1	–	–	–
3	187904-0**	Housing And Plunger Assembly, Full-Modular	–	–	–	–	–	–	–	1	–	1
3	187913-0**	Housing And Plunger Assembly, Full-Modular	–	–	–	–	–	–	–	–	1	–
4	087475-0**	Housing	1	–	1	–	1	–	–	–	–	–
4	181493-0**	Housing	–	1	–	1	–	–	–	–	–	–
4	087488-0**	Housing	–	–	–	–	–	1	–	1	–	1
4	180216-0**	Housing	–	–	–	–	–	–	1	–	1	–
4	187919-0**	Housing, Full-Modular	1	–	1	–	1	–	–	–	–	–
4	187911-0**	Housing, Full-Modular	–	1	–	1	–	–	–	–	–	–
4	187896-0**	Housing, Full-Modular	–	–	–	–	–	1	–	1	–	1
4	187902-0**	Housing, Full-Modular	–	–	–	–	–	–	1	–	1	–
5	079982-102	Plunger, Exclusion	–	–	1	1	1	–	–	1	1	1
6	079097-0**	Plunger, Retainer	1	1	1	1	1	1	1	1	1	1
7	079101-102	Plunger, Cradle Switch	2	2	1	1	1	2	2	1	1	1
8	075407-102	Screw, Plunger Retainer	1	1	1	1	1	1	1	1	1	1
9	000130-0BA	Ringer[1]	1	1	1	1	1	1	1	1	1	1

TABLE A

REPLACEMENT PARTS LIST (Cont)

TCI Library: www.telephonecollectors.info

INDEX NO	PART NUMBER	DESCRIPTION	QUANTITY USED									
		6-Button, Rotary Dial, Desk Telephone	564/40	564/41	565/40	565/41	565/42	566/40	566/41	567/40	567/41	567/42
10	079525-101	Base Assembly	1	1	1	1	–	–	–	–	–	–
10	079525-104	Base Assembly	–	–	–	–	–	1	1	1	1	–
10	079525-105	Base Assembly	–	–	–	–	1	–	–	–	–	–
10	079525-111	Base Assembly	–	–	–	–	–	–	–	–	–	1
11	079411-101	Plate, Base	1	1	1	1	1	1	1	1	1	1
12	181427-101	PC Network (#183070-101)[1]	1	1	1	1	1	1	1	1	1	1
13	096407-103	Screw, Network Mounting	1	1	1	1	1	1	1	1	1	1
14	182175-101	Spacer, Network	1	1	1	1	1	1	1	1	1	1
15	182337-101	Foot	4	4	4	4	4	4	4	4	4	4
16	082486-102	Rivet, Foot	4	4	4	4	4	4	4	4	4	4
17	079489-101	Cradle Switch Assembly[1]	1	1	1	1	–	–	–	–	–	–
17	079489-102	Cradle Switch Assembly[1]	–	–	–	–	–	1	1	1	1	–
17	079489-103	Cradle Switch Assembly[1]	–	–	–	–	1	–	–	–	–	–
17	079489-104	Cradle Switch Assembly[1]	–	–	–	–	–	–	–	–	–	1
	079490-101	Spring Nest Assembly (Not Shown)	1	1	1	1	–	1	1	1	1	–
	086406-101	Spring Nest Assembly (Not Shown)	–	–	–	–	1	–	–	–	–	1
	075307-104	Spring, Cradle Return (Not Shown)	1	1	1	1	1	1	1	1	1	1
	075308-101	Pin, Pivot (Not Shown)	1	1	1	1	1	1	1	1	1	1
18	087052-102	Bracket, Dial (R.H.)	1	1	1	1	1	1	1	1	1	1
19	087052-101	Bracket, Dial (L.H.)	1	1	1	1	1	1	1	1	1	1
20	190167-101	Operating Link	–	–	–	–	–	1	1	1	1	1
21	075486-101	Screw, Cabinet Locking	2	2	2	2	2	2	2	2	2	2
22	184352-066	Cord, Mounting; 34-Conductor With Connector	1	1	–	–	–	1	1	–	–	–
22	184361-066	Cord, Mounting; 42-Conductor With Connector	–	–	1	1	–	–	–	1	1	–
22	184368-066	Cord, Mounting; 50-Conductor With Connector	–	–	–	–	1	–	–	–	–	1
23	000636-00A	Key Assembly	1	1	1	1	1	–	–	–	–	–
23	000636-00C	Key Assembly	–	–	–	–	–	1	1	1	1	1
24	000051-00A	Lamp	5	5	5	5	5	5	5	5	5	5
25	079971-101	Exclusion Switch Assembly	–	–	1	1	–	–	–	1	1	–
26	079970-101	Spring Assembly	–	–	1	1	–	–	–	1	1	–
27	079624-101	Retainer	–	–	1	1	–	–	–	1	1	–
28	079605-101	Mounting Bracket	–	–	1	1	–	–	–	1	1	–
29	069020-103	Screw, B.H.M	–	–	1	1	–	–	–	1	1	–
30	087472-101	Plunger And Retainer Assembly (Key Strip)	1	1	1	1	1	1	1	1	1	1
	087470-102	Button, Red (Not Shown)	1	1	1	1	1	1	1	1	1	1
	087470-101	Button, Clear (Not Shown)	5	5	5	5	5	5	5	5	5	5
	087471-101	Strip (Not Shown)	1	1	1	1	1	1	1	1	1	1
	087469-101	Retainer (Not Shown)	1	1	1	1	1	1	1	1	1	1

TCI Library: www.telephonecollectors.info

TABLE A

REPLACEMENT PARTS LIST (Cont)

INDEX NO	PART NUMBER	DESCRIPTION	QUANTITY USED									
		6-Button, Rotary Dial, Desk Telephone	**564/40**	**564/41**	**565/40**	**565/41**	**565/42**	**566/40**	**566/41**	**567/40**	**567/41**	**567/42**
31	082028-101	Card, Designation Strip	1	1	1	1	1	1	1	1	1	1
32	087474-101	Escutcheon Assembly	1	1	1	1	1	1	1	1	1	1
33	075415-101	Card, Number	1	1	1	1	1	1	1	1	1	1
34	9018**-072	Cord, Handset, Modular	1	1	1	1	1	1	1	1	1	1
	600152-611 -002	Jack Assembly, Handset Cord, Modular (Not Shown)	1	1	1	1	1	1	1	1	1	1
	182990-105	Insulator Assembly, Modular (Not Shown)	1	1	1	1	1	1	1	1	1	1
	181971-102 181973-101	Pushbutton, Grounding (Not Shown) Pushbutton, Operator Recall (Not Shown)	– –	1 –	– –	1 –	– –	– 1	1 1	– 1	1 1	– 1

NOTES:

1 Refer to Components Parts Section of this manual for Assembly Parts List.
** Substitute 2-digit color code when ordering.

AW 84-769

TCI Library: www.telephonecollectors.info

6-BUTTON, ROTARY DIAL, KEY TELEPHONES

CIRCUIT LABELS

1. GENERAL

1.01 This document covers the 6-button, rotary dial, key telephones. (See Figure 1.) The circuit labels that are related to the various models of 6-button, rotary dial, key telephones and the associated features available in each are included in this document. (See Table A.)

AW 86-372

Figure 1: 6-Button, Rotary Dial, Key Telephone

1.02 This section is reissued to provide the latest issue of circuit labels for the following 6-button, rotary dial, key telephones:

(a) Model 564, Types 40 and 41

(b) Model 565, Types 40 and 41

(c) Model 565, Type 42

(d) Model 566, Types 40 and 41

(e) Model 567, Types 40 and 41

(f) Model 567, Type 42

Issue 2 of this section provided the circuit label for Model 565 Type 42 at issue 3 and for Model 557 Type 40 at issue 3.

1.03 For additional information on description and installation of the telephones, refer to Section 50-565-100. A replacement parts list and an exploded-view drawing for the telephones are contained in Section 50-565-101. Related documents of the ITT Telephone Apparatus Practices Manual provide information on components.

1.04 The Models 564/565, 566/567 key telephones are identified by a code number stamped in ink on the bottom of the base plate. Refer to Section 50-565-100 of the ITT Telephone Apparatus Practices Manual for ordering information of complete telephones and for an explanation of each code number.

1.05 The Models 564/565, 566/567 key telephones are 6-button, rotary dial, anti-sidetone type units that operate efficiently over a wide range of loop resistances and line impedances. They are designed to be used with key systems, such as the ITT 1A2 System, where several telephones have access to the same lines, CO trunks, or intercom lines.

1.06 The Model 564 Type 40 telephone is the standard 6-button, rotary dial, desk type, key telephone. The Model 565 Type 40 telephone is similar to the Model 564 Type 40 with the addition of an exclusion switch. The Model 566 Type 40 telephone is similar to the Model 564 Type 40 with the addition of the hookswitch restoration feature. The Model 567 Type 40 telephone is similar to the Model 565 Type 40 with the addition of the hookswitch restoration feature.

TABLE A

LIST OF CIRCUIT LABELS

MODEL NO	TYPE NO	FIGURE NO
564	40, 41	2
565	40, 41	3
565	42	4
566	40, 41	5
567	40, 41	6
567	42	7

AW 86-335

TCI Library: www.telephonecollectors.info

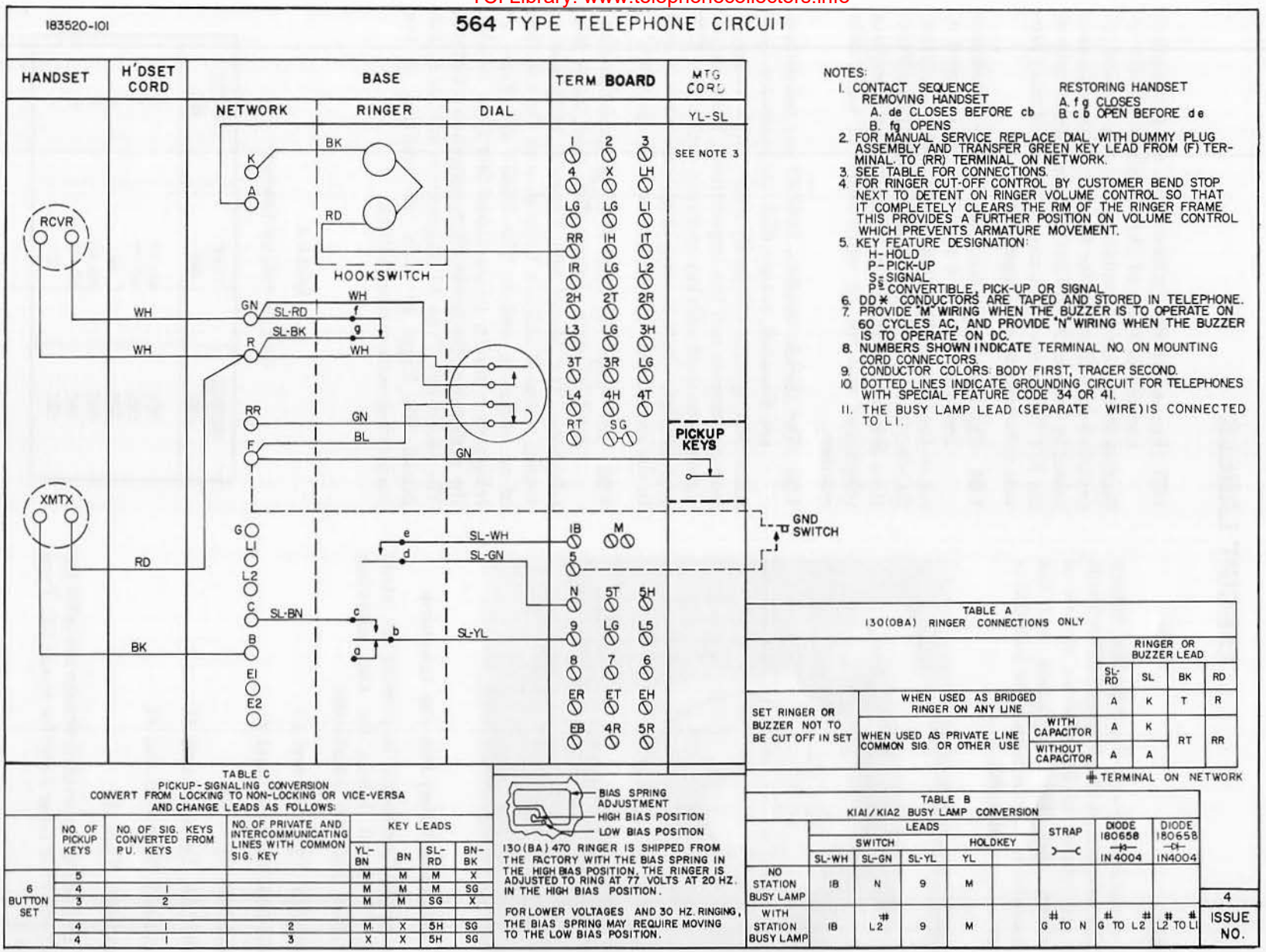

Figure 2: Circuit Label, Model 564 Types 40, 41 (Sheet 1 of 2)

TCI Library: www.telephonecollectors.info

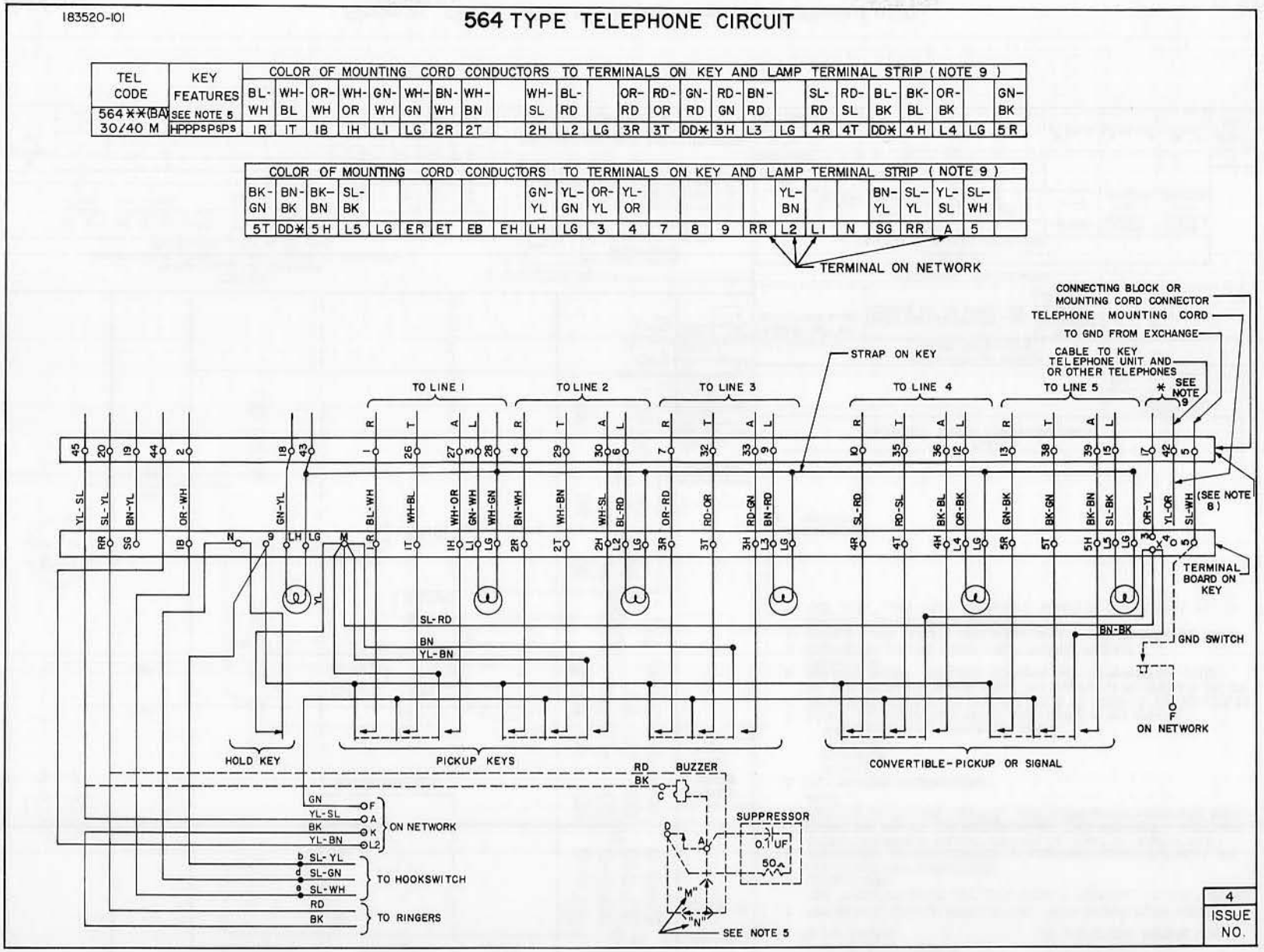

Figure 2: Circuit Label, Model 564 Types 40, 41 (Sheet 2 of 2)

TCI Library: www.telephonecollectors.info

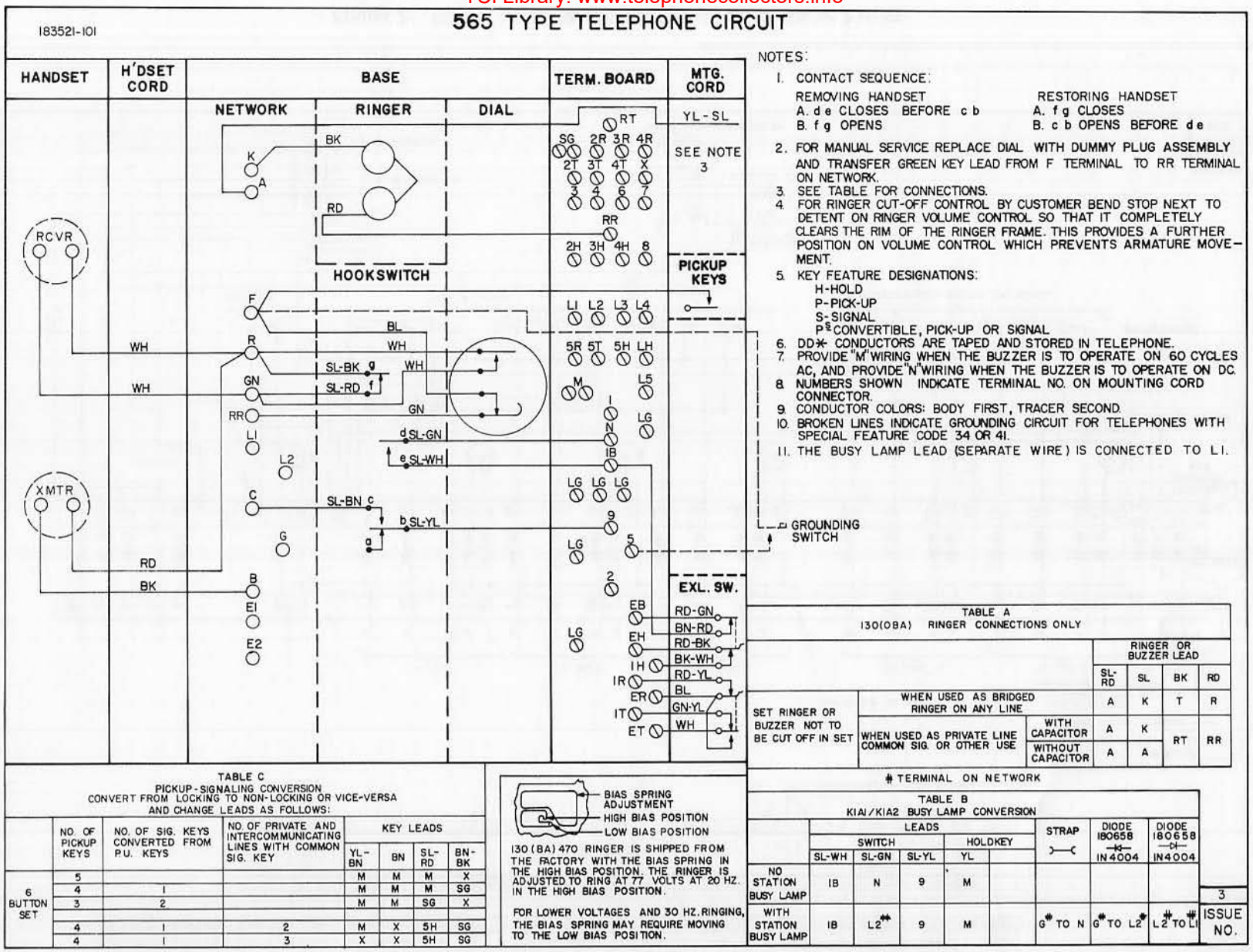

Figure 3: Circuit Label, Model 565 Types 40, 41 (Sheet 1 of 2)

TCI Library: www.telephonecollectors.info

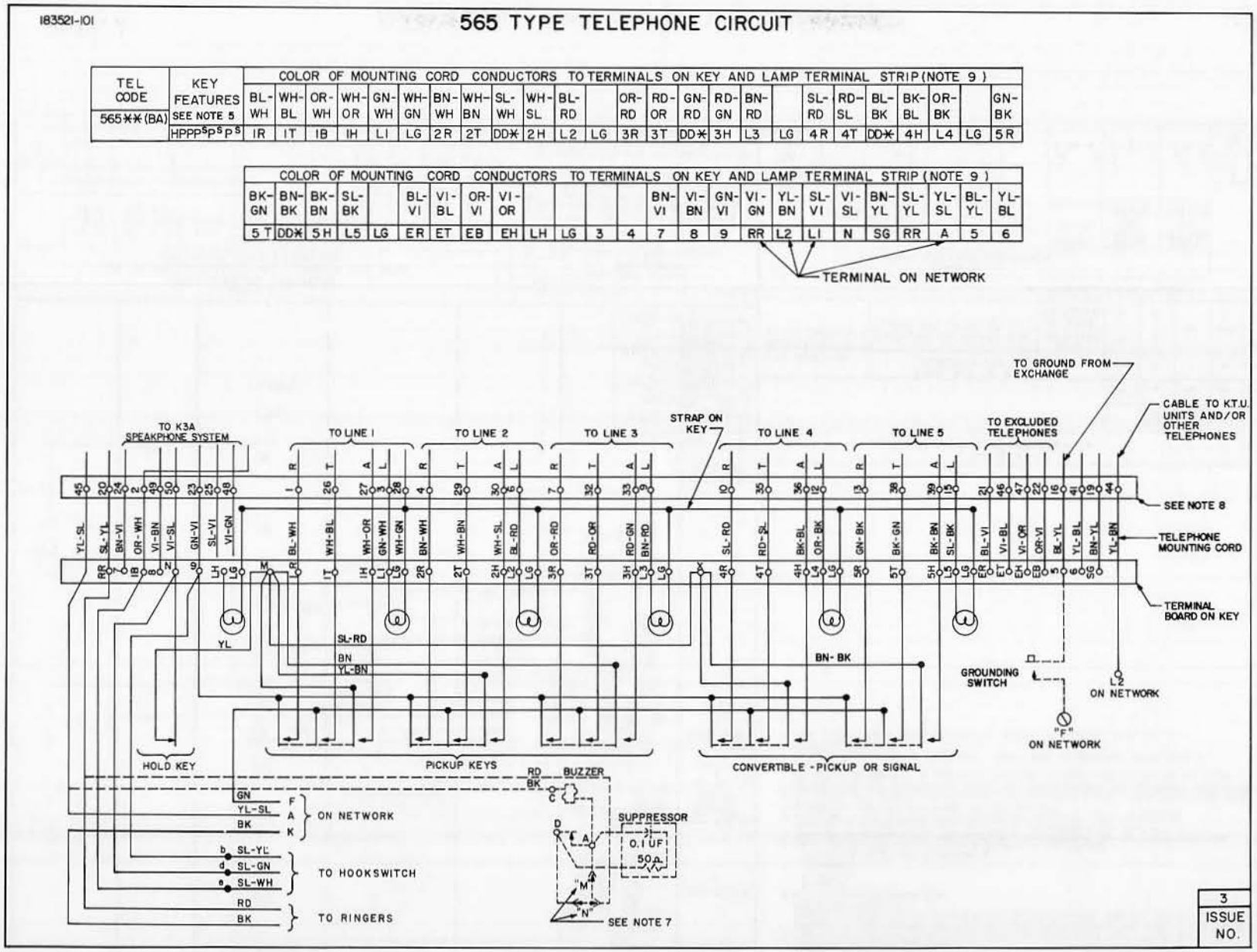

Figure 3: Circuit Label, Model 565 Types 40, 41 (Sheet 2 of 2)

TCI Library: www.telephonecollectors.info

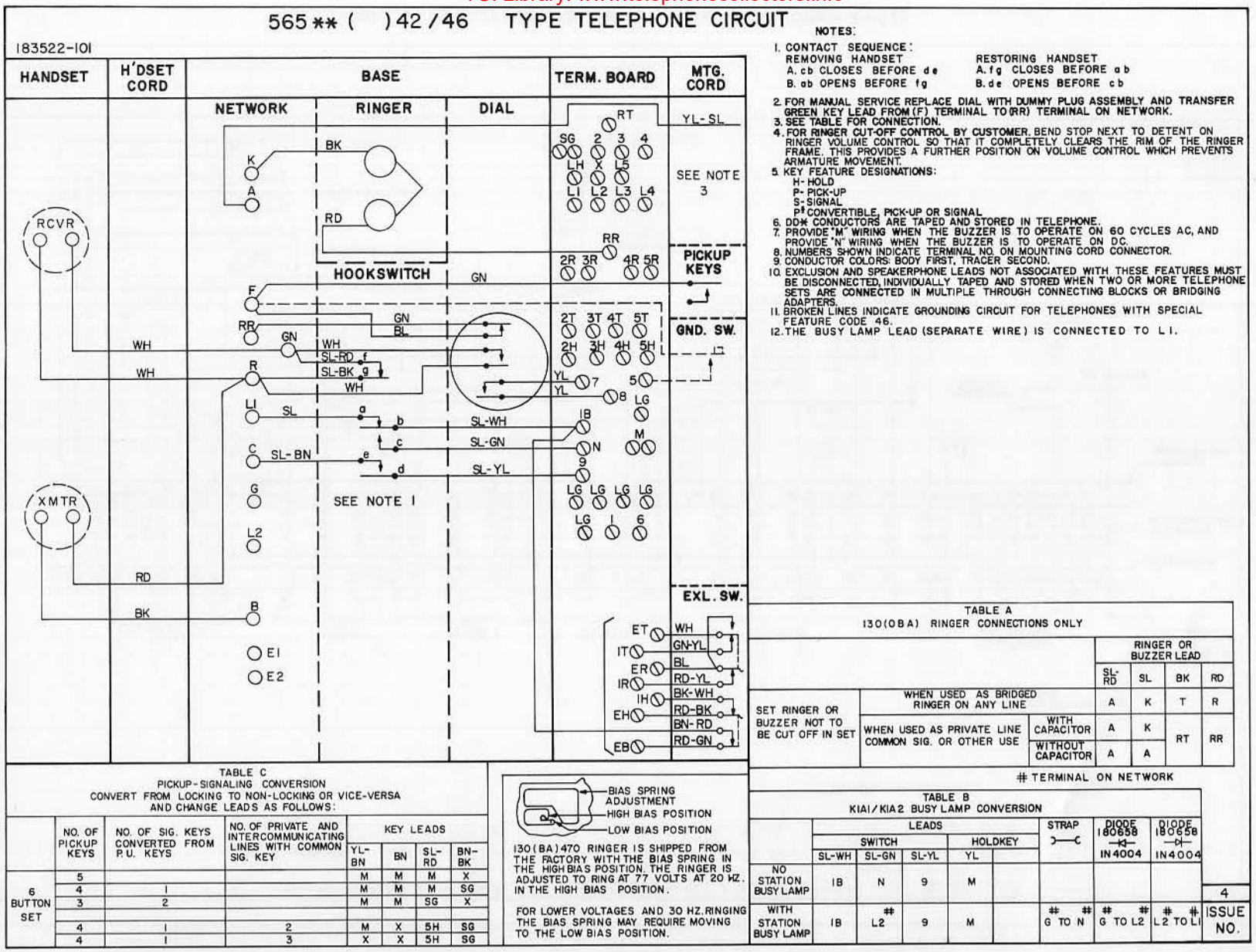

TABLE A
130(OBA) RINGER CONNECTIONS ONLY

			RINGER OR BUZZER LEAD			
			SL-RD	SL	BK	RD
SET RINGER OR BUZZER NOT TO BE CUT OFF IN SET	WHEN USED AS BRIDGED RINGER ON ANY LINE		A	K	T	R
	WHEN USED AS PRIVATE LINE COMMON SIG. OR OTHER USE	WITH CAPACITOR	A	K	RT	RR
		WITHOUT CAPACITOR	A	A		

TERMINAL ON NETWORK

TABLE B
KIA1/KIA2 BUSY LAMP CONVERSION

	LEADS					STRAP	DIODE 180658 IN4004	DIODE 180658 IN4004	
	SWITCH			HOLDKEY					
	SL-WH	SL-GN	SL-YL	YL					4
NO STATION BUSY LAMP	1B	N	9	M					
WITH STATION BUSY LAMP	1B	# L2	9	M		# # G TO N	# # G TO L2	# # L2 TO L1	ISSUE NO.

TABLE C
PICKUP-SIGNALING CONVERSION
CONVERT FROM LOCKING TO NON-LOCKING OR VICE-VERSA AND CHANGE LEADS AS FOLLOWS:

	NO. OF PICKUP KEYS	NO. OF SIG. KEYS CONVERTED FROM P.U. KEYS	NO. OF PRIVATE AND INTERCOMMUNICATING LINES WITH COMMON SIG. KEY	KEY LEADS			
				YL-BN	BN	SL-RD	BN-BK
6 BUTTON SET	5			M	M	M	X
	4	1		M	M	M	SG
	3	2		M	M	SG	X
	4	1	2	M	X	5H	SG
	4	1	3	X	X	5H	SG

Figure 4: Circuit Label, Model 565 Type 42 (Sheet 1 of 2)

TCI Library: www.telephonecollectors.info

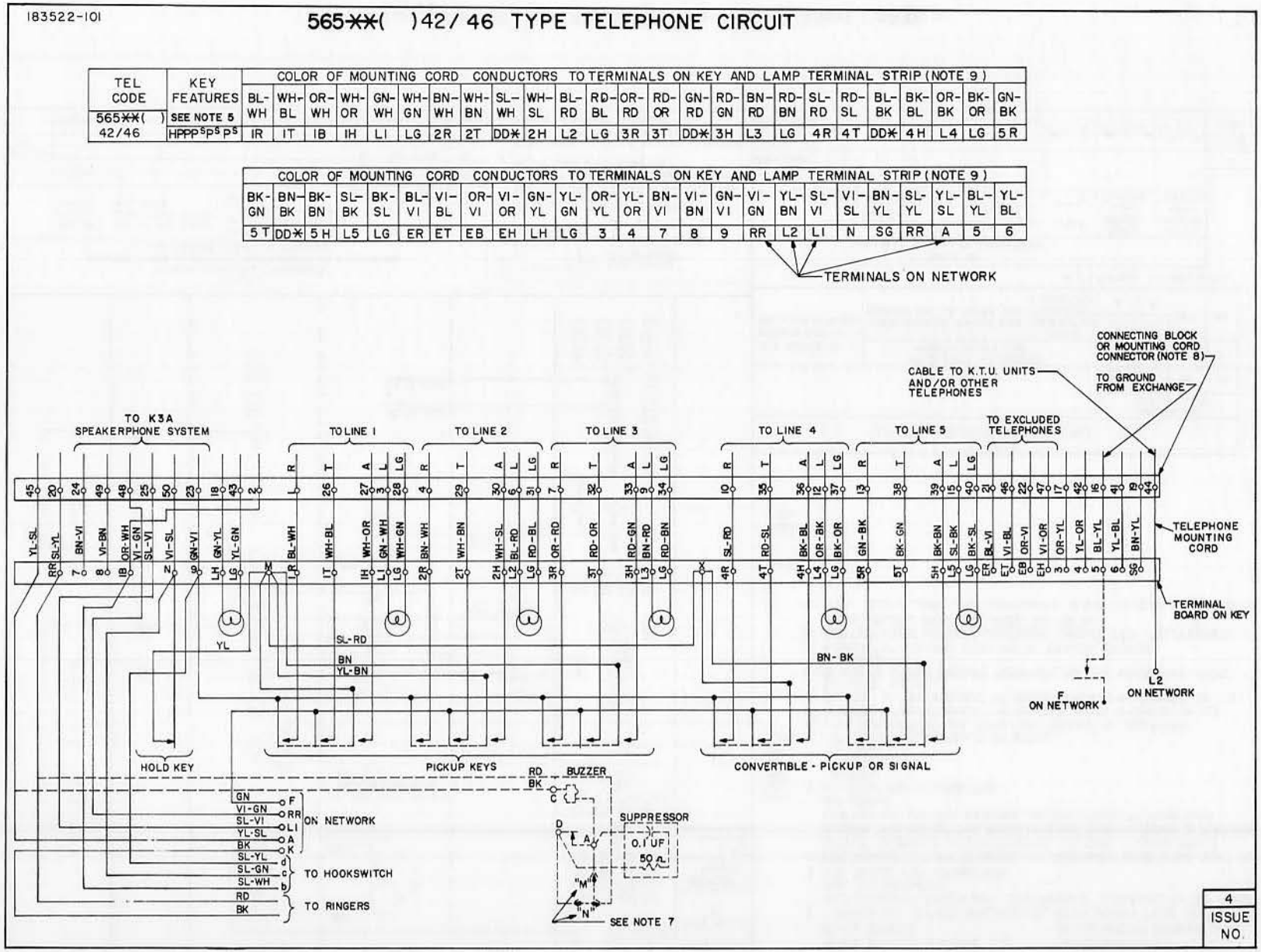

TEL CODE	KEY FEATURES	COLOR OF MOUNTING CORD CONDUCTORS TO TERMINALS ON KEY AND LAMP TERMINAL STRIP (NOTE 9)																								
565XX( )	SEE NOTE 5	BL-WH	WH-BL	OR-WH	WH-OR	GN-WH	WH-GN	BN-WH	WH-BN	SL-WH	WH-SL	BL-RD	RD-BL	OR-RD	RD-OR	GN-RD	RD-GN	BN-RD	RD-BN	SL-RD	RD-SL	BL-BK	BK-BL	OR-BK	BK-OR	GN-BK
42/46	HPPPSPSPS	IR	IT	IB	IH	LI	LG	2R	2T	DDX	2H	L2	LG	3R	3T	DDX	3H	L3	LG	4R	4T	DDX	4H	L4	LG	5R

COLOR OF MOUNTING CORD CONDUCTORS TO TERMINALS ON KEY AND LAMP TERMINAL STRIP (NOTE 9)																								
BK-GN	BN-BK	BK-BN	SL-BK	BK-SL	BL-VI	VI-BL	OR-VI	VI-OR	GN-YL	YL-GN	OR-YL	YL-OR	BN-VI	VI-BN	GN-VI	VI-GN	YL-BN	SL-VI	VI-SL	BN-YL	SL-YL	BL-YL	YL-BL
5T	DDX	5H	L5	LG	ER	ET	EB	EH	LH	LG	3	4	7	8	9	RR	L2	LI	N	SG	RR	A	5	6

Figure 4: Circuit Label, Model 565 Type 42 (Sheet 2 of 2)

TCI Library: www.telephonecollectors.info

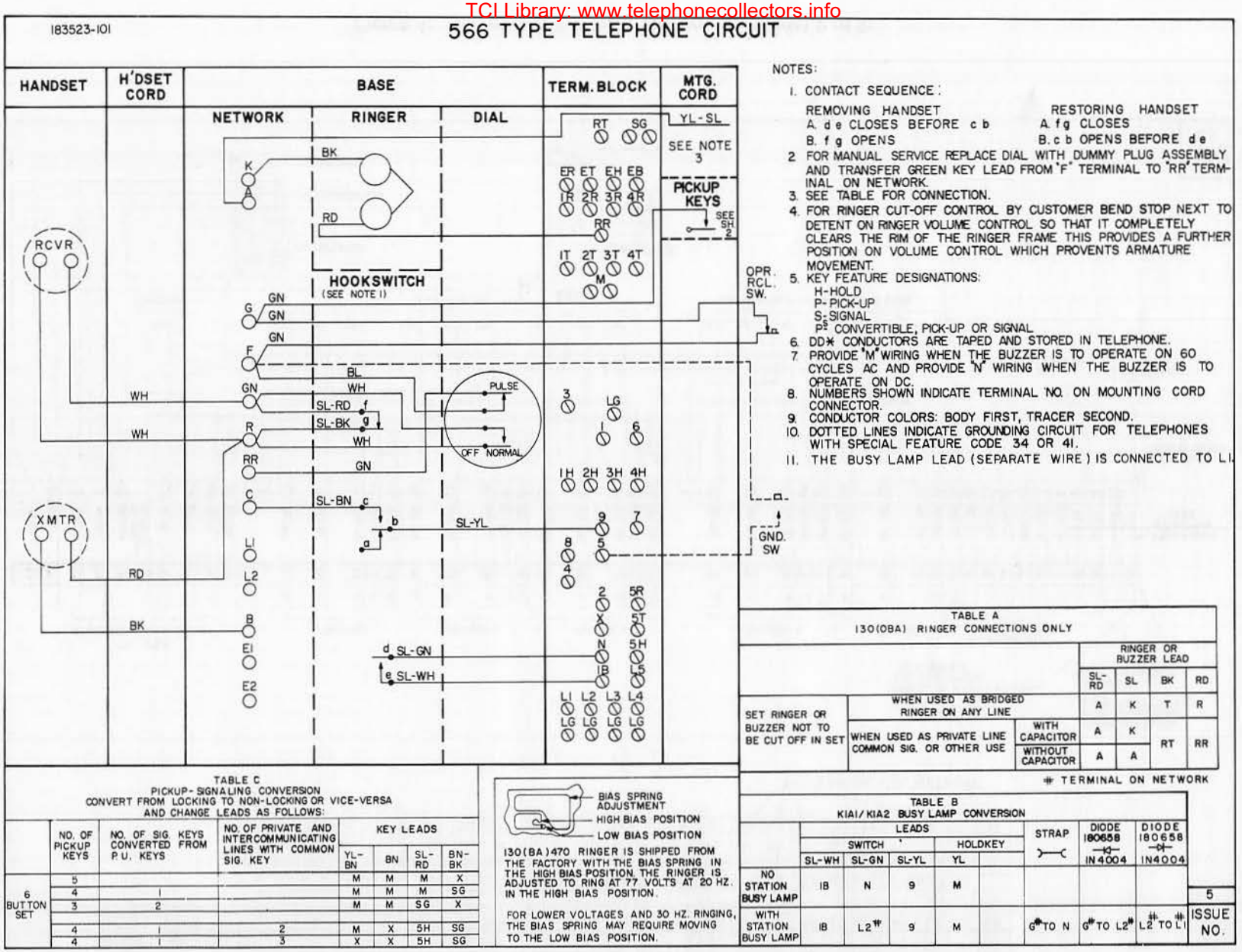

Figure 5: Circuit Label, Model 566 Types 40, 41 (Sheet 1 of 2)

TCI Library: www.telephonecollectors.info

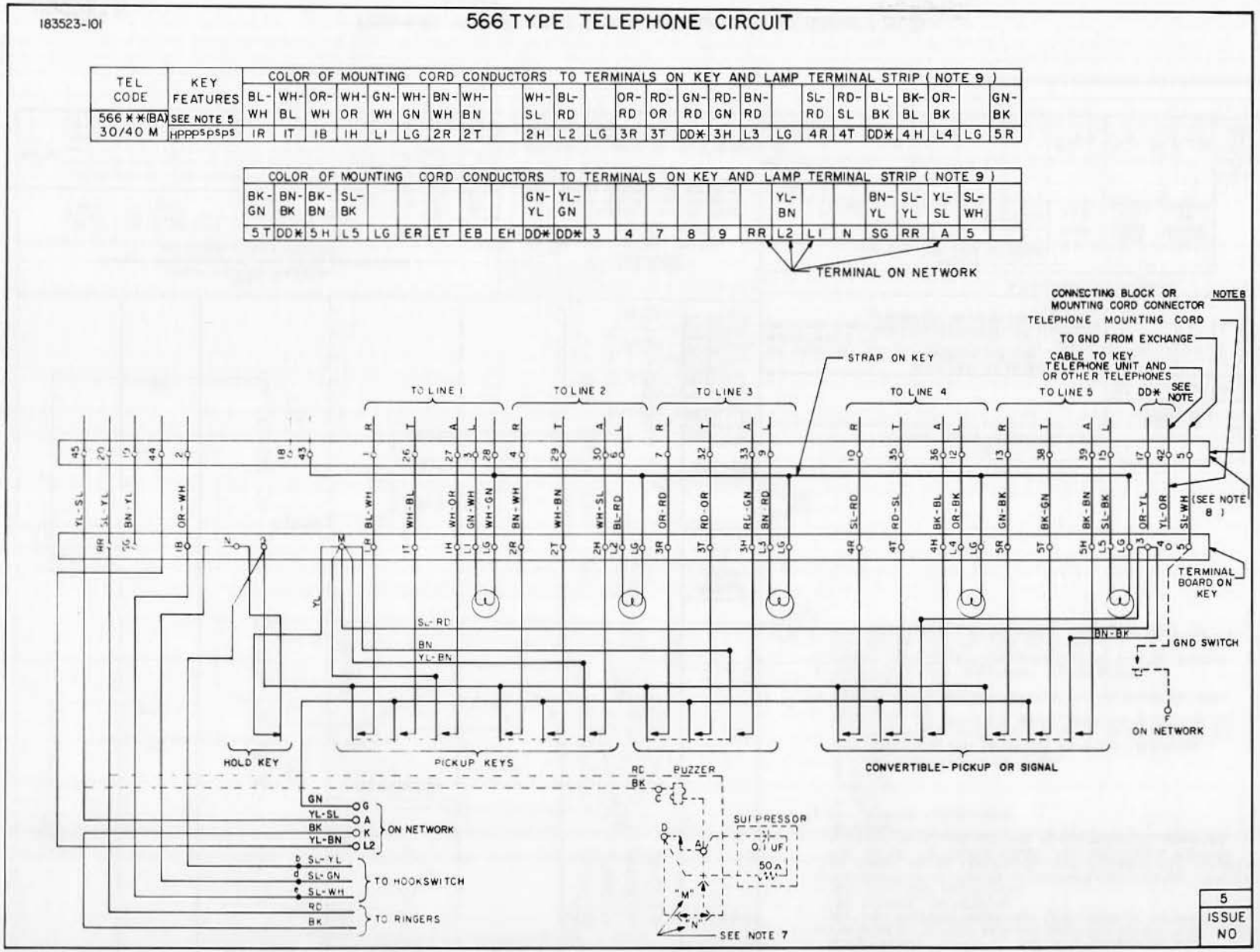

TEL CODE	KEY FEATURES	COLOR OF MOUNTING CORD CONDUCTORS TO TERMINALS ON KEY AND LAMP TERMINAL STRIP (NOTE 9)																										
566 * *(BA)	SEE NOTE 5	BL-WH	WH-BL	OR-WH	WH-OR	GN-WH	WH-GN	BN-WH	WH-BN		WH-SL	BL-RD		OR-RD	RD-OR	GN-RD	RD-GN	BN-RD		SL-RD	RD-SL	BL-BK	BK-BL	OR-BK		GN-BK
30/40 M	HPPPSPSPS	1R	1T	1B	1H	L1	LG	2R	2T		2H	L2	LG	3R	3T	DD*	3H	L3	LG	4R	4T	DD*	4H	L4	LG	5R

COLOR OF MOUNTING CORD CONDUCTORS TO TERMINALS ON KEY AND LAMP TERMINAL STRIP (NOTE 9)																								
BK-GN	BN-BK	BK-BN	SL-BK						GN-YL	YL-GN						YL-BN			BN-YL	SL-YL	YL-SL	SL-WH	
5T	DD*	5H	L5	LG	ER	ET	EB	EH	DD*	DD*	3	4	7	8	9	RR	L2	L1	N	SG	RR	A	5	

Figure 5: Circuit Label, Model 566 Types 40, 41 (Sheet 2 of 2)

TCI Library: www.telephonecollectors.info

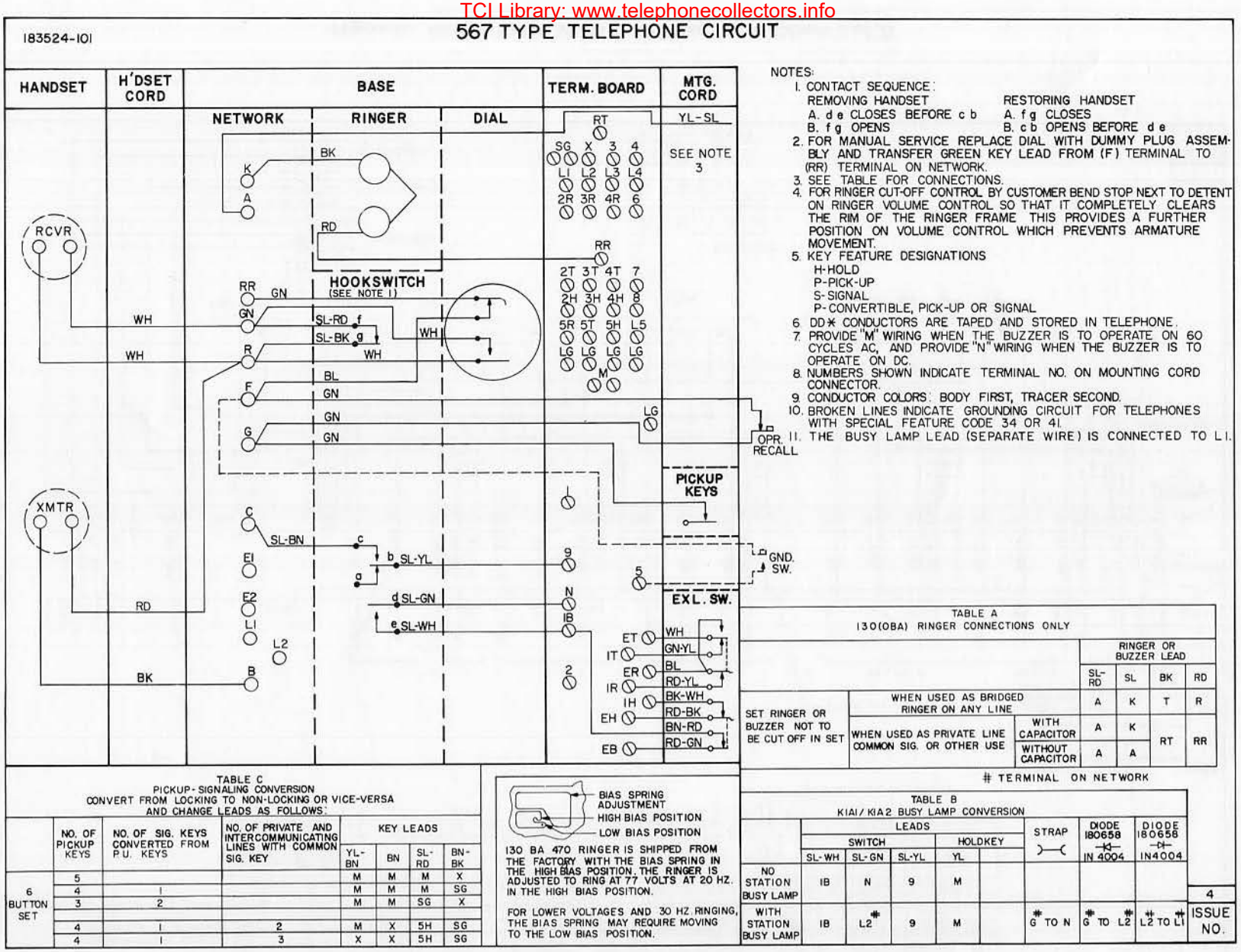

Figure 6: Circuit Label, Model 567 Types 40, 41 (Sheet 1 of 2)

TCI Library: www.telephonecollectors.info

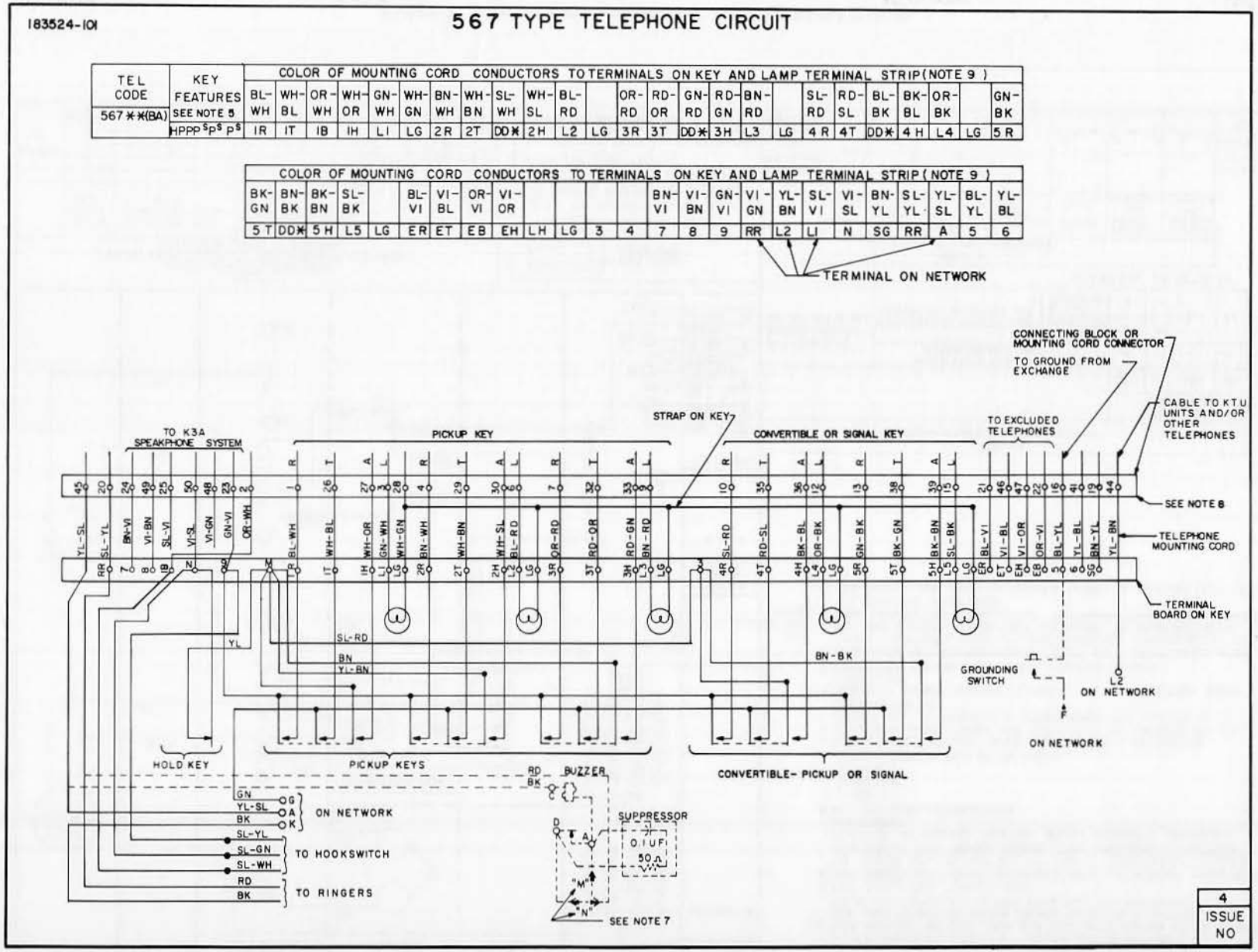

Figure 6: Circuit Label, Model 567 Types 40, 41 (Sheet 2 of 2)

TCI Library: www.telephonecollectors.info

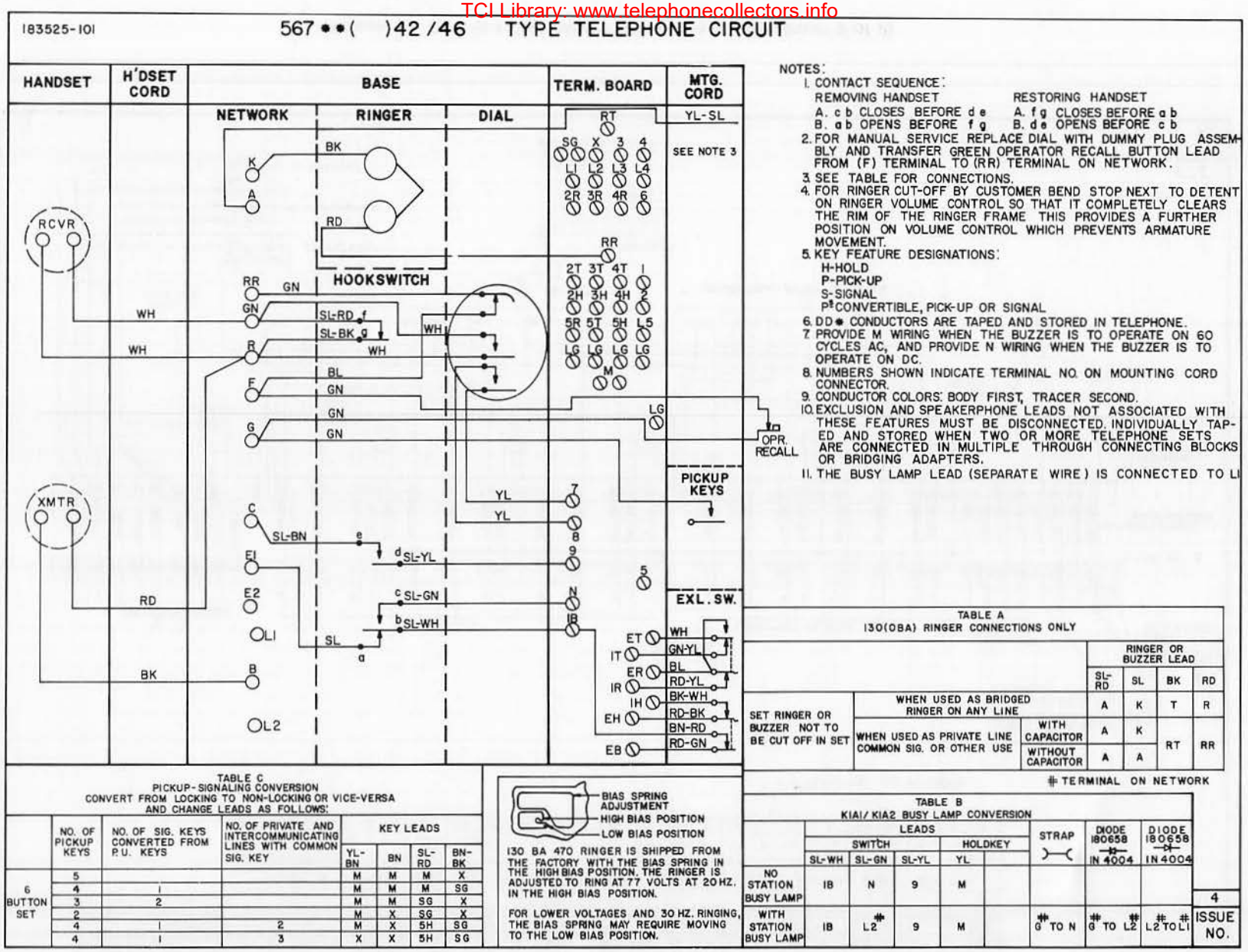

TABLE A
130(OBA) RINGER CONNECTIONS ONLY

			RINGER OR BUZZER LEAD			
			SL-RD	SL	BK	RD
SET RINGER OR BUZZER NOT TO BE CUT OFF IN SET	WHEN USED AS BRIDGED RINGER ON ANY LINE		A	K	T	R
	WHEN USED AS PRIVATE LINE COMMON SIG. OR OTHER USE	WITH CAPACITOR	A	K	RT	RR
		WITHOUT CAPACITOR	A	A		

TABLE B
KIAI/KIA2 BUSY LAMP CONVERSION

	LEADS					STRAP	DIODE 180658 → IN 4004	DIODE 180658 → IN 4004
	SWITCH			HOLDKEY				
	SL-WH	SL-GN	SL-YL	YL				
NO STATION BUSY LAMP	IB	N	9	M				
WITH STATION BUSY LAMP	IB	L2‡	9	M		G‡ TO N	G‡ TO L2‡	L2‡ TO LI‡

4
ISSUE NO.

TABLE C
PICKUP-SIGNALING CONVERSION
CONVERT FROM LOCKING TO NON-LOCKING OR VICE-VERSA AND CHANGE LEADS AS FOLLOWS:

	NO. OF PICKUP KEYS	NO. OF SIG. KEYS CONVERTED FROM P.U. KEYS	NO. OF PRIVATE AND INTERCOMMUNICATING LINES WITH COMMON SIG. KEY	KEY LEADS			
				YL-BN	BN	SL-RD	BN-BK
6 BUTTON SET	5			M	M	M	X
	4	1		M	M	M	SG
	3	2		M	M	SG	X
	2			M	X	SG	X
	4	1	2	M	X	5H	SG
	4	1	3	X	X	5H	SG

Figure 7: Circuit Label, Model 567 Type 42 (Sheet 1 of 2)

TCI Library: www.telephonecollectors.info

183525-101

567**( )42/46 TYPE TELEPHONE CIRCUIT

TEL CODE	KEY FEATURES	COLOR OF MOUNTING CORD CONDUCTORS TO TERMINALS ON KEY AND LAMP TERMINAL STRIP (NOTE 9)																								
567**( )	SEE NOTE 5	BL-WH	WH-BL	OR-WH	WH-OR	GN-WH	WH-GN	BN-WH	WH-BN	SL-WH	WH-SL	BL-RD	RD-BL	OR-RD	RD-OR	GN-RD	RD-GN	BN-RD	RD-BN	RD-SL	SL-RD	RD-SL	BL-BK	BK-BL	OR-BK	BK-OR	GN-BK
42/46	HPPP S P S P S	1R	1T	1B	1H	1L	LG	2R	2T	DD*	2H	L2	LG	3R	3T	DD*	3H	L3	LG	4R	4T	DD*	4H	L4	LG	5R	

COLOR OF MOUNTING CORD CONDUCTORS TO TERMINALS ON KEY AND LAMP TERMINAL STRIP (NOTE 9)																								
BK-GN	BN-BK	BK-BN	SL-BK	BK-SL	BL-VI	VI-BL	OR-VI	VI-OR	GN-YL	YL-GN			BN-VI	VI-BN	GN-VI	VI-GN	YL-BN	SL-VI	VI-SL	VI-SL	BN-YL	SL-YL	YL-SL	BL-YL	YL-BL
5T	DD*	5H	L5	LG	ER	ET	EB	EH	DD*	DD*	3	4	7	8	9	RR	L2	LI	N	SG	RR	A	5	6

TERMINALS ON NETWORK

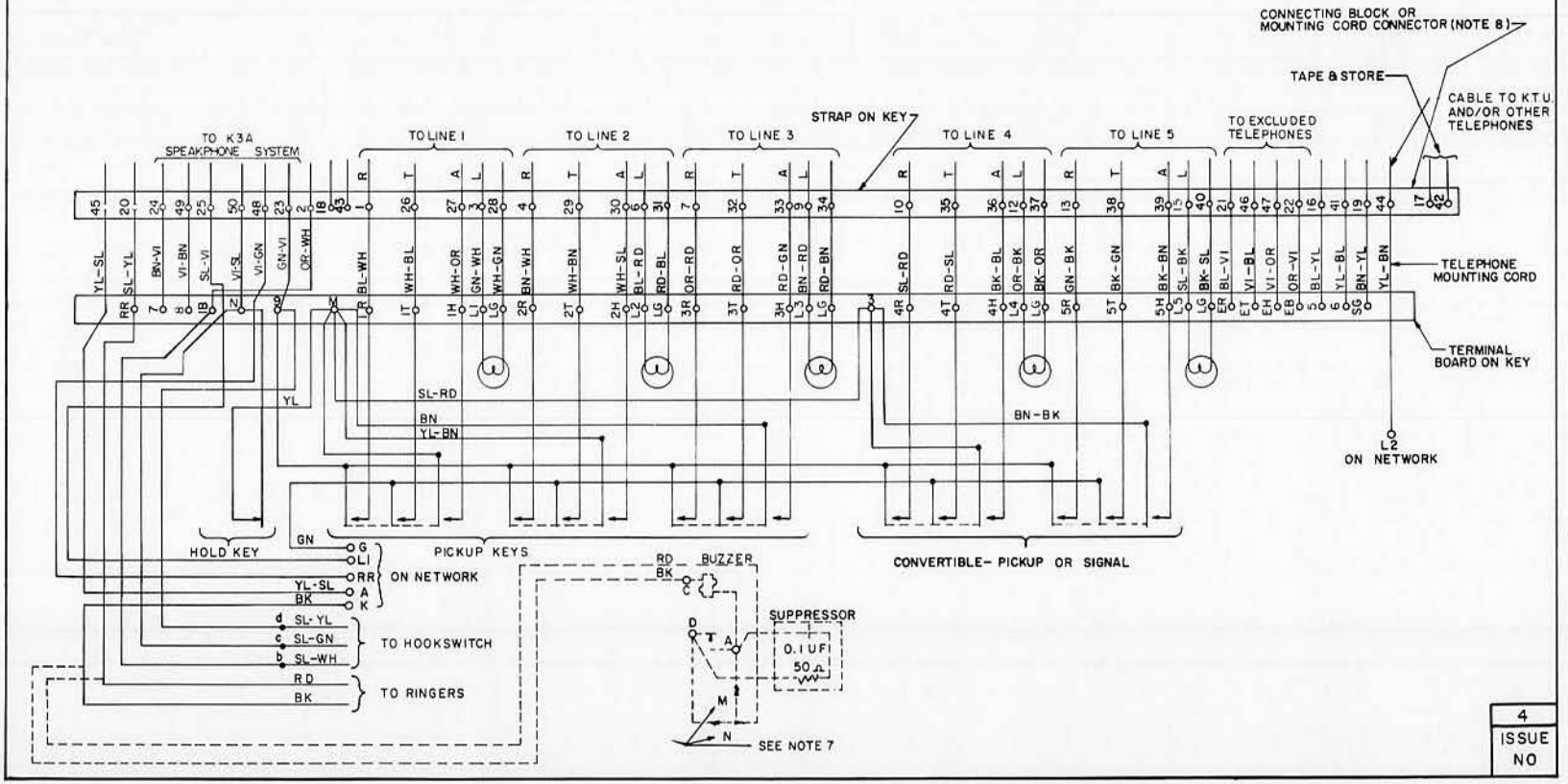

Figure 7: Circuit Label, Model 567 Type 42 (Sheet 2 of 2)

TCI Library: www.telephonecollectors.info

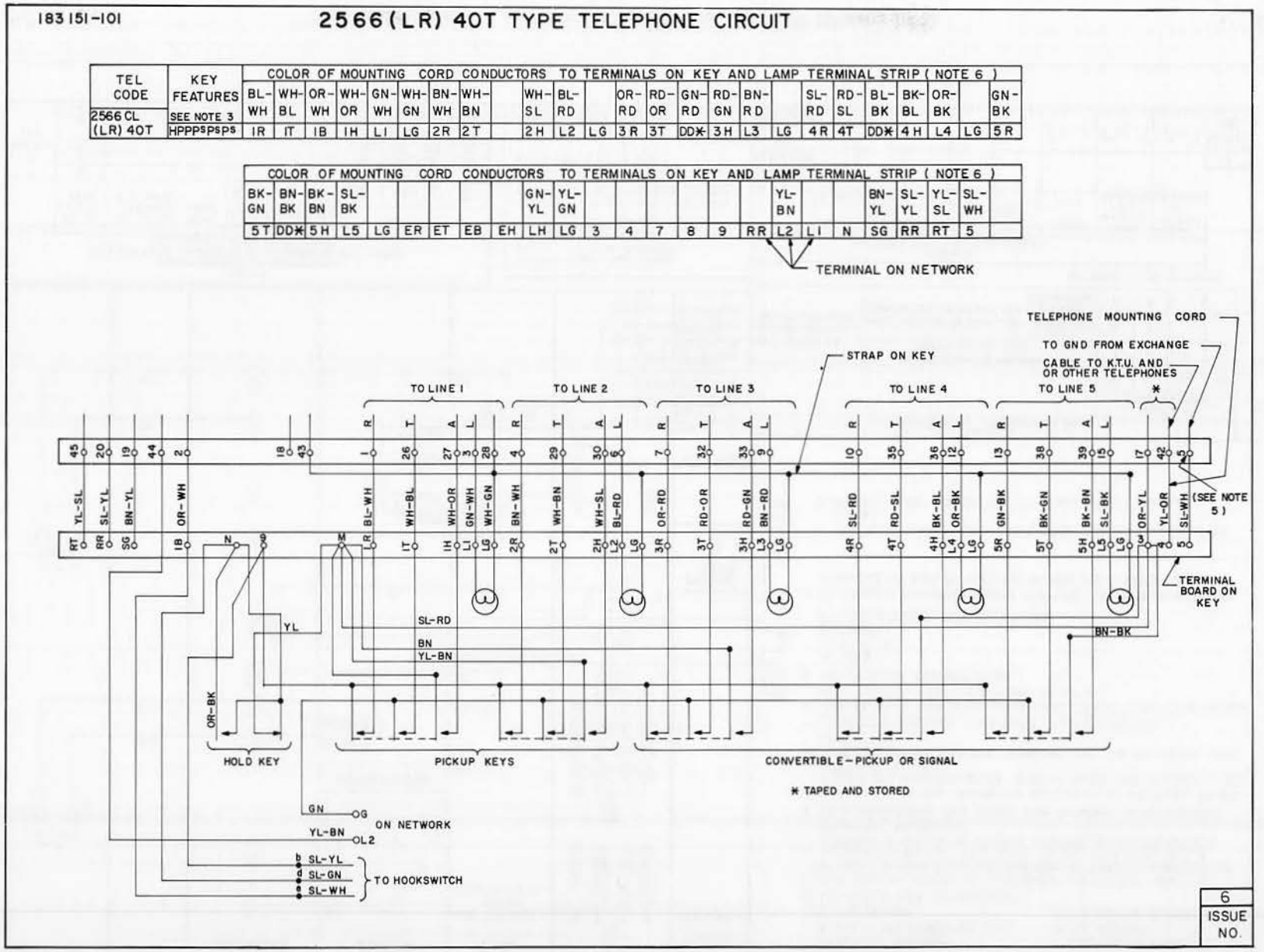

Figure 9: Circuit Label, Model 2566 Type 40T (Sheet 2 of 2)

TCI Library: www.telephonecollectors.info

6-BUTTON, PUSHBUTTON DIAL, KEY TELEPHONES

GENERAL DESCRIPTION

CONTENTS PAGE

1. GENERAL DESCRIPTION 1
MODEL 2564**( ) 40 3
MODEL 2564**( ) 41 3
MODEL 2565**( ) 40 3
MODEL 2565**( ) 41 3
MODEL 2565**( ) 42 3
MODEL 2565**( ) 46 3
MODEL 2566**( ) 40 4
MODEL 2566**( ) 41 4
MODEL 2567**( ) 40 4
MODEL 2567**( ) 41 4
MODEL 2567**( ) 42 4
MODEL 2567**( ) 46 4
2. INSTALLATION 4
3. MAINTENANCE 4
4. PUSHBUTTON KEY CONVERSIONS . 4
5. BUZZER INSTALLATION 6
6. BIASED RINGER WIRING 6
7. BUSY LAMP CONNECTIONS 8
8. CONNECT 174B CALL ANNOUNCER TO 6-BUTTON TELEPHONES 9

1. GENERAL DESCRIPTION

1.01 This document covers the 6-button, pushbutton dial, key telephone. (See Figure 1.) A general description as well as information that is peculiar to 6-button, pushbutton dial, key telephones is included.

AW 82-351
Figure 1: 6-Button, Pushbutton Dial, Key Telephone

1.02 This section supersedes all previous documents covering a general description of 6-button, pushbutton dial, key telephones. For additional information, refer to Section 50-565-104, Replacement Parts and to Section 50-565-105, Circuit Labels. For information on installation, maintenance, and components or equipment, consult related documents of the ITT Telephone Apparatus Practices Manual.

1.03 The Models 2564/2565, 2566/2567 key telephones are 6-button, pushbutton dial, anti-sidetone type units that operate efficiently over a wide range of loop resistances and line impedances. They are designed to be used with key telephone systems such as the ITT 1A2 System where several telephones have access to the same lines, CO trunks, or intercom lines.

1.04 The Models 2564/2565, 2566/2567 key telephones are identified by a code number stamped in ink on the bottom of the base plate. Refer to ordering information in Table A for an explanation of each code number. The Model 2564 type 40 telephone is the standard 6-button, pushbutton dial, desk type, key telephone. The Model 2565 type 40 telephone is similar to the Model 2564 type 40 with the addition of an exclusion switch. The Model 2566 type 40 telephone is similar to the

TCI Library: www.telephonecollectors.info

TABLE A

ORDERING INFORMATION – TELEPHONES

CODE NUMBERS

TELEPHONE CODE NUMBERS ARE FORMED IN SIX STEPS AS FOLLOWS:

2565 15 O BA 40 M

(1) Type of Instrument (See Part 1)
(2) Color (See Part 2)
(3) Version (See Part 3)
(4) Ringer (See Part 4)
(5) Special Feature (See Part 5)
(6) Dial (See Part 6)

PART 1 TYPE OF INSTRUMENT

CODE	DESCRIPTION	COLOR OFFERED	VERSION OFFERED	RINGER OFFERED	FEATURE OFFERED	DIAL OFFERED
2564	6-Button Pushbutton Dial	00, 05, 09, 13, 15, 44, and 45 (Available On All Models)	O	BA, LR	40, 41	M, R
2564	6-Button Pushbutton Dial		O	LR	40, 41	T
2565	6-Button Pushbutton Dial W/Exclusion		O	BA, LR	40, 41, 42, 46	M, R
2566	6-Button Pushbutton Dial W/Hookswitch Restoration		O	BA, LR	40, 41	M
2566	6-Button Pushbutton Dial W/Hookswitch Restoration		O	LR	40	T
2567	6-Button Pushbutton Dial W/Exclusion & Hookswitch Restoration		O	BA, LR	40, 41, 42, 46	M, R

REFER TO INDIVIDUAL UNIT DESCRIPTION FOR COMPLETE DESCRIPTION OF FEATURE COMBINATIONS

PART 2 COLORS		PART 3 VERSIONS		PART 4 RINGERS		PART 5 SPECIAL FEATURES		PART 6 DIALS	
CODE	COLORS	CODE	VERSIONS	CODE	RINGERS	CODE	SPECIAL FEATURES	CODE	DIAL
00	Black	O	Conventional	LR	Less Ringer	40	No Special Feature	M	Metropolitan (Letters & Numerals)
05	Moss Green								
09	Ivory			BA	Straight Line	41	40 Combined with Push-button for Grounding	R	Regular (Numerals Only)
13	Beige								
15	White					42	40 Combined with "Handsfree" Operation		
44	Light Ash								
45	Cocoa Brown					46	42 Combined with Push-button for Grounding	T	Tel-Pulse (Metro Dial Less Ringer Only)

AW 82-71

TCI Library: www.telephonecollectors.info

Model 2564 type 40 with the addition of the hookswitch restoration feature. The Model 2567 type 40 telephone is similar to the Model 2565 type 40 with the addition of the hookswitch restoration feature. A description of these telephones and the features available on each is given in the following paragraphs. All models are equipped with a mounting cord terminated in an Amphenol-type plug.

1.05 Five pushbutton keys on the telephone are used for line, trunk, or intercom selection. The red key on the far left is a hold button and allows any selected line or trunk to be placed in a hold position. All remaining keys may be used as line keys. The two keys on the right may be wired as either intercom lines or signal keys.

1.06 A signal lamp beneath each of the five line keys indicates status of the associated line. (See Table B.)

TABLE B

LINE KEY SIGNALS

CONDITION	LAMP INDICATION
Idle	Lamp extinguished
Busy	Lamp Lit
Hold	Lamp Winking
Call Incoming	Lamp Flashing

AW 81-96

1.07 Variations in Models 2564/2565, 2566/2567 are briefly described below. Circuit label drawings for these models are shown in Section 50-565-105.

MODEL 2564( ) 40**

1.08 The Model 2564**( ) 40 is a standard 6-button, pushbutton dial, desk type, key telephone that can be modified to accept various features. It is equipped with a 34-conductor mounting cord fitted with a 50-pin (25-pair) male connector.

MODEL 2564( ) 41**

1.09 The Model 2564**( ) 41 is identical to the Model 2564**( ) 40 with the addition of a grounding pushbutton switch, required in some PABX applications for transferring calls, originating calls during a power failure, and other special functions.

MODEL 2565( ) 40**

1.10 The Model 2565**( ) 40 is a standard 6-button, pushbutton dial, desk type, key telephone that can be modified to accept various features. It is equipped with a manual exclusion switch in the left-hand cradle plunger. Lifting the plunger disconnects any other telephone on one of the lines for confidential conversations. This model is equipped with a 42-conductor mounting cord fitted with a 50-pin (25-pair) male connector.

MODEL 2565( ) 41**

1.11 The Model 2565**( ) 41 is identical to the Model 2565**( ) 40 with the addition of a grounding pushbutton switch, required in some PABX applications for transferring calls, originating calls during a power failure, and other special functions.

MODEL 2565( ) 42**

1.12 The Model 2565**( ) 42 provides for the addition of an external handsfree speaker arrangement. It includes an additional set of contacts in the dial to disconnect the handsfree speaker during dialing and an additional set of contacts in the hookswitch assembly for on/off control of the handsfree equipment. This model is also equipped with an exclusion plunger but does not have an exclusion switch. The number 79971 exclusion switch can be added. The Model 2565**( ) 42 is equipped with a 50-conductor mounting cord fitted with a 50-pin (25-pair) male connector.

MODEL 2565( ) 46**

1.13 The Model 2565**( ) 46 is the same as the Model 2565**( ) 42 with the addition of a grounding pushbutton switch, required in some PABX application for transferring calls, originating calls during a power failure, and other special functions. This grounding pushbutton switch has normally open contacts.

TCI Library: www.telephonecollectors.info

MODEL 2566( ) 40**

1.14 The Model 2566**( ) 40 is the same as the Model 2564**( ) 40 with the addition of a hookswitch restoration feature. This hookswitch restoration feature will release any operated line key when the cradle plunger is pressed. Therefore, a method other than flashing the hookswitch must be used to signal the operator. An operator recall button containing normally closed contacts is installed for this purpose. This operator recall button (located just forward of the handset cradle) is also used to obtain dial tone when momentarily pressed.

MODEL 2566( ) 41**

1.15 The Model 2566**( ) 41 is the same as the Model 2566**( ) 40 with the addition of a grounding pushbutton switch, required in some PABX applications for transferring calls, originating calls during a power failure, and other special functions.

MODEL 2567( ) 40**

1.16 The Model 2567**( ) 40 is the same as the Model 2565**( ) 40 with the addition of a hookswitch restoration feature. This hookswitch restoration feature will release any operated line key when the cradle plunger is pressed. Therefore, a method other than flashing the hookswitch must be used to signal the operator. An operator recall button containing normally closed contacts is installed for this purpose. This operator recall button (located just forward of the handset cradle) is also used to obtain dial tone when momentarily pressed.

MODEL 2567( ) 41**

1.17 The Model 2567**( ) 41 is the same as the Model 2567**( ) 40 with the addition of a grounding pushbutton switch, required in some PABX applications for transferring calls, originating calls during a power failure, and other special functions.

MODEL 2567( ) 42**

1.18 The Model 2567**( ) 42 is the same as the Model 2565**( ) 42 with the addition of a hookswitch restoration feature that restores any operated line button when the hookswitch is pressed. An operator recall button is provided for operator signaling as in the Model 2567**( )40.

MODEL 2567( ) 46**

1.19 The Model 2567**( ) 46 is the same as the Model 2567**( ) 42 with the addition of a grounding pushbutton switch, required in some PABX applications for transferring calls, originating calls during a power failure, and other special functions. This grounding pushbutton has normally open contacts.

2. INSTALLATION

2.01 Since these telephones are equipped with a plug-terminated mounting cord, installation consists of inserting the plug into the station connecting block and pressing to engage. For specific wiring installation information, refer to the appropriate circuit label in Section 50-565-105 and to Table C of this document. For general installation information and installation of repair parts, refer to the particular section of the ITT Telephone Apparatus Practices Manual for the required part.

3. MAINTENANCE

3.01 For general maintenance information, refer to the general maintenance section of the ITT Telephone Apparatus Practices Manual. For a pictorial view and parts list, refer to Section 50-565-104.

4. PUSHBUTTON KEY CONVERSIONS

4.01 Pushbutton keys 4 and 5 (from the left) may be converted from line to signaling keys by turning the slot-headed pin about six revolutions CCW from the plunger, then changing key leads as shown in Table D. Table D also shows wiring for intercom using line key number 5 as a common signaling key.

TCI Library: www.telephonecollectors.info

TABLE C

CONNECTION CHART FOR 2564 AND 2565 TELEPHONE SETS

CIRCUIT FEATURE		TERMINAL IN SET	MOUNTING CORDS			CONNECTOR PIN NUMBER	CONNECTING CABLE
			50-Cond.	42-Cond.	34-Cond.		
LINE	LEAD DESIG.	636 KEY	2565/42 PHONES	2565/40 PHONES	2564/40 PHONES	AMPHENOL CONNECTOR	50-Cond.
1	T	1T	WH-BL	WH-BL	WH-BL	26	WH-BL
	R	1R	BL-WH	BL-WH	BL-WH	1	BL-WH
	A	1H	WH-OR	WH-OR	WH-OR	27	WH-OR
	A1	1B	OR-WH	OR-WH	OR-WH	2	OR-WH
	LG	LG	WH-GN	WH-GN	WH-GN	28	WH-GN
	L	L1	GN-WH	GN-WH	GN-WH	3	GN-WH
2	T	2T	WH-BN	WH-BN	WH-BN	29	WH-BN
	R	2R	BN-WH	BN-WH	BN-WH	4	BN-WH
	A	2H	WH-SL	WH-SL	WH-SL	30	WH-SL
	A1	---	SL-WH	SL-WH	SL-WH	5	SL-WH
	LG	LG	RD-BL	---	---	31	RD-BL
	L	L2	BL-RD	BL-RD	BL-RD	6	BL-RD
3	T	3T	RD-OR	RD-OR	RD-OR	32	RD-OR
	R	3R	OR-RD	OR-RD	OR-RD	7	OR-RD
	A	3H	RD-GN	RD-GN	RD-GN	33	RD-GN
	A1	---	GN-RD	GN-RD	GN-RD	8	GN-RD
	LG	LG	RD-BN	RD-BN	RD-BN	34	RD-BN
	L	L3	BN-RD	BN-RD	BN-RD	9	BN-RD
4	T	4T	RD-SL	RD-SL	RD-SL	35	RD-SL
	R	4R	SL-RD	SL-RD	SL-RD	10	SL-RD
	A	4H	BK-BL	BK-BL	BK-BL	36	BK-BL
	A1	---	BL-BK	BL-BK	BL-BK	11	BL-BK
	LG	LG	BK-OR	---	---	37	BK-OR
	L	L4	OR-BK	OR-BK	OR-BK	12	OR-BK
5	T	5T	BK-GN	BK-GN	BK-GN	38	BK-GN
	R	5R	GN-BK	GN-BK	GN-BK	13	GN-BK
	A	5H	BK-BN	BK-BN	BK-BN	39	BK-BN
	A1	---	BN-BK	BN-BK	BN-BK	14	BN-BK
	LG	LG	BK-SL	---	---	40	BK-SL
	L	L5	SL-BK	SL-BK	SL-BK	15	SL-BK
AUX. SIGS.		2	YL-BL	YL-BL	---	41	YL-BL
		---	BL-YL	BL-YL	---	16	BL-YL
		4	YL-OR	---	YL-OR	42	YL-OR
		3	OR-YL	---	OR-YL	17	OR-YL
HOLD LAMP		LG	YL-GN	---	YL-GN	43	YL-GN
		LH	GN-YL	---	GN-YL	18	GN-YL
BZ LP		1	YL-BN	YL-BN	YL-BN	44	YL-BN
PB SIG		SG	BN-YL	BN-YL	BN-YL	19	BN-YL
B-B1		RT	YL-SL	YL-SL	YL-SL	45	YL-SL
R-R1		RR	SL-YL	SL-YL	SL-YL	20	SL-YL
EXCL. CKT.	T	ET	VI-BL	VI-BL	---	46	VI-BL
	R	ER	BL-VI	BL-VI	---	21	BL-VI
	A	EH	VI-OR	VI-OR	---	47	VI-OR
	A1	EB	OR-VI	OR-VI	---	22	OR-VI
SPEAKER PHONE	T1	G	VI-GN	VI-GN	---	48	VI-GN
	R1	9	GN-VI	GN-VI	---	23	GN-VI
	P4	8	VI-BN	VI-BN	---	49	VI-BN
	P3	7	BN-VI	BN-VI	---	24	BN-VI
	AG	N	VI-SL	VI-SL	---	50	VI-SL
	LK	L1	SL-VI	SL-VI	---	25	SL-VI

AW 82-246

TCI Library: www.telephonecollectors.info

TABLE D

LINE/SIGNAL KEY CONVERSIONS FOR 6-BUTTON SETS

NO. OF LINE KEYS	NO. OF SIG. KEYS CONVERTED FROM LINE KEYS	NO. OF PRIVATE & INTERCOM LINES WITH COMMON SIG. KEY	KEY LEADS			
			YL-BN	BN	SL-RD	BN-BK
5			M	M	M	X
4	1		M	M	M	SG
3	2		M	M	SG	X
4	1	2	M	X	5H	SG
4	1	3	X	X	5H	SG

AW-81-95

5. BUZZER INSTALLATION

5.01 When a key is converted to signaling mode, a buzzer may be installed as the signaling device of the telephone to be signaled. The buzzer may be installed on the dial mounting bracket inside the telephone or mounted externally. Buzzer installation for signaling between two telephones (using buzzers operating at 18 VAC, 60 Hz) should be as follows. (Refer to Figure 2.)

(a) Connect the signal buzzer leads to terminal 3 and terminal 4 of the telephone terminal board. (Do this for each telephone to be signaled.)

(b) Move the BN-BK lead from terminal X to terminal SG of the telephone terminal board. (This is for each telephone that will be initiating a signal.)

(c) Cross-connect from the YL-OR lead at the station block of the signaled telephone to the BK-BN lead at the station block of the signaling telephone.

(d) Cross-connect from the BK-BN lead at the station block of the signaled telephone to the YL-OR lead at the station block of the signaling telephone.

(e) Cross-connect from the power supply and ground to the OR-YL lead and BN-YL lead respectively at the station block for each telephone.

5.02 A buzzer may also be installed to replace a ringer. This can be accomplished in the following manner. Refer to the circuit diagram in Figure 3.

(a) Connect the BK lead from the buzzer connection C to terminal RT on the key terminal board of the telephone.

(b) Connect the RD lead from the buzzer connection A to terminal RR on the key terminal board of the telephone.

6. BIASED RINGER WIRING

6.01 The biased ringer option allows for selective ringing of only those lines which are designated as such and gives an added convenience feature to the system. (Lines can also be selectively "common audibled" at the key system so one ringer can serve from one to five lines if desired.) Wiring for biased ringing should be as follows. Refer to the circuit diagram in Figure 4.

(a) Connect the BK lead from the ringer to the T terminal of the selected line on the key terminal board.

(b) Connect the SL lead from the ringer to the K terminal of the network.

(c) Connect the SL-RD lead from the ringer to the A terminal of the network.

TCI Library: www.telephonecollectors.info

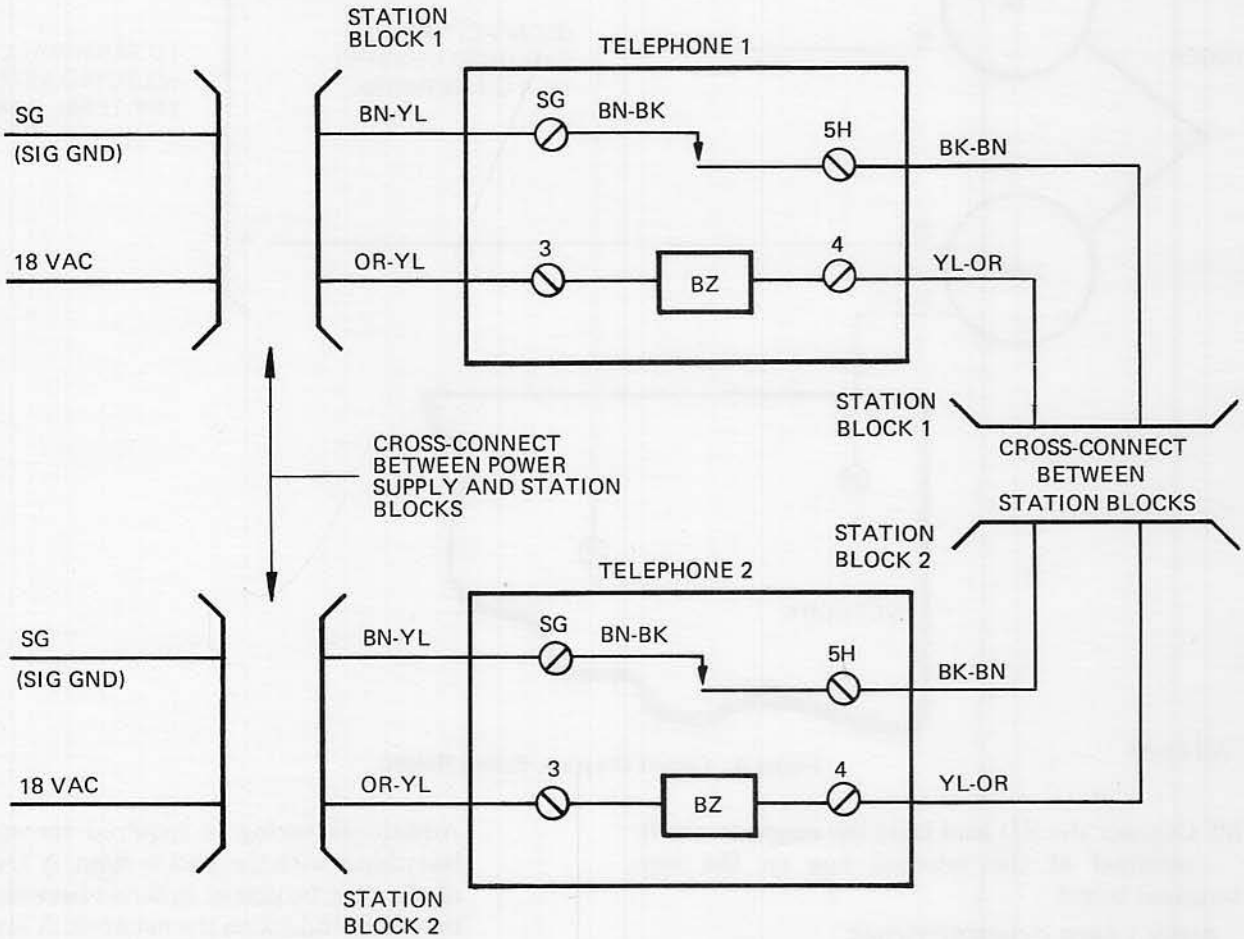

NOTE: MOVE THE BN-BK LEAD FROM TERMINAL X TO TERMINAL SG INSIDE EACH TELEPHONE.

AW 81-151

Figure 2: Circuit Diagram For Signal Buzzer

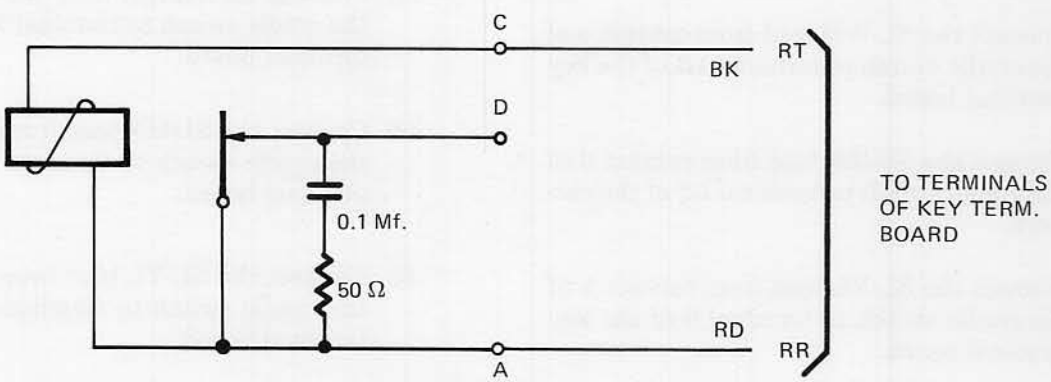

AW 81-97

NOTE: THIS ARRANGEMENT IS FOR 105 VAC

Figure 3: Circuit Diagram for Buzzer Replacing Ringer

TCI Library: www.telephonecollectors.info

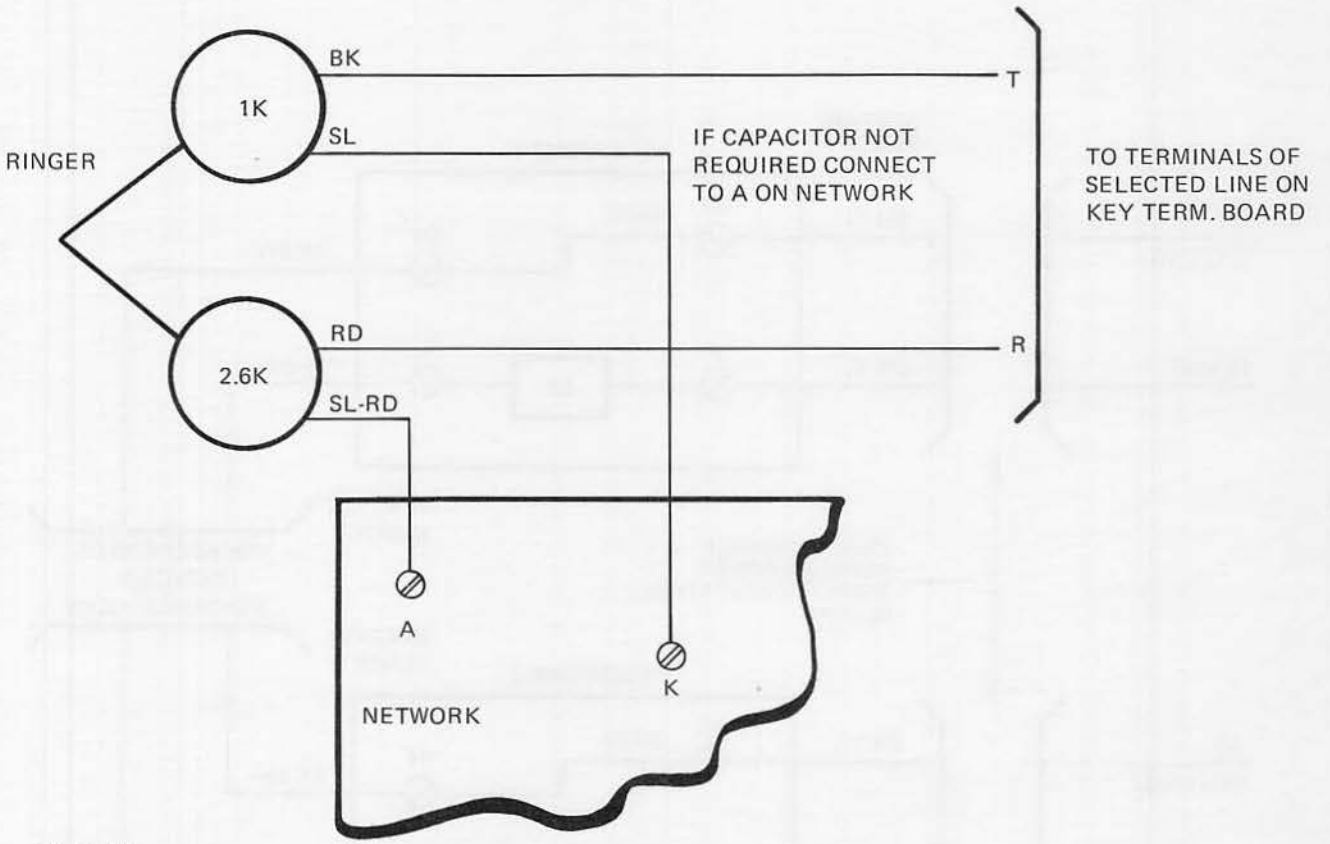

Figure 4: Circuit Diagram, Biased Ringer

(d) Connect the RD lead from the ringer to the R terminal of the selected line on the key terminal board.

7. BUSY LAMP CONNECTIONS

7.01 Busy lamp connections are dependent on the type of key system being used. Connections according to the 1A2 systems should be as follows. Refer to the circuit diagram in Figure 5.

(a) With station busy lamp

(1) Connect the SL-WH lead from contact e of the cradle switch to terminal 1B of the key terminal board.

(2) Connect the SL-GN lead from contact d of the cradle switch to terminal L2 of the network.

(3) Connect the SL-YL lead from contact b of the cradle switch to terminal 9 of the key terminal board.

(4) The YL lead from the hold key is connected to terminal M of the key terminal board.

Additional wiring is required for station busy lamp with the 1A2 system. A 1N4004 diode must be placed in series between terminals G and L2 on the network. A strap is placed between G on the network and N on the key terminal board. A 1N4004 diode is also placed between terminals L2 and L1 on the network.

(b) No station busy lamp

(1) Connect the SL-WH lead from contact e of the cradle switch to terminal 1B of the key terminal board.

(2) Connect the SL-GN lead from contact d of the cradle switch to terminal N of the key terminal board.

(3) Connect the SL-YL lead from contact b of the cradle switch to terminal 9 of the key terminal board.

(4) The YL lead from the hold key is connected to terminal M of the key terminal board.

TCI Library: www.telephonecollectors.info

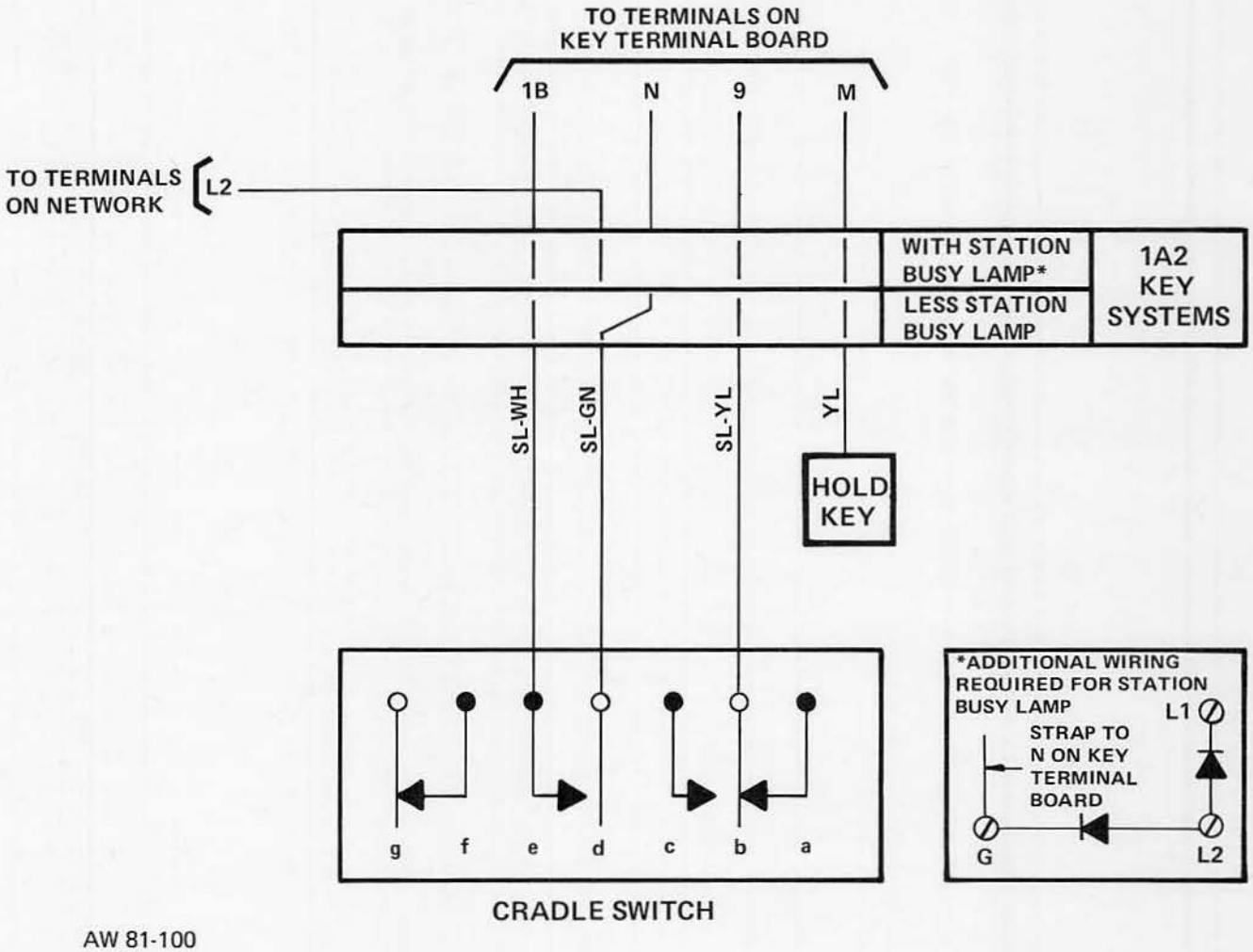

Figure 5: Circuit Diagram, Busy Lamp

8. CONNECT 174B CALL ANNOUNCER TO 6-BUTTON TELEPHONES

8.01 A 174B call announcer is used to provide tone-and-voice signaling to an intercom station and handsfree answerback from an intercom station. The 174B call announcer connects to 6-button telephones as follows:

(a) Connect the BK (-24 VDC) lead of the call announcer together with the VI-BL lead of the telephone to ET of the terminal board.

(b) Connect the YL (GND) lead of the call announcer together with the YL-OR lead of the telephone to terminal 4 of the terminal board.

(c) Connect the RD (CA RST) lead of the call announcer together with the VI-BN lead of the telephone to terminal 8 of the terminal board.

(d) Connect the GN (CA RT) lead of the call announcer together with the VI-GN lead of the telephone to terminal 1 of the terminal board. (The VI-GN lead will have to be moved from RR on the network.)

TCI Library: www.telephonecollectors.info

6-BUTTON, PUSHBUTTON DIAL, KEY TELEPHONES

REPLACEMENT PARTS

1. GENERAL

1.01 This document covers the 6-button, pushbutton dial, key telephone. (See Figure 1.) An exploded view drawing of the telephone with the major assembly groups (see Figure 2) and a replacement parts list (Table A) are included.

1.02 This section is reissued to reflect changes in the 6-button, pushbutton dial, key telephone and to correct errors in the previous issue. Whenever this section is reissued, reason for reissue will be listed in this paragraph.

1.03 For additional information on description and installation of the telephones, refer to Section 50-565-103. The circuit labels appear in Section 50-565-105. Related documents of the ITT Telephone Apparatus Practices Manual provide information on components.

1.04 The Models 2564/2565, 2566/2567 key telephones are 6-button, pushbutton dial, anti-sidetone type units that operate efficiently over a wide range of loop resistances and line impedances. They are designed to be used with key systems such as the ITT 1A2 system where several telephones have access to the same lines, CO trunks, or intercom lines.

1.05 The Models 2564/2565, 2566/2567 key telephones are identified by a code number stamped in ink on the bottom of the base plate. Refer to Section 50-565-103 of the ITT Telephone Apparatus Practices Manual for ordering information of complete telephones and for an explanation of each code number.

1.06 The Model 2564 type 40 telephone is the standard 6-button, pushbutton dial, desk type, key telephone. The Model 2565 type 40 telephone is similar to the Model 2564 type 40 with the addition of an exclusion switch. The Model 2566 type 40 telephone is similar to the Model 2564 type 40 with the addition of the hookswitch restoration feature. The Model 2567 type 40 telephone is similiar to the Model 2565 type 40 with the addition of the hookswitch restoration feature.

AW 82-351

Figure 1: 6-Button, Pushbutton Dial, Key Telephone

TCI Library: www.telephonecollectors.info

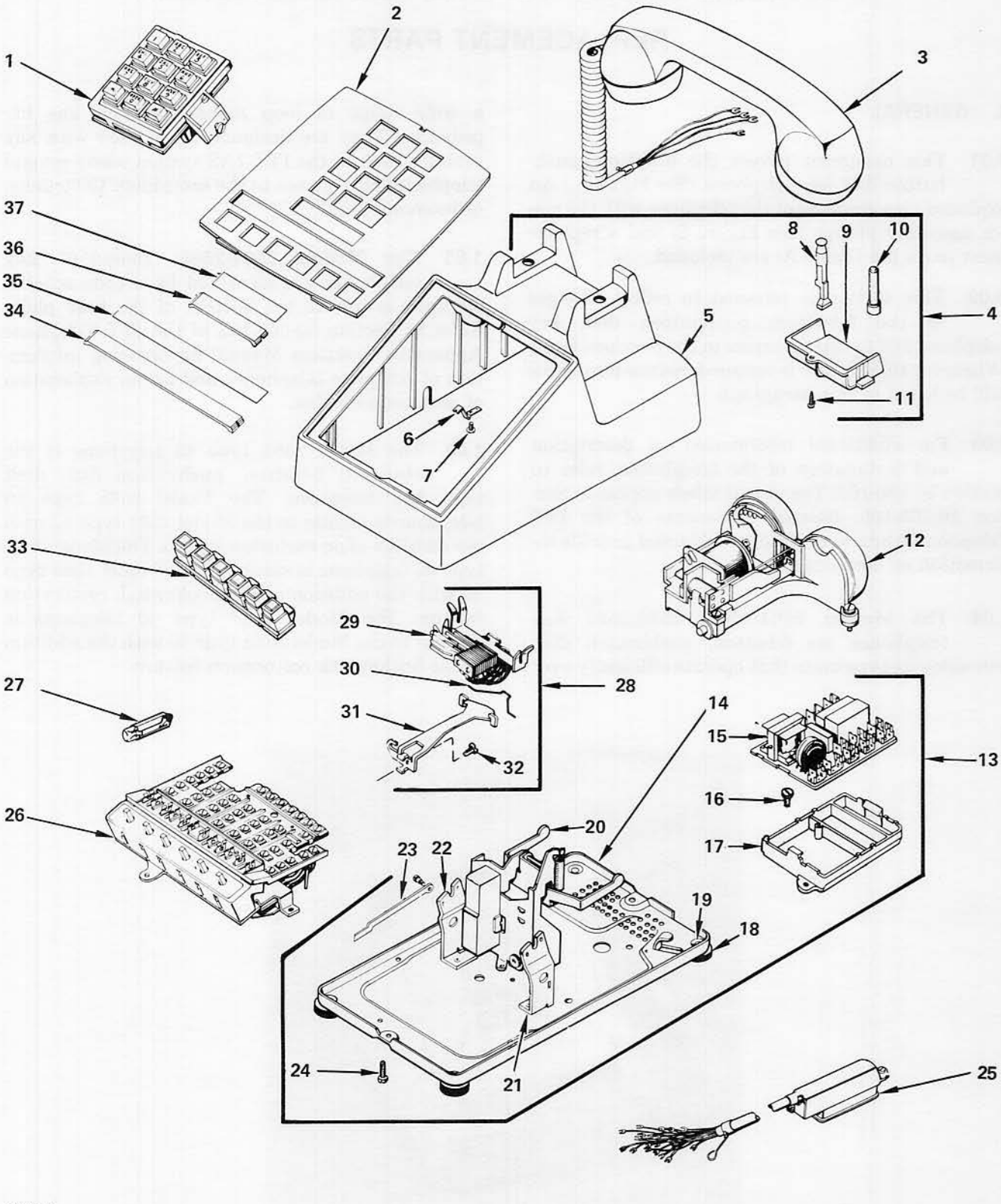

Figure 2: 6-Button, Pushbutton Dial, Key Telephone, Exploded View

TCI Library: www.telephonecollectors.info

TABLE A

REPLACEMENT PARTS LIST

INDEX NO	PART NUMBER	DESCRIPTION	QUANTITY USED											
		6-Button, Pushbutton Dial, Desk Telephone	2564/40	2564/41	2565/40	2565/41	2565/42	2565/46	2566/40	2566/41	2567/40	2567/41	2567/42	2567/46
1	004200-0PG	Dial Assembly, Pushbutton Digital, Metropolitan (Letters and Numerals)[1, 3]	1	1	1	1	–	–	1	1	1	1	–	–
1	004200-0PD	Dial Assembly, Pushbutton Digital, Regular (Numerals Only)[1, 4]	1	1	1	1	–	–	1	1	1	1	–	–
1	003200-0PD	Dial Assembly, Pushbutton Digital, Regular (Numerals Only)[1, 2]	1	1	1	1	–	–	1	1	1	1	–	–
1	003200-0PG	Dial Assembly, Pushbutton Digital, Metropolitan (Letters and Numerals)[1, 2]	1	1	1	1	–	–	1	1	1	1	–	–
1	004600-0PG	Dial Assembly, Pushbutton Digital, Handsfree, Metropolitan (Letters and Numerals)[1, 5]	–	–	–	–	1	1	–	–	–	–	1	1
1	004600-0PD	Dial Assembly, Pushbutton Digital, Handsfree, Regular (Numerals Only)[1, 6]	–	–	–	–	1	1	–	–	–	–	1	1
1	003600-0PG	Dial Assembly, Pushbutton Digital, Handsfree, Metropolitan (Letters and Numerals)[1, 2]	–	–	–	–	1	1	–	–	–	–	1	1
1	003600-0PD	Dial Assembly, Pushbutton Digital, Handsfree, Regular (Numerals Only)[1, 2]	–	–	–	–	1	1	–	–	–	–	1	1
1	006300-0PG	Dial Assembly, Pushbutton, Tel-Pulse, Metropolitan (Letters and Numerals)[1, 7]	1	–	–	–	–	–	1	–	–	–	–	–
2	180148-0**	Faceplate	1	–	1	–	1	–	1	–	1	–	1	–
2	180622-0**	Faceplate	–	1	–	1	–	1	–	1	–	1	–	1
3	0065**-0C2	Handset Assembly[1]	1	1	1	1	1	1	1	1	1	1	1	1
4	181455-0**	Housing and Plunger Assembly	1	1	–	–	–	–	–	–	–	–	–	–
4	181456-0**	Housing and Plunger Assembly	–	–	1	1	1	1	–	–	–	–	–	–
4	180158-0**	Housing and Plunger Assembly	–	–	–	–	–	–	1	1	–	–	–	–
4	180607-0**	Housing and Plunger Assembly	–	–	–	–	–	–	–	–	1	1	1	1
5	087510-0**	Housing	1	1	1	1	1	1	–	–	–	–	–	–
5	180156-0**	Housing	–	–	–	–	–	–	1	1	1	1	1	1
6	086143-101	Clip, Faceplate	1	1	1	1	1	1	1	1	1	1	1	1
7	181289-101	Screw, Faceplate Clip	1	1	1	1	1	1	1	1	1	1	1	1
8	079982-102	Plunger, Exclusion	–	–	1	1	1	1	–	–	1	1	1	1
9	079097-0**	Plunger, Retainer	1	1	1	1	1	1	1	1	1	1	1	1
10	079101-102	Plunger, Cradle Switch	2	2	1	1	1	1	2	2	1	1	1	1
11	075407-102	Screw, Plunger Retainer	1	1	1	1	1	1	1	1	1	1	1	1
12	000130-0BA	Ringer[1]	1	1	1	1	1	1	1	1	1	1	1	1

TCI Library: www.telephonecollectors.info

TABLE A

REPLACEMENT PARTS LIST (Cont)

INDEX NO	PART NUMBER	DESCRIPTION	QUANTITY USED											
		6-Button, Pushbutton Dial, Desk Telephone	2564/40	2564/41	2565/40	2565/41	2565/42	2565/46	2566/40	2566/41	2567/40	2567/41	2567/42	2567/46
13	079525-107	Base Assembly	1	1	1	1	–	–	–	–	–	–	–	–
13	079525-109	Base Assembly	–	–	–	–	1	1	–	–	–	–	–	–
13	079525-110	Base Assembly	–	–	–	–	–	–	1	1	1	1	–	–
13	079525-112	Base Assembly	–	–	–	–	–	–	–	–	–	–	1	1
14	079411-101	Plate, Base	1	1	1	1	1	1	1	1	1	1	1	1
15	181427-102	PC Network (#183070-102)[1]	1	1	1	1	1	1	1	1	1	1	1	1
16	096407-103	Screw, Network Mounting	1	1	1	1	1	1	1	1	1	1	1	1
17	182175-101	Spacer, Network	1	1	1	1	1	1	1	1	1	1	1	1
18	182337-101	Foot	4	4	4	4	4	4	4	4	4	4	4	4
19	082486-102	Rivet, Foot	4	4	4	4	4	4	4	4	4	4	4	4
20	079489-101	Cradle Switch Assembly[1]	1	1	1	1	–	–	–	–	–	–	–	–
20	079489-102	Cradle Switch Assembly[1]	–	–	–	–	–	–	1	1	1	1	–	–
20	079489-103	Cradle Switch Assembly[1]	–	–	–	–	1	1	–	–	–	–	–	–
20	079489-104	Cradle Switch Assembly[1]	–	–	–	–	–	–	–	–	–	–	1	1
	079490-101	Spring Nest Assembly (Not Shown)	1	1	1	1	–	–	1	1	1	1	–	–
	086406-101	Spring Nest Assembly (Not Shown)	–	–	–	–	1	1	–	–	–	–	1	1
	075307-104	Spring, Cradle Return (Not Shown)	1	1	1	1	1	1	1	1	1	1	1	1
	075308-101	Pin, Pivot (Not Shown)	1	1	1	1	1	1	1	1	1	1	1	1
	079491-101	Arm, Operating (Not Shown)	1	1	1	1	1	1	–	–	–	–	–	–
21	087511-101	Bracket, Dial (R.H.)	1	1	1	1	1	1	1	1	1	1	1	1
22	087511-102	Bracket, Dial (L.H.)	1	1	1	1	1	1	1	1	1	1	1	1
23	190167-101	Operating Link	–	–	–	–	–	–	1	1	1	1	1	1
24	075486-101	Screw, Cabinet Locking	2	2	2	2	2	2	2	2	2	2	2	2
25	184352-066	Cord, Mounting; 34-Conductor With Connector	1	1	–	–	–	–	1	1	–	–	–	–
25	184361-066	Cord, Mounting; 42-Conductor With Connector	–	–	1	1	–	–	–	–	1	1	–	–
25	184368-066	Cord, Mounting; 50-Conductor With Connector	–	–	–	–	1	1	–	–	–	–	1	1
26	000636-00A	Key Assembly	1	1	1	1	1	1	–	–	–	–	–	–
26	000636-00C	Key Assembly	–	–	–	–	–	–	1	1	1	1	1	1
27	000051-00A	Lamp	5	5	5	5	5	5	5	5	5	5	5	5
28	079971-101	Exclusion Switch Assembly	–	–	1	1	–	–	–	–	1	1	–	–
29	079970-101	Spring Assembly	–	–	1	1	–	–	–	–	1	1	–	–
30	079624-101	Retainer Spring	–	–	1	1	–	–	–	–	1	1	–	–
31	079605-101	Mounting Bracket	–	–	1	1	–	–	–	–	1	1	–	–
32	069020-103	Screw, B.H.M.	–	–	1	1	–	–	–	–	1	1	–	–

TCI Library: www.telephonecollectors.info

TABLE A

REPLACEMENT PARTS LIST (Cont)

INDEX NO	PART NUMBER	DESCRIPTION	QUANTITY USED											
		6-Button, Pushbutton Dial, Desk Telephone	**2564/40**	**2564/41**	**2565/40**	**2565/41**	**2565/42**	**2565/46**	**2566/40**	**2566/41**	**2567/40**	**2567/41**	**2567/42**	**2567/46**
33	087472-101	Plunger and Retainer Assembly (Key Strip)	1	1	1	1	1	1	1	1	1	1	1	1
	087470-102	Button, Red (Not Shown)	1	1	1	1	1	1	1	1	1	1	1	1
	087470-101	Button, Clear (Not Shown)	5	5	5	5	5	5	5	5	5	5	5	5
	087471-101	Strip (Not Shown)	1	1	1	1	1	1	1	1	1	1	1	1
	087469-101	Retainer (Not Shown)	1	1	1	1	1	1	1	1	1	1	1	1
34	088522-101	Retainer, Designation Card	1	1	1	1	1	1	1	1	1	1	1	1
35	082028-101	Card, Designation	1	1	1	1	1	1	1	1	1	1	1	1
36	087514-101	Retainer, Number Card	1	1	1	1	1	1	1	1	1	1	1	1
37	087513-101	Card, Number	1	1	1	1	1	1	1	1	1	1	1	1
37	087513-102	Card, Number, Strip of 6 (Not Shown)[8]	–	–	–	–	–	–	–	–	–	–	–	–
	181971-101	Pushbutton, Grounding (Not Shown)	–	1	–	1	–	1	–	1	–	1	–	1
	181973-101	Pushbutton, Operator Recall (Not Shown)	–	–	–	–	–	–	1	1	1	1	1	1

AW 84-113

NOTES:

** Substitute 2-Digit Color Code When Ordering.

1 Refer To Components Parts Section Of This Manual For Assembly Parts List.

2 Not Available With The Model 2564, 2565, 2566, And 2567 Telephones.

3 The 004200 0PG Dial Replaces The 003200 0PG Dial.

4 The 004200 0PD Dial replaces the 003200 0PD Dial.

5 The 004600 0PG Dial Replaces The 003600 0PG Dial.

6 The 004600 0PD Dial Replaces The 003600 0PD Dial.

7 These Products Have Been Discontinued, But Are Included To Provide A Source Of Information For Telephones Still In Service.

8 Must Be Ordered Separately.

TCI Library: www.telephonecollectors.info

6-BUTTON, PUSHBUTTON DIAL, KEY TELEPHONES

CIRCUIT LABELS

1. GENERAL

1.01 This document covers the 6-button, pushbutton dial, key telephones. (See Figure 1.) The circuit labels for the various models of 6-button, pushbutton dial, key telephones and the associated features available in each are included in this document. (See Table A.)

AW 86-341

Figure 1: 6-Button, Pushbutton Dial, Key Telephone

1.02 This section is reissued to provide the latest issue of circuit labels for the following 6-button, pushbutton dial, key telephones:

(a) Model 2564, Types 40M and 41M

(b) Model 2565, Types 40M, 41M, and 40R

(c) Model 2565, Types 42 and 46

(d) Model 2566, Types 40 and 41

(e) Model 2567, Types 40M and 41M

(f) Model 2567, Types 42 and 46

1.03 For additional information on description and installation of the telephones, refer to Section 50-565-103. A replacement parts list and an exploded-view drawing for the telephones are contained in Section 50-565-104. Related documents of the ITT Telephone Apparatus Practices Manual provide information on components.

1.04 The Models 2564/2565, 2566/2567 key telephones are identified by a code number stamped in ink on the bottom of the base plate. Refer to Section 50-565-103 of the ITT Telephone Apparatus Practices Manual for ordering information of complete telephones and an explanation of each code number.

1.05 The Models 2564/2565, 2566/2567 key telephones are 6-button, pushbutton dial, anti-sidetone type units that operate efficiently over a wide range of loop resistances and line impedances. They are designed to be used with key systems, such as the ITT 1A2 System, where several telephones have access to the same lines, CO trunks, or intercom lines.

1.06 The Model 2564 Type 40 telephone is the standard 6-button, pushbutton dial, desk type, key telephone. The Model 2565 Type 40 telephone is similar to the Model 2564 Type 40 with the addition of an exclusion switch. The Model 2566 Type 40 telephone is similar to the Model 2564 Type 40 with the addition of the hookswitch restoration feature. The Model 2567 Type 40 telephone is similar to the Model 2565 Type 40 with the addition of the hookswitch restoration feature.

TABLE A

LIST OF CIRCUIT LABELS

MODEL NO	TYPE NO	FIGURE NO
2564	40M, 41M	2
2564	40R, 41R	3
2564	40T	4
2565	40M, 41M, 40R	5
2565	42, 46	6
2565	41R	7
2566	40, 41	8
2566	40T	9
2567	40M, 41M	10
2567	40R, 41R	11
2567	42, 46	12

AW 86-336

TCI Library: www.telephonecollectors.info

186281-101

2564( )40,41 TYPE TELEPHONE CIRCUIT

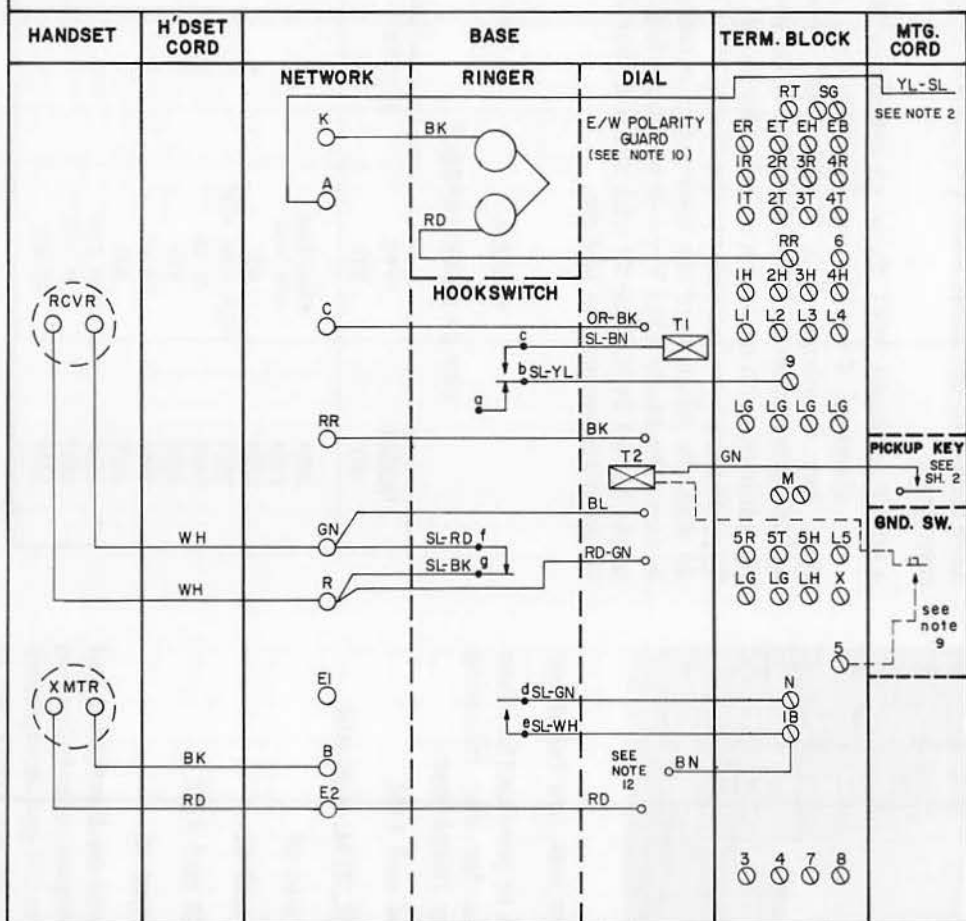

NOTES:

1. CONTACT SEQUENCE:
   REMOVING HANDSET
   A. de CLOSES BEFORE cb
   B. fg OPENS
   RESTORING HANDSET
   A. fg CLOSES
   B. cb OPENS BEFORE de
2. SEE TABLE FOR CONNECTIONS.
3. FOR RINGER CUT-OFF CONTROL BY CUSTOMER: BEND STOP NEXT TO DETENT ON RINGER VOLUME CONTROL SO THAT IT COMPLETELY CLEARS THE RIM OF THE RINGER FRAME. THIS PROVIDES A FURTHER POSITION ON VOLUME CONTROL WHICH PREVENTS ARMATURE MOVEMENTS.
4. KEY FEATURE DESIGNATIONS:
   H- HOLD
   P- PICK-UP
   S- SIGNAL
   P^S- CONVERTIBLE, PICK-UP OR SIGNAL
5. DD * CONDUCTORS ARE TAPED AND STORED IN TELEPHONE.
6. PROVIDE "M" WIRING WHEN THE BUZZER IS TO OPERATE ON 60 CYCLES AC, AND PROVIDE "N" WIRING WHEN THE BUZZER IS TO OPERATE ON DC.
7. NUMBERS SHOWN INDICATE TERMINAL NO. ON MOUNTING CORD CONNECTOR.
8. CONDUCTOR COLORS: BODY FIRST, TRACER SECOND.
9. BROKEN LINE INDICATES GROUNDING CIRCUIT FOR TELEPHONES WITH 34 OR 41 FEATURE.
10. TO DISABLE THE POLARITY GUARD FEATURE CUT STRAP-WIRE ON COMPONENT SIDE OF DIAL P.C. BOARD. (SEE SHEET 2).
11. THE BUSY LAMP LEAD (SEPERATE WIRE) IS CONNECTED TO L1.
12. BROWN LEAD CONNECTED TO DIAL STATIC SHIELD.

TABLE A
130(OBA) RINGER CONNECTIONS ONLY

			RINGER OR BUZZER LEAD			
			SL-RD	SL	BK	RD
SET RINGER OR BUZZER NOT TO BE CUT OFF IN SET	WHEN USED AS BRIDGED RINGER ON ANY LINE		A	K	T	R
	WHEN USED AS PRIVATE LINE COMMON SIG. OR OTHER USE	WITH CAPACITOR	A	K	RT	RR
		WITHOUT CAPACITOR	A	A		

* TERMINAL ON NETWORK

TABLE B
K1A1/K1A2 BUSY LAMP CONVERSION

	LEADS					STRAP	DIODE 18C658 1N4004	DIODE 18C658 1N4004
	SWITCH			HOLDKEY				
	SL-WH	SL-GN	SL-YL	YL				
NO STATION BUSY LAMP	1B	N	9	M				
WITH STATION BUSY LAMP	1B	# L2	9	M		# G TO N	# G TO L2	# # L2 TO L1

3
ISSUE NO.

TABLE C
PICKUP-SIGNALLING CONVERSION
CONVERT FROM LOCKING TO NON-LOCKING OR VICE-VERSA AND CHANGE LEADS AS FOLLOWS:

	NO. OF PICKUP KEYS	NO. OF SIG. KEYS CONVERTED FROM P.U. KEYS	NO. OF PRIVATE AND INTERCOMMUNICATING LINES WITH COMMON SIG. KEY	KEY LEADS			
				YL-BN	BN	SL-RD	BN-BK
6 BUTTON SET	5			M	M	M	X
	4	1		M	M	M	SG
	3	2		M	M	SG	X
	4	1	2	M	X	5H	SG
	4	1	3	X	X	5H	SG

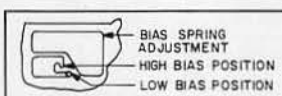

130(BA)470 RINGER IS SHIPPED FROM THE FACTORY WITH THE BIAS SPRING IN THE HIGH BIAS POSITION. THE RINGER IS ADJUSTED TO RING AT 77 VOLTS AT 20 HZ. IN THE HIGH BIAS POSITION.

FOR LOWER VOLTAGES AND 30 HZ. RINGING, THE BIAS SPRING MAY REQUIRE MOVING TO THE LOW BIAS POSITION.

Figure 2: Circuit Label, Model 2564 Types 40M, 41M (Sheet 1 of 2)

TCI Library: www.telephonecollectors.info

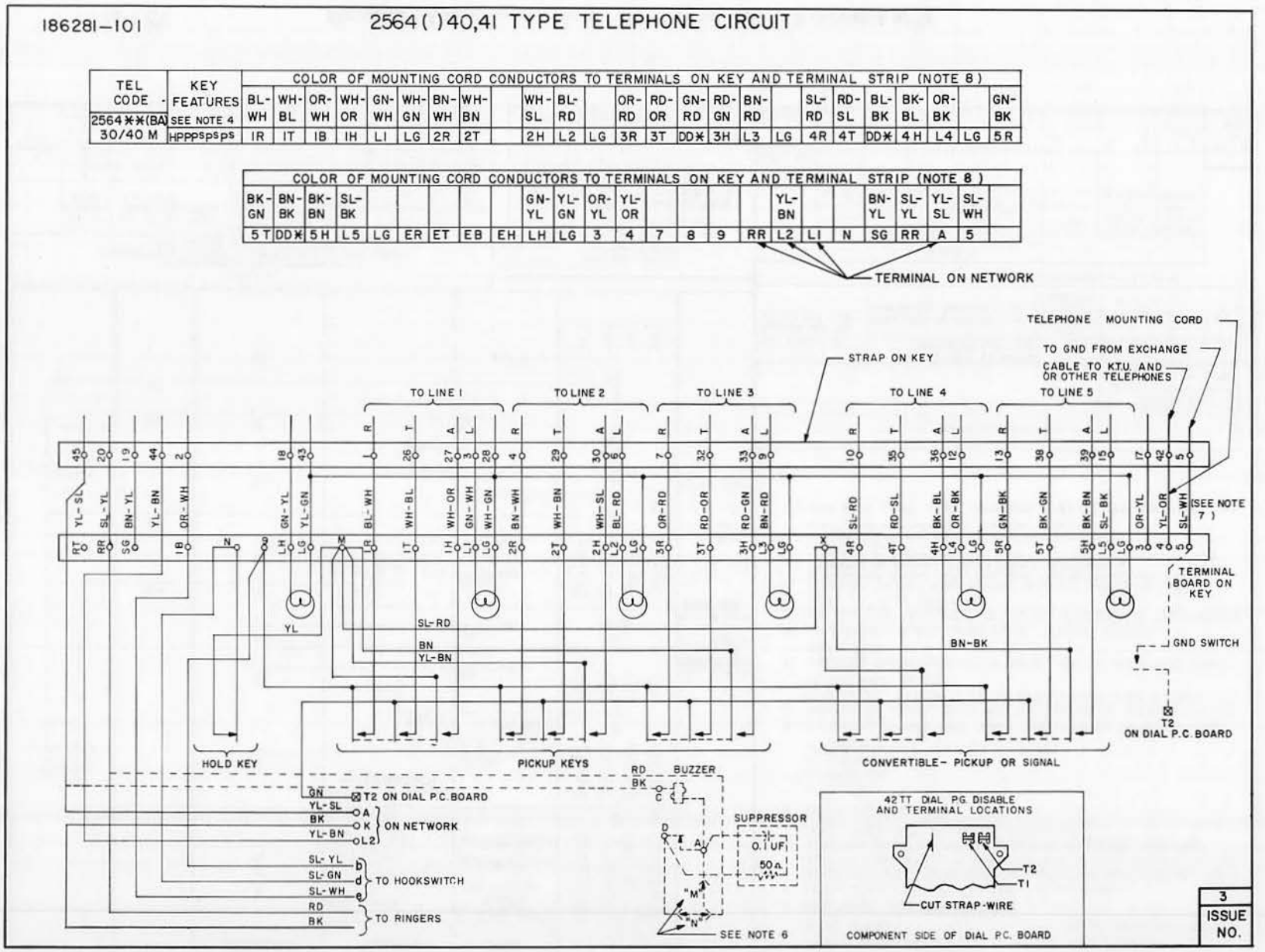

Figure 2: Circuit Label, Model 2564 Types 40M, 41M (Sheet 2 of 2)

TCI Library: www.telephonecollectors.info

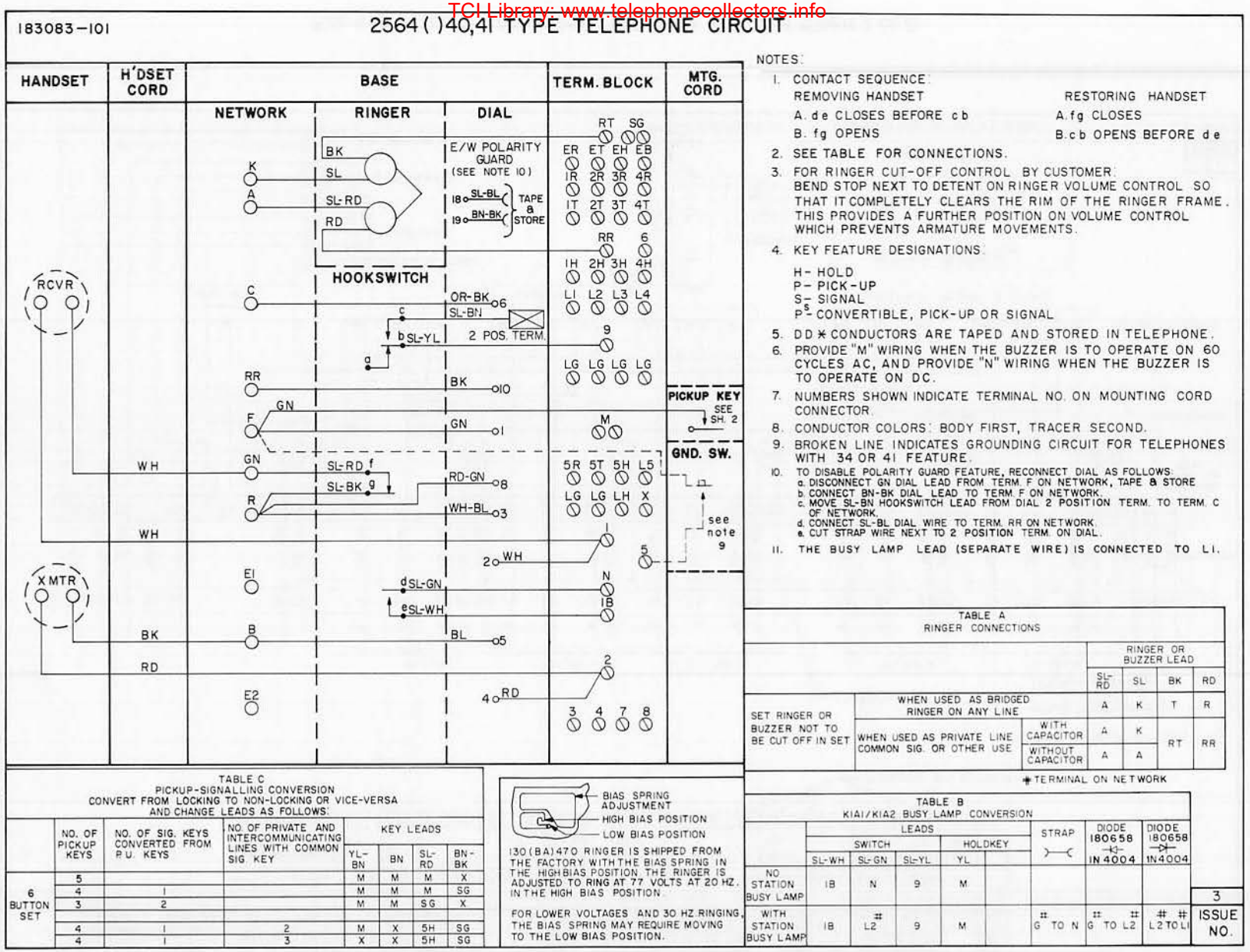

NOTES:

1. CONTACT SEQUENCE:
   REMOVING HANDSET — RESTORING HANDSET
   A. de CLOSES BEFORE cb — A. fg CLOSES
   B. fg OPENS — B. cb OPENS BEFORE de
2. SEE TABLE FOR CONNECTIONS.
3. FOR RINGER CUT-OFF CONTROL BY CUSTOMER: BEND STOP NEXT TO DETENT ON RINGER VOLUME CONTROL SO THAT IT COMPLETELY CLEARS THE RIM OF THE RINGER FRAME. THIS PROVIDES A FURTHER POSITION ON VOLUME CONTROL WHICH PREVENTS ARMATURE MOVEMENTS.
4. KEY FEATURE DESIGNATIONS:
   H - HOLD
   P - PICK-UP
   S - SIGNAL
   P^S - CONVERTIBLE, PICK-UP OR SIGNAL
5. DD * CONDUCTORS ARE TAPED AND STORED IN TELEPHONE.
6. PROVIDE "M" WIRING WHEN THE BUZZER IS TO OPERATE ON 60 CYCLES AC, AND PROVIDE "N" WIRING WHEN THE BUZZER IS TO OPERATE ON DC.
7. NUMBERS SHOWN INDICATE TERMINAL NO. ON MOUNTING CORD CONNECTOR.
8. CONDUCTOR COLORS: BODY FIRST, TRACER SECOND.
9. BROKEN LINE INDICATES GROUNDING CIRCUIT FOR TELEPHONES WITH 34 OR 41 FEATURE.
10. TO DISABLE POLARITY GUARD FEATURE, RECONNECT DIAL AS FOLLOWS:
    a. DISCONNECT GN DIAL LEAD FROM TERM. F ON NETWORK, TAPE & STORE
    b. CONNECT BN-BK DIAL LEAD TO TERM. F ON NETWORK.
    c. MOVE SL-BN HOOKSWITCH LEAD FROM DIAL 2 POSITION TERM. TO TERM. C OF NETWORK.
    d. CONNECT SL-BL DIAL WIRE TO TERM. RR ON NETWORK.
    e. CUT STRAP WIRE NEXT TO 2 POSITION TERM. ON DIAL.
11. THE BUSY LAMP LEAD (SEPARATE WIRE) IS CONNECTED TO LI.

TABLE A
RINGER CONNECTIONS

			RINGER OR BUZZER LEAD			
			SL-RD	SL	BK	RD
SET RINGER OR BUZZER NOT TO BE CUT OFF IN SET	WHEN USED AS BRIDGED RINGER ON ANY LINE		A	K	T	R
	WHEN USED AS PRIVATE LINE COMMON SIG. OR OTHER USE	WITH CAPACITOR	A	K	RT	RR
		WITHOUT CAPACITOR	A	A		

* TERMINAL ON NETWORK

TABLE B
KIA1/KIA2 BUSY LAMP CONVERSION

	LEADS: SWITCH SL-WH	SWITCH SL-GN	SWITCH SL-YL	HOLDKEY YL		STRAP	DIODE 180658 IN4004	DIODE 180658 IN4004
NO STATION BUSY LAMP	18	N	9	M				
WITH STATION BUSY LAMP	18	# L2	9	M		# G TO N	# G TO L2	# # L2 TO LI

3 ISSUE NO.

TABLE C
PICKUP-SIGNALLING CONVERSION
CONVERT FROM LOCKING TO NON-LOCKING OR VICE-VERSA AND CHANGE LEADS AS FOLLOWS:

	NO. OF PICKUP KEYS	NO. OF SIG. KEYS CONVERTED FROM P.U. KEYS	NO. OF PRIVATE AND INTERCOMMUNICATING LINES WITH COMMON SIG. KEY	KEY LEADS: YL-BN	BN	SL-RD	BN-BK
6 BUTTON SET	5			M	M	M	X
	4	1		M	M	M	SG
	3	2		M	M	SG	X
	4	1	2	M	X	5H	SG
	4	1	3	X	X	5H	SG

130(BA)470 RINGER IS SHIPPED FROM THE FACTORY WITH THE BIAS SPRING IN THE HIGH BIAS POSITION. THE RINGER IS ADJUSTED TO RING AT 77 VOLTS AT 20 HZ. IN THE HIGH BIAS POSITION.

FOR LOWER VOLTAGES AND 30 HZ RINGING, THE BIAS SPRING MAY REQUIRE MOVING TO THE LOW BIAS POSITION.

Figure 3: Circuit Label, Model 2564 Types 40R, 41R (Sheet 1 of 2)

TCI Library: www.telephonecollectors.info

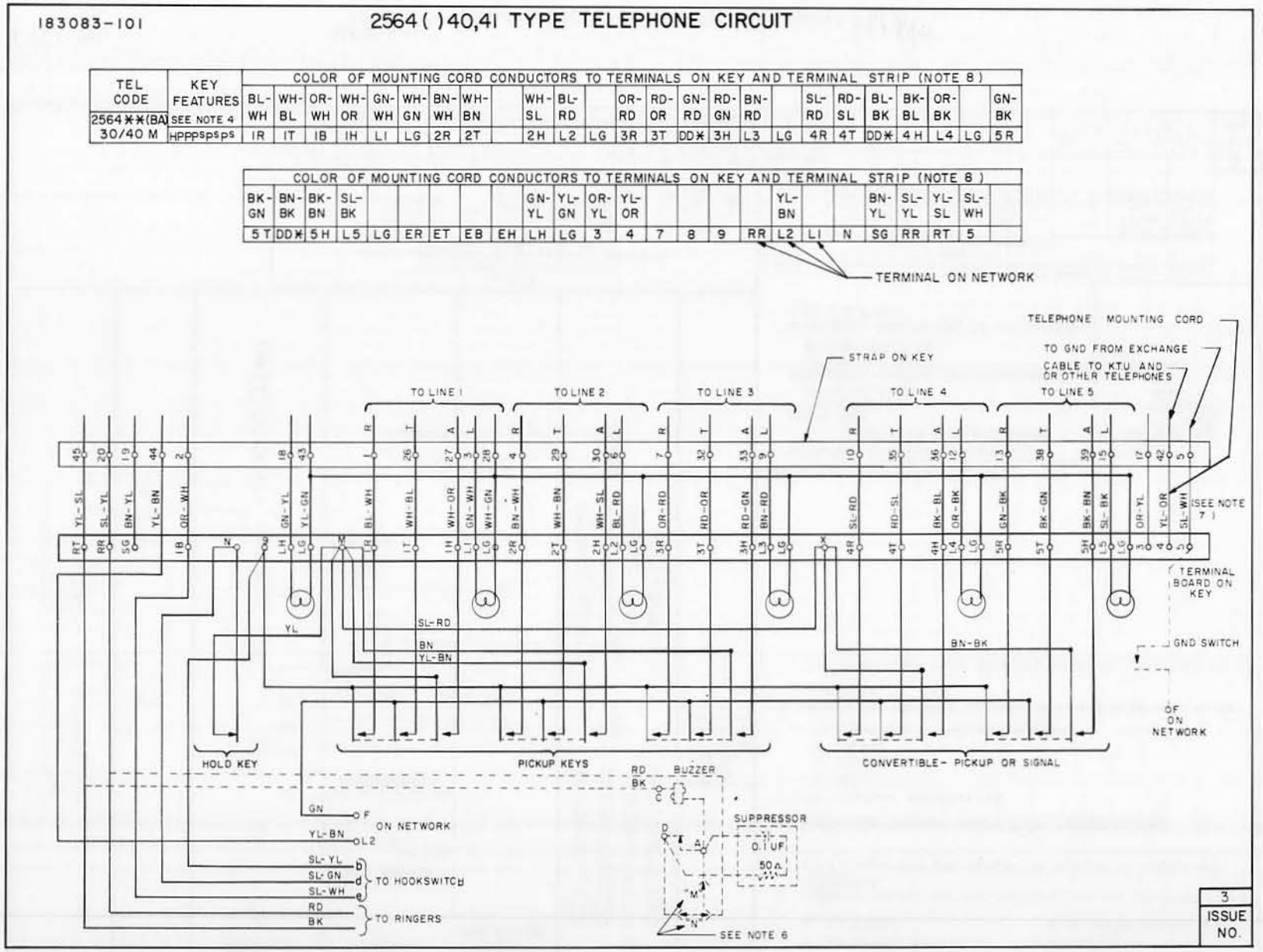

Figure 3: Circuit Label, Model 2564 Types 40R, 41R (Sheet 2 of 2)

TCI Library: www.telephonecollectors.info

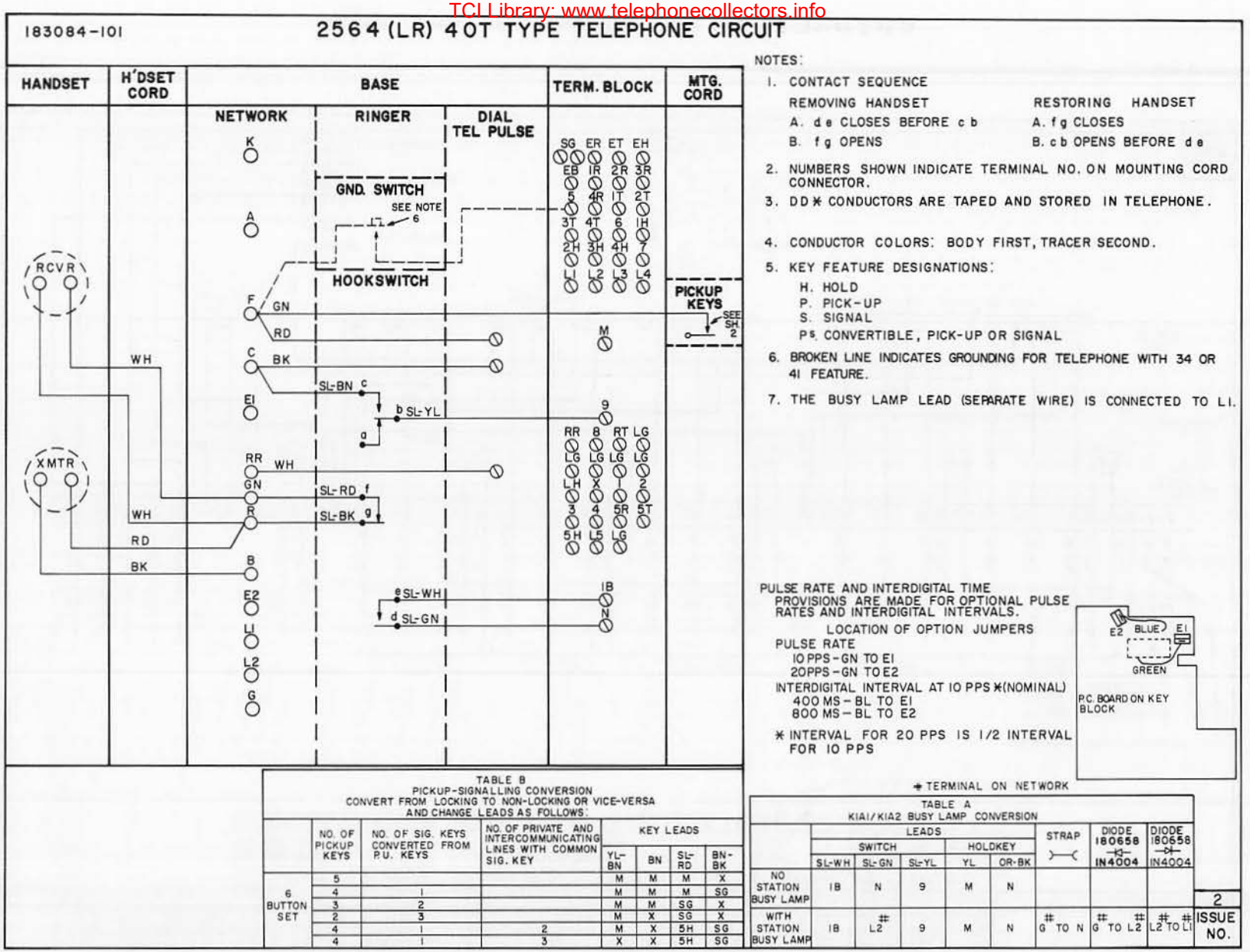

Figure 4: Circuit Label, Model 2564 Type 40T (Sheet 1 of 2)

TCI Library: www.telephonecollectors.info

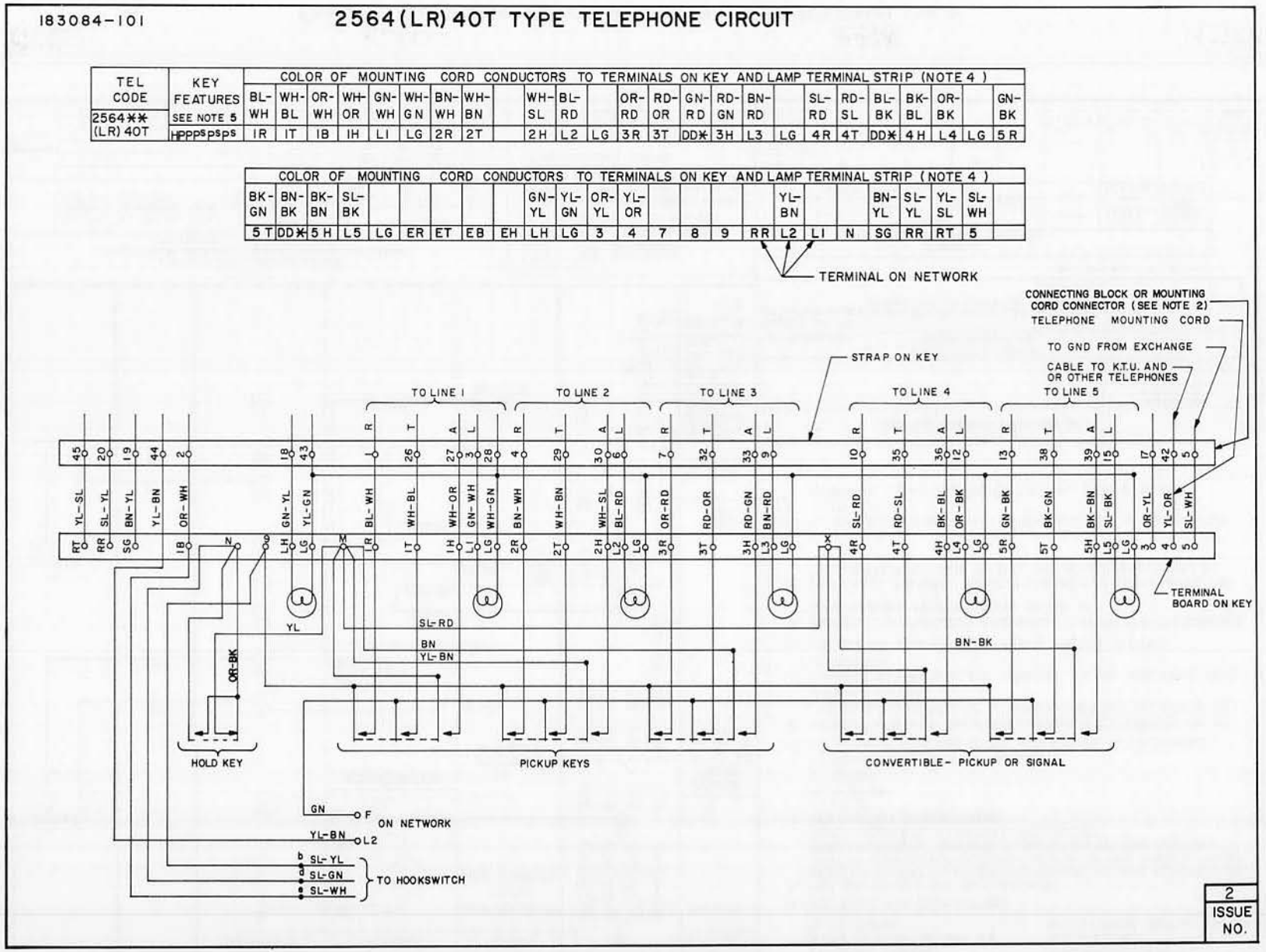

Figure 4: Circuit Label, Model 2564 Type 40T (Sheet 2 of 2)

TCI Library: www.telephonecollectors.info

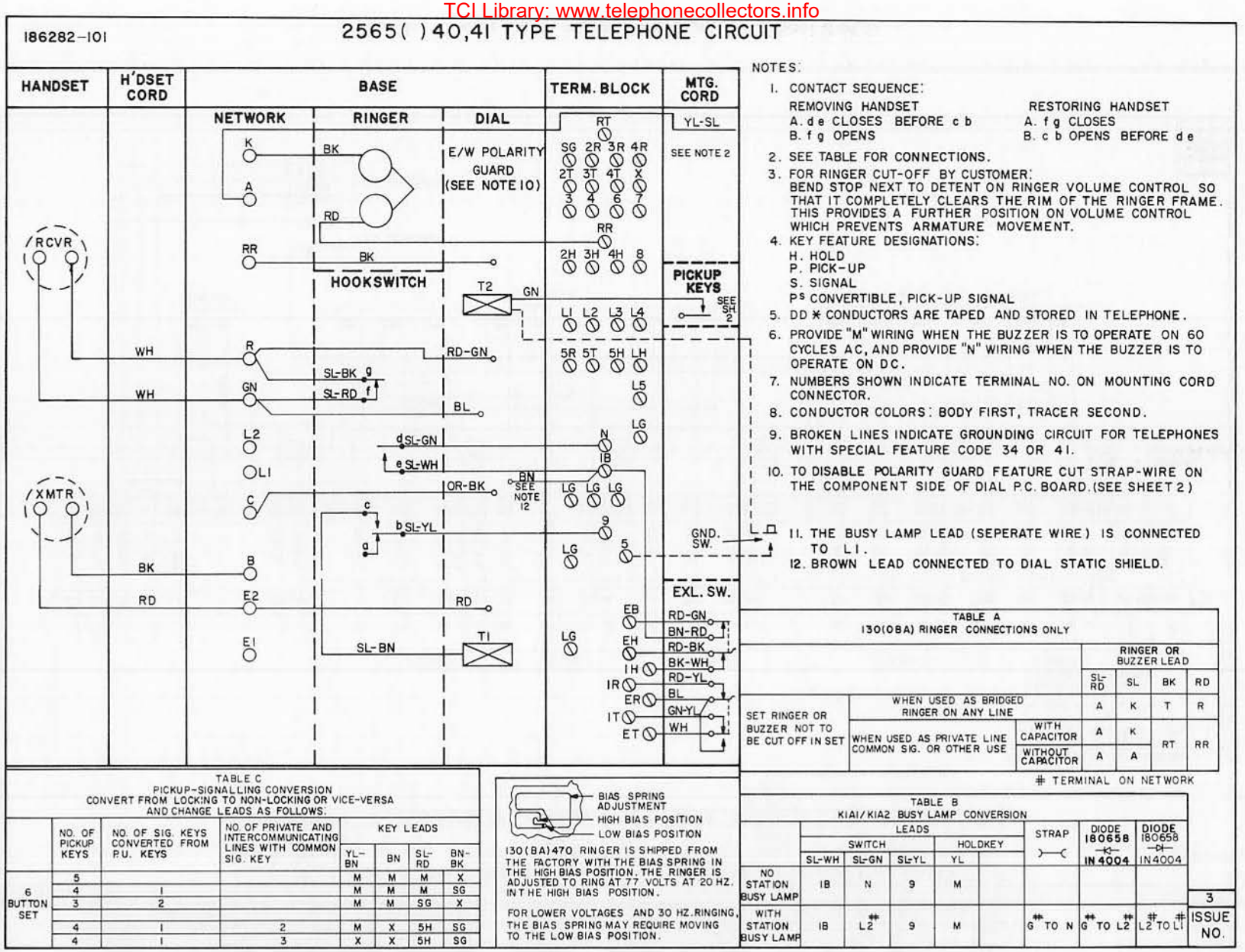

Figure 5: Circuit Labe', Model 2565 Types 40M, 41M, 40R (Sheet 1 of 2)

TCI Library: www.telephonecollectors.info

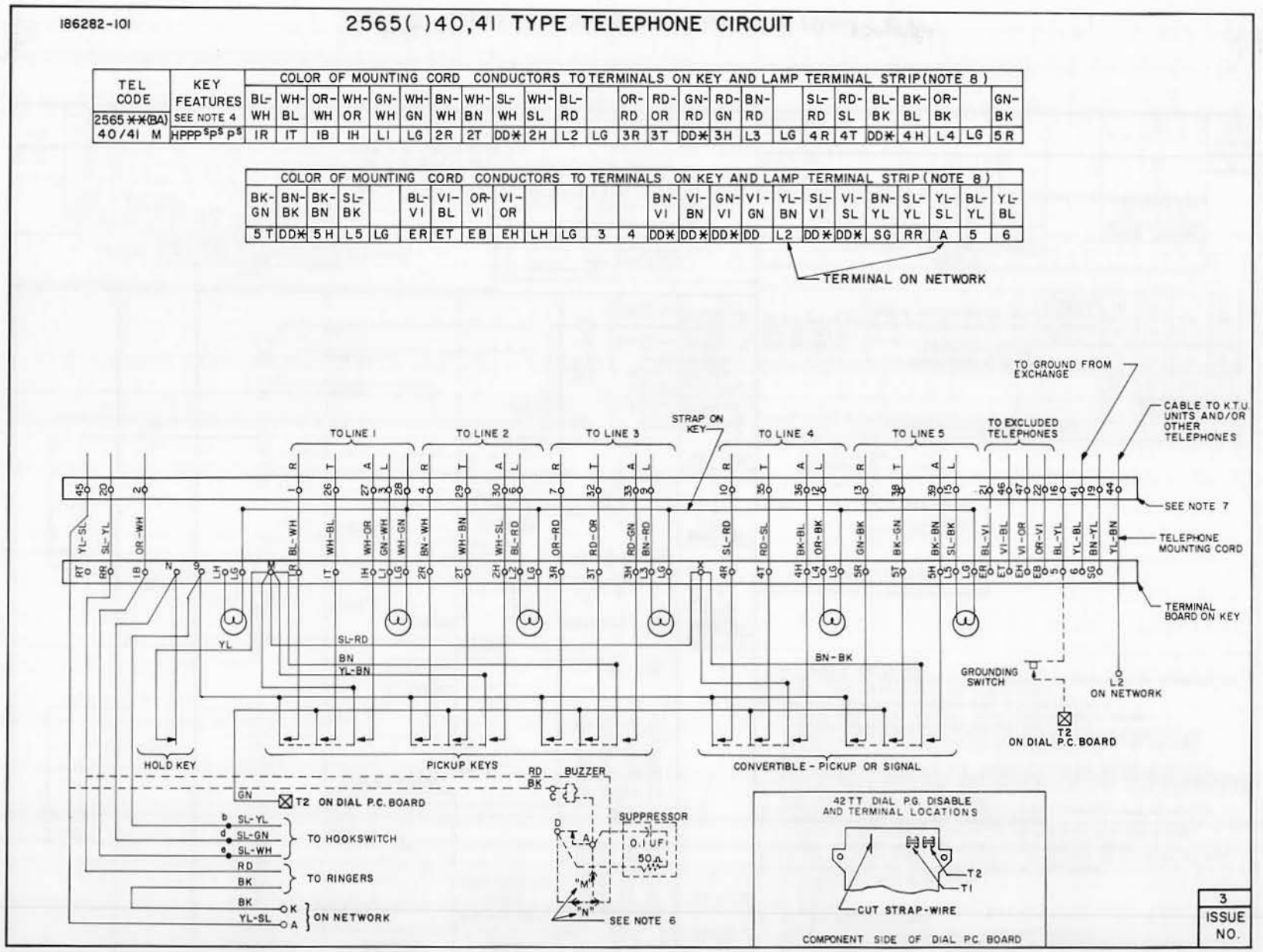

Figure 5: Circuit Label, Model 2565 Types 40M, 41M, 40R (Sheet 2 of 2)

TCI Library: www.telephonecollectors.info

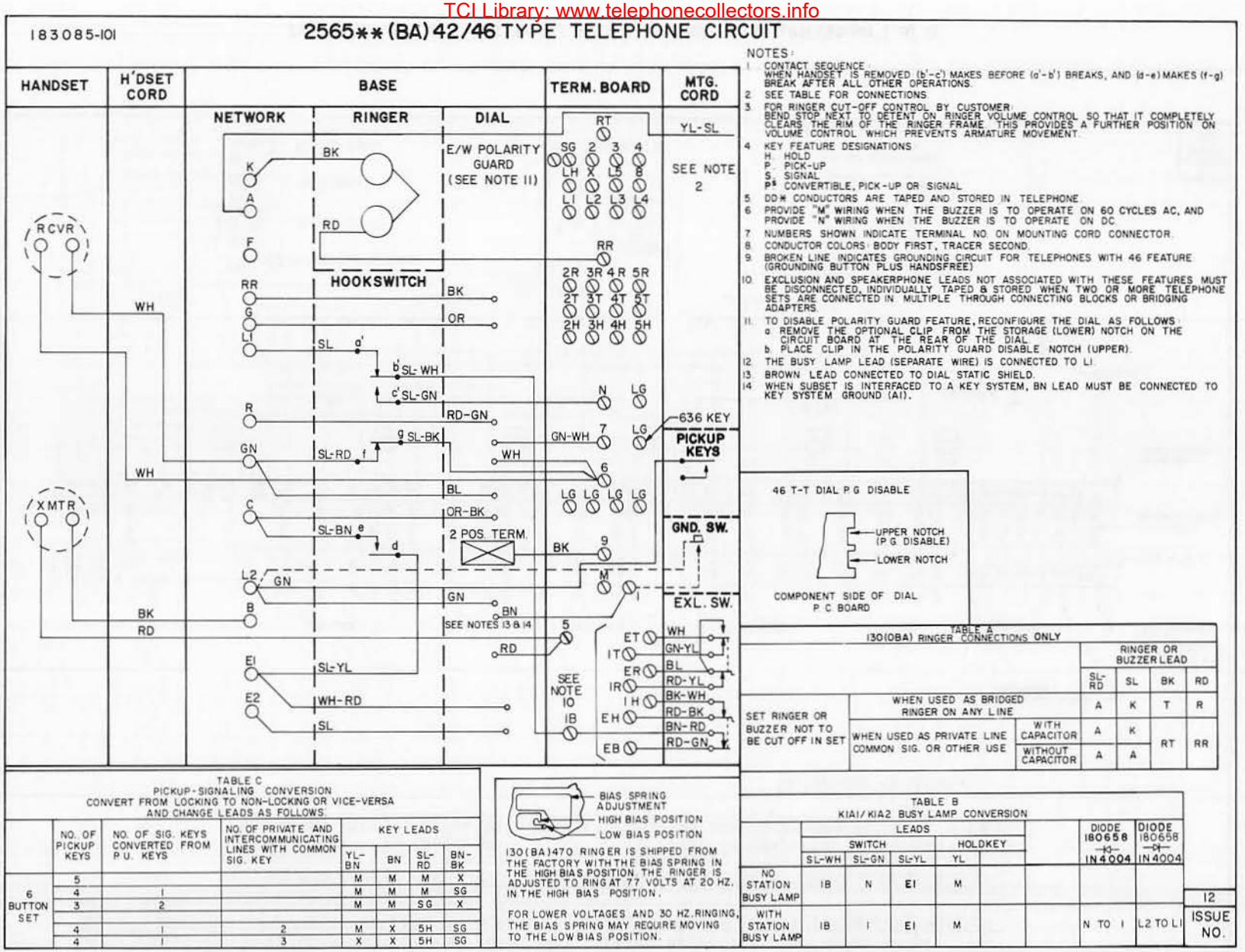

Figure 6: Circuit Label, Model 2565 Types 42, 46 (Sheet 1 of 2)

TCI Library: www.telephonecollectors.info

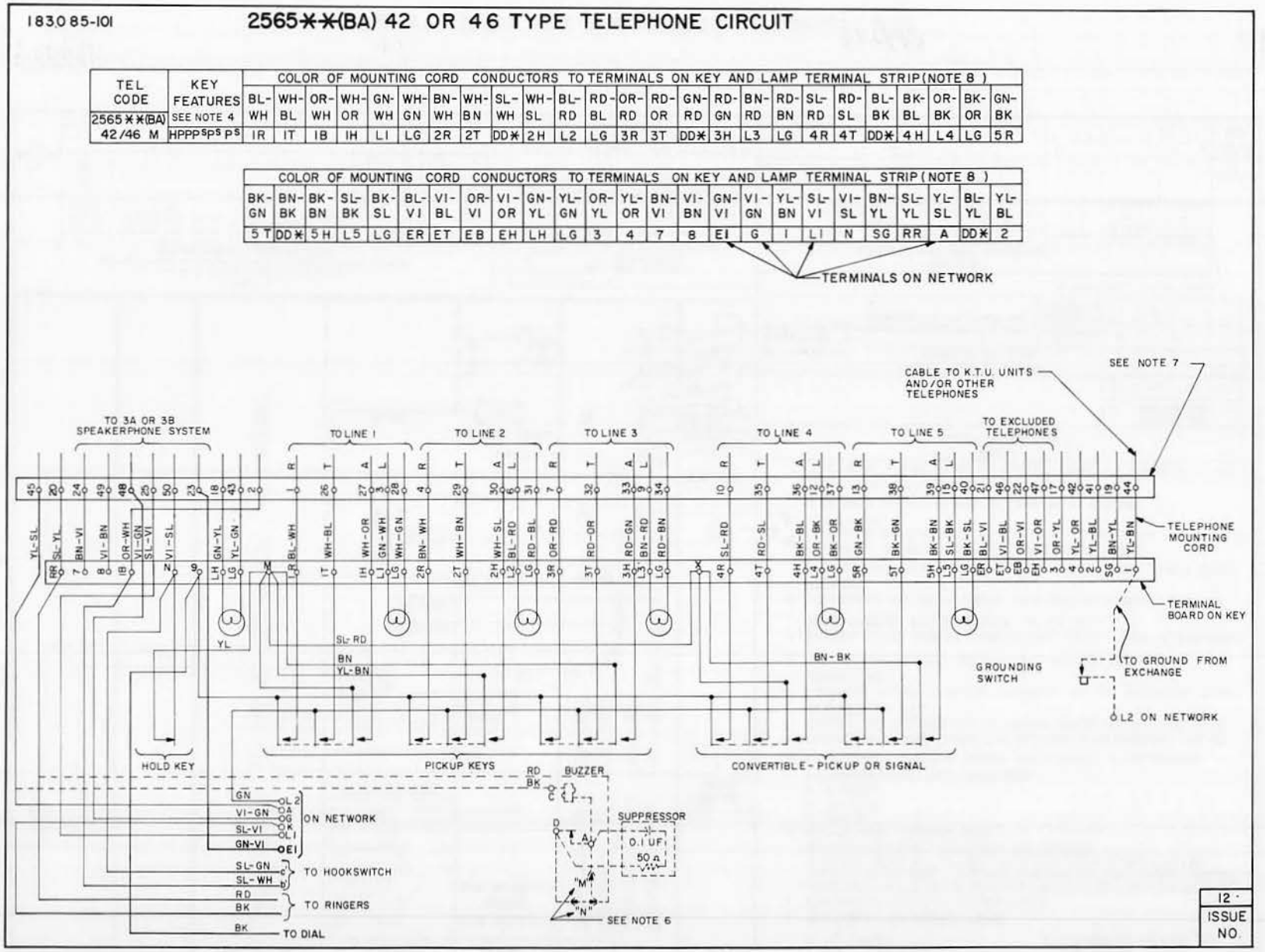

TEL CODE	KEY FEATURES	COLOR OF MOUNTING CORD CONDUCTORS TO TERMINALS ON KEY AND LAMP TERMINAL STRIP (NOTE 8)																							
2565**(BA)	SEE NOTE 4	BL-WH	WH-BL	OR-WH	WH-OR	GN-WH	WH-GN	BN-WH	WH-BN	SL-WH	WH-SL	BL-RD	RD-BL	OR-RD	RD-OR	GN-RD	RD-GN	BN-RD	RD-BN	SL-RD	RD-SL	BL-BK	BK-BL	OR-BK	BK-OR	GN-BK
42/46 M	HPPP^{SP}S P^{S}	1R	1T	1B	1H	1L	1G	2R	2T	DD*	2H	L2	LG	3R	3T	DD*	3H	L3	LG	4R	4T	DD*	4H	L4	LG	5R

COLOR OF MOUNTING CORD CONDUCTORS TO TERMINALS ON KEY AND LAMP TERMINAL STRIP (NOTE 8)																								
BK-GN	BN-BK	BK-BN	SL-BK	BK-SL	BL-VI	VI-BL	OR-VI	VI-OR	GN-YL	YL-GN	OR-YL	YL-OR	BN-VI	VI-BN	GN-VI	VI-GN	YL-BN	SL-VI	VI-SL	BN-YL	SL-YL	YL-SL	BL-YL	YL-BL
5T	DD*	5H	L5	LG	ER	ET	EB	EH	LH	LG	3	4	7	8	EI	G	I	LI	N	SG	RR	A	DD*	2

Figure 6: Circuit Label, Model 2565 Types 42, 46 (Sheet 2 of 2)

TCI Library: www.telephonecollectors.info

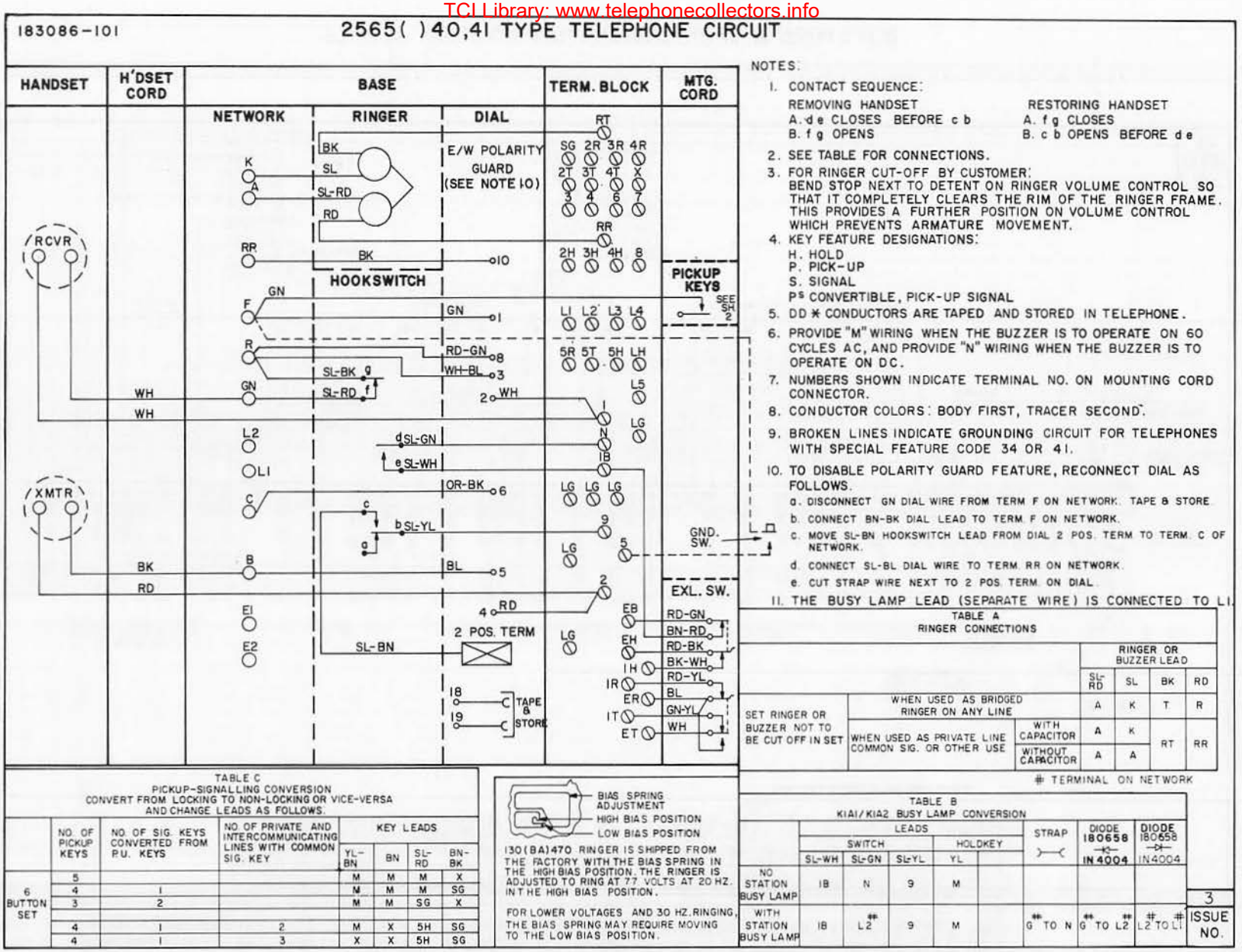

Figure 7: Circuit Label, Model 2565 Type 41R (Sheet 1 of 2)

TCI Library: www.telephonecollectors.info

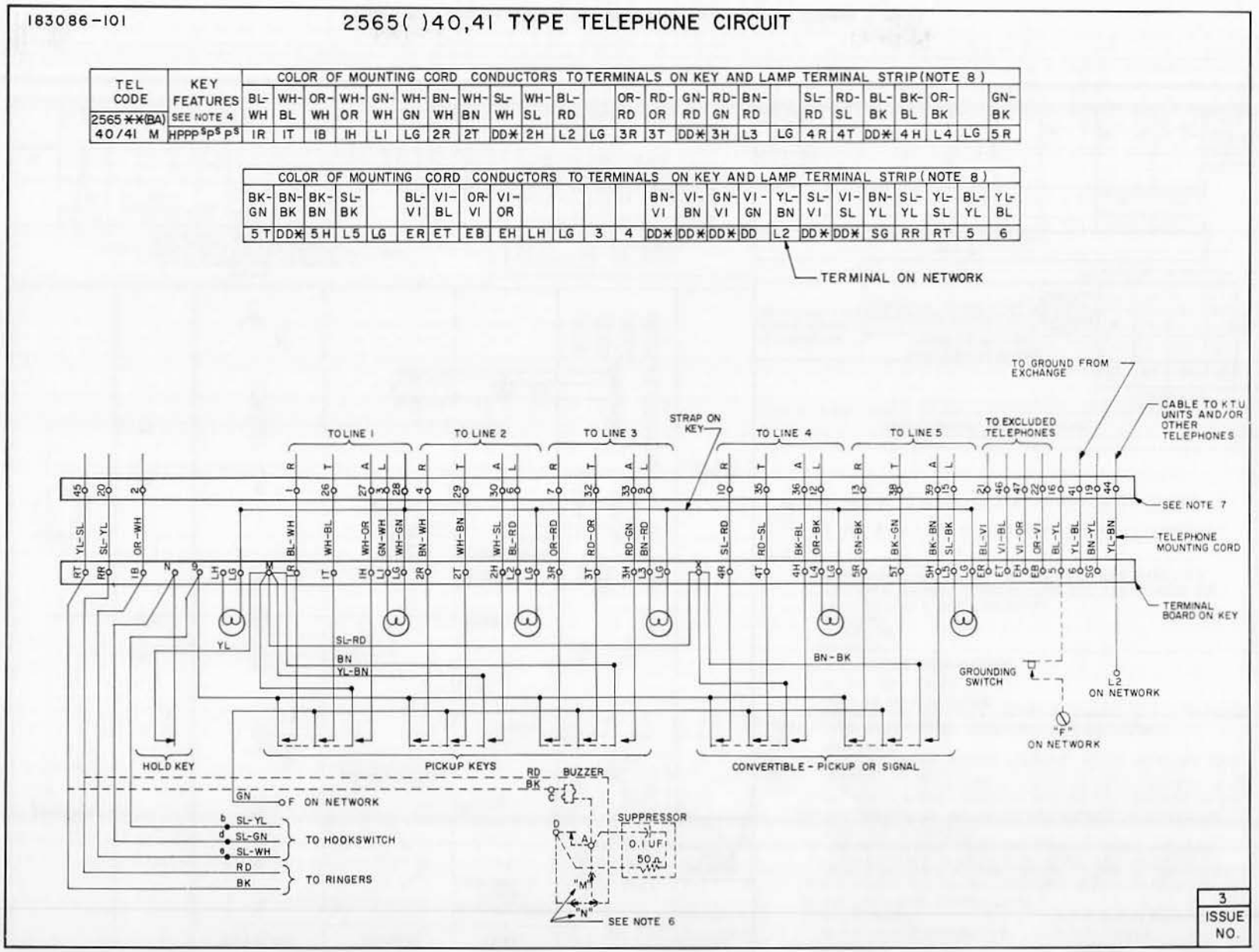

Figure 7: Circuit Label, Model 2565 Type 41R (Sheet 2 of 2)

TCI Library: www.telephonecollectors.info

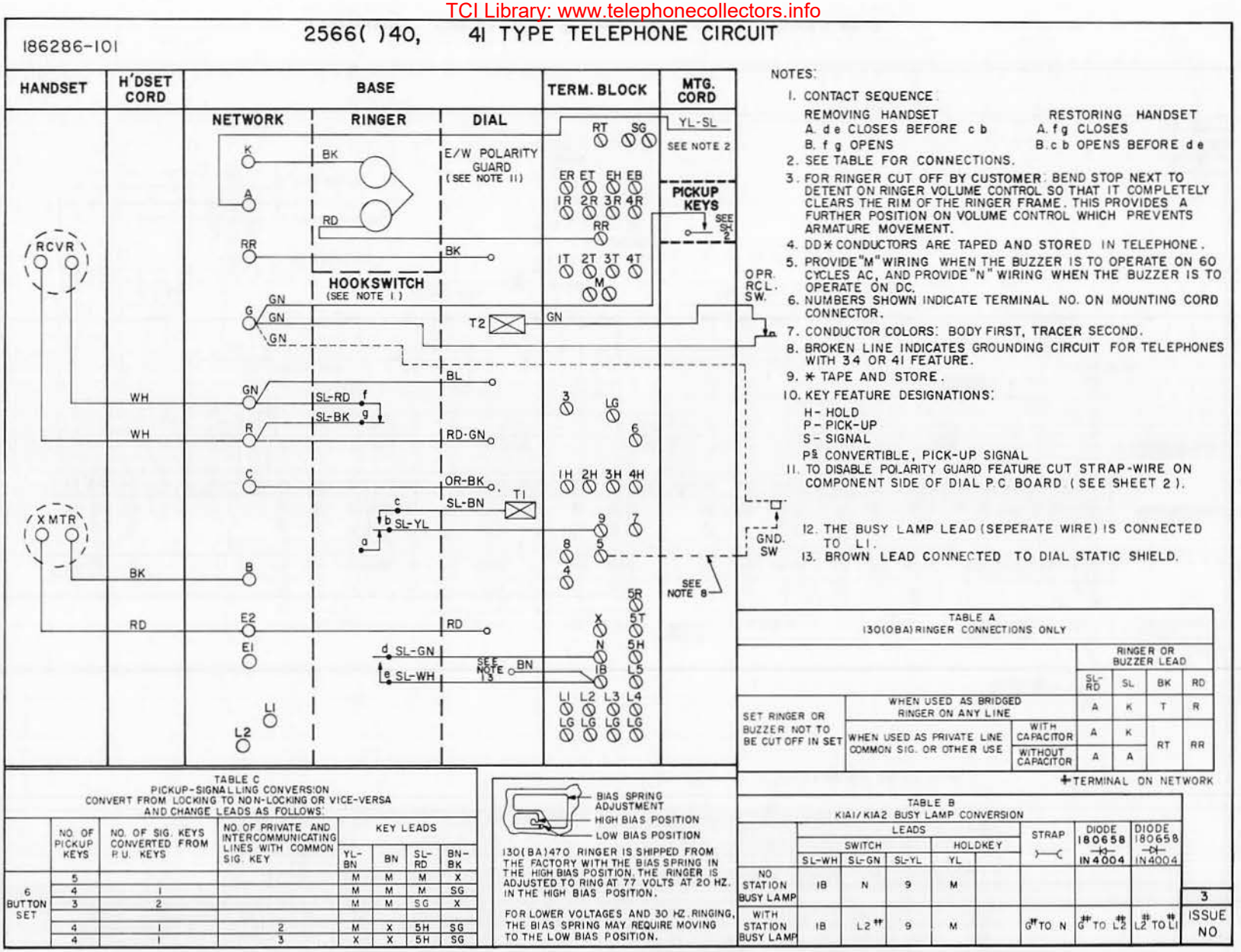

Figure 8: Circuit Label, Model 2566 Types 40, 41 (Sheet 1 of 2)

TCI Library: www.telephonecollectors.info

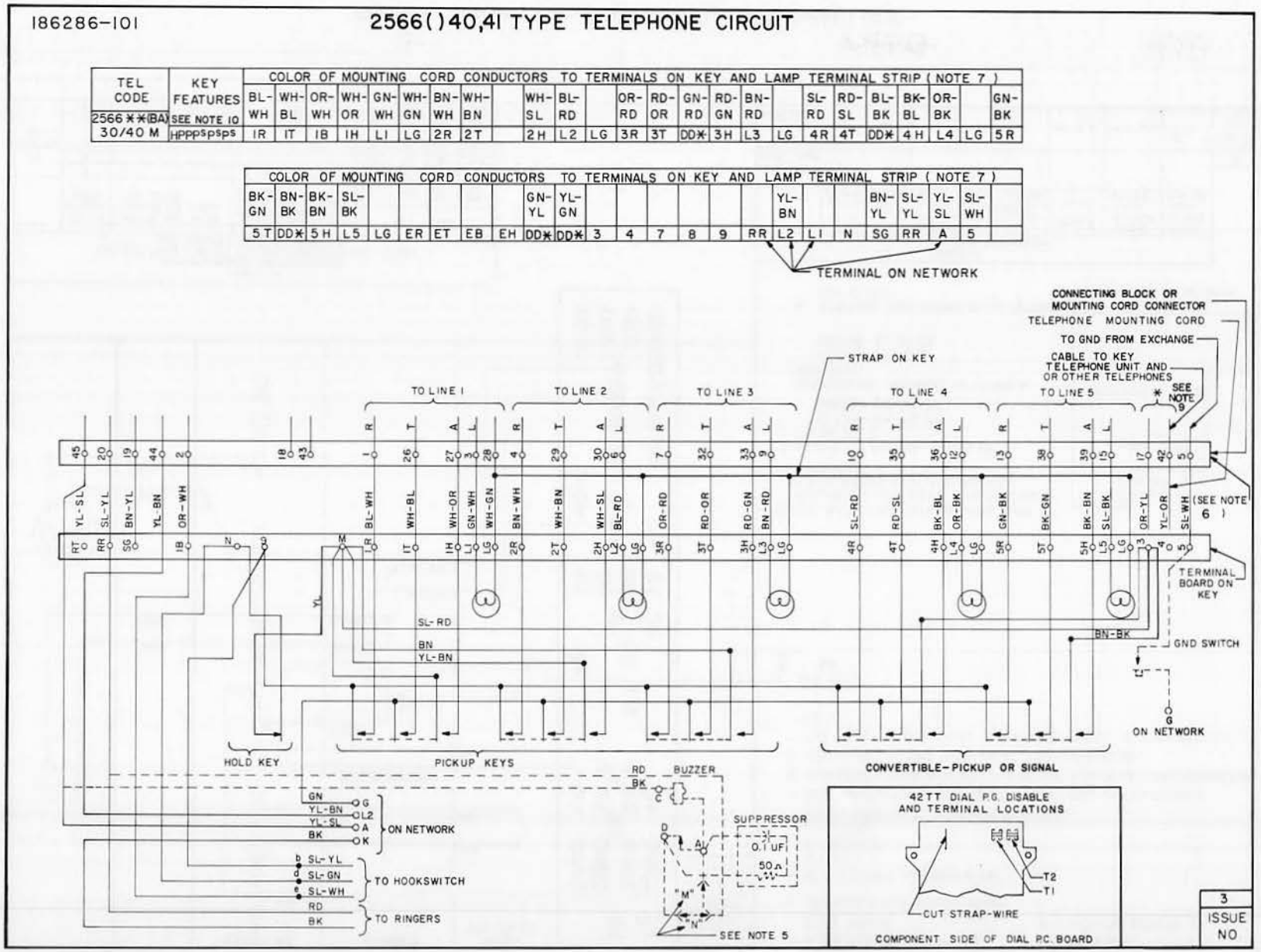

Figure 8: Circuit Label, Model 2566 Types 40, 41 (Sheet 2 of 2)

TCI Library: www.telephonecollectors.info

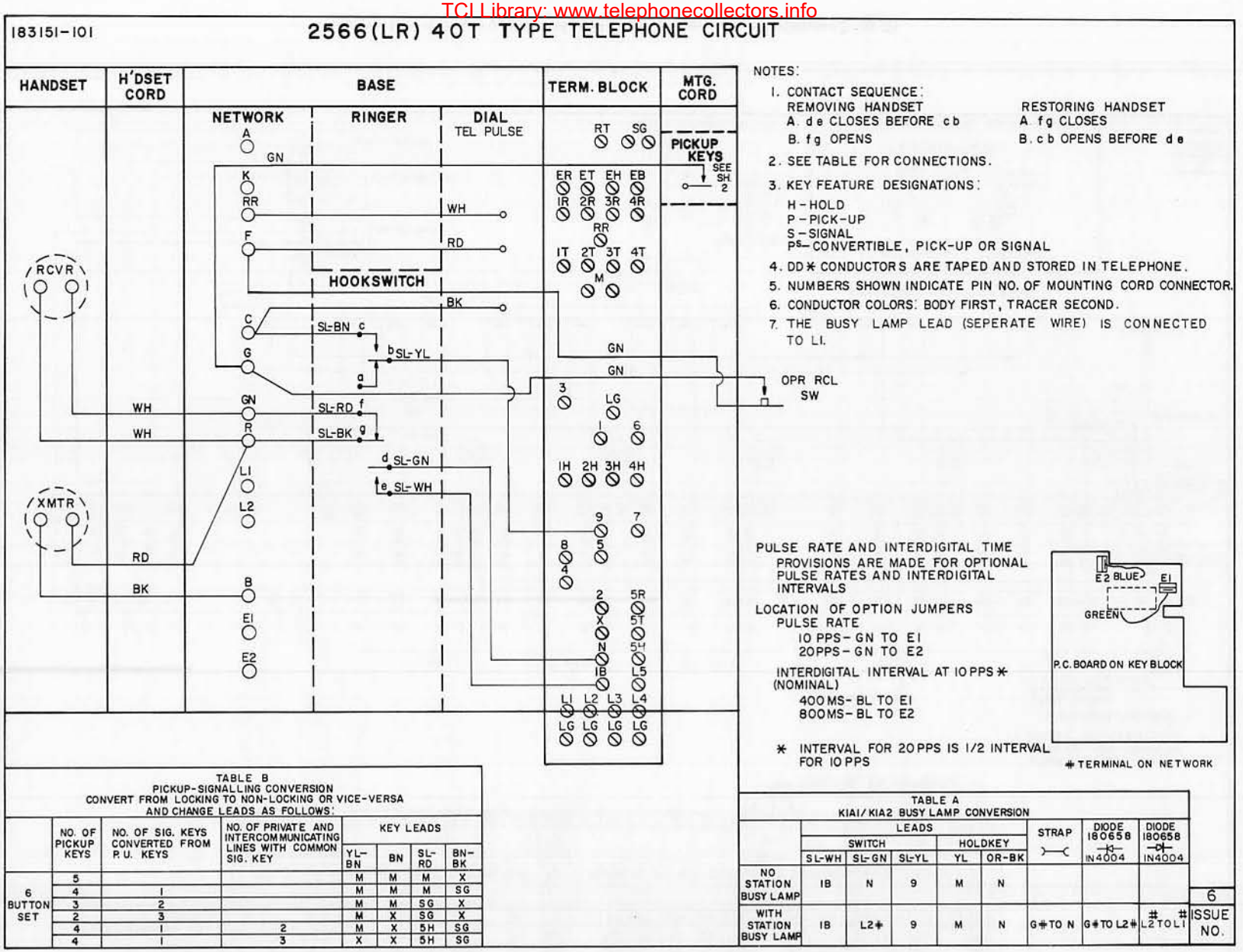

TABLE B
PICKUP-SIGNALLING CONVERSION
CONVERT FROM LOCKING TO NON-LOCKING OR VICE-VERSA AND CHANGE LEADS AS FOLLOWS:

	NO. OF PICKUP KEYS	NO. OF SIG. KEYS CONVERTED FROM P.U. KEYS	NO. OF PRIVATE AND INTERCOMMUNICATING LINES WITH COMMON SIG. KEY	KEY LEADS			
				YL-BN	BN	SL-RD	BN-BK
6 BUTTON SET	5			M	M	M	X
	4	1		M	M	M	SG
	3	2		M	M	SG	X
	2	3		M	X	SG	X
	4	1	2	M	X	5H	SG
	4	1	3	X	X	5H	SG

TABLE A
KIA1/KIA2 BUSY LAMP CONVERSION

	LEADS					STRAP	DIODE 180658 IN4004	DIODE 180658 IN4004	
	SWITCH			HOLDKEY					
	SL-WH	SL-GN	SL-YL	YL	OR-BK				
NO STATION BUSY LAMP	1B	N	9	M	N				6
WITH STATION BUSY LAMP	1B	L2#	9	M	N	G# TO N	G# TO L2#	# L2 TO L1	ISSUE NO.

Figure 9: Circuit Label, Model 2566 Type 40T (Sheet 1 of 2)

TCI Library: www.telephonecollectors.info

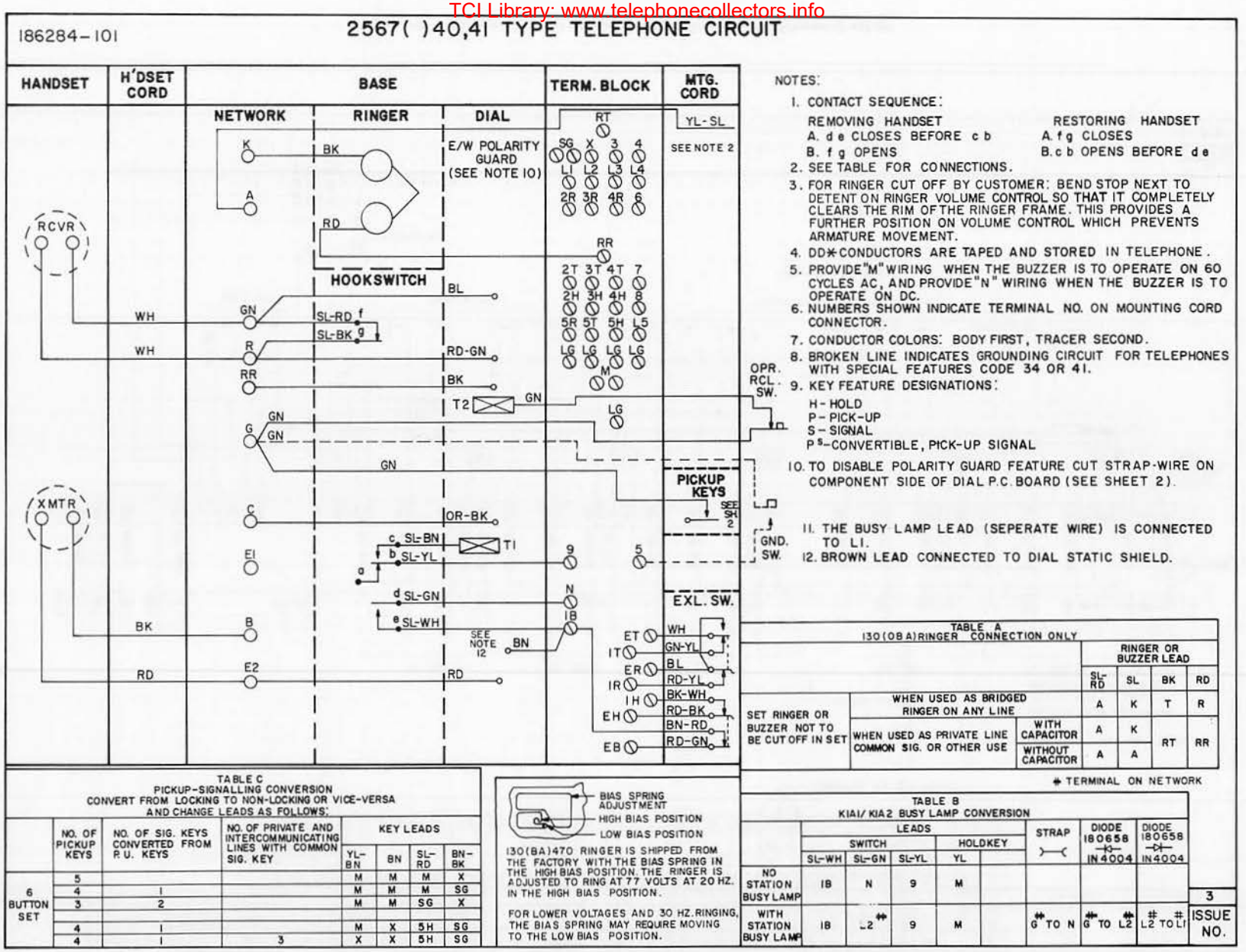

Figure 10: Circuit Label, Model 2567 Types 40M, 41M (Sheet 1 of 2)

TCI Library: www.telephonecollectors.info

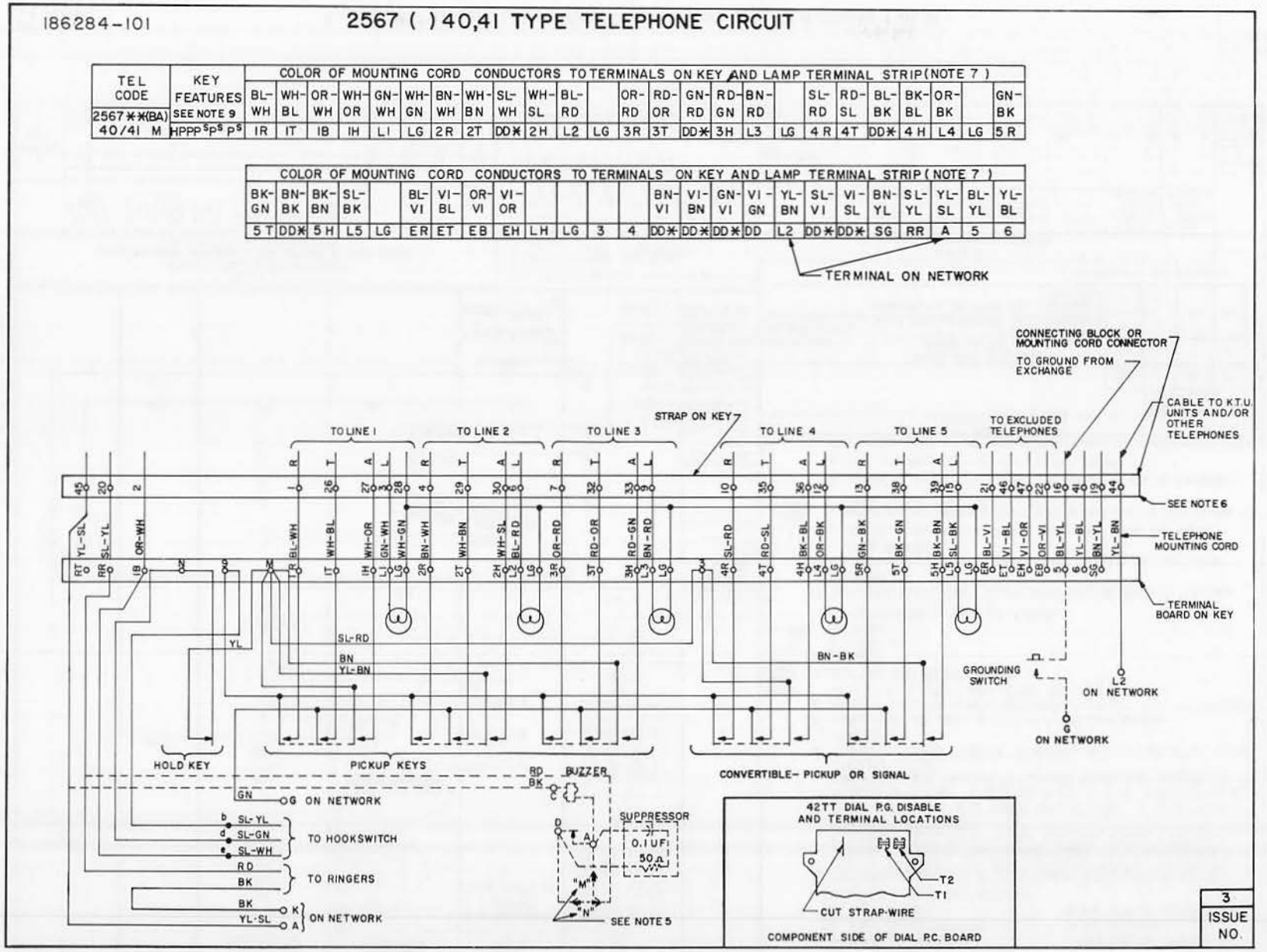

Figure 10: Circuit Label, Model 2567 Types 40M, 41M (Sheet 2 of 2)

TCI Library: www.telephonecollectors.info

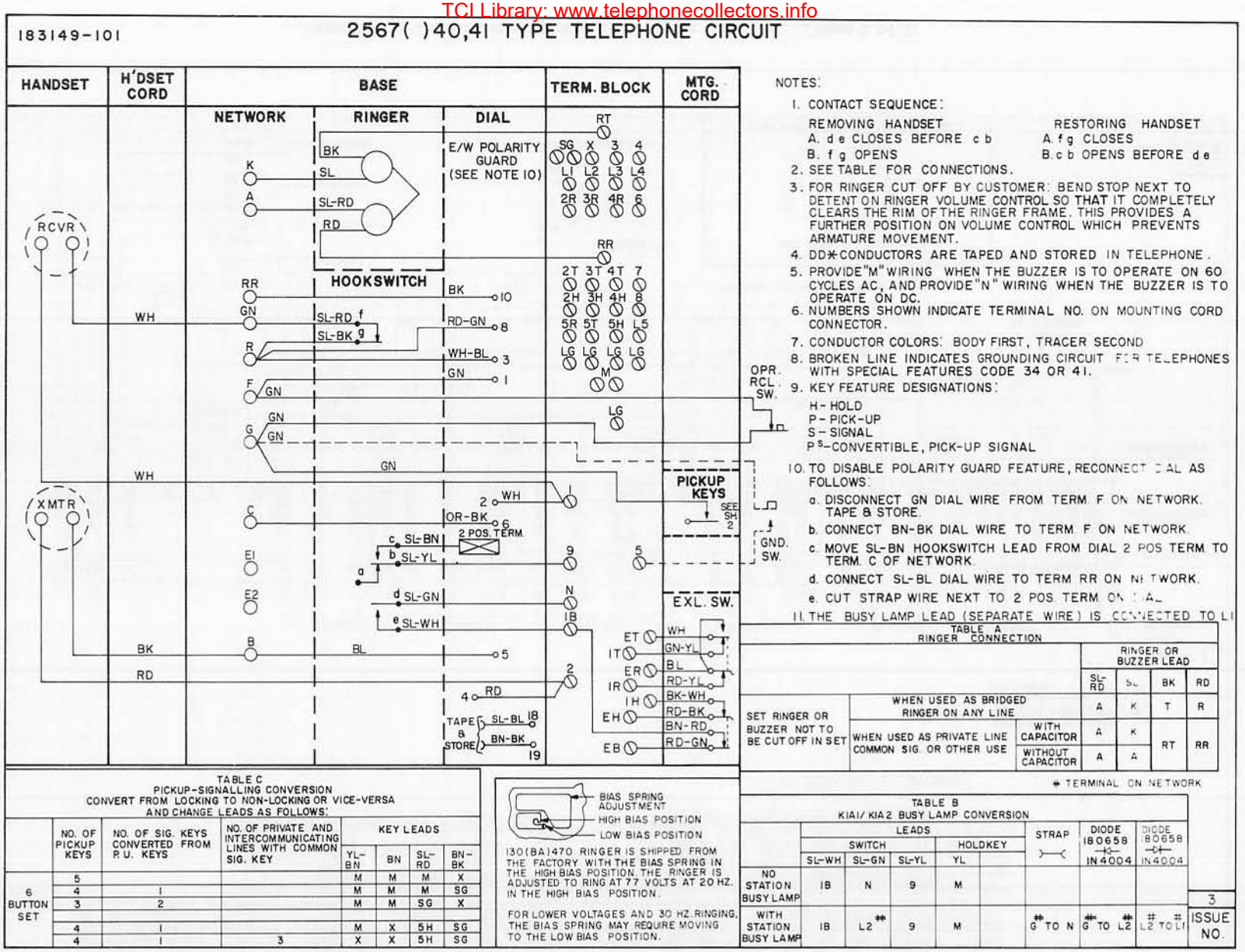

Figure 11: Circuit Label, Model 2567 Types 40R, 41R (Sheet 1 of 2)

TCI Library: www.telephonecollectors.info

183149-101

2567 ( ) 40,41 TYPE TELEPHONE CIRCUIT

TEL CODE	KEY FEATURES	COLOR OF MOUNTING CORD CONDUCTORS TO TERMINALS ON KEY AND LAMP TERMINAL STRIP (NOTE 7)																										
2567 ** (BA)	SEE NOTE 9	BL-WH	WH-BL	OR-WH	WH-OR	GN-WH	WH-GN	BN-WH	WH-BN	SL-WH	WH-SL	BL-RD		OR-RD	RD-OR	GN-RD	RD-GN	BN-RD		SL-RD	RD-SL	BL-BK	BK-BL	OR-BK		GN-BK
40/41 M	HPPP^{S}P^{S}P^{S}	IR	IT	IB	IH	LI	LG	2R	2T	DD*	2H	L2	LG	3R	3T	DD*	3H	L3	LG	4R	4T	DD*	4H	L4	LG	5R

COLOR OF MOUNTING CORD CONDUCTORS TO TERMINALS ON KEY AND LAMP TERMINAL STRIP (NOTE 7)																								
BK-GN	BN-BK	BK-BN	SL-BK		BL-VI	VI-BL	OR-VI	VI-OR					BN-VI	VI-BN	GN-VI	VI-GN	YL-BN	SL-VI	VI-SL	BN-YL	SL-YL	YL-SL	BL-YL	YL-BL
5T	DD*	5H	L5	LG	ER	ET	EB	EH	LH	LG	3	4	DD*	DD*	DD*	DD	L2	DD*	DD*	SG	RR	RT	5	6

TERMINAL ON NETWORK

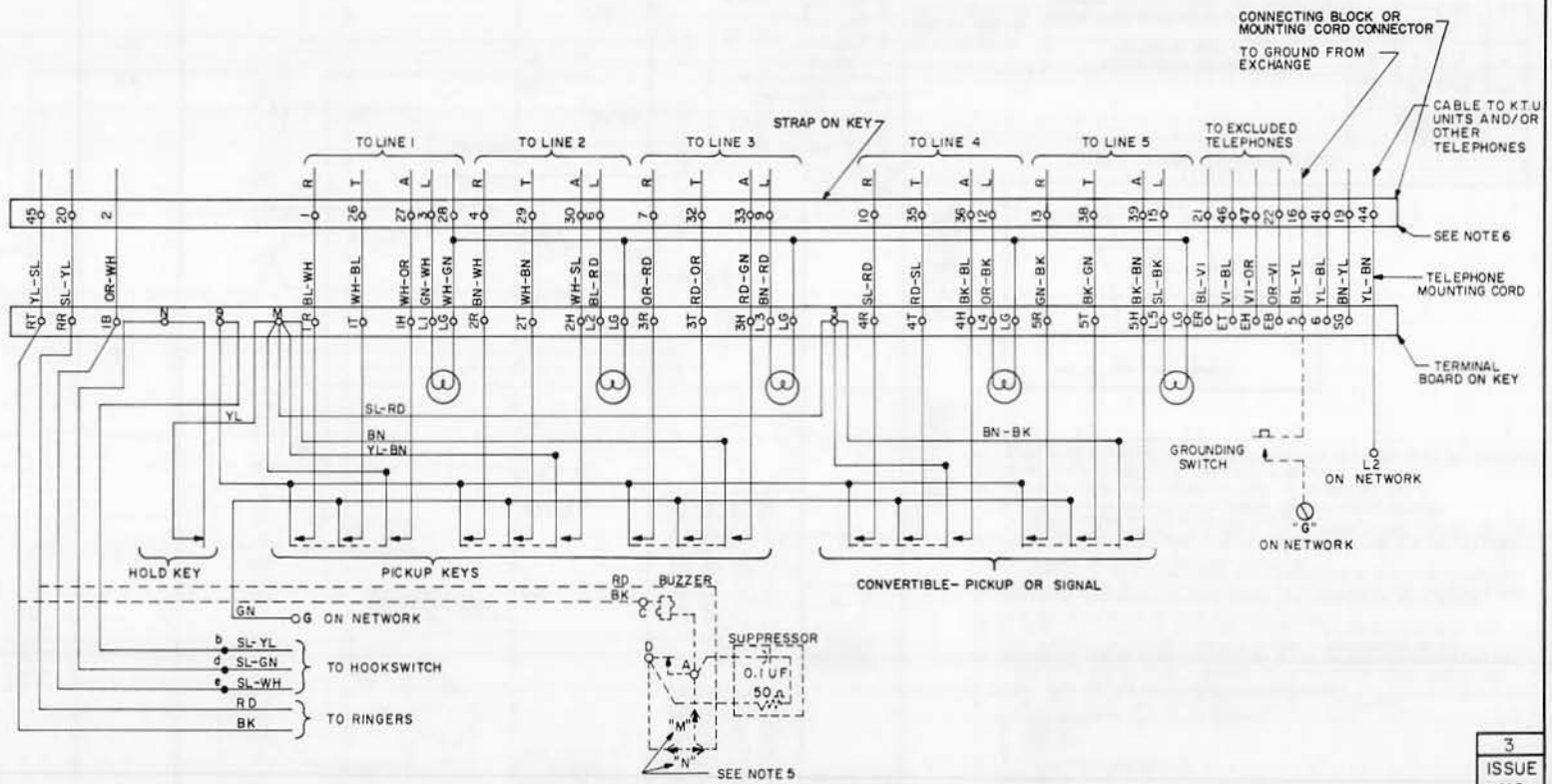

Figure 11: Circuit Label, Model 2567 Types 40R, 41R (Sheet 2 of 2)

TCI Library: www.telephonecollectors.info

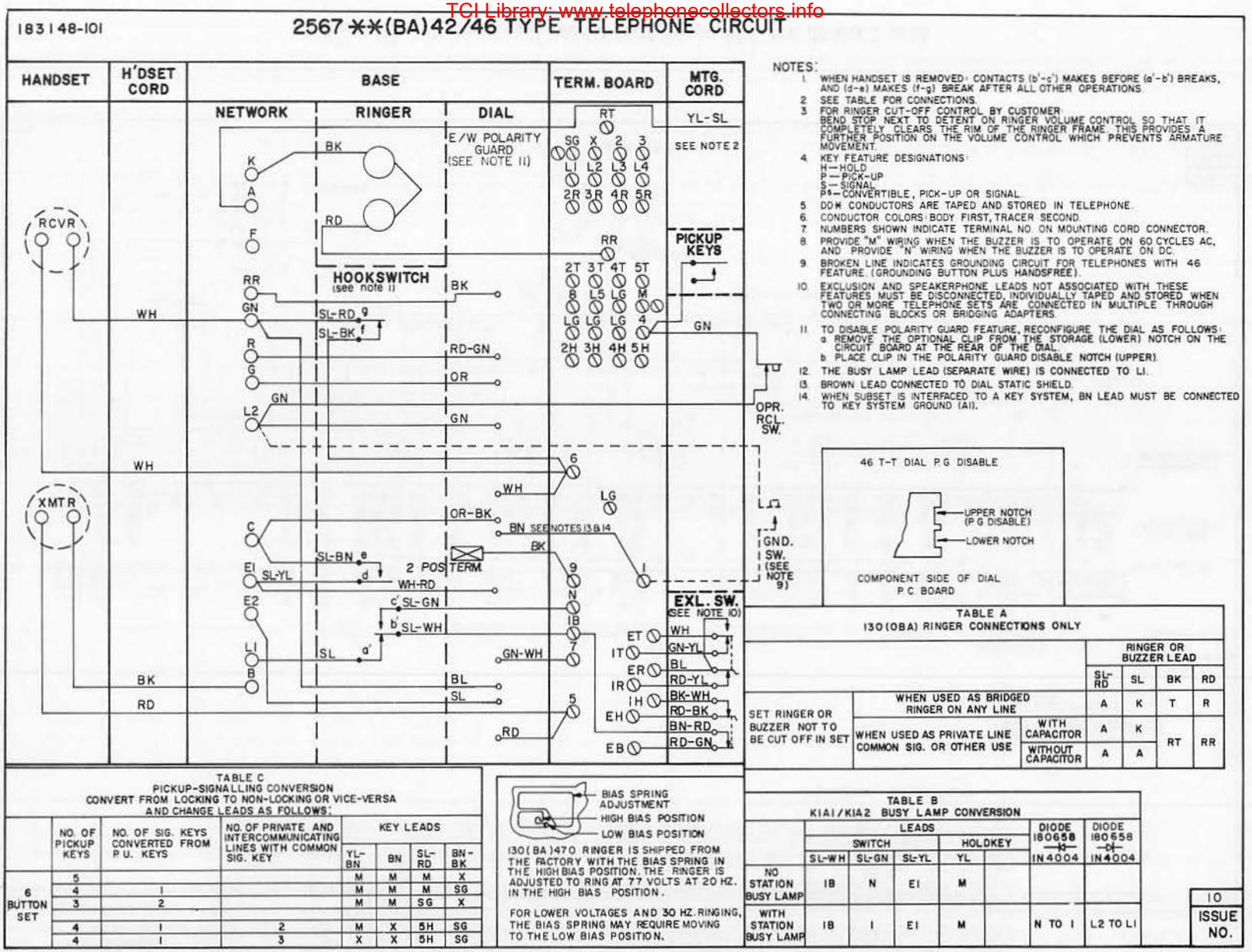

Figure 12: Circuit Label, Model 2567 Types 42, 46 (Sheet 1 of 2)

TCI Library: www.telephonecollectors.info

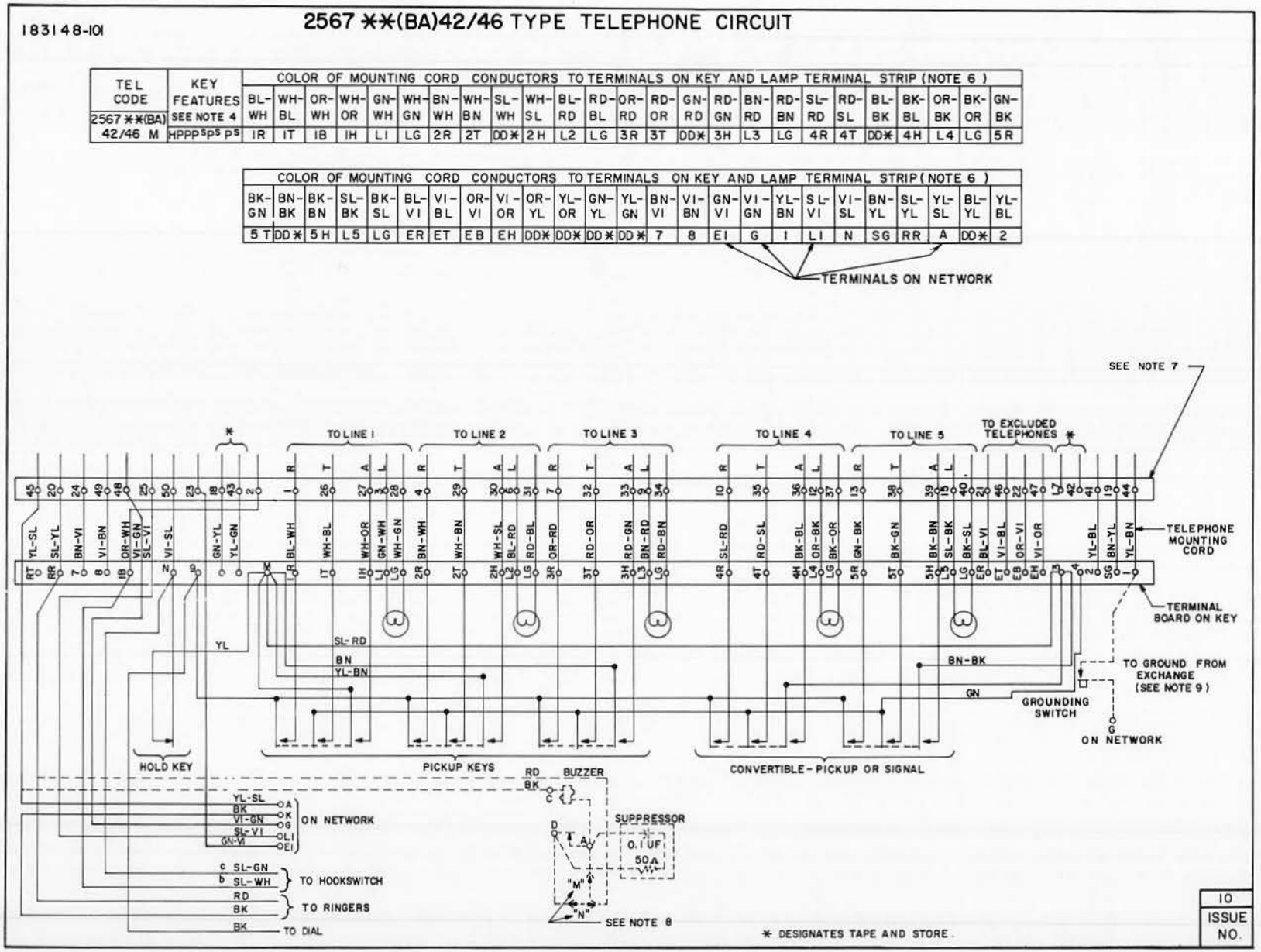

TEL CODE	KEY FEATURES	COLOR OF MOUNTING CORD CONDUCTORS TO TERMINALS ON KEY AND LAMP TERMINAL STRIP (NOTE 6)																							
2567 **(BA)	SEE NOTE 4	BL-WH	WH-BL	OR-WH	WH-OR	GN-WH	WH-GN	BN-WH	WH-BN	SL-WH	WH-SL	BL-RD	RD-BL	OR-RD	RD-OR	GN-RD	RD-GN	BN-RD	RD-BN	SL-RD	RD-SL	BL-BK	BK-BL	OR-BK	BK-OR	GN-BK
42/46 M	HPPPSPSPS	1R	1T	1B	1H	L1	LG	2R	2T	DD*	2H	L2	LG	3R	3T	DD*	3H	L3	LG	4R	4T	DD*	4H	L4	LG	5R

COLOR OF MOUNTING CORD CONDUCTORS TO TERMINALS ON KEY AND LAMP TERMINAL STRIP (NOTE 6)																									
BK-GN	BN-BK	BK-BN	SL-BK	BK-SL	BL-VI	VI-BL	OR-VI	VI-OR	OR-YL	YL-OR	GN-YL	YL-GN	BN-VI	VI-BN	GN-VI	VI-GN	YL-BN	SL-VI	VI-SL	BN-YL	SL-YL	YL-SL	BL-YL	YL-BL
5T	DD*	5H	L5	LG	ER	ET	EB	EH	DD*	DD*	DD*	DD*	7	8	EI	G	I	LI	N	SG	RR	A	DD*	2

Figure 12: Circuit Label, Model 2567 Types 42, 46 (Sheet 2 of 2)

TCI Library: www.telephonecollectors.info

3-LINE, ROTARY DIAL, DESK TELEPHONES
GENERAL DESCRIPTION

CONTENTS PAGE

1. GENERAL DESCRIPTION 1
MODEL 576**( ) 40 2
MODEL 576**( ) 41 2
MODEL 577**( ) 40 2
2. PUSHBUTTON KEYS 2
3. OPERATOR RECALL BUTTON 3
4. GROUNDING PUSHBUTTON 3
5. VISUAL SIGNALS 3
6. OPERATION 3
7. OPTIONAL ARRANGEMENTS 3
8. INSTALLATION 4
9. INTERCOM 4
A. Manual Intercom 4
B. Dial Selective Intercom 4
10. MODIFICATIONS FOR EXCLUSION . 6
11. RINGER WIRING 6
12. MAINTENANCE 6

AW 82-354

Figure 1: 3-Line, Rotary Dial, Desk Telephone

1. GENERAL DESCRIPTION

1.01 This document covers the 3-line, rotary dial, desk telephone. (See Figure 1.) A general description as well as information that is peculiar to 3-line, rotary dial, desk telephones is included.

1.02 This section supersedes all previous documents covering a general description of 3-line, rotary dial, desk telephones. For additional information, refer to Section 50-576-101, Replacement Parts and to Section 50-576-102, Circuit Labels. For information on installation, maintenance, and components or equipment, consult related documents of the ITT Telephone Apparatus Practices Manual.

1.03 The Models 576 and 577 desk telephones are 3-line, rotary dial, desk telephones that are designed to provide access to three lines without the use of external switching equipment. Each separate line has its own associated hold key. The Models 576 and 577 are similar with the exception of an exclusion feature being included in the Model 577 telephone. These telephones are anti-sidetone type units that operate efficiently over a wide range of loop resistances and line impedances.

1.04 The Models 576 and 577 desk telephones are identified by a code number stamped in ink on the bottom of the base plate. Refer to ordering information in Table A for an explanation of each code number and a list of available versions and features.

1.05 Variations of the Models 576 and 577 desk telephones are briefly described below. Circuit labels for these models are contained in Section 50-576-102.

TCI Library: www.telephonecollectors.info

TABLE A

ORDERING INFORMATION – TELEPHONES

CODE NUMBERS

TELEPHONE CODE NUMBERS ARE FORMED IN SIX STEPS AS FOLLOWS:

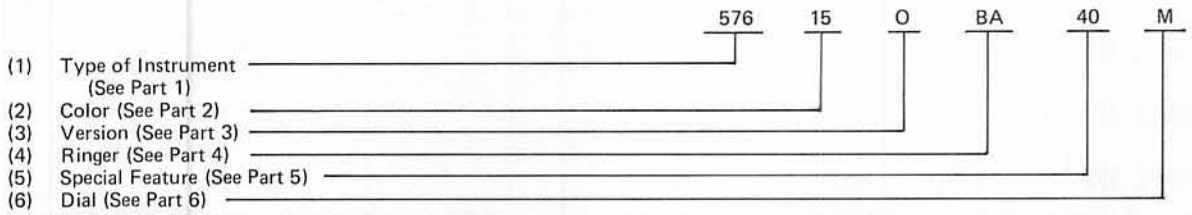

PART 1 TYPE OF INSTRUMENT

CODE	DESCRIPTION	COLOR OFFERED	VERSION OFFERED	RINGER OFFERED	FEATURE OFFERED	DIAL OFFERED
576	3-Line Rotary Dial	00, 05, 09, 13, 15, 44, and 45 (Available On All Models)	O	BA, LR	40, 41	M, R
577	3-Line Rotary Dial W/Exclusion		O	BA, LR	40	M, R

REFER TO INDIVIDUAL UNIT DESCRIPTION FOR COMPLETE DESCRIPTION OF FEATURE COMBINATIONS

PART 2 COLORS		PART 3 VERSIONS		PART 4 RINGERS		PART 5 SPECIAL FEATURES		PART 6 DIALS	
CODE	COLORS	CODE	VERSIONS	CODE	RINGERS	CODE	SPECIAL FEATURES	CODE	DIAL
00	Black	O	Conventional	LR	Less Ringer	40	No Special Feature	M	Metropolitan (Letters & Numerals)
05	Moss Green			BA	Straight Line	41	40 Combined with Push-button for Grounding		
09	Ivory								
13	Beige							R	Regular (Numerals Only)
15	White								
44	Light Ash								
45	Cocoa Brown								

AW 82-274

MODEL 576**( ) 40

1.06 The Model 576**( ) 40 is a 3-line, rotary dial, desk telephone. It provides no additional outstanding features and is fitted with a 19-conductor mounting cord terminated in an Amphenol-type plug.

MODEL 576**( ) 41

1.07 The Model 576**( ) 41 is the same as the Model 576**( ) 40 with the addition of a grounding pushbutton switch required in some PABX applications for transferring calls, originating calls during a power failure, and other special functions.

MODEL 577**( ) 40

1.08 The Model 577**( ) 40 is the same as the Model 576**( ) 40 with the addition of a manual exclusion switch. This exclusion switch is factory wired to line 1 and disconnects any other telephone on the line for confidential conversation. Lifting the left hand cradle plunger activates the exclusion switch.

2. PUSHBUTTON KEYS

2.01 The six pushbutton keys of the key assembly are arranged in pairs, one pair for each line. The right hand key of each pair is the line or pickup key; the left hand key of each pair is the hold key.

TCI Library: www.telephonecollectors.info

2.02 The three line keys are interlocking so that only one line may be picked up at one time. However, one or more lines may be placed on hold at one time. Each pair of keys is interlocking. Any operated hold key will be released when its line key is pressed. Restoring the handset will also release any operated hold key.

2.03 The right hand pair of keys may be adapted for manual or dial selective intercom. For these modifications, refer to part 9 of this document.

3. OPERATOR RECALL BUTTON

3.01 Since the cradle plunger will release any operated hold key when pressed, a method other than flashing the hookswitch must be used for operator signaling. A special pushbutton switch is installed for this purpose. This pushbutton (located just forward of the handset cradle) is also used to obtain dial tone when momentarily pressed. The operator recall button has normally closed contacts.

4. GROUNDING PUSHBUTTON

4.01 Telephone sets with feature code 41 include a grounding pushbutton switch required in some PABX applications for transferring calls, originating calls during a power failure, and other special functions. This grounding pushbutton has normally open contacts.

5. VISUAL SIGNALS

5.01 A neon lamp under each line key indicates an incoming call. An incandescant lamp under each hold key indicates a held or busy line. A 10-volt power source is required for operation of the incandescent lamps. The neon lamps are operated by ringing voltage on the line.

6. OPERATION

6.01 During the ringing cycle, the neon lamp associated with the called line will flash and the ringer will audibly signal that a call is to be answered on that line. To answer the call, the handset is removed from the cradle and the appropriate line pickup key is pressed.

Note: The ringer is factory wired to line 1. An extension ringer, common audible signal unit, or second and third telephones must be used for the second and third incoming lines.

6.02 To make an outgoing call, remove the handset from the cradle, press the appropriate line pickup key and dial the desired number.

6.03 Any line that is picked up may be placed on hold by simply pressing the associated hold key. To return to a line on hold, press the line pickup key again. The hold key will be released and any other line key that is pressed will be released. Any operated hold key will automatically be released when the handset is placed in the cradle.

7. OPTIONAL ARRANGEMENTS

7.01 Three types of arrangements are possible with 3-line telephones. The first arrangement is for three CO lines without intercom. The second arrangement is for two CO lines and manual intercom. The third arrangement is for two CO lines and dial intercom (rotary dial only).

7.02 A different power supply is recommended for each arrangement. An ITT 41-101 Power Transformer (9 VAC output) is recommended for the first arrangement. A commercial power supply with outputs of 9 VDC, 10 VAC and a signaling voltage (Lorain T-16A or equivalent) is recommended for the second arrangement. A key system type power supply is recommended for the third arrangement, which uses a 307A rotary, dial-selective intercom circuit. The power requirements for a 307A circuit are -24 VDC, 10 VAC and if ringing voltage is required, 105 VAC, 30 Hz. (See Figure 2.)

Note: It is recommended that no more than five telephones be connected in parallel.

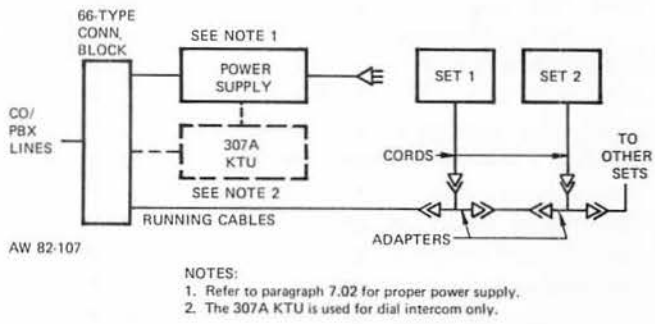

Figure 2: Optional Arrangements for 3-Line Telephones

TCI Library: www.telephonecollectors.info

8. INSTALLATION

8.01 Mount a 66-type connecting block to a wall or panel convenient to a 110 VAC wall service outlet that is not controlled by a switch that could be accidentally turned off. Mount the power supply and the intercom unit (if used) near the connecting block.

8.02 Only 19 conductors are required for each station running cable. Systems with dial intercom will require one additional conductor per station. The connection chart shown in Table B is for standard 25-pair cable connections. The running cable is fanned out and terminated onto the 66-type connecting block and connected in multiple to 50-pin adapters which are installed at each station.

8.03 Since the mounting cords for these telephones are terminated in an Amphenol-type plug, installation consists of simply plugging into the appropriate cable connector or station adapter.

8.04 Installing an exclusion telephone, such as the Model 577, will necessitate changes in the connection of any excluded telephone, either within the telephone or at its connecting block assembly. Refer to part 10 of this document for exclusion phone modifications.

8.05 For manual intercom, all signaling buttons are in parallel across terminals 5 and 15 of the connecting block and all buzzers are in parallel across terminals 39 and 40. When any signaling button is pressed, all buzzers will sound. Therefore, a signaling code must be assigned to each station, such as one short; one long; two short and so forth, so each party will know when to answer an intercom call.

8.06 For dial intercom, each station requires an individual signal lead from the intercom unit to pin 20 of the 50-pin station adapter. (Spare conductors of the running cable are used for this purpose.) For example, if the intercom designated number 2 travels through the VI-BL conductor of the running cable and is connected to pin 46 of all the station adapters, remove the rear cover of the adapter and solder a strap from pin 46 to pin 20 at the station that is assigned intercom number 2. Repeat this procedure at other station adapters by strapping the pin which carries that station intercom number to pin 20 of that station adapter.

8.07 Buzzers may be used for intercom signaling with both manual and dial intercom. Connect each buzzer across the WH-YL and the WH-YL-BL leads within the telephone.

8.08 Connect the power supply as indicated using 18 AWG wire. If the power supply provides a grounding terminal, a 14 gauge ground wire should be connected from this grounding terminal to a proper earth ground such as a metal cold water pipe or ground rod.

9. INTERCOM

A. Manual Intercom

9.01 Line 3 (terminals 3T and 3R on the key terminal board) is used for manual intercom. The hold key of line 3 may be used for signaling. The signal circuit is connected at the S1 and LG terminals of the key terminal board. A power supply providing talk and signal power must be provided in the respective circuits. To convert the number 3 hold key to the signaling mode, unscrew the interlock screw from the hold plunger approximately 8 turns, until it clears the interlock slides. Insert the helical spring (provided with the telephone under the head of the interlock screw) as shown in Figure 3.

B. Dial-Selective Intercom

9.02 Line 3 is generally used as the intercom line. A 307A KTU selector unit and a power supply are connected to the system at one of the connecting blocks. A buzzer must be provided at each telephone. (Refer to KSP307-00A for installation instructions on the 307A KTU.)

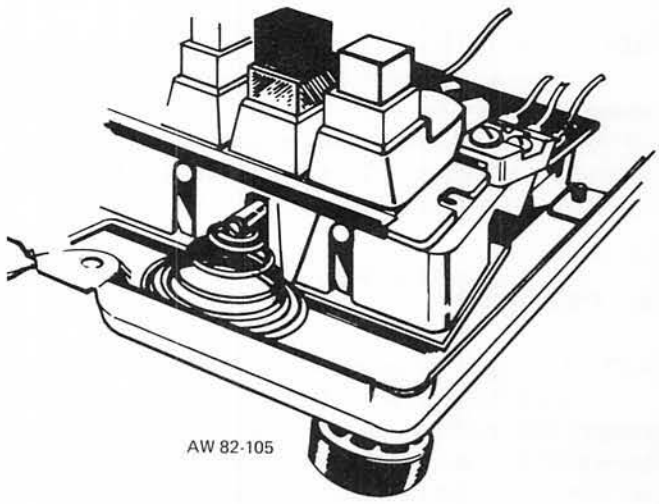

Figure 3: Hold Key To Signal Key Conversion

TCI Library: www.telephonecollectors.info

TABLE B

CONNECTION CHART FOR 3-LINE TELEPHONES

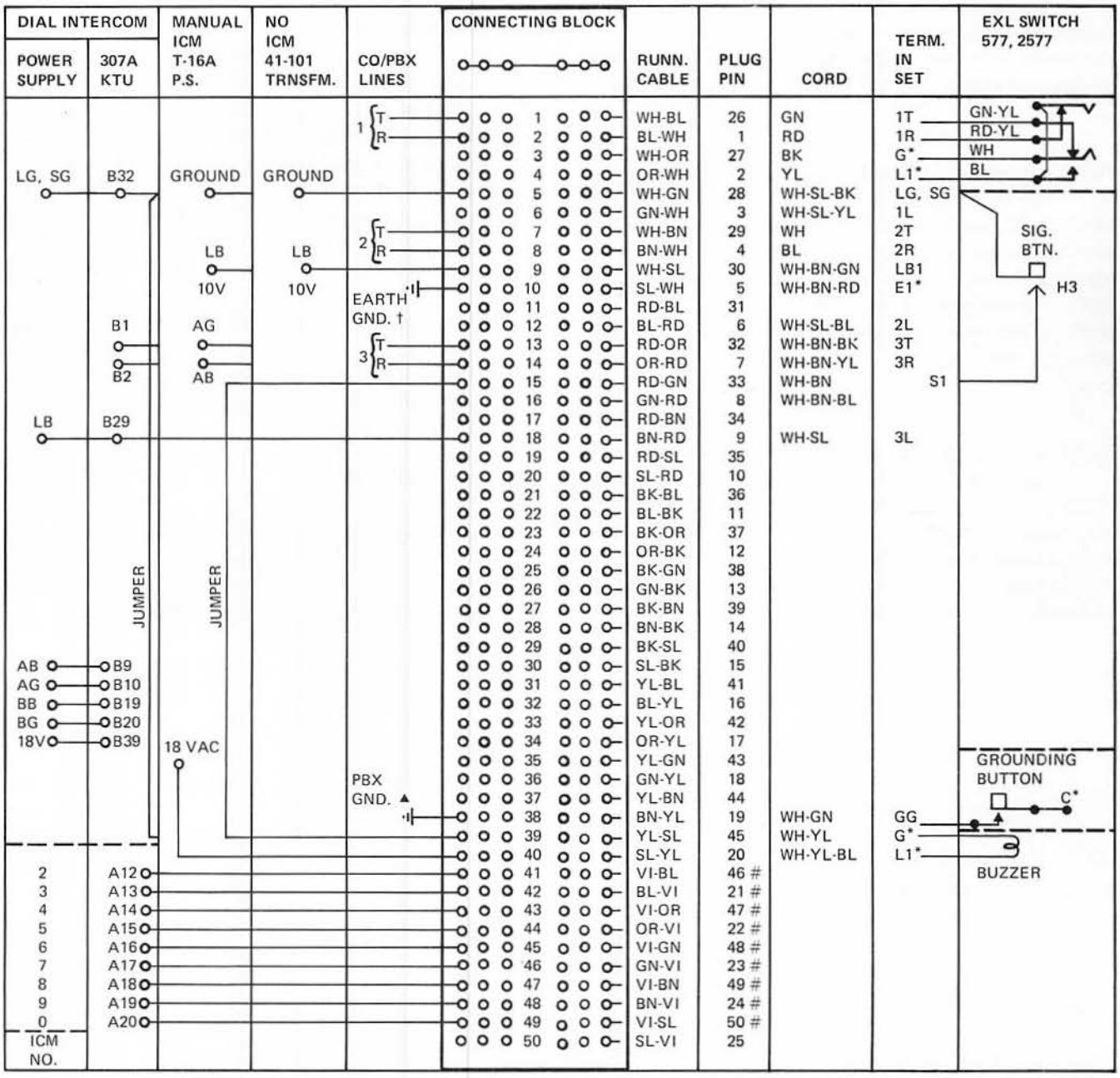

AW 82-108

* Terminals on Network. Other terminals are on Key Terminal Board.

At each Station Adapter, strap from Pin 20 to the pin which carries that station intercom number. For example, at station number 5, strap from Pin 20 to Pin 22.

† Tel-Touch Telephones Only.

▲ Strap from PBX GND. to Row 38 for Telephones equipped with Feature 41 (Grounding button).

TCI Library: www.telephonecollectors.info

10. MODIFICATIONS FOR EXCLUSION

10.01 The exclusion switch in the Model 577 telephone is normally connected to line 1. The following instructions pertain to installing a telephone with one of the lines excluded from other telephones when the exclusion switch is operated.

10.02 Connect all telephones in the normal manner. On all telephones to be excluded, remove the housing. Disconnect the RD and GN leads of the mounting cord from terminals 1R and 1T of the key terminal board. Individually tape and store these leads. Connect the YL and BK leads of the mounting cord to terminals 1R and 1T respectively of the key terminal board.

10.03 To exclude line 2 or line 3 instead of line 1, move the RD-YL and GN-YL leads of the exclusion switch from 1R and 1T respectively of the key terminal board to R and T respectively of the key terminal board for the line to be excluded. On all telephones to be excluded disconnect the leads of the mounting cord from R and T of the key terminal board for the line that is excluded and connect the YL and BK leads of the mounting cord to R and T respectively of the key terminal board.

11. RINGER WIRING

11.01 The self contained ringer is normally connected to 1R and 1T of line 1. It may be connected to another line as desired by moving the RD and BK ringer leads from 1R and 1T to 2R and 2T or 3R and 3T. Externally mounted straight line or biased type ringers (having a 0.50 Mfd 400V paper capacitor connected in series with one lead) may be connected to other lines as required.

11.02 An optional common audible signal unit (code number 144-OCA) is also available and may be installed inside the telephone in place of a ringer. This unit provides an audible signal for all three lines of the telephone.

12. MAINTENANCE

12.01 For general maintenance information, refer to the general maintenance section of ITT Telephone Apparatus Practices. For a pictorial view and parts list, refer to Section 50-576-101.

TCI Library: www.telephonecollectors.info

3-LINE, ROTARY DIAL, DESK TELEPHONES

REPLACEMENT PARTS

1. GENERAL

1.01 This document covers the 3-line, rotary dial, desk telephone. (See Figure 1.) An exploded-view drawing of the telephone with the major assembly groups (see Figure 2) and a replacement parts list (see Table A) are included.

1.02 This section is reissued to reflect changes in the 3-line, rotary dial, desk telephone and to incorporate the changes listed in the Telephone Apparatus Practices Change Notice, Section 11-510-100. Whenever this section is reissued, reason for reissue will be listed in this paragraph.

1.03 For additional information on description and installation of the telephones, refer to Section 50-576-100. The circuit labels appear in Section 50-576-102. Related documents of the ITT Telephone Apparatus Practices Manual provide information on components.

1.04 The Models 576 and 577 desk telephones are 3-line, rotary dial, desk telephones that are designed to provide access to three lines without the use of external switching equipment. Each line has its own hold key. The Models 576 and 577 are similar except for an exclusion feature included in the Model 577 telephone. These desk telephones are anti-sidetone type units that operate efficiently over a wide range of loop resistances and line impedances.

1.05 The Models 576 and 577 desk telephones are identified by a code number stamped in ink on the bottom of the base plate. Refer to Section 50-576-100 of the ITT Telephone Apparatus Practices Manual for ordering information of complete telephones and for an explanation of each code number.

AW 82-354

Figure 1: 3-Line, Rotary Dial, Desk Telephone

TCI Library: www.telephonecollectors.info

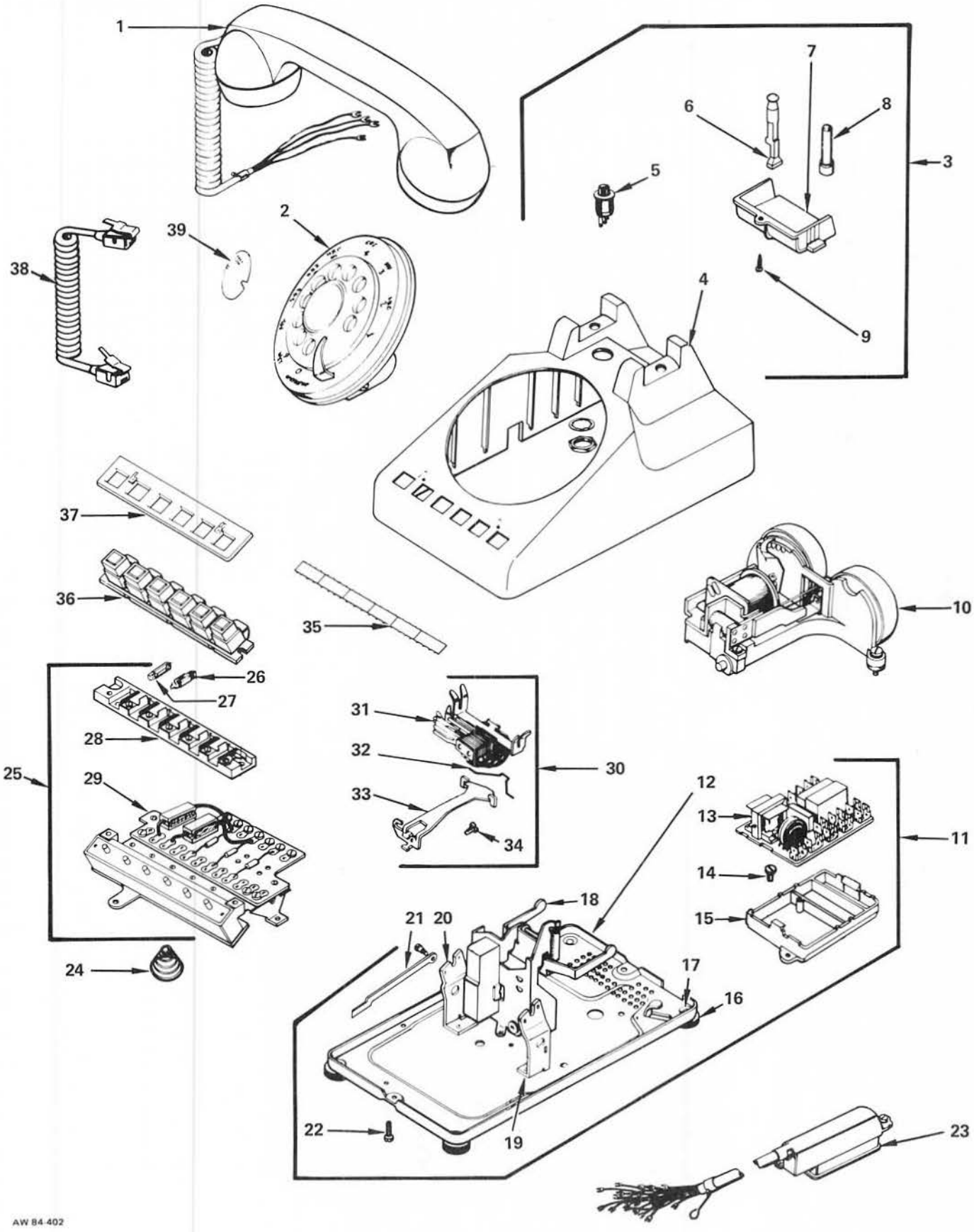

Figure 2: 3-Line, Rotary Dial, Desk Telephone, Exploded View

TCI Library: www.telephonecollectors.info

TABLE A

REPLACEMENT PARTS LIST

INDEX NO	PART NUMBER	DESCRIPTION	QUANTITY USED		
		3-Line, Rotary Dial, Desk Telephone	576/40	576/41	577/40
1	0065**-0C2	Handset Assembly, Nonmodular[1]	1	1	1
1	0065**-0M2	Handset Assembly, Modular[1]	1	1	1
2	0030**-00G	Dial Assembly, Metropolitan (Letters And Numerals)[1]	1	1	1
2	0030**-00D	Dial Assembly, Regular (Numerals Only)[1]	1	1	1
3	087489-0**	Housing And Plunger Assembly	1	–	–
3	180217-0**	Housing And Plunger Assembly	–	1	–
3	180606-0**	Housing And Plunger Assembly	–	–	1
3	187897-0**	Housing And Plunger Assembly, Full-Modular	1	–	–
3	187903-0**	Housing And Plunger Assembly, Full-Modular	–	1	–
3	187904-0**	Housing And Plunger Assembly, Full-Modular	–	–	1
4	087488-0**	Housing	1	–	1
4	180216-0**	Housing	–	1	–
4	187896-0**	Housing, Full-Modular	1	–	1
4	187902-0**	Housing, Full-Modular	–	1	–
5	181973-101	Pushbutton, Operator Recall	1	1	1
6	079982-102	Plunger, Exclusion	–	–	1
7	079097-0**	Plunger, Retainer	1	1	1
8	079101-102	Plunger, Cradle Switch	2	2	1
9	075407-102	Screw, Plunger Retainer	1	1	1
10	000130-0BA	Ringer[1]	1	1	1
11	079525-104	Base Assembly	1	1	1
12	079411-101	Plate, Base	1	1	1
13	181427-101	PC Network (#183070-101)[1]	1	1	1
14	096407-103	Screw, Network Mounting	1	1	1
15	182175-101	Spacer, Network	1	1	1
16	182337-101	Foot	4	4	4
17	082486-102	Rivet, Foot	4	4	4
18	079489-102	Cradle Switch Assembly[1]	1	1	1
	079490-101	Spring Nest Assembly (Not Shown)	1	1	1
19	087052-102	Bracket, Dial (R.H.)	1	1	1
20	087052-101	Bracket, Dial (L.H.)	1	1	1
21	190167-101	Link, Operating	1	1	1
22	075486-101	Screw, Cabinet Locking	2	2	2
23	184369-072	Cord, Mounting	1	1	1
24	086374-101	Spring, Helical	1	1	1
25	184434-101	Key And Lamp Strip Assembly	1	1	1
26	190191-101	Lamp, Neon	3	3	3
27	000051-00A	Lamp, Incandescent	3	3	3
28	190196-101	Lamp Strip Assembly	1	1	1
29	000508-101	Key Assembly	1	1	1
30	079613-101	Exclusion Switch Assembly	–	–	1
31	079614-101	Switch, Exclusion	–	–	1

TCI Library: www.telephonecollectors.info

TABLE A

REPLACEMENT PARTS LIST (Cont)

INDEX NO	PART NUMBER	DESCRIPTION	QUANTITY USED		
		3-Line, Rotary Dial, Desk Telephone	**576/40**	**576/41**	**577/40**
32	079624-101	Retainer	–	–	1
33	079605-101	Bracket	–	–	1
34	069020-103	Screw, B.H.M.	–	–	1
35	082028-101	Card, Designation	1	1	1
36	087472-103	Key Strip Assembly	1	1	1
	087471-101	Strip, Retainer	1	1	1
	087470-101	Button, Clear	3	3	3
	087470-102	Button, Red	3	3	3
	087469-101	Plunger, Retainer	1	1	1
37	087474-101	Escutcheon	1	1	1
38	9018**-072	Cord, Handset, Modular	1	1	1
39	075415-101	Card, Number	1	1	1
	600152-611 -002	Jack Assembly, Handset Cord, Modular (Not Shown)	1	1	1
	182990-105	Insulator Assembly, Modular (Not Shown)	1	1	1
	181971-102	Pushbutton, Grounding (Not Shown)	–	1	–
	000144-0CA	Common Audible Signal Unit (Not Shown)			
	000041-101	Transformer (Not Shown)			

AW 84-573

NOTES:

1 Refer to Component Parts Section of this manual for Assembly Parts List.
** Substitute 2-digit color code when ordering.

TCI Library: www.telephonecollectors.info

3-LINE, ROTARY DIAL, DESK TELEPHONES

CIRCUIT LABELS

1. GENERAL

1.01 This document covers the 3-line, rotary dial, desk telephones. (See Figure 1.) The circuit labels for the various models of 3-line, rotary dial, desk telephones and the associated features available in each are included. (See Table A.)

AW 86-339

Figure 1: 3-Line, Rotary Dial, Desk Telephone

1.02 This section is reissued to provide the latest issue of circuit labels for the following 3-line, rotary dial, desk telephones:

(a) Model 576, Types 40 and 41

(b) Model 577, Type 40

Issue 2 of this section provided the circuit label for Model 576 Types 40 and 41 at issue 3 and the Model 577 Type 40 at issue 4.

1.03 For additional information on description and installation of the telephones, refer to Section 50-576-100. A replacement parts list and an exploded-view drawing for the telephones are contained in Section 50-576-101. Related documents of the ITT Telephone Apparatus Practices Manual provide information on components.

1.04 The Models 576 and 577 desk telephones are 3-line, rotary dial, desk telephones designed to provide access to three lines without the use of external switching equipment. Each line has its own hold key. The Models 576 and 577 are similar except for an exclusion feature included in the Model 577 telephones. The Models 576 and 577 telephones are anti-sidetone type units that operate efficiently over a wide range of loop resistances and line impedances.

1.05 The Models 576 and 577 desk telephones are identified by a code number stamped in ink on the bottom of the base plate. Refer to Section 50-576-100 of the ITT Telephone Apparatus Practices Manual for ordering information of complete telephones and for an explanation of each code number.

TABLE A

LIST OF CIRCUIT LABELS

MODEL NO	TYPE NO	FIGURE NO
576	40, 41	2
577	40	3

AW 86-334

TCI Library: www.telephonecollectors.info

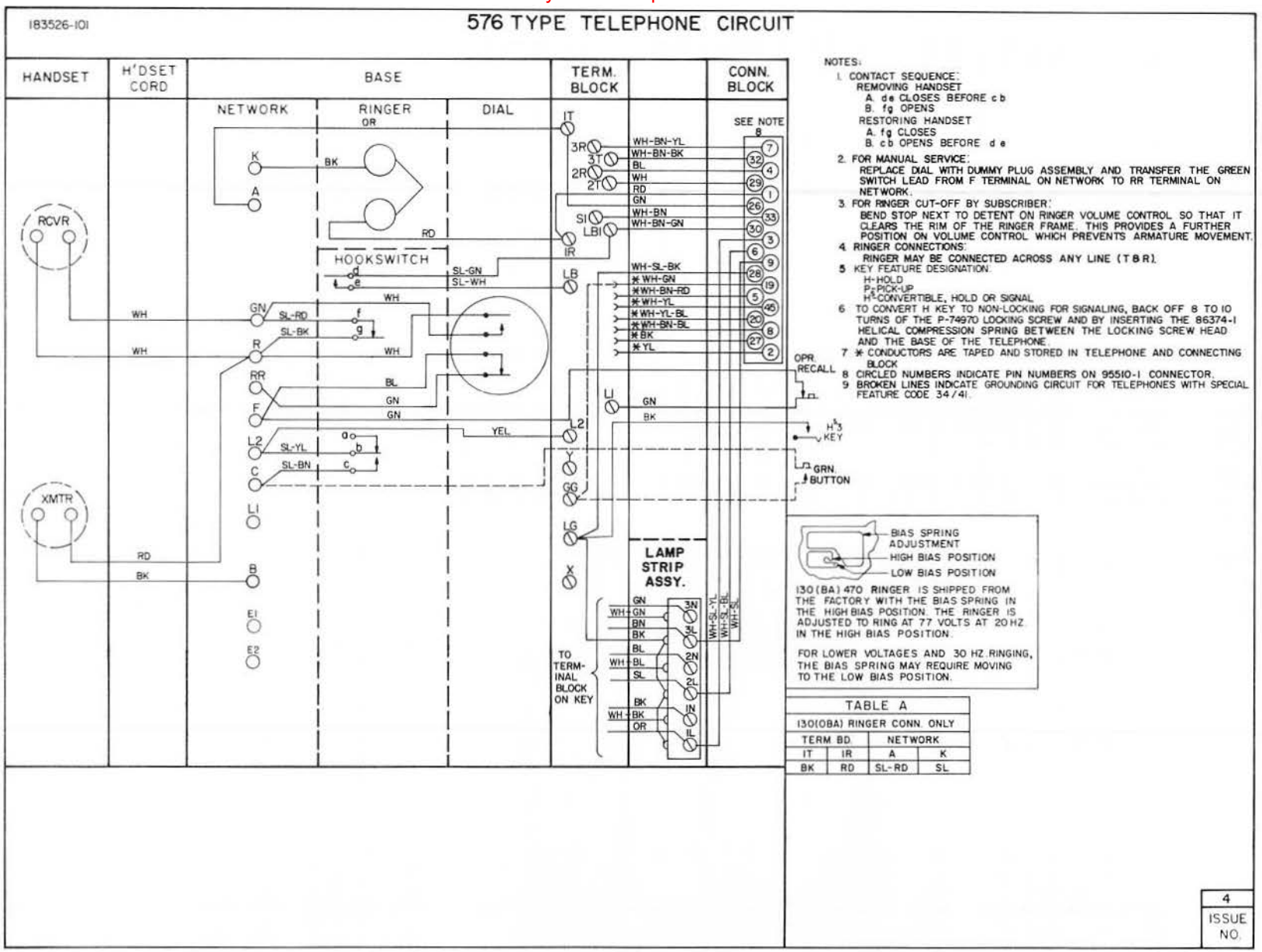

Figure 2: Circuit Label, Model 576 Types 40, 41

TCI Library: www.telephonecollectors.info

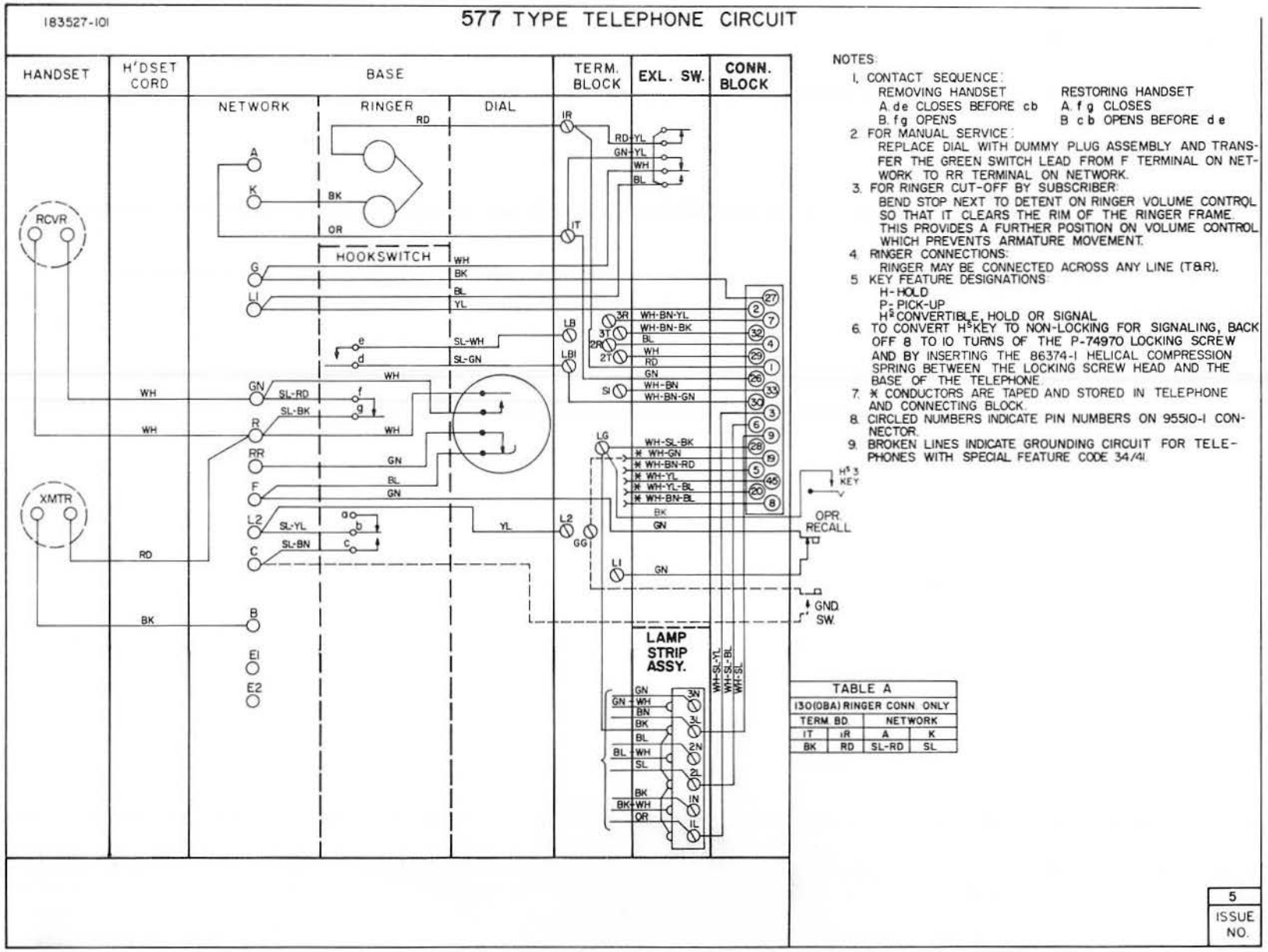

Figure 3: Circuit Label, Model 577 Type 40

TCI Library: www.telephonecollectors.info

3-LINE, PUSHBUTTON DIAL, DESK TELEPHONES
GENERAL DESCRIPTION

CONTENTS PAGE

1. GENERAL DESCRIPTION 1
MODEL 2576**( ) 40 2
MODEL 2576**( ) 41 2
MODEL 2577**( ) 40 2
2. PUSHBUTTON KEYS 2
3. OPERATOR RECALL BUTTON 3
4. GROUNDING PUSHBUTTON 3
5. VISUAL SIGNALS 3
6. OPERATION 3
7. OPTIONAL ARRANGEMENTS 3
8. INSTALLATION 4
9. INTERCOM 4
A. Manual Intercom 4
B. Dial-Selective Intercom 4
10. MODIFICATIONS FOR EXCLUSION ... 6
11. RINGER WIRING 6
12. MAINTENANCE 6

AW 82-355

Figure 1: 3-Line, Pushbutton Dial, Desk Telephone

1. GENERAL DESCRIPTION

1.01 This document covers the 3-line, pushbutton dial, desk telephone. (See Figure 1.) A general description as well as information that is peculiar to 3-line, pushbutton dial, desk telephones is included.

1.02 This section is reissued to correct errors in the previous issue. Whenever this section is reissued, reason for reissue will be listed in this paragraph.

1.03 For additional information on replacement parts and for an exploded-view drawing for the telephones, refer to Section 50-576-104. The circuit labels appear in Section 50-576-105. Related documents of the ITT Telephone Apparatus Practices Manual provide information on components.

1.04 The Models 2576 and 2577 desk telephones are 3-line, pushbutton dial, desk telephones designed to provide access to three lines without the use of external switching equipment. Each line has its own hold key. The Models 2576 and 2577 desk telephones are similar except for an exclusion feature included in the Model 2577. These telephones are anti-sidetone type units that operate efficiently over a wide range of loop resistances and line impedances.

1.05 The Models 2576 and 2577 desk telephones are identified by a code number stamped in ink on the bottom of the base plate. Refer to ordering information in Table A for an explanation of each code number and a list of available versions and features.

TCI Library: www.telephonecollectors.info

TABLE A

ORDERING INFORMATION – TELEPHONES

CODE NUMBERS

TELEPHONE CODE NUMBERS ARE FORMED IN SIX STEPS AS FOLLOWS:

2576 15 O BA 40 M

(1) Type of Instrument (See Part 1)
(2) Color (See Part 2)
(3) Version (See Part 3)
(4) Ringer (See Part 4)
(5) Special Feature (See Part 5)
(6) Dial (See Part 6)

PART 1 TYPE OF INSTRUMENT

CODE	DESCRIPTION	COLOR OFFERED	VERSION OFFERED	RINGER OFFERED	FEATURE OFFERED	DIAL OFFERED
2576	3-Line Pushbutton Dial	00, 05, 09, 13, 15, 44, and 45 (Available On All Models)	O	BA, LR	40, 41	M, R
2577	3-Line Pushbutton Dial W/Exclusion		O	BA, LR	40	M, R

REFER TO INDIVIDUAL UNIT DESCRIPTION FOR COMPLETE DESCRIPTION OF FEATURE COMBINATIONS

PART 2 COLORS		PART 3 VERSIONS		PART 4 RINGERS		PART 5 SPECIAL FEATURES		PART 6 DIALS	
CODE	COLORS	CODE	VERSIONS	CODE	RINGERS	CODE	SPECIAL FEATURES	CODE	DIAL
00	Black	O	Conventional	LR	Less Ringer	40	No Special Feature	M	Metropolitan (Letters & Numerals)
05	Moss Green			BA	Straight-Line	41	40 Combined with Push-button for Grounding		
09	Ivory								
13	Beige							R	Regular (Numerals Only)
15	White								
44	Light Ash								
45	Cocoa Brown								

AW 82 275

1.06 The Model 2576 and the Model 2577 desk telephones are described in the following paragraphs. Circuit labels for these models are included in Section 50-576-105.

MODEL 2576( ) 40**

1.07 The Model 2576**( ) 40 is a 3-line, pushbutton dial, desk telephone. It provides no additional outstanding features and is fitted with a 19-conductor mounting cord terminated in an Amphenol-type plug.

MODEL 2576( ) 41**

1.08 The Model 2576**( ) 41 is the same as the Model 2576**( ) 40 with the addition of a grounding pushbutton switch required in some PABX applications for transferring calls, originating calls during a power failure, and other special functions.

MODEL 2577( ) 40**

1.09 The Model 2577**( ) 40 is the same as the Model 2576**( ) 40 with the addition of a manual exclusion switch. This exclusion switch is factory-wired to line 1 and disconnects any other telephone on the line to permit confidential conversation. Lifting the left-hand cradle plunger activates the exclusion switch.

2. PUSHBUTTON KEYS

2.01 The six pushbutton keys of the key assembly are arranged in pairs, one pair for each line. The right-hand key of each pair is the line or

TCI Library: www.telephonecollectors.info

pickup key; the left-hand key of each pair is the hold key.

2.02 The three line keys are interlocking so that only one line may be picked up at any one time. However, one or more lines may be placed on hold at any one time. Each pair of keys is interlocking. Any operated hold key will be released when its line key is pressed. Restoring the handset will also release any operated hold key.

2.03 The right-hand pair of keys may be adapted for manual intercom. For this modification, refer to paragraph 9 of this document.

3. OPERATOR RECALL BUTTON

3.01 Since the cradle plunger will release any operated hold key when pressed, a method other than flashing the hookswitch must be used to signal the operator. A special pushbutton is installed for this purpose. This pushbutton (located just forward of the handset cradle) is also used to obtain dial tone when momentarily pressed. The operator recall button has normally-closed contacts.

4. GROUNDING PUSHBUTTON

4.01 Telephone sets with feature code 41 include a grounding pushbutton switch required in some PABX applications for transferring calls, originating calls during a power failure, and other special functions. This grounding pushbutton switch has normally-open contacts.

5. VISUAL SIGNALS

5.01 A neon lamp under each line key indicates an incoming call. An incandescant lamp under each hold key indicates a held line or a busy line. A 10VAC power source is required for operation of the incandescent lamps. The neon lamps are operated by ringing voltage on the line.

6. OPERATION

6.01 During the ringing cycle, the neon lamp for the called line will flash, and the ringer (if connected to that line) will audibly signal that a call is to be answered. To answer the call, the handset is removed from the cradle and the appropriate line pickup key is pressed.

Note: The ringer is factory-wired to line 1. An extension ringer, common audible signal unit, or second and third telephone must be used for the second and third incoming line.

6.02 To make an outgoing call, remove the handset from the cradle, press the appropriate line pickup key and dial the desired number.

6.03 Any line that is picked up may be placed on hold by pressing the hold key for that line. To return to a line on hold, press the line pickup key again. The hold key will be released and any other line key that is pressed will be released. Any operated hold key will automatically be released when the handset is placed in the cradle.

7. OPTIONAL ARRANGEMENTS

7.01 Three types of arrangements are possible with 3-line telephones. The first arrangement is for three CO lines without intercom. The second arrangement is for two CO lines and manual intercom. The third arrangement is for two CO lines and dial-selective intercom equipped for Tel-Touch operation.

7.02 A different power supply is recommended for each arrangement. An ITT 41-101 Power Transformer (9 VAC output) is recommended for the first arrangement. A commercial power supply with outputs of 9 VDC, 10 VAC, and a signaling voltage (Lorain T-16A or equivalent) is recommended for the second arrangement. A key system type power supply is recommended for the third arrangement, which uses a 307A rotary, dial-selective intercom circuit (or other dial-selective intercom circuit) equipped for Tel-Touch operation. The power requirements for a 307A circuit are −24 VDC, 10 VAC, and if ringing voltage is required, 105 VAC, 30 Hz. (See Figure 2.)

Note: It is recommended that no more than five telephones be connected in parallel.

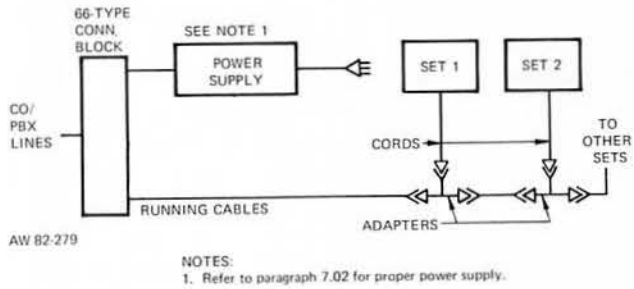

Figure 2: Optional Arrangements for 3-Line Telephones

TCI Library: www.telephonecollectors.info

8. INSTALLATION

8.01 Mount a 66-type connecting block to a wall or panel convenient to a 110 VAC wall service outlet that is not controlled by a switch that could be accidentally turned off. Mount the power supply near the connecting block.

8.02 Only 19 conductors are required for each station running cable. The connection chart shown in Table B is for standard 25-pair cable connections. The running cable is fanned out and terminated onto the 66-type connecting block and connected in multiple to 50-pin adapters which are installed at each station.

8.03 Since the mounting cords for these telephones are terminated in an Amphenol-type plug, installation consists of simply plugging into the appropriate cable connector or station adapter.

8.04 Installing an exclusion telephone, such as the Model 2577, will necessitate changes in the connection of any excluded telephone, either within the telephone or at its connecting block assembly. Refer to paragraph 10 of this document for exclusion telephone modifications.

8.05 For manual intercom, all signaling buttons are in parallel across terminals 5 and 15 of the connecting block, and all buzzers are in parallel across terminals 39 and 40. When any signaling button is pressed, all buzzers will sound. Therefore, a signaling code must be assigned to each station, such as one short, one long, two short, and so forth, so each party will know when to answer an intercom call.

8.06 For dial-selective intercom, each station requires an individual signal lead from the intercom unit to pin 20 of the 50-pin station adapter. (Spare conductors of the running cable are used for this purpose.) For example, if the intercom designated number 2 travels through the VI-BL conductor of the running cable and is connected to pin 46 of all the station adapters, remove the rear cover of the adapter and solder a strap from pin 46 to pin 20 at the station that is assigned intercom number 2. Repeat this procedure at other station adapters by strapping the pin which carries that station intercom number to pin 20 of that station adapter.

8.07 Buzzers may be used for intercom signaling with both manual and dial intercom. Connect each buzzer across the WH-YL and the WH-YL-BL leads within the telephone.

8.08 Connect the power supply as indicated using 18 AWG wire. If the power supply provides a grounding terminal, a 14 gauge ground wire should be connected from this grounding terminal to a proper earth ground such as a metal cold water pipe or ground rod.

9. INTERCOM

A. Manual Intercom

9.01 Line 3 (terminals 3T and 3R on the key terminal board) is used for manual intercom. The hold key of line 3 may be used for signaling. The signal circuit is connected at the S1 and LG terminals of the key terminal board. A power supply providing talk and signal power must be provided in the respective circuits. To convert the number 3 hold key to the signaling mode, unscrew the interlock screw from the hold plunger approximately eight turns, until it clears the interlock slides. Insert the helical spring (provided with the telephone under the head of the interlock screw) as shown in Figure 3.

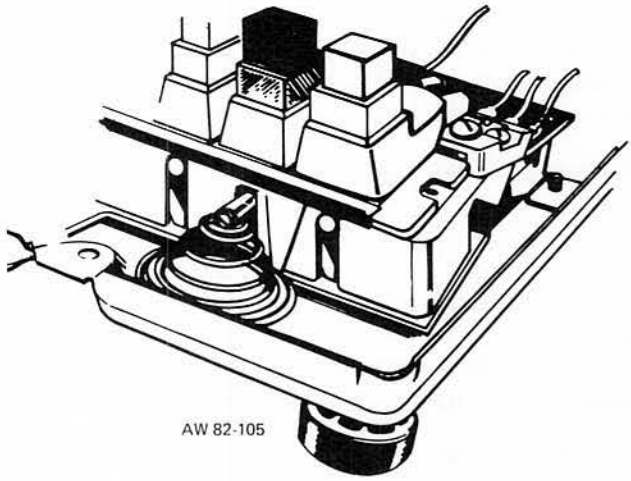

Figure 3: Hold Key To Signal Key Conversion

B. Dial-Selective Intercom

9.02 Line 3 is generally used as the intercom line. A 307A KTU equipped for Tel-Touch operation and a power supply are connected to the system at one of the connecting blocks. A buzzer must be

TCI Library: www.telephonecollectors.info

TABLE B

CONNECTION CHART FOR 3-LINE TELEPHONES

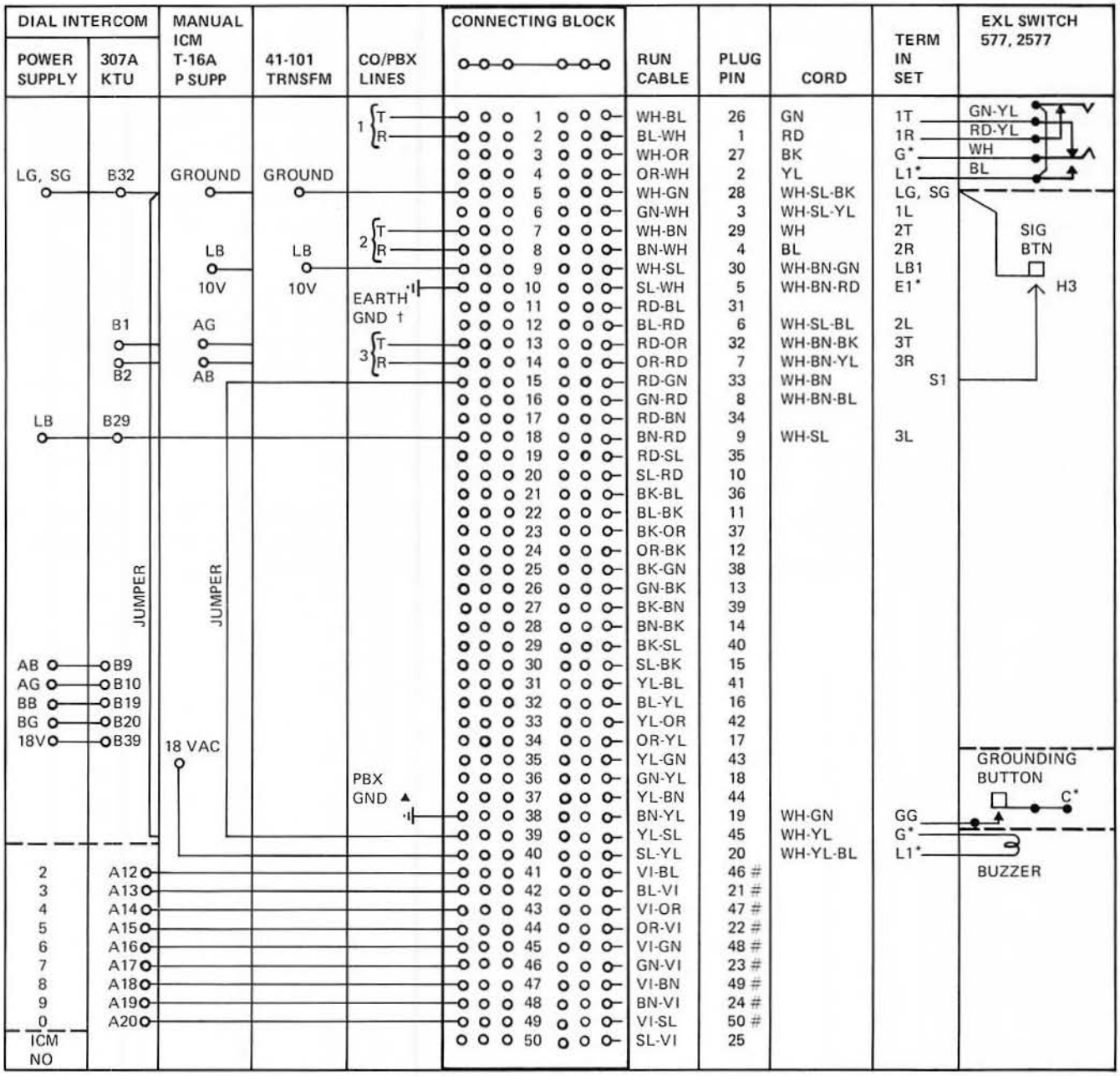

AW 82-108

* Terminals on Network. Other terminals are on Key Terminal Board.

At each Station Adapter, strap from Pin 20 to the pin which carries that station intercom number. For example, at station number 5, strap from Pin 20 to Pin 22.

† Tel-Touch Telephones Only.

▲ Strap from PBX GND to Row 38 for Telephones equipped with Feature 41 (Grounding button).

TCI Library: www.telephonecollectors.info

provided at each telephone. (Refer to 36-307-101 for installation instructions on the 307A KTU.)

10. MODIFICATIONS FOR EXCLUSION

10.01 The exclusion switch in the Model 2577 telephone is normally connected to line 1. The following instructions pertain to installing a telephone with one of the lines excluded from other telephones when the exclusion switch is operated.

10.02 Connect all telephones in the normal manner. On all telephones to be excluded, remove the housing. Disconnect the RD and GN leads of the mounting cord from terminals 1R and 1T of the key terminal board. Individually tape and store these leads. Connect the YL and BK leads of the mounting cord to terminals 1R and 1T, respectively, of the key terminal board.

10.03 To exclude line 2 or line 3 instead of line 1, move the RD-YL and GN-YL leads of the exclusion switch from 1R and 1T of the key terminal board to R and T, respectively, of the key terminal board for the line to be excluded. On all telephones to be excluded, disconnect the leads of the mounting cord from R and T of the key terminal board for the line that is excluded, and connect the YL and BK leads of the mounting cord to R and T, respectively, of the key terminal board.

11. RINGER WIRING

11.01 The self-contained ringer is normally connected to 1R and 1T of line 1. It may be connected to another line by moving the RD and BK ringer leads from 1R and 1T to 2R and 2T or 3R and 3T. Externally-mounted straight-line ringers, or biased-type ringers (having a 0.50 Mfd 400V paper capacitor connected in series with one lead) may be connected to other lines as required.

11.02 An optional common audible signal unit (code number 144-OCA) is also available and may be installed inside the telephone in place of a ringer. This unit provides an audible signal for all three lines of the telephone.

12. MAINTENANCE

12.01 For replacement parts information and for an exploded-view drawing of major assembly groups, refer to Section 50-576-104.

TCI Library: www.telephonecollectors.info

3-LINE, PUSHBUTTON DIAL, DESK TELEPHONES

REPLACEMENT PARTS

1. GENERAL

1.01 This document covers the 3-line, pushbutton dial, desk telephone. (See Figure 1.) An exploded-view drawing of the telephone with the major assembly groups (see Figure 2) and a replacement parts list (see Table A) are included.

1.02 This section is reissued to reflect changes in the 3-line, pushbutton dial, desk telephone and to incorporate the changes listed in the Telephone Apparatus Practices Change Notice, Section 11-510-100. Whenever this section is reissued, reason for reissue will be listed in this paragraph.

1.03 For additional information on description and installation of the telephones, refer to Section 50-576-103. The circuit labels appear in Section 50-576-105. Related documents of the ITT Telephone Apparatus Practices Manual provide information on components.

1.04 The Models 2576 and 2577 desk telephones are 3-line, pushbutton dial, desk telephones that are designed to provide access to three lines without the use of external switching equipment. Each line has its own hold key. The Models 2576 and 2577 desk telephones are similar except for an exclusion feature included in the Model 2577 telephone. These desk telephones are anti-sidetone type units that operate efficiently over a wide range of loop resistances and line impedances.

1.05 The Models 2576 and 2577 desk telephones are identified by a code number stamped in ink on the bottom of the base plate. Refer to Section 50-576-103 of the ITT Telephone Apparatus Practices Manual for ordering information of complete telephones and for an explanation of each code number.

AW 82-355

Figure 1: 3-Line, Pushbutton Dial, Desk Telephone

TCI Library: www.telephonecollectors.info

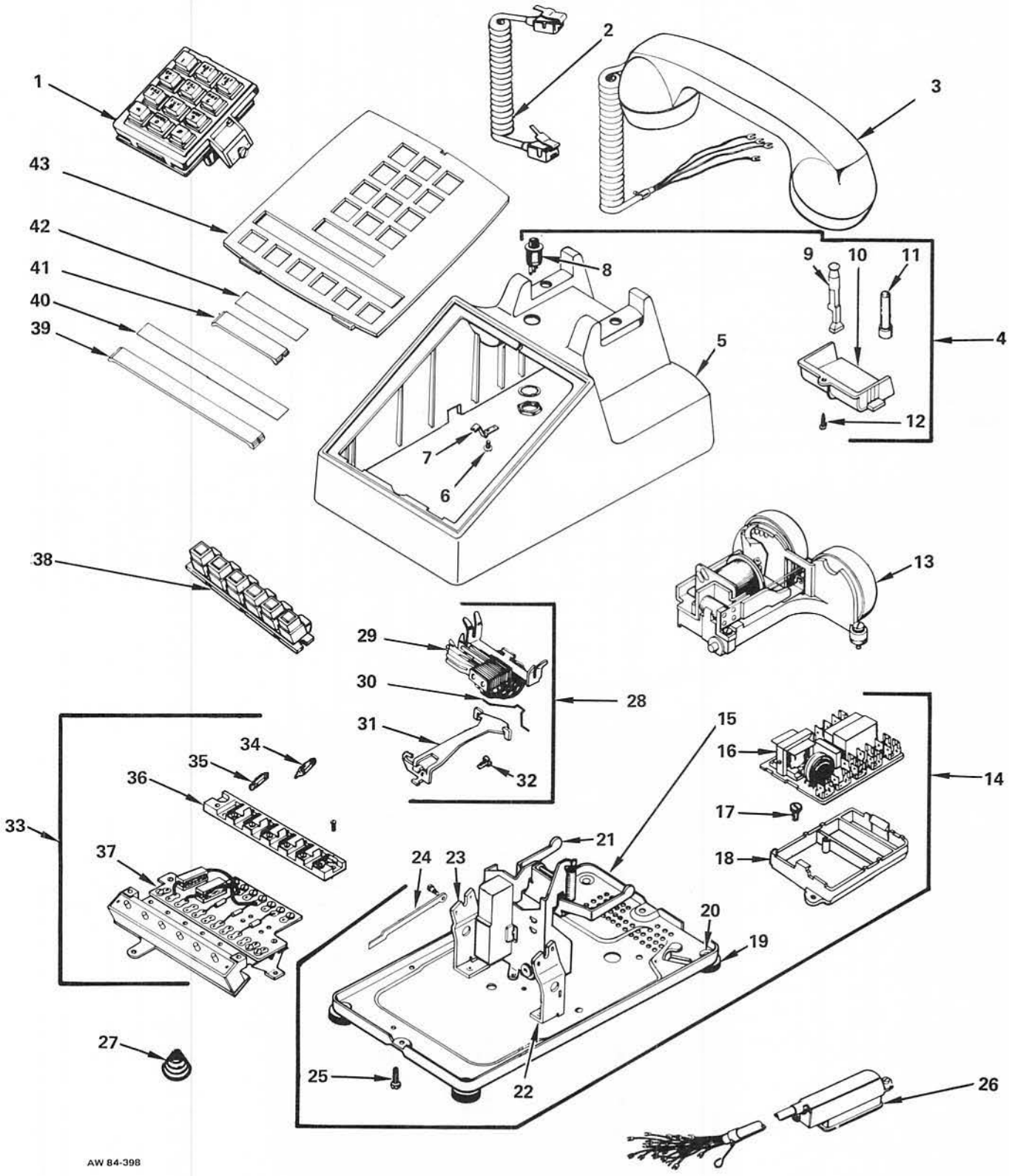

Figure 2: 3-Line, Pushbutton Dial, Desk Telephone, Exploded View

TCI Library: www.telephonecollectors.info

TABLE A

REPLACEMENT PARTS LIST

INDEX NO	PART NUMBER	DESCRIPTION	QUANTITY USED		
		3-Line, Pushbutton Dial, Desk Telephone	2576/40	2576/41	2577/40
1	004200-0PG	Dial Assembly, Pushbutton Digital, Metropolitan (Letters And Numerals)[1]	1	1	1
1	004200-0PD	Dial Assembly, Pushbutton Digital, Regular (Numerals Only)[1, 2]	1	1	1
1	003200-0PD	Dial Assembly, Pushbutton Tel-Touch, Regular (Numerals Only)[1, 3]	1	1	1
1	006300-0PG	Dial Assembly, Tel-Pulse, Metropolitan (Letters And Numerals)[1, 3]	1	—	—
2	9018**-072	Cord, Handset, Modular	1	1	1
	600152-611 -002	Jack Assembly, Handset Cord, Modular (Not Shown)	1	1	1
	182990-105	Insulator Assembly, Modular (Not Shown)	1	1	1
3	0065**-0C2	Handset Assembly, Nonmodular[1]	1	1	1
3	0065**-0M2	Handset Assembly, Modular[1]	1	1	1
4	180158-0**	Housing And Plunger Assembly	1	1	—
4	180607-0**	Housing And Plunger Assembly	—	—	1
4	187901-0**	Housing And Plunger Assembly, Full-Modular	1	1	—
4	187905-0**	Housing And Plunger Assembly, Full-Modular	—	—	1
5	180156-0**	Housing	1	1	1
5	187900-0**	Housing, Full-Modular	1	1	1
6	181289-101	Screw, Faceplate Clip	1	1	1
7	086143-101	Clip, Faceplate	1	1	1
8	181973-101	Pushbutton, Operator Recall	1	1	1
9	079982-102	Plunger, Exclusion	—	—	1
10	079097-0**	Plunger, Retainer	1	1	1
11	079101-102	Plunger, Cradle Switch	2	2	1
12	075407-102	Screw, Plunger Retainer	1	1	1
13	000130-0BA	Ringer[1]	1	1	1
14	079525-110	Base Assembly	1	1	1
15	079411-101	Plate, Base	1	1	1
16	181427-102	PC Network (#183070-102)[1]	1	1	1
17	096407-103	Screw, Network Mounting	1	1	1
18	182175-101	Spacer, Network	1	1	1
19	182337-101	Foot	4	4	4
20	082486-102	Rivet, Foot	4	4	4
21	079489-102	Cradle Switch Assembly[1]	1	1	1
	079490-101	Spring Nest Assembly (Not Shown)	1	1	1
22	087511-101	Bracket, Dial (R.H.)	1	1	1
23	087511-102	Bracket, Dial (L.H.)	1	1	1
24	190167-101	Link, Operating	1	1	1
25	075486-101	Screw, Cabinet Locking	1	1	1
26	184369-072	Cord, Mounting	1	1	1
27	086374-101	Spring, Helical	1	1	1

TCI Library: www.telephonecollectors.info

TABLE A

REPLACEMENT PARTS LIST (Cont)

INDEX NO	PART NUMBER	DESCRIPTION	QUANTITY USED		
		3-Line, Pushbutton Dial, Desk Telephone	**2576/40**	**2576/41**	**2577/40**
28	079613-101	Exclusion Switch Assembly	–	–	1
29	079614-101	Switch, Exclusion	–	–	1
30	079624-101	Retainer	–	–	1
31	079605-101	Bracket	–	–	1
32	069020-103	Screw, B.H.M.	–	–	1
33	184434-101	Key And Lamp Assembly	1	1	1
34	190191-101	Lamp, Neon	3	3	3
35	000051-00A	Lamp, Incandescent	3	3	3
36	190196-101	Lamp Strip Assembly	1	1	1
37	000508-101	Key Assembly	1	1	1
38	087472-103	Key Strip Assembly	1	1	1
	087471-101	Strip, Retainer	1	1	1
	087470-101	Button, Clear	3	3	3
	087470-102	Button, Red	3	3	3
	087469-101	Plunger, Retainer	1	1	1
39	088522-101	Retainer, Designation Card	1	1	1
40	082028-101	Card, Designation	1	1	1
41	087514-101	Retainer, Number Card	1	1	1
42	087513-101	Card, Number	1	1	1
42	087513-102	Card, Number, Strip Of 6 (Not Shown)[4]	–	–	–
43	180148-0**	Faceplate	1	–	1
43	180622-0**	Faceplate	–	1	–
	181971-102	Pushbutton, Grounding (Not Shown)	–	1	–
	000144-0CA	Common Audible Signal Unit (Not Shown)			
	000041-101	Transformer (Not Shown)			

NOTES:

1 Refer to Component Parts Section of this manual for Assembly Parts List.
2 The 004200-0PD dial replaces the 003200-0PD dial.
3 These products have been discontinued, but are included to provide a source of information for telephones still in service.
4 These parts must be ordered separately.
** Substitute 2-digit color code when ordering.

AW 84-589

TCI Library: www.telephonecollectors.info

3-LINE, PUSHBUTTON DIAL, DESK TELEPHONES

CIRCUIT LABELS

1. GENERAL

1.01 This document covers the 3-line, pushbutton dial, desk telephones. (See Figure 1.) The circuit labels for the various models of 3-line, pushbutton dial, desk telephones and the associated features available in each are included. (See Table A.)

AW 86-340

Figure 1: 3-Line, Pushbutton Dial, Desk Telephone

1.02 This section is reissued to provide the latest issue of circuit labels for the following 3-line, pushbutton dial, desk telephones:

(a) Model 2576, Types 40 and 41

(b) Model 2577, Type 40

Issue 2 of this section provided the circuit label for Model 2576 Types 40 and 41 at issue 3 and for Model 2577 Type 40 at issue 3.

1.03 For additional information on description and installation of the telephones, refer to Section 50-576-103. A replacement parts list and an exploded-view drawing for the telephones are contained in Section 50-576-104. Related documents of the ITT Telephone Apparatus Practices Manual provide information on components.

1.04 The Models 2576 and 2577 desk telephones are 3-line, pushbutton dial, desk telephones designed to provide access to three lines without the use of external switching equipment. Each line has its own hold key. The Models 2576 and 2577 desk telephones are similar except for an exclusion feature included in the Model 2577. These desk telephones are anti-sidetone type units that operate efficiently over a wide range of loop resistances and line impedances.

1.05 The Models 2576 and 2577 desk telephones are identified by a code number stamped in ink on the bottom of the base plate. Refer to Section 50-576-103 of the ITT Telephone Apparatus Practices Manual for ordering information of complete telephones and for an explanation of each code number.

TABLE A

LIST OF CIRCUIT LABELS

MODEL NO	TYPE NO	FIGURE NO
2576	40, 41	2
2576	40T	3
2577	40	4

AW 86-333

TCI Library: www.telephonecollectors.info

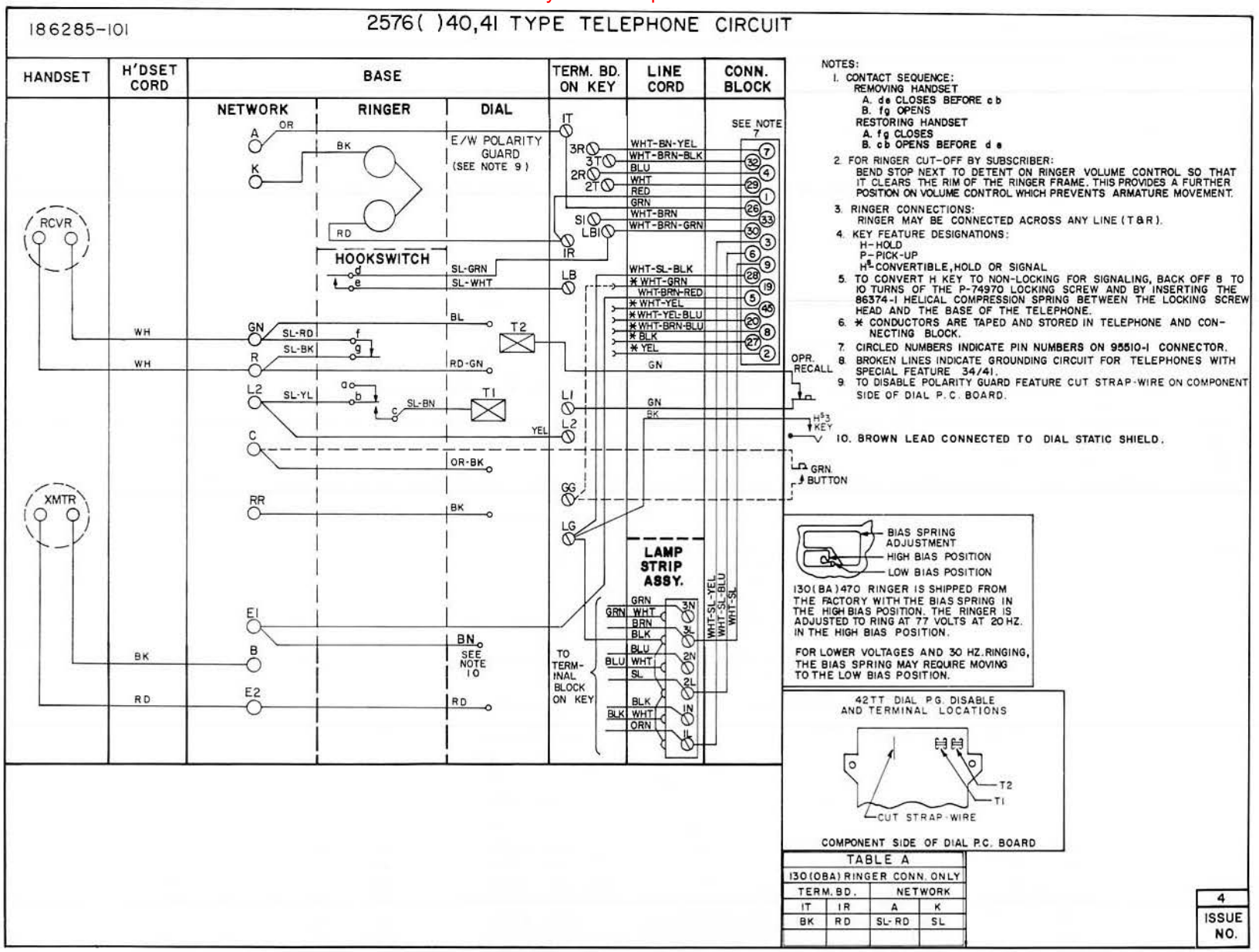

Figure 2: Circuit Label, Model 2576 Types 40, 41

TCI Library: www.telephonecollectors.info

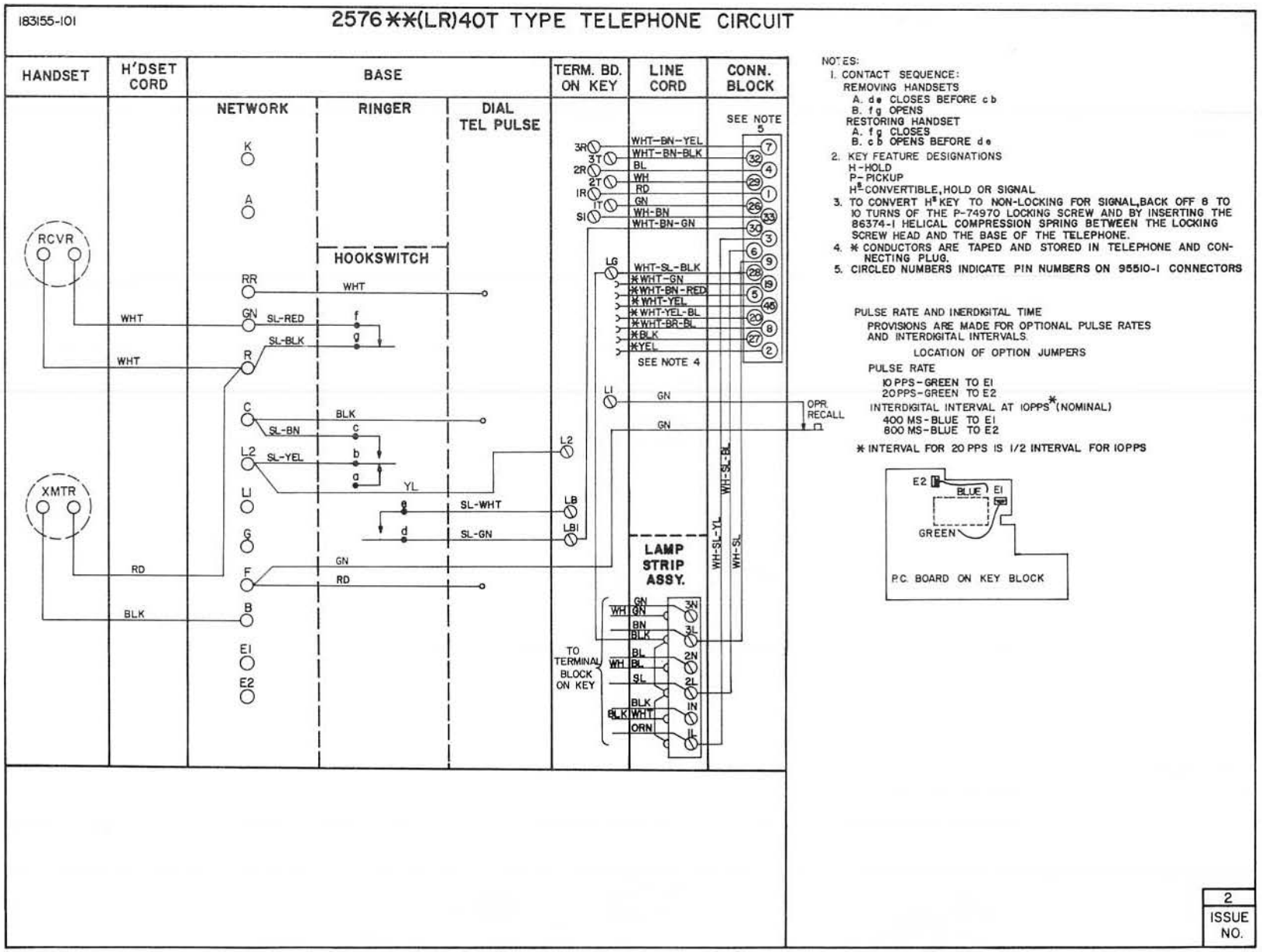

Figure 3: Circuit Label, Model 2576 Type 40T

TCI Library: www.telephonecollectors.info

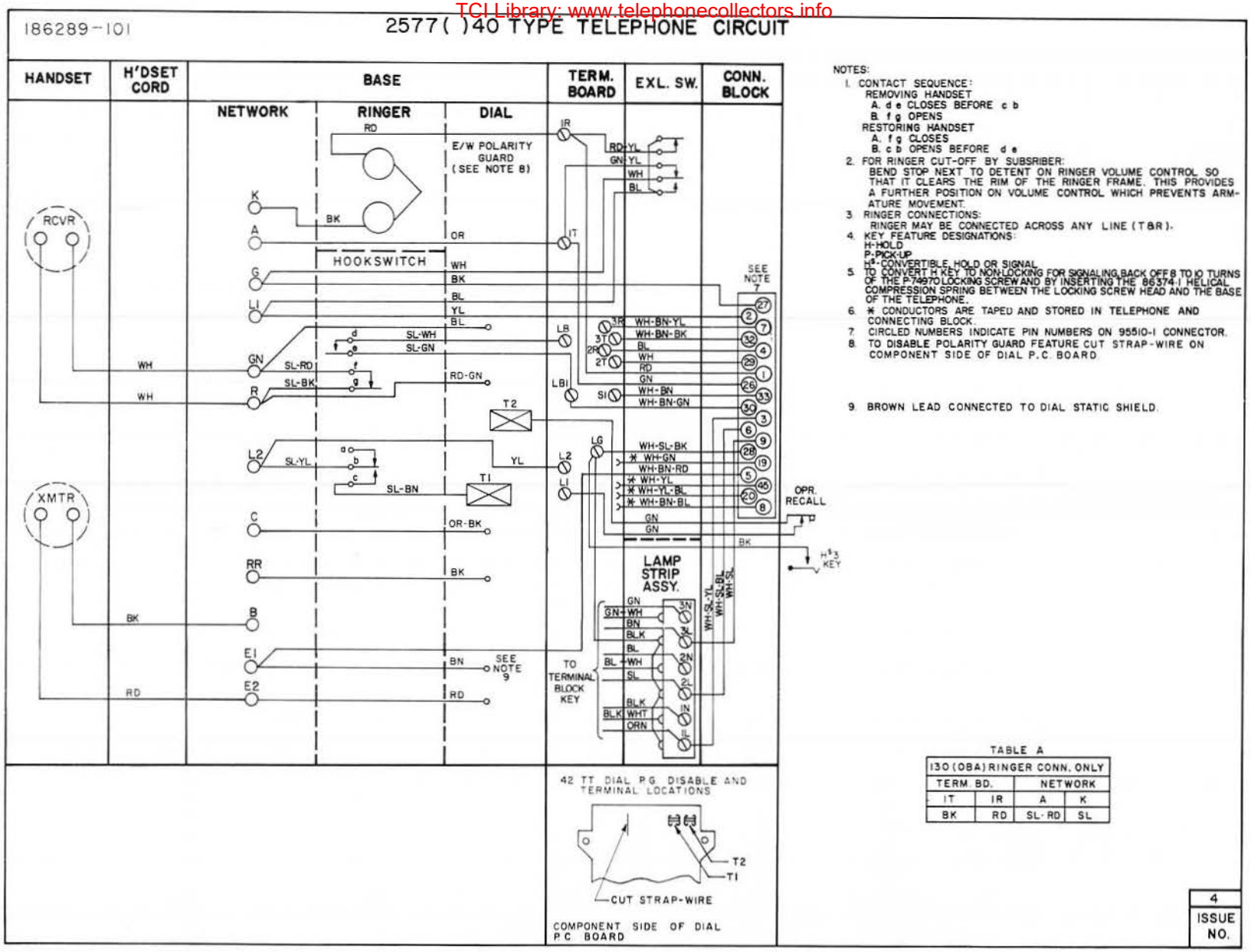

Figure 4: Circuit Label, Model 2577 Type 40

TCI Library: www.telephonecollectors.info

10-BUTTON, ROTARY DIAL, DESK TELEPHONES
GENERAL DESCRIPTION

CONTENTS PAGE

1. GENERAL DESCRIPTION 1
MODEL 830** ( ) 42 2
MODEL 830** ( ) 46 2
MODEL 830** ( ) 76 3
2. INSTALLATION 3
3. MAINTENANCE 3
4. SPEAKERPHONE 3
5. BUTTON CONVERSIONS 3
6. BUZZER INSTALLATION 3
7. DESIGNATION TABS 5
8. GROUNDING PUSHBUTTON 5
9. DISABLING HOOKSWITCH RESTORATION 5
10. CONNECTING 174B CALL ANNOUNCER 7
11. BUSY LAMP CONNECTIONS 7

AW 82-364

Figure 1: 10-Button, Rotary Dial, Desk Telephone

1. GENERAL DESCRIPTION

1.01 This document covers the 10-button, rotary dial, desk telephone. (See Figure 1.) A general description plus information peculiar to 10-button, rotary dial, desk telephones is included.

1.02 Whenever this section is reissued, reason for reissue will be listed in this paragraph.

1.03 For additional information, refer to Section 50-830-101, Replacement Parts, and to Section 50-830-102, Circuit Labels. For information on installation, maintenance, and components or equipment, consult related documents of the ITT Telephone Apparatus Practices Manual.

1.04 The Model 830 desk telephones are 10-button, rotary dial, antisidetone type units that operate efficiently over a wide range of loop resistances and line impedances. These telephones are designed for use with key telephone systems, such as the ITT 1A2 System, where several telephones have access to the same lines, CO trunks, or intercom lines. All models are equipped with a mounting cord terminated in an Amphenol-type connector.

1.05 The Model 830 desk telephones are identified by a code number stamped in ink on the bottom of the base plate. Refer to ordering information in Table A for an explanation of each code number.

1.06 Nine pushbutton keys on the telephone are used for line, trunk, or intercom lines. The red key on the far left is used as a hold key and allows any selected line or trunk to be placed in a hold condition. All remaining keys may be used as line keys or may be wired as either intercom lines or signal keys.

1.07 A signal lamp beneath each of the nine line keys indicates status of the associated line. (See Table B.)

TCI Library: www.telephonecollectors.info

TABLE A

ORDERING INFORMATION – TELEPHONES

CODE NUMBERS

TELEPHONE CODE NUMBERS ARE FORMED IN SIX STEPS AS FOLLOWS:

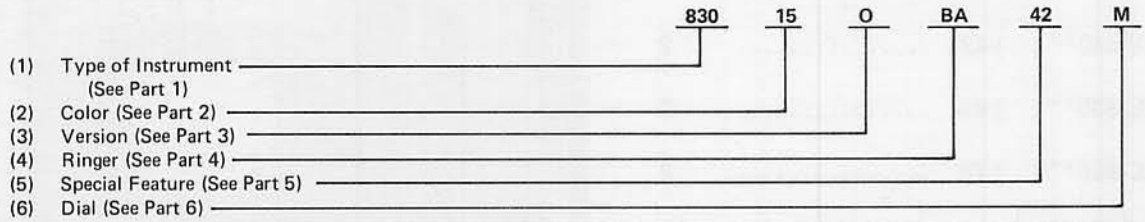

PART 1 TYPE OF INSTRUMENT

CODE	DESCRIPTION	COLOR OFFERED	VERSION OFFERED	RINGER OFFERED	FEATURE OFFERED	DIAL OFFERED
830	10-Button, Rotary Dial, Desk Telephone	00, 05, 13, 15, 44, and 45 (Available On All Models)	O	BA, LR	42, 46, 76	M

REFER TO INDIVIDUAL UNIT DESCRIPTION FOR COMPLETE DESCRIPTION OF FEATURE COMBINATIONS

PART 2 COLORS		PART 3 VERSIONS		PART 4 RINGERS		PART 5 SPECIAL FEATURES		PART 6 DIALS	
CODE	COLORS	CODE	VERSIONS	CODE	RINGERS	CODE	SPECIAL FEATURES	CODE	DIAL
00 05 13 15 44 45	Black Moss Green Beige White Light Ash Cocoa Brown	O	Conventional	LR BA	Less Ringer Straight Line	42 46 76	Standard Telephone Equipped To Operate W/External Speakerphone 42 Combined With Operator Recall Button 42 Combined With Automatic Exclusion And Release Button	M	Metropolitan (Letters & Numerals)

AW 82-332

1.08 All 10-button desk telephones are equipped with a hookswitch restoration feature that restores any operated line key when the hookswitch is operated.

1.09 Variations in the Model 830 series telephones are briefly described below. Circuit label drawings for these models are contained in Section 50-830-102.

MODEL 830** ( ) 42

1.10 The Model 830** ( ) 42 is a standard 10-button, rotary dial, desk type, key telephone equipped to operate with an external speakerphone. A set of contacts in the dial assembly disconnects the handsfree speaker during dialing; also, contacts in the hookswitch assembly provide on/off control of the handsfree equipment. The Model 830** ( ) 42 is equipped with a 50-conductor mounting cord fitted with a 50-pin (25-pair) male connector.

MODEL 830** ( ) 46

1.11 The Model 830** ( ) 46 is the same as the Model 830** ( ) 42 with the addition of an operator recall button. This button, containing normally closed contacts, can be used to recall the operator if the hookswitch restoration feature is used.

TCI Library: www.telephonecollectors.info

TABLE B

LINE KEY SIGNALS

CONDITION	LAMP INDICATION
Idle	Lamp Extinguished
Busy	Lamp Lit
Hold	Lamp Winking
Call Incoming	Lamp Flashing

AW 81-96

MODEL 830** ( ) 76

1.12 The Model 830** ( ) 76 is the same as the Model 830** ( ) 42 with the addition of an automatic exclusion (privacy) circuit with a release button. This release button contains normally open contacts. Where this feature is used, all telephones in the key system must contain the exclusion circuit and a release button.

2. INSTALLATION

2.01 Since these telephones are equipped with a connector-terminated mounting cord, installation consists of inserting the connector into the jack at the station connecting block and pressing to engage. For specific wiring information, refer to the appropriate circuit label in Section 50-830-102. Cable connections for 10-button telephones with feature codes 42 and 46 are listed in Table C. Cable connections for 10-button telephones with feature code 76 that differ from those listed in Table C are listed in Table D. For general installation information and installation of repair parts, refer to the applicable section of the ITT Telephone Apparatus Practices Manual.

3. MAINTENANCE

3.01 For general maintenance information, refer to the maintenance section of the ITT Telephone Apparatus Practices Manual. For a pictorial view and parts list, refer to Section 50-830-101.

4. SPEAKERPHONE

4.01 An external speakerphone may be installed on 10-button telephones. Most speakerphones provide the following additional features:

(a) Handsfree telephone operation. (Handsfree talking and dialing.)

(b) On-hook dialing.

(c) Automatic switching from speakerphone to handset operation.

(d) Transmitter muting for private conversation.

(e) Visual indication when system is in use.

(f) Cutoff of common ringer or other signaling devices when desired.

5. BUTTON CONVERSIONS

5.01 Any line key may be converted to signaling mode by removing the slotted head pin from the plunger shank. The slotted head pin is removed by turning clockwise. (On earlier models of the 10-button telephone the pin is removed by turning counterclockwise.)

6. BUZZER INSTALLATION

6.01 A buzzer may be installed as the signaling device of a telephone receiving an intercom call. The buzzer may be installed on the dial mounting bracket or mounted externally. For telephones with feature codes 42 and 46, the buzzer leads must be connected to the OR-YL and YL-OR leads inside the telephone. These leads are spare and can be found taped and stored inside the telephone. For telephones with feature code 76, a lamp ground lead is used instead of the OR-YL lead (provided the proper station cross-connections are made). Buzzers selected for this use must operate at 18 VAC, 60 Hz. (See Figure 2.)

6.02 A buzzer may also be used in place of the ringer. A 105 VAC buzzer must be provided. The ringer leads are removed and replaced by the buzzer leads.

TCI Library: www.telephonecollectors.info

TABLE C

CABLE CONNECTIONS FOR 10-BUTTON

TELEPHONES

(FEATUE CODES 42 AND 46)

LINES 1 THROUGH 5				LINES 6 THROUGH 9			
TELEPHONE TERMINAL	LEAD COLOR	LEAD DESIG.	CONNECTOR TERMINAL	TELEPHONE TERMINAL	LEAD COLOR	LEAD DESIG.	CONNECTOR TERMINAL
Line 1 (Blue Plug)	WH-BL	T	26	Line 6 (White Plug)	YL-BL	T	41
	BL-WH	R	1		BL-YL	R	16
	WH-OR	A	27		BN-BK	A or S	14
	WH-GN	LG	28		YL-GN	LG	43
	GN-WH	L	3		GN-YL	L	18
Line 2 (Orange Plug)	WH-BN	T	29	Line 7 (Red Plug)	YL-BN	T	44
	BN-WH	R	4		BN-YL	R	19
	WH-SL	A or S	30		BL-BK	A or S	11
	RD-BL	LG	31		VI-BL	LG	46
	BL-RD	L	6		BL-VI	L	21
Line 3 (Green Plug)	RD-OR	T	32	Line 8 (Black Plug)	VI-OR	T	47
	OR-RD	R	7		OR-VI	R	22
	RD-GN	A or S	33		GN-RD	A or S	8
	RD-BN	LG	34		VI-BN	LG, P3 or 1R	49
	BN-RD	L	9		BN-VI	L, P4 or 1T	24
Line 4 (Ivory Plug)	RD-SL	T	35	Line 9 (Yellow Plug)	VI-SL	T	50
	SL-RD	R	10		SL-VI	R	25
	BK-BL	A or S	36		SL-WH	A or S	5
	BK-OR	LG	37		VI-GN	LG or T1	48
	OR-BK	L	12		GN-VI	L or R1	23
Line 5 (Slate Plug)	BK-GN	T	38	10	OR-WH	A1	2
	GN-BK	R	13	G	YL-SL	B or B1	45
	BK-BN	A or S	39	A	SL-YL	R or R1	20
	BK-SL	LG	40	15	YL-OR	BL, AG or Spare	42
	SL-BK	L	15	6	OR-YL	SG, LK or Spare	17

NOTES:

1. All lamp ground leads are common.
2. Lead designations P3, P4, LK, T1, R1, AG and A1 are for speakerphone connections.
3. The YL-OR and OR-YL leads are spare leads and are taped and stored inside the telephone.
4. The designation S indicates that the lead provides an individual signal ground.

AW 82-113

TCI Library: www.telephonecollectors.info

TABLE D

SPECIAL CABLE CONNECTIONS FOR

10-BUTTON TELEPHONES (FEATURE CODE 76)

TELEPHONE TERMINAL	LEAD COLOR	LEAD DESIG.	CONNECTOR TERMINAL
Line 6 (White Plug)	WH-RD	A or S	14
Line 7 (Red Plug)	RD-WH	A or S	11
Line 8 (Black Plug)	BL-SL	A or S	8
Line 9 (Yellow Plug)	SL-BL	A or S	5
17	OR-YL	-24 VDC	17

NOTE:

1. This table lists those connections that differ from the connections for feature codes 42 and 46 telephones shown in Table C.

AW 82-491

7. DESIGNATION TABS

7.01 Designation tabs are included with each telephone. These tabs are installed by removing the cap from each key, placing the tab in the cap, and reinstalling the cap. The caps are removed by squeezing the sides and lifting. Note that locking surfaces are located on each of the caps and keys. These locking surfaces must properly align when reinstalling.

8. GROUNDING PUSHBUTTON

8.01 Modifications are made to line 9 of the telephone if a grounding pushbutton is required. A grounding pushbutton is required in some PABX applications for transferring calls, originating calls during a power failure, or other special functions. To convert line 9 to a grounding pushbutton, the following modifications should be made:

(a) Modify button to non-locking operation by removing interlock pin from line 9 plunger.

(b) Ground is provided on the WH-SL (A1) lead by the key system. (No cross-connect is necessary for this lead.)

(c) Cross-connect from the SL-WH lead to the PABX connection for the desired function.

9. DISABLING HOOKSWITCH RESTORATION

9.01 The hookswitch restoration feature used in multibutton telephones allows a station user to preselect a line key and then remove the handset to initiate a call. When the handset is returned to the cradle or the hookswitch is operated (hookswitch flash), the line key will be restored. To disable the hookswitch restoration feature, the following steps are taken:

(a) Remove telephone faceplate.

(b) Remove plastic trip arm by pulling up at the point directly above its mounting shaft.

(c) Remove torsion spring by sliding it off the mounting shaft.

(d) Reinstall telephone faceplate.

9.02 To enable the hookswitch restoration feature, the following steps are taken: (See Figure 3.)

(a) Remove telephone faceplate.

(b) Install torsion spring by sliding it onto the mounting shaft and hooking one end between the mounting shaft and the hookswitch operating arm.

(c) Install plastic trip arm by placing the notch in the trip arm on the end of the torsion spring (opposite the end hooked behind the operating arm) and pressing the trip arm onto the mounting shaft.

(d) When the hookswitch is operated, the plastic trip arm should engage with the latch arm.

(e) Reinstall telephone faceplate.

TCI Library: www.telephonecollectors.info

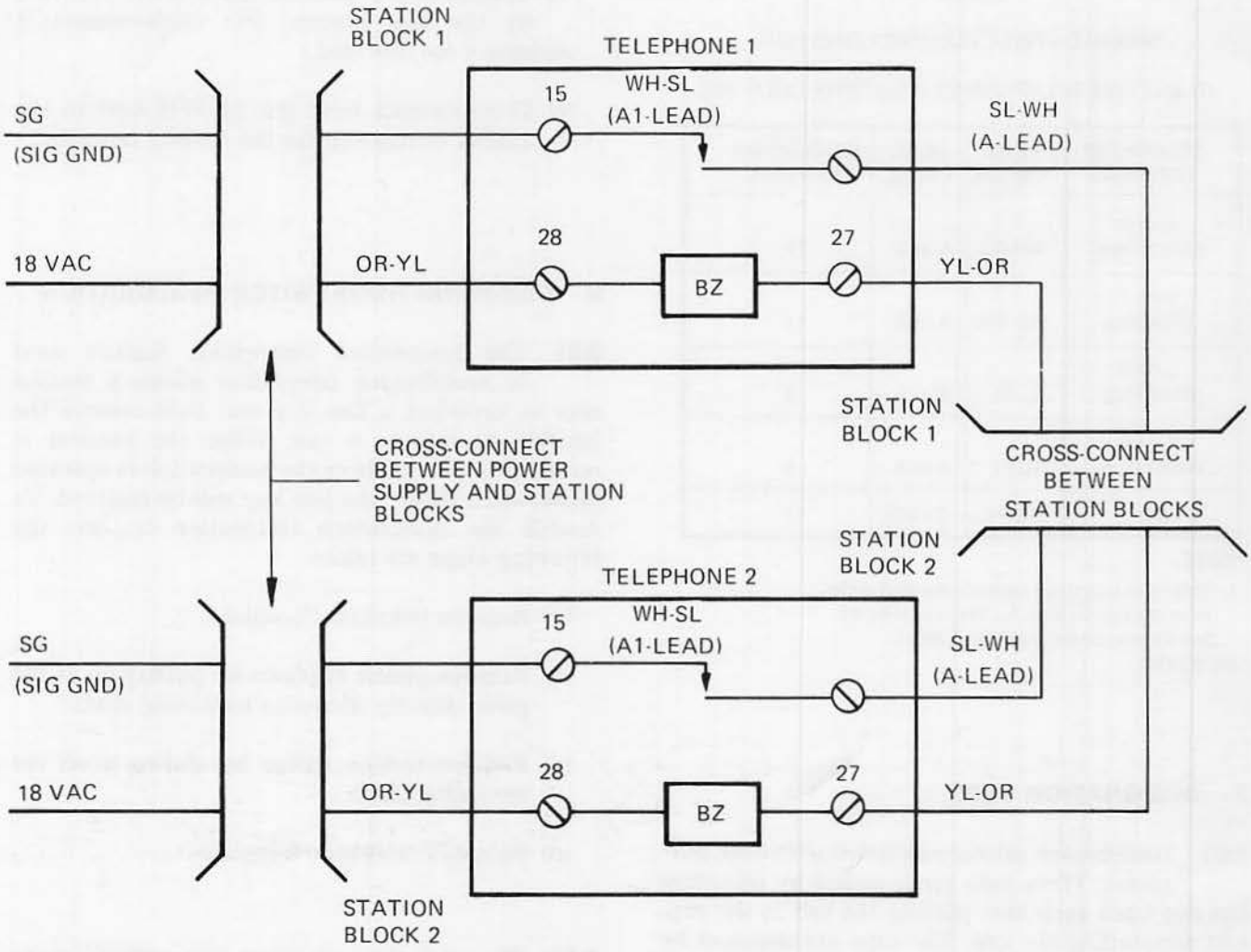

NOTES:

1. THE ARRANGEMENT SHOWN IS USING LINE 9 OF A TELEPHONE WITH FEATURE CODES 42 AND 46 AS AN EXAMPLE. IF ANOTHER LINE IS USED, SUBSTITUTE THE APPROPRIATE A1 AND A-LEADS FOR THAT LINE.
2. IN THE 10-BUTTON TELEPHONE, GROUND IS CONNECTED TO TERMINAL 15 (WH-SL). NO CROSS-CONNECT IS NECESSARY FOR THIS LEAD.
3. FOR TELEPHONES WITH FEATURE CODE 76, A LAMP GROUND LEAD IS USED INSTEAD OF THE OR-YL LEAD (PROVIDED THE PROPER STATION CROSS-CONNECTIONS ARE MADE).

AW 82-492

Figure 2: Circuit Diagram for Signal Buzzer

TCI Library: www.telephonecollectors.info

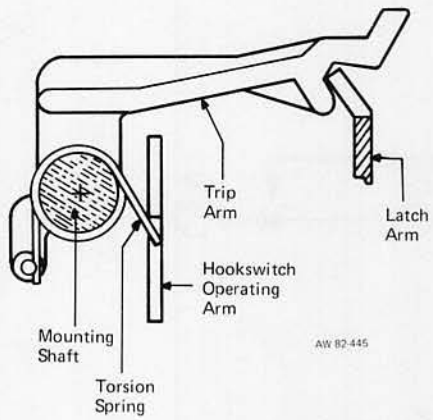

Figure 3: Installation of Trip Arm and Torsion Spring

9.03 Whenever the hookswitch restoration feature is disabled, it may become necessary to shorten or lengthen the spring connected to the operating arm to insure proper hookswitch operation. Proper operation requires the cradle to be fully depressed by the weight of the handset and return to the full up position when the handset is off-hook.

9.04 Earlier models of multibutton telephones may not provide the preselect function with the hookswitch restoration feature. These models include an adjustment screw on the latch arm rather than the plastic trip arm or torsion spring. To disable hookswitch restoration in these telephones, the following steps are taken:

(a) Remove telephone faceplate and housing.

(b) Turn the screw in the latch arm approximately five turns counterclockwise.

(c) Reinstall telephone faceplate and housing.

10. CONNECTING 174B CALL ANNOUNCER

10.01 A 174B call announcer is used to provide tone and voice signaling to, and handsfree answerback from, an intercom station. The 174B call announcer connects to 10-button telephones as follows:

(a) Connect BK (-24 VDC) lead of call announcer together with VI-BL lead of telephone to terminal 17 of terminal board.

(b) Connect YL (GND) lead of call announcer together with YL-OR lead of telephone to terminal 27 of terminal board.

(c) Connect RD (CA RST) lead of call announcer together with VI-BN lead of telephone to terminal 21 of terminal board.

(d) Connect GN (CA RT) lead of call announcer together with VI-GN lead of telephone to terminal 13 of terminal board. (The VI-GN lead must be moved from RR on network.)

11. BUSY LAMP CONNECTIONS

11.01 Busy lamp connections may vary depending on the type of key system being used. Modifications for the 10-button desk telephones with feature codes 42 and 46 should be as follows: (Refer to Figure 4.)

(a) Remove GN-WH lead from terminal 22 and connect to terminal 16 on the telephone terminal board.

(b) Connect one 1N4004 diode between terminals 22 and 16 on the terminal board, and connect another 1N4004 diode between terminals 22 and 28 on the terminal board as shown in Figure 4.

(c) Connect OR-YL mounting cord lead to terminal 28 of terminal board.

11.02 Modifications for the 10-button desk telephones with feature code 76 should be as follows: (Refer to Figure 5.)

(a) Connect one 1N4004 diode from terminal 22 to terminal 28 on telephone terminal board as shown in Figure 5.

(b) Connect any "LG" lamp ground lead to terminal 28 on the telephone terminal board. (Proper station cross-connections must be made to allow the use of an LG lead.)

TCI Library: www.telephonecollectors.info

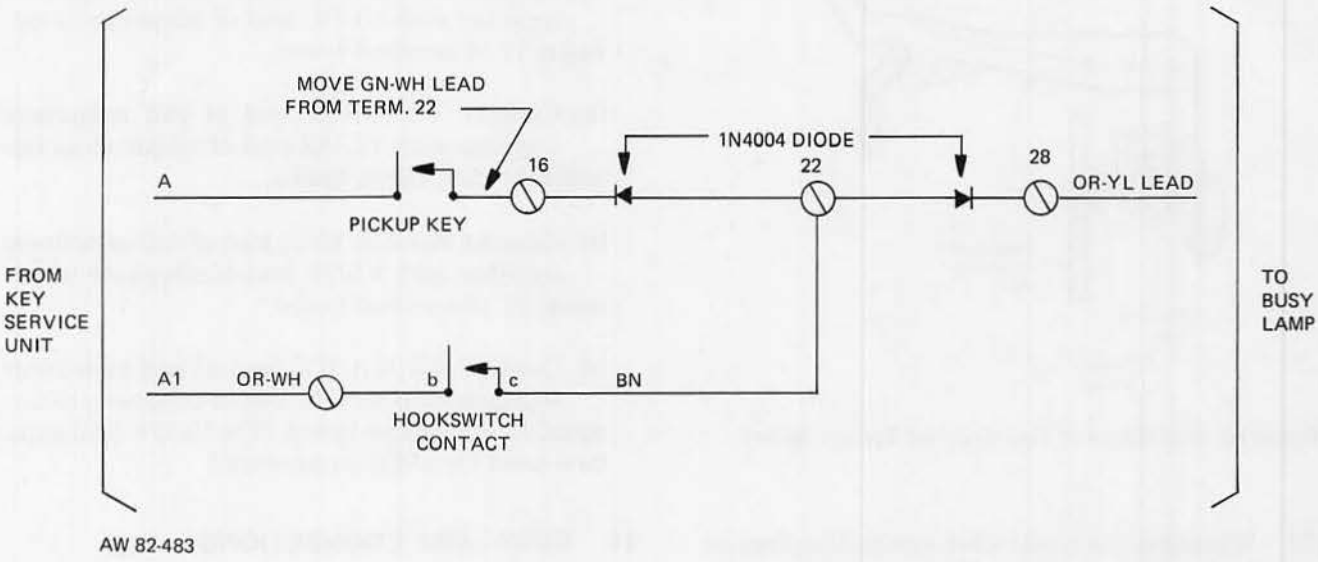

Figure 4: Busy Lamp Connections For 10-Button Telephones with Feature Codes 42 and 46

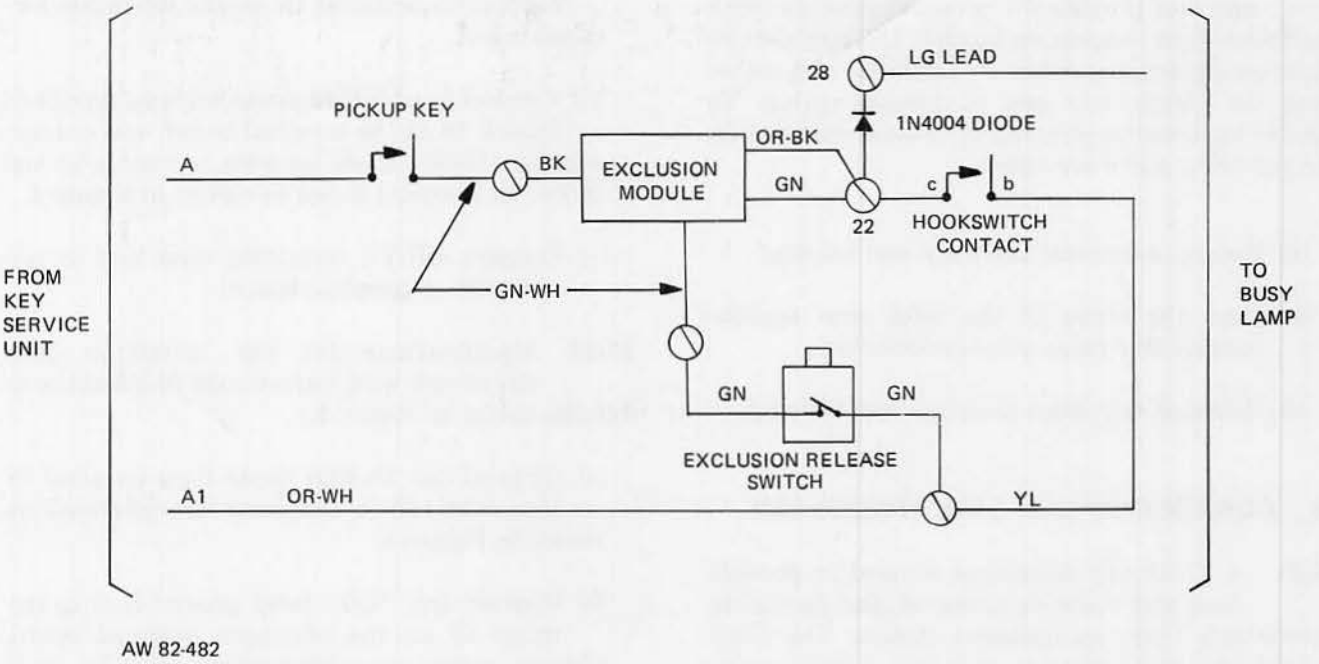

Figure 5: Busy Lamp Connections For 10-Button Telephones with Feature Code 76

TCI Library: www.telephonecollectors.info

10-BUTTON, ROTARY DIAL, DESK TELEPHONES

REPLACEMENT PARTS

1. GENERAL

1.01 This document covers the 10-button, rotary dial, desk telephone. (See Figure 1.) An exploded-view drawing of the telephone with major assembly groups (see Figure 2) and a replacement parts list (see Table A) are included.

1.02 This section is reissued to reflect changes in the 10-button, rotary dial, desk telephone and to incorporate the changes listed in the Telephone Apparatus Practices Change Notice, Section 11-510-100. Whenever this section is reissued, reason for reissue will be listed in this paragraph.

1.03 For additional information on description and installation of the telephones, refer to Section 50-830-100. The circuit labels appear in Section 50-830-102. Related documents of the ITT Telephone Apparatus Practices Manual provide information on components.

1.04 The Model 830 desk telephones are 10-button, rotary dial, anti-sidetone type units that operate efficiently over a wide range of loop resistances and line impedances. These telephones are designed for use with key telephone systems, such as the ITT 1A2 System, where several telephones have access to the same lines, CO trunks, or intercom lines.

1.05 The Model 830 desk telephones are identified by a code number stamped in ink on the bottom of the base plate. Refer to Section 50-830-100 of the ITT Telephone Apparatus Practices Manual for ordering information and for an explanation of each code number.

AW 82-364

Figure 1: 10-Button, Rotary Dial, Desk Telephone

TCI Library: www.telephonecollectors.info

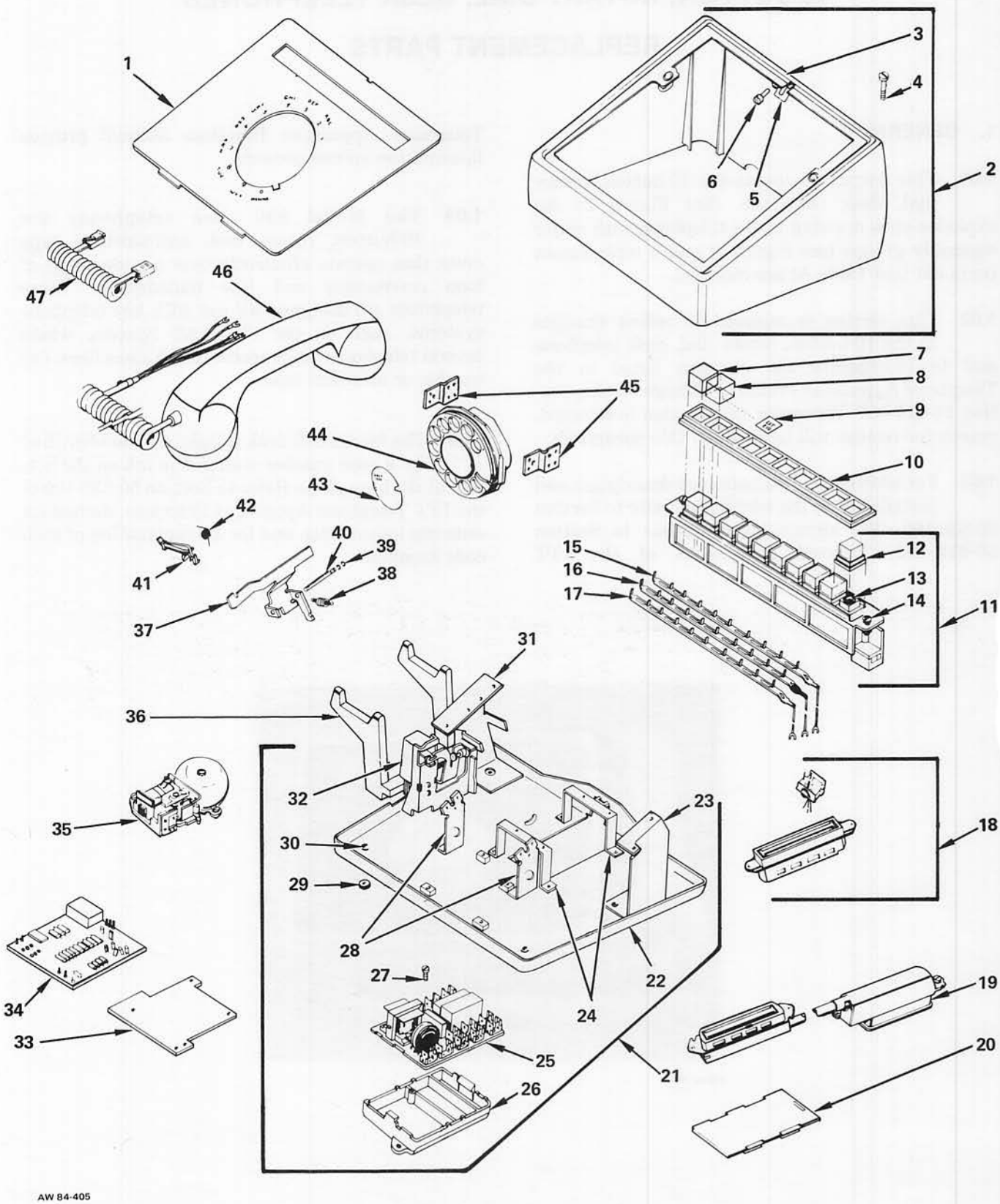

Figure 2: 10-Button, Rotary Dial, Desk Telephone, Exploded View

TCI Library: www.telephonecollectors.info

TABLE A

REPLACEMENT PARTS LIST

INDEX NO	PART NUMBER	DESCRIPTION	QUANTITY USED		
		10-Button, Rotary Dial, Desk Telephone	**830/42**	**830/46**	**830/76**
1	181144-***	Faceplate	1	–	–
1	181689-***	Faceplate	–	1	1
2	181102-0**	Housing Assembly	1	1	1
2	187906-0**	Housing Assembly, Full-Modular	1	1	1
3	181104-0**	Housing	1	1	1
3	187922-0**	Housing, Full-Modular	1	1	1
4	095992-102	Screw, Housing	2	2	2
5	181100-101	Spring, Latch	1	1	1
6	181289-101	Screw, Latch Spring	1	1	1
7	181131-102	Cap, Red	1	1	1
8	181131-101	Cap, Clear	9	9	9
9	181281-101	Tab, Key Designation (Strip Of 12)	1	1	1
10	181287-101	Collar, Key Strip	1	1	1
11	181137-104	Key Assembly	1	1	–
11	182552-102	Key Assembly	–	–	1
12	181122-101	Button	10	10	10
13	000051-00A	Lamp	9	9	9
14	095992-102	Screw	2	2	2
15	181292-101	Strip, Contact (GN Wire)	1	1	1
16	181292-102	Strip, Contact (RD Wire)	1	1	1
17	181292-105	Strip, Contact (SL Wire)	1	1	1
18	181154-101	Cord, Internal	1	1	–
18	182546-101	Cord, Internal	–	–	1
19	184371-102	Cord, Mounting (50-Conductor)	1	1	1
20	181290-101	Slide	1	1	1
21	181250-103	Base Assembly	1	1	1
22	181141-101	Plate, Base	1	1	1
23	181251-101	Bracket, Key Right	1	1	1
24	181255-101	Bracket, Plug	2	2	2
25	181427-101	PC Network (#183070-101)[1]	1	1	1
26	182175-101	Spacer, Network	1	1	1
27	096407-103	Screw, Network Mounting	1	1	1
28	181254-102	Bracket, Dial	2	2	2
29	182337-101	Foot	4	4	4
30	082486-102	Rivet, Foot	4	4	4
31	181150-102	Left Bracket Assembly	1	1	1
	185619-101	Left Trip Bracket Assembly	1	1	1
	181252-101	Bracket, Key Left	1	1	1
	185618-101	Bracket, Trip	1	1	1

TCI Library: www.telephonecollectors.info

TABLE A

REPLACEMENT PARTS LIST (Cont)

INDEX NO	PART NUMBER	DESCRIPTION	QUANTITY USED		
		10-Button, Rotary Dial, Desk Telephone	**830/42**	**830/46**	**830/76**
32	181260-101	Cradle Switch Assembly[1]	1	1	1
33	181298-101	Terminal Board	1	1	1
34	182386-101	PC Board (Exclusion)	–	–	1
35	000148-DBA	Ringer[1]	1	1	1
36	183105-102	Switch Hook Assembly	1	1	1
	182900-101	Cradle, Switch Hook	1	1	1
	181145-101	Screw, Switch Hook Cradle	3	3	3
	185494-101	Operating Arm Assembly	1	1	1
	185487-101	Arm, Operating	1	1	1
	075307-104	Spring, Cradle Return	1	1	1
	181282-101	Shaft, Pivot	1	1	1
	073538-110	Ring, Retainer	1	1	1
37	185488-101	Arm, Latch	1	1	1
38	181151-101	Spring, Latch Arm	1	1	1
39	073538-110	Ring, Retainer	2	2	2
40	181152-101	Pin, Pivot	1	1	1
41	185486-101	Arm, Trip	1	1	1
42	185485-101	Spring, Torsion	1	1	1
43	075415-101	Card, Number	1	1	1
44	003800-00H	Dial Assembly, Metropolitan (Letters And Numerals)[1]	1	1	1
45	181146-101	Bracket, Dial Adapter	2	2	2
46	0065**-0C2	Handset Assembly, Nonmodular[1]	1	1	1
46	0065**-0M2	Handset Assembly, Modular[1]	1	1	1
47	9018**-072	Cord, Handset, Modular	1	1	1
	600152-611 -001	Jack Assembly, Handset Cord, Modular (Not Shown)	1	1	1
	182990-105	Insulator Assembly, Modular (Not Shown)	1	1	1
	181973-101	Pushbutton, Operator Recall (Not Shown)	–	1	–

TCI Library: www.telephonecollectors.info

TABLE A

REPLACEMENT PARTS LIST (Cont)

INDEX NO	PART NUMBER	DESCRIPTION	QUANTITY USED		
		10-Button, Rotary Dial, Desk Telephone	**830/42**	**830/46**	**830/76**
	181971-101	Pushbutton, Exclusion Release (Not Shown)	–	–	1
	187944-101	Nameplate, ITT (Not Shown)	1	1	1

NOTES:

1 Refer to Component Parts Section of this manual for Assembly Parts List.
** Substitute 2-digit color code when ordering.
*** Substitute 3-digit color code when ordering faceplate.

CODE	COLOR	CODE	COLOR	CODE	COLOR	CODE	COLOR
101	Charcoal	104	Light Gray	107	Cocoa Brown	110	Clear
102	Light Green	105	Burnt Orange	108	Harvest Gold	111	Woodgrain
103	Muted Beige	106	Light Ash	109	Cherry Red		

AW 84-764

TCI Library: www.telephonecollectors.info

10-BUTTON, ROTARY DIAL, DESK TELEPHONES

CIRCUIT LABELS

1. GENERAL

1.01 This document covers the 10-button, rotary dial, desk telephones. (See Figure 1.) Circuit labels for 10-button, rotary dial, desk telephones are included. (See Table A.)

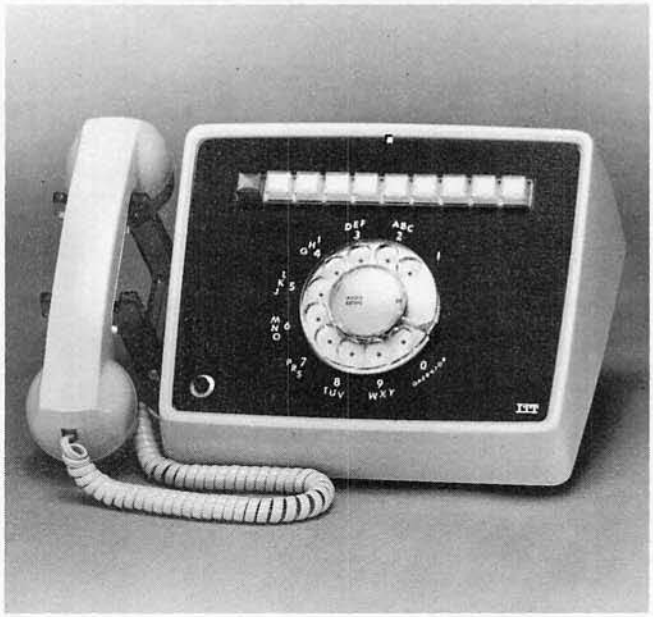

AW 86-376

Figure 1: 10-Button, Rotary Dial, Desk Telephone

1.02 This section is reissued to provide the latest issue of circuit labels for the following 10-button, rotary dial, desk telephones:

(a) Model 830, Types 42 and 46

(b) Model 830, Type 76

1.03 For additional information on description and installation of the telephones, refer to Section 50-830-100. A replacement parts list and an exploded-view drawing for the telephones are contained in Section 50-830-101. Related documents of the ITT Telephone Apparatus Practices Manual provide information on components.

1.04 The Model 830 desk telephones are identified by a code number stamped in ink on the bottom of the base plate. Refer to Section 50-830-100 of the ITT Telephone Apparatus Practices Manual for ordering information and for an explanation of each code number.

1.05 The Model 830 desk telephones are 10-button, rotary dial, anti-sidetone type units that operate efficiently over a wide range of loop resistances and line impedances. These telephones are designed for use with key telephone systems, such as the ITT 1A2 System, where several telephones have access to the same lines, CO trunks, or intercom lines.

TABLE A

LIST OF CIRCUIT LABELS

MODEL NO	TYPE NO	FIGURE NO
830	42, 46	2
830	76	3

AW 86-364

TCI Library: www.telephonecollectors.info

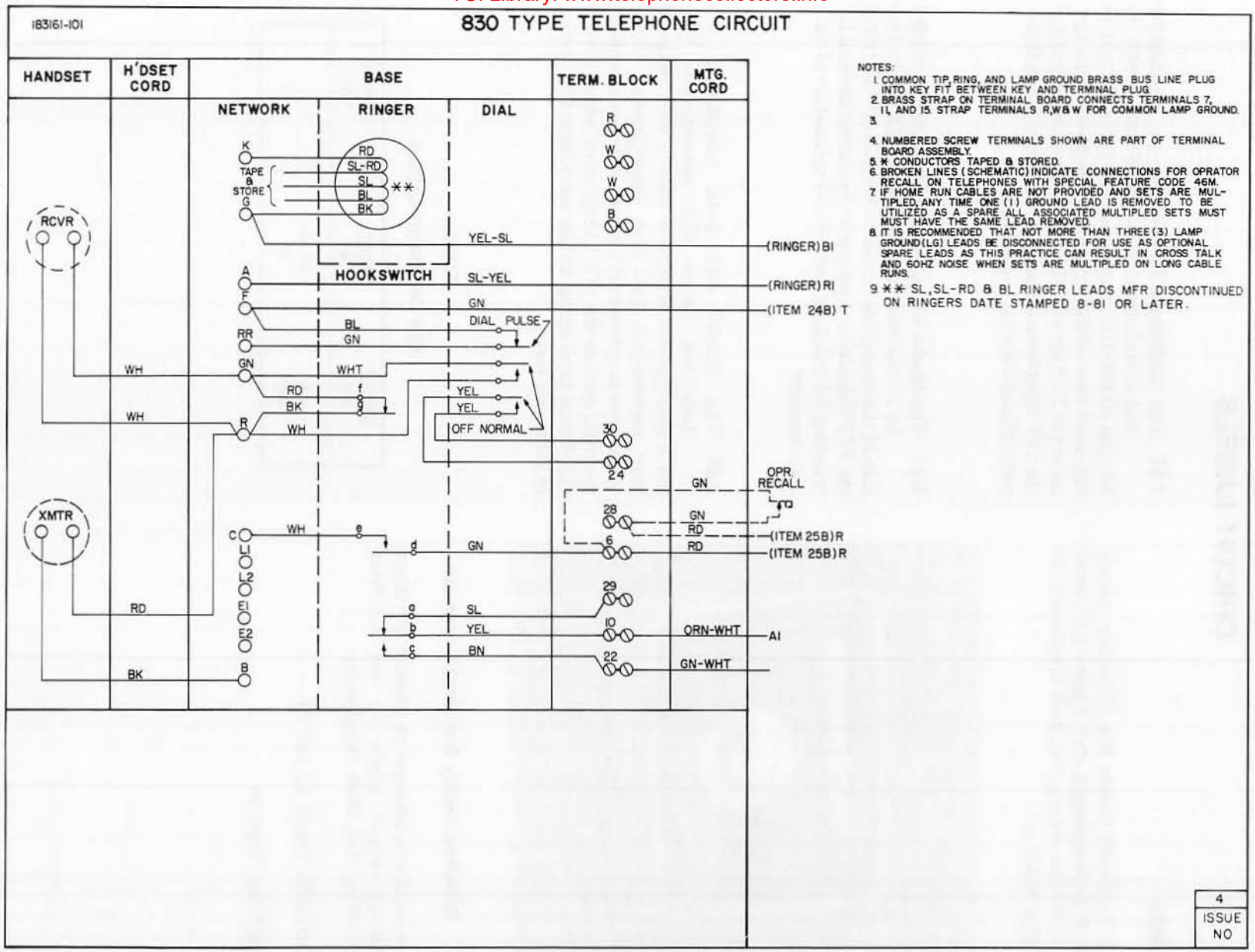

Figure 2: Circuit Label, Model 830 Types 42, 46 (Sheet 1 of 2)

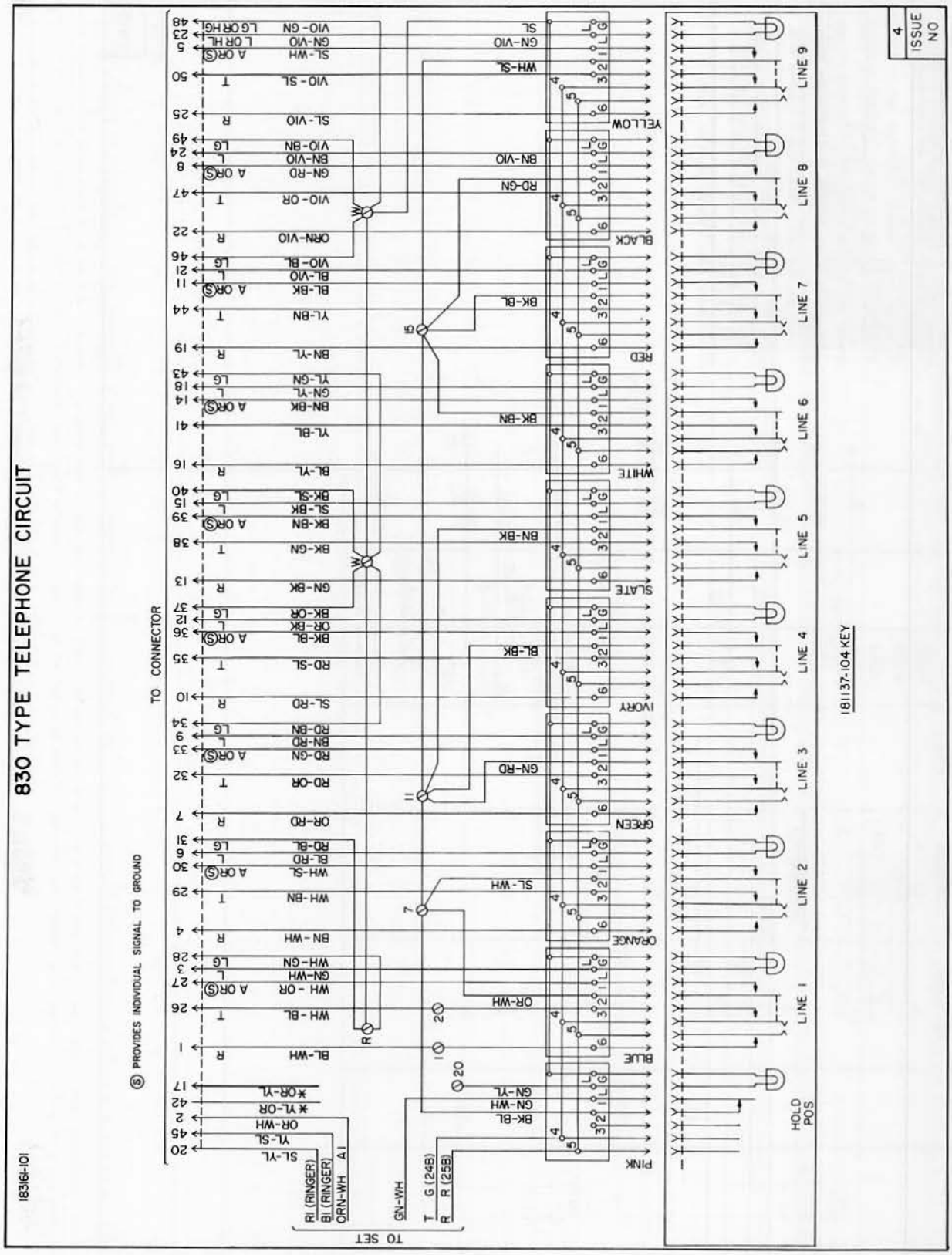

Figure 2: Circuit Label, Model 830 Types 42, 46 (Sheet 2 of 2)

TCI Library: www.telephonecollectors.info

TCI Library: www.telephonecollectors.info

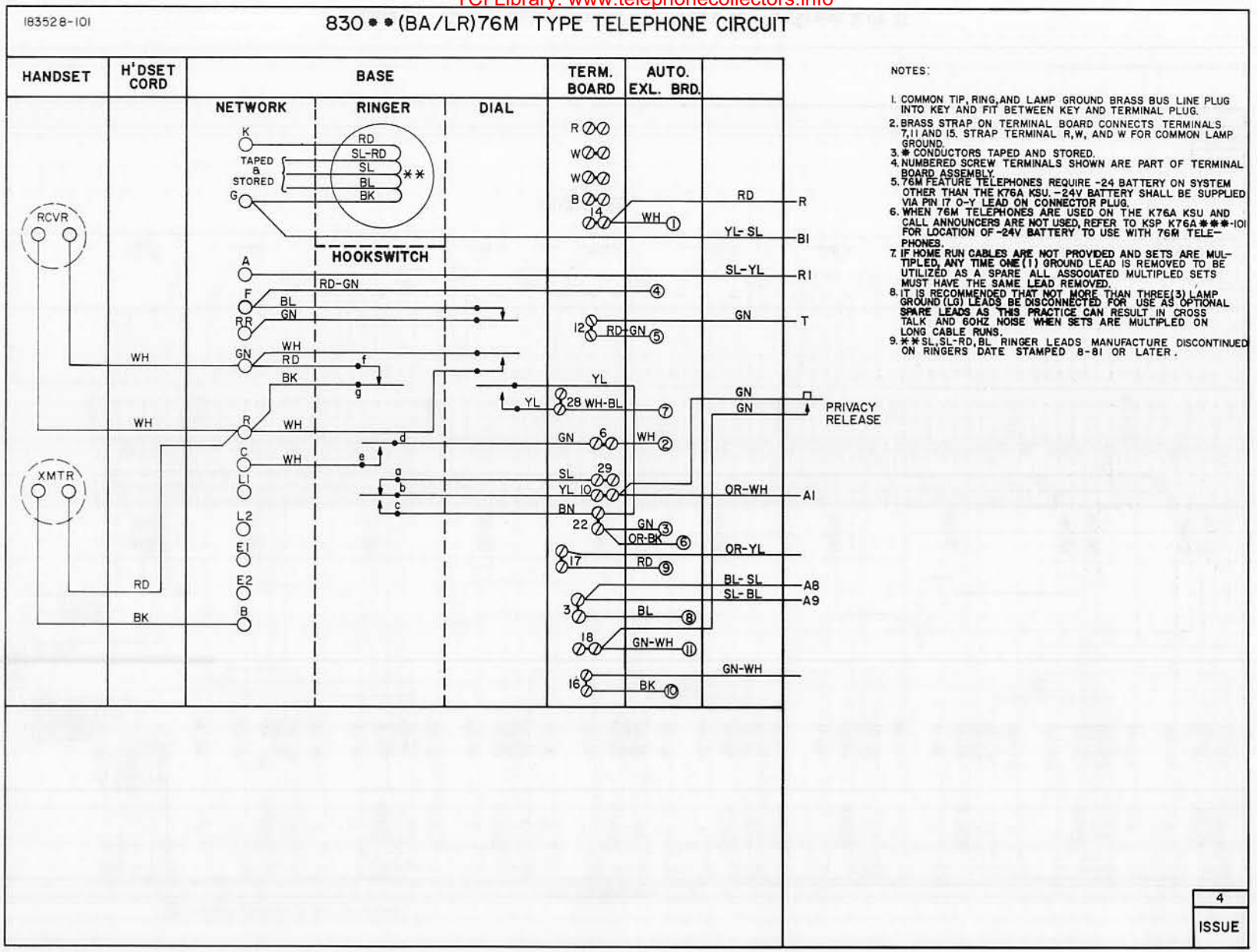

Figure 3: Circuit Label, Model 830 Type 76 (Sheet 1 of 2)

TCI Library: www.telephonecollectors.info

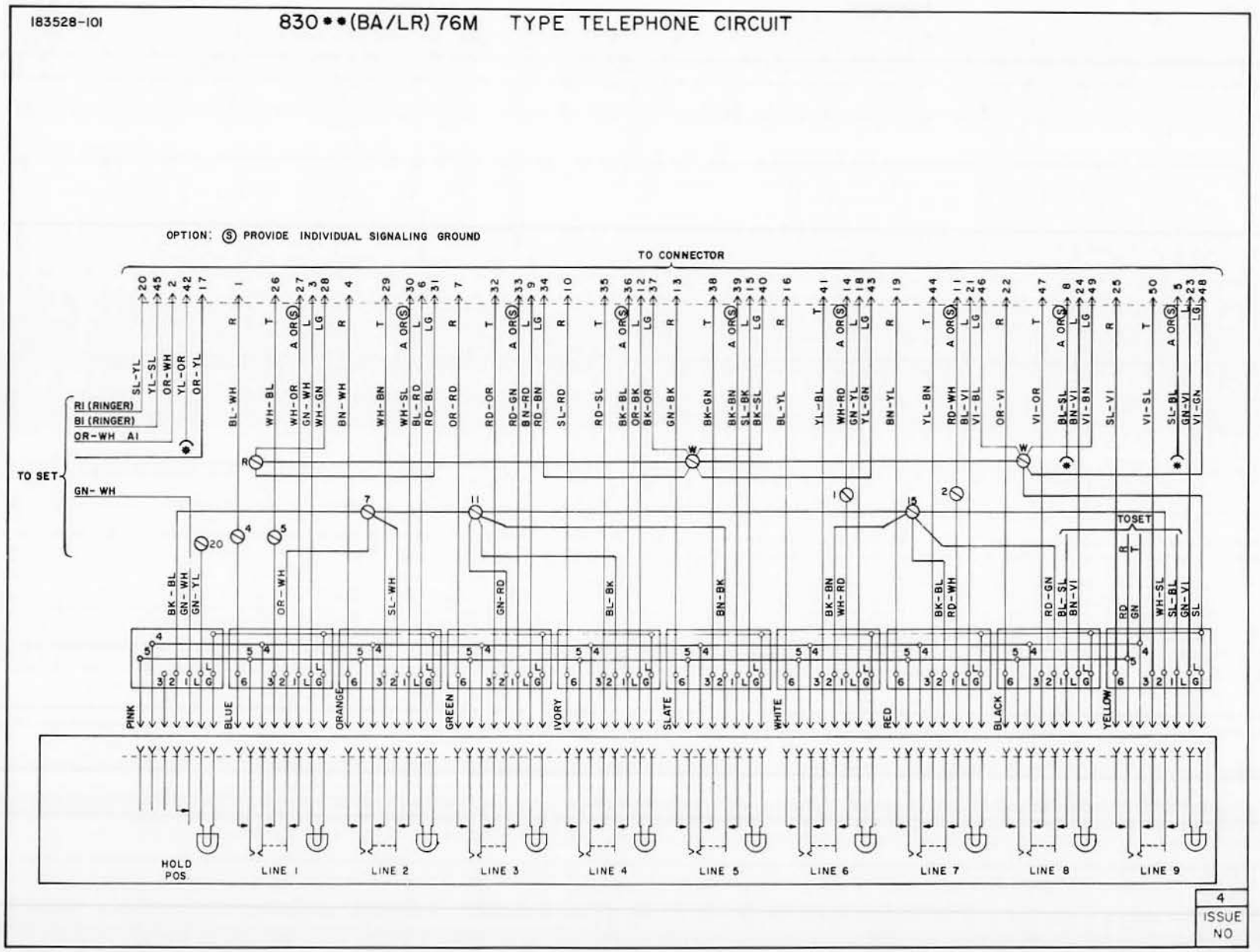

Figure 3: Circuit Label, Model 830 Type 76 (Sheet 2 of 2)

TCI Library: www.telephonecollectors.info

10-BUTTON, PUSHBUTTON DIAL, DESK TELEPHONES
GENERAL DESCRIPTION

CONTENTS PAGE

1. GENERAL DESCRIPTION 1
MODEL 2830** ( ) 40 2
MODEL 2830** ( ) 42 2
MODEL 2830** ( ) 46 3
MODEL 2830** ( ) 76 3
2. INSTALLATION 3
3. MAINTENANCE 3
4. SPEAKERPHONE 3
5. BUTTON CONVERSIONS 3
6. BUZZER INSTALLATION 3
7. DESIGNATION TABS 5
8. GROUNDING PUSHBUTTON 5
9. DISABLING HOOKSWITCH RESTORATION 5
10. CONNECTING 174B CALL ANNOUNCER 7
11. BUSY LAMP CONNECTIONS 7

AW 82-365

Figure 1: 10-Button, Pushbutton Dial, Desk Telephone

1. GENERAL DESCRIPTION

1.01 This document covers the 10-button, pushbutton dial, desk telephone. (See Figure 1.) A general description plus information peculiar to 10-button, pushbutton dial, desk telephones is included.

1.02 Whenever this section is reissued, reason for reissue will be listed in this paragraph.

1.03 For additional information, refer to Section 50-830-104, Replacement Parts, and to Section 50-830-105, Circuit Labels. For information on installation, maintenance, and components or equipment, consult related documents of the ITT Telephone Apparatus Practices Manual.

1.04 The Model 2830 desk telephones are 10-button, pushbutton dial, antisidetone type units that operate efficiently over a wide range of loop resistances and line impedances. These telephones are designed for use with key telephone systems, such as the ITT 1A2 System, where several telephones have access to the same lines, CO trunks, or intercom lines. All models are equipped with a mounting cord terminated in an Amphenol-type connector.

1.05 The Model 2830 desk telephones are identified by a code number stamped in ink on the bottom of the base plate. Refer to ordering information in Table A for an explanation of each code number.

1.06 Nine pushbutton keys on the telephone are used for line, trunk, or intercom lines. The red key on the far left is used as a hold key and allows any selected line or trunk to be placed in a hold condition. All remaining keys may be used as line keys or may be wired as either intercom lines or signal keys.

TCI Library: www.telephonecollectors.info

TABLE A

ORDERING INFORMATION – TELEPHONES

CODE NUMBERS

TELEPHONE CODE NUMBERS ARE FORMED IN SIX STEPS AS FOLLOWS:

2830 15 O BA 40 M

(1) Type of Instrument (See Part 1)
(2) Color (See Part 2)
(3) Version (See Part 3)
(4) Ringer (See Part 4)
(5) Special Feature (See Part 5)
(6) Dial (See Part 6)

PART 1 TYPE OF INSTRUMENT

CODE	DESCRIPTION	COLOR OFFERED	VERSION OFFERED	RINGER OFFERED	FEATURE OFFERED	DIAL OFFERED
2830	10-Button, Pushbutton Dial, Desk Telephone	00, 05, 13, 15, 44, And 45	O	BA, LR	42, 46, 76,	M, R
2830	10-Button, Pushbutton Dial, Desk Telephone	(Available On All Models)	O	BA, LR	40	T

REFER TO INDIVIDUAL UNIT DESCRIPTION FOR COMPLETE DESCRIPTION OF FEATURE COMBINATIONS

PART 2 COLORS		PART 3 VERSIONS		PART 4 RINGERS		PART 5 SPECIAL FEATURES		PART 6 DIALS	
CODE	COLORS	CODE	VERSIONS	CODE	RINGERS	CODE	SPECIAL FEATURES	CODE	DIAL
00	Black	O	Conventional	LR	Less Ringer	40	No Special Features	M	Metropolitan (Letters & Numerals)
05	Moss Green								
13	Beige			BA	Straight Line	42	40 Equipped To Operate w/ An External Speakerphone	R	Regular (Numerals Only)
15	White								
44	Light Ash					46	42 Combined With Operator Recall Button	T	Tel-Pulse (Metro Only)
45	Cocoa Brown								
						76	42 Combined With Automatic Exclusion, And Release Button		

AW 82-340

1.08 All 10-button desk telephones are equipped with a hookswitch restoration feature that restores any operated line key when the hookswitch is operated.

1.09 Variations in the Model 2830 series telephones are briefly described below. Circuit label drawings for these models are contained in Section 50-830-105.

MODEL 2830 ( ) 40**

1.10 The Model 2830** ( ) 40 is a standard 10-button, pushbutton dial, desk type key telephone that can be modified to accept various features. It is equipped with a 50-conductor mounting cord fitted with a 50-pin (25-pair) male connector.

MODEL 2830 ( ) 42**

1.11 The Model 2830** ( ) 42 is a standard 10-button, pushbutton dial, desk type, key telephone equipped to operate with an external speakerphone. A set of contacts in the dial assembly disconnects the handsfree speaker during dialing; also, contacts in the hookswitch assembly provide on/off control of the handsfree equipment. The Model 2830** ( ) 42 is equipped with a 50-conductor mounting cord fitted with a 50-pin (25-pair) male connector.

TCI Library: www.telephonecollectors.info

TABLE B

LINE KEY SIGNALS

CONDITION	LAMP INDICATION
Idle	Lamp Extinguished
Busy	Lamp Lit
Hold	Lamp Winking
Call Incoming	Lamp Flashing

AW 81-96

MODEL 2830 ( ) 46**

1.12 The Model 2830** ( ) 46 is the same as the Model 2830** ( ) 42 with the addition of an operator recall button. This button, containing normally closed contacts, can be used to recall the operator if the hookswitch restoration feature is used.

MODEL 2830 ( ) 76**

1.13 The Model 2830** ( ) 76 is the same as the Model 2830** ( ) 42 with the addition of an automatic exclusion (privacy) circuit with a release button. This release button contains normally open contacts. Where this feature is used, all telephones in the key system must contain the exclusion circuit and a release button.

2. INSTALLATION

2.01 Since these telephones are equipped with a connector-terminated mounting cord, installation consists of inserting the connector into the jack at the station connecting block and pressing to engage. For specific wiring information, refer to the appropriate circuit label in Section 50-830-105. Cable connections for 10-button telephones with feature codes 42 and 46 are listed in Table C. Cable connections for 10-button telephones with feature code 76 that differ from those listed in Table C are listed in Table D. For general installation information and installation of repair parts, refer to the applicable section of the ITT Telephone Apparatus Practices Manual.

3. MAINTENANCE

3.01 For general maintenance information, refer to the maintenance section of the ITT Telephone Apparatus Practices Manual. For a pictorial view and parts list, refer to Section 50-830-104.

4. SPEAKERPHONE

4.01 An external speakerphone may be installed on 10-button telephones. Most speakerphones provide the following additional features:

(a) Handsfree telephone operation. (Handsfree talking and dialing.)

(b) On-hook dialing.

(c) Automatic switching from speakerphone to handset operation.

(d) Transmitter muting for private conversation.

(e) Visual indication when system is in use.

(f) Cutoff of common ringer or other signaling devices when desired.

5. BUTTON CONVERSIONS

5.01 Any line key may be converted to signaling mode by removing the slotted head pin from the plunger shank. The slotted head pin is removed by turning clockwise. (On earlier models of the 10-button telephone the pin is removed by turning counterclockwise.)

6. BUZZER INSTALLATION

6.01 A buzzer may be installed as the signaling device of a telephone receiving an intercom call. The buzzer may be either installed on the dial mounting bracket or mounted externally. For telephones with feature codes 42 and 46, buzzer leads must be connected to the OR-YL and YL-OR leads inside the telephone. The OR-YL and YL-OR leads are spare and can be found taped and stored inside the telephone. For telephones with feature code 76, a lamp ground lead is used instead of the OR-YL lead (provided the proper station cross-connections are made). Buzzers selected for this use must operate at 18 VAC, 60 Hz. (See Figure 2.)

TCI Library: www.telephonecollectors.info

TABLE C

CABLE CONNECTIONS FOR 10-BUTTON

TELEPHONES

(FEATURE CODES 42 AND 46)

LINES 1 THROUGH 5				LINES 6 THROUGH 9			
TELEPHONE TERMINAL	LEAD COLOR	LEAD DESIG.	CONNECTOR TERMINAL	TELEPHONE TERMINAL	LEAD COLOR	LEAD DESIG.	CONNECTOR TERMINAL
Line 1 (Blue Plug)	WH-BL	T	26	Line 6 (White Plug)	YL-BL	T	41
	BL-WH	R	1		BL-YL	R	16
	WH-OR	A	27		BN-BK	A or S	14
	WH-GN	LG	28		YL-GN	LG	43
	GN-WH	L	3		GN-YL	L	18
Line 2 (Orange Plug)	WH-BN	T	29	Line 7 (Red Plug)	YL-BN	T	44
	BN-WH	R	4		BN-YL	R	19
	WH-SL	A or S	30		BL-BK	A or S	11
	RD-BL	LG	31		VI-BL	LG	46
	BL-RD	L	6		BL-VI	L	21
Line 3 (Green Plug)	RD-OR	T	32	Line 8 (Black Plug)	VI-OR	T	47
	OR-RD	R	7		OR-VI	R	22
	RD-GN	A or S	33		GN-RD	A or S	8
	RD-BN	LG	34		VI-BN	LG, P3 or 1R	49
	BN-RD	L	9		BN-VI	L, P4 or 1T	24
Line 4 (Ivory Plug)	RD-SL	T	35	Line 9 (Yellow Plug)	VI-SL	T	50
	SL-RD	R	10		SL-VI	R	25
	BK-BL	A or S	36		SL-WH	A or S	5
	BK-OR	LG	37		VI-GN	LG or T1	48
	OR-BK	L	12		GN-VI	L or R1	23
Line 5 (Slate Plug)	BK-GN	T	38	10	OR-WH	A1	2
	GN-BK	R	13	G	YL-SL	B or B1	45
	BK-BN	A or S	39	A	SL-YL	R or R1	20
	BK-SL	LG	40	15	YL-OR	BL, AG or Spare	42
	SL-BK	L	15	6	OR-YL	SG, LK or Spare	17

NOTES:

1. All lamp ground leads are common.
2. Lead designations P3, P4, LK, T1, R1, AG and A1 are for speakerphone connections.
3. The YL-OR and OR-YL leads are spare leads and are taped and stored inside the telephone.
4. The designation S indicates that the lead provides an individual signal ground.

AW 82-113

TCI Library: www.telephonecollectors.info

TABLE D

SPECIAL CABLE CONNECTIONS FOR

10-BUTTON TELEPHONES (FEATURE CODE 76)

TELEPHONE TERMINAL	LEAD COLOR	LEAD DESIG.	CONNECTOR TERMINAL
Line 6 (White Plug)	WH-RD	A or S	14
Line 7 (Red Plug)	RD-WH	A or S	11
Line 8 (Black Plug)	BL-SL	A or S	8
Line 9 (Yellow Plug)	SL-BL	A or S	5
17	OR-YL	-24 VDC	17

NOTE:

1. This table lists those connections that differ from the connections for feature codes 42 and 46 telephones shown in Table C.

AW 82-491

6.02 A buzzer may also be used in place of the ringer. A 105 VAC buzzer must be provided. The ringer leads are removed and replaced by the buzzer leads.

7. DESIGNATION TABS

7.01 Designation tabs are included with each telephone. These tabs are installed by removing the cap from each key, placing the tab in the cap, and reinstalling the cap. The caps are removed by squeezing the sides and lifting. Note that locking surfaces are located on each of the caps and keys. These locking surfaces must properly align when reinstalling.

8. GROUNDING PUSHBUTTON

8.01 Modifications are made to line 9 of the telephone if a grounding pushbutton is required. A grounding pushbutton is required in some PABX applications for transferring calls, originating calls during a power failure, or other special functions. To convert line 9 to a grounding pushbutton, the following modifications should be made:

(a) Modify button to non-locking operation by removing interlock pin from the line 9 plunger.

(b) Ground is provided on the WH-SL (A1) lead by the key system. (No cross-connect is necessary for this lead.)

(c) Cross-connect from the SL-WH lead to the PABX connection for the desired function.

9. DISABLING HOOKSWITCH RESTORATION

9.01 The hookswitch restoration feature used in multibutton telephones allows a station user to preselect a line key and then remove the handset to intitiate a call. When the handset is returned to the cradle or the hookswitch is operated (hookswitch flash), the line key will be restored. To disable the hookswitch restoration feature, the following steps are taken:

(a) Remove telephone faceplate.

(b) Remove plastic trip arm by pulling up at the point directly above its mounting shaft.

(c) Remove torsion spring by sliding it off the mounting shaft.

(d) Reinstall telephone faceplate.

9.02 To enable the hookswitch restoration feature, the following steps are taken: (See Figure 3.)

(a) Remove telephone faceplate.

(b) Install torsion spring by sliding it onto the mounting shaft and hooking one end between the mounting shaft and the hookswitch operating arm.

(c) Install plastic trip arm by placing the notch in the trip arm on the end of the torsion spring (opposite the end hooked behind the operating arm) and pressing the trip arm onto the mounting shaft.

(d) When the hookswitch is operated, the plastic trip arm should engage with the latch arm.

(e) Reinstall telephone faceplate.

TCI Library: www.telephonecollectors.info

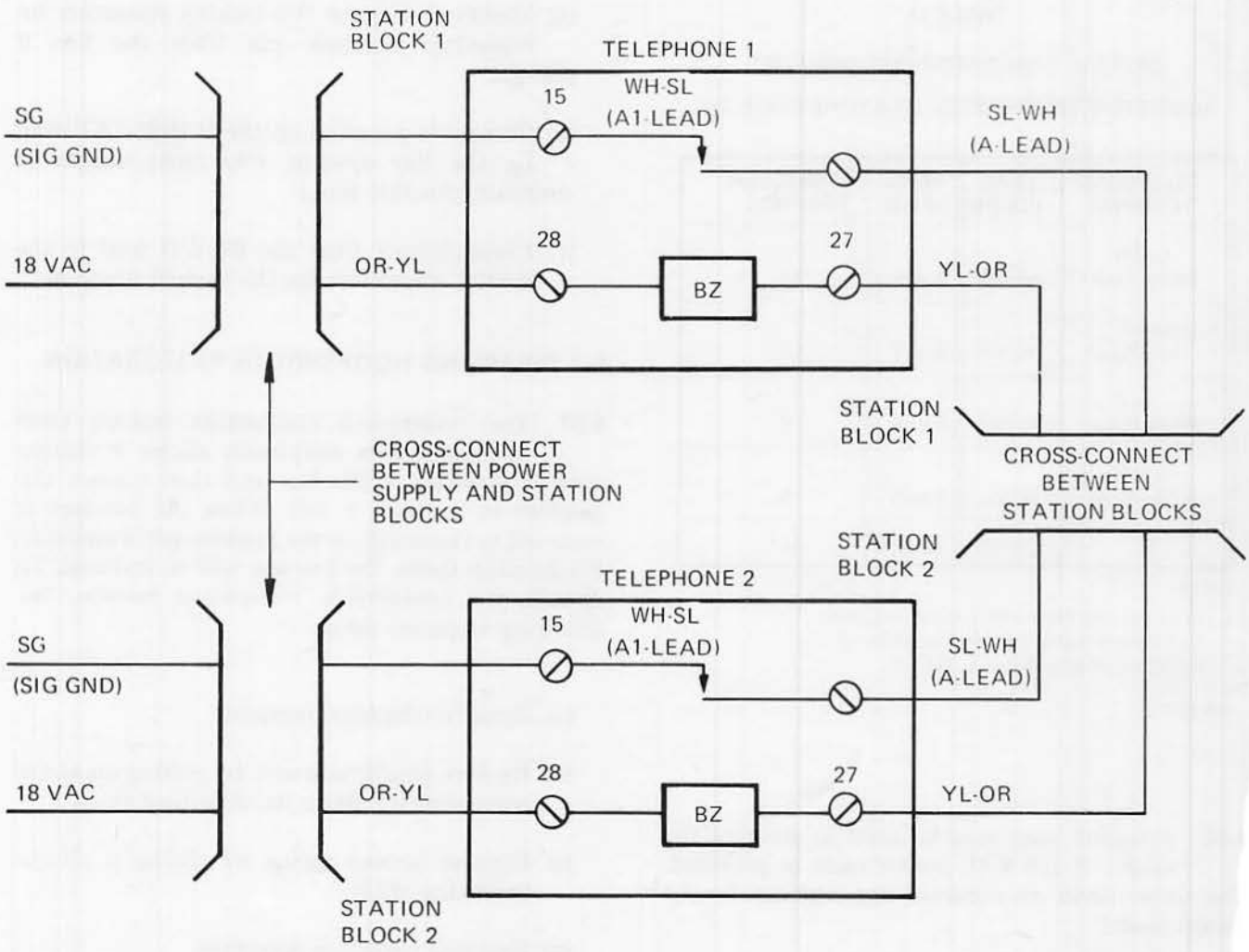

NOTES:

1. THE ARRANGEMENT SHOWN IS USING LINE 9 OF A TELEPHONE WITH FEATURE CODES 42 AND 46 AS AN EXAMPLE. IF ANOTHER LINE IS USED, SUBSTITUTE THE APPROPRIATE A1 AND A-LEADS FOR THAT LINE.
2. IN THE 10-BUTTON TELEPHONE, GROUND IS CONNECTED TO TERMINAL 15 (WH-SL). NO CROSS-CONNECT IS NECESSARY FOR THIS LEAD.
3. FOR TELEPHONES WITH FEATURE CODE 76, A LAMP GROUND LEAD IS USED INSTEAD OF THE OR-YL LEAD (PROVIDED THE PROPER STATION CROSS-CONNECTIONS ARE MADE).

AW 82-492

Figure 2: Circuit Diagram For Signal Buzzer

TCI Library: www.telephonecollectors.info

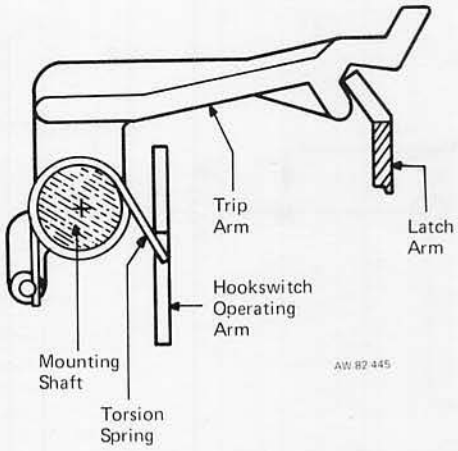

Figure 3: Installation of Trip Arm and Torsion Spring

9.03 Whenever the hookswitch restoration feature is disabled, it may become necessary to shorten or lengthen the spring connected to the operating arm to insure proper hookswitch operation. Proper operation requires the cradle to be fully depressed by the weight of the handset and return to the full up position when the handset is off-hook.

9.04 Earlier models of multibutton telephones may not provide the preselect function with the hookswitch restoration feature. These models include an adjustment screw on the latch arm rather than the plastic trip arm or torsion spring. To disable hookswitch restoration in these telephones, the following steps are taken:

(a) Remove telephone faceplate and housing.

(b) Turn the screw in the latch arm approximately five turns counterclockwise.

(c) Reinstall telephone faceplate and housing.

10. CONNECTING 174B CALL ANNOUNCER

10.01 A 174B call announcer is used to provide tone and voice signaling to, and handsfree answerback from, an intercom station. The 174B call announcer connects to 10-button telephones as follows:

(a) Connect BK (-24 VDC) lead of call announcer together with VI-BL lead of telephone to terminal 17 of terminal board.

(b) Connect YL (GND) lead of call announcer together with YL-OR lead of telephone to terminal 27 of terminal board.

(c) Connect RD (CA RST) lead of call announcer together with VI-BN lead of telephone to terminal 21 of terminal board.

(d) Connect GN (CA RT) lead of call announcer together with VI-GN lead of telephone to terminal 13 of terminal board. (The VI-GN lead must be moved from RR on network.)

11. BUSY LAMP CONNECTIONS

11.01 Busy lamp connections may vary depending on the type of key system being used. Modifications for the 10-button desk telephones with feature codes 42 and 46 should be as follows: (Refer to Figure 4.)

(a) Remove GN-WH lead from terminal 22 and connect to terminal 16 on the telephone terminal board.

(b) Connect one 1N4004 diode between terminals 22 and 16 on the terminal board, and connect another 1N4004 diode between terminals 22 and 28 on the terminal board as shown in Figure 4.

(c) Connect OR-YL mounting cord lead to terminal 28 of terminal board.

11.02 Modifications for the 10-button desk telephones with feature code 76 should be as follows: (Refer to Figure 5.)

(a) Connect one 1N4004 diode from terminal 22 to terminal 28 on telephone terminal board as shown in Figure 5.

(b) Connect any "LG" lamp ground lead to terminal 28 on the telephone terminal board. (Proper station cross-connections must be made to allow the use of an LG lead.)

TCI Library: www.telephonecollectors.info

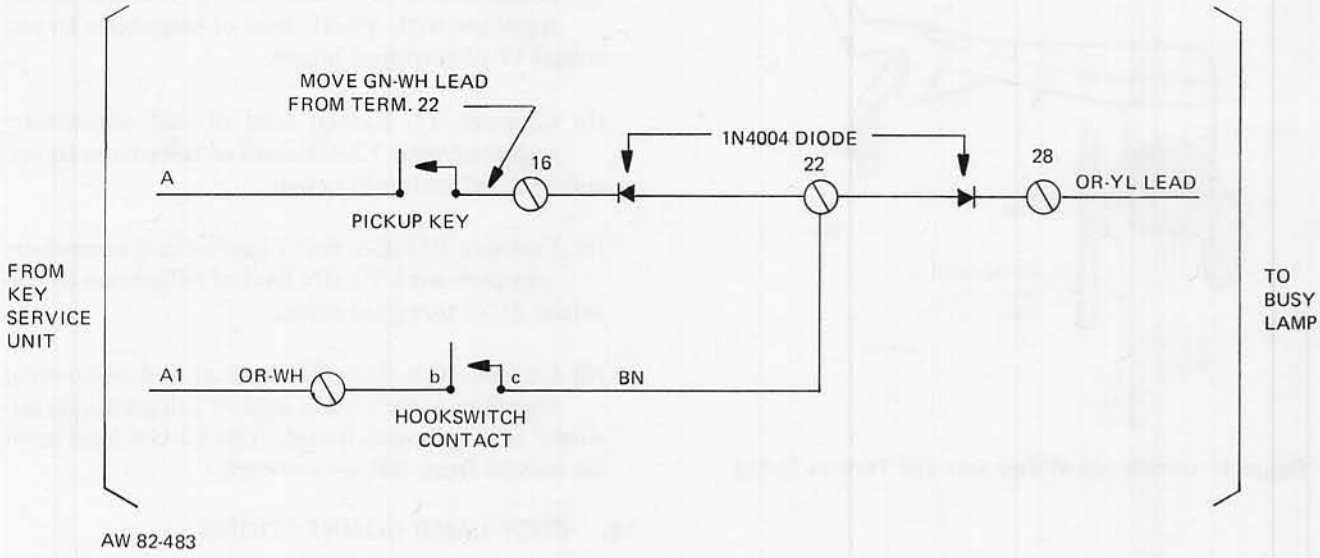

Figure 4: Busy Lamp Connections For 10-Button Telephones with Feature Codes 42 and 46

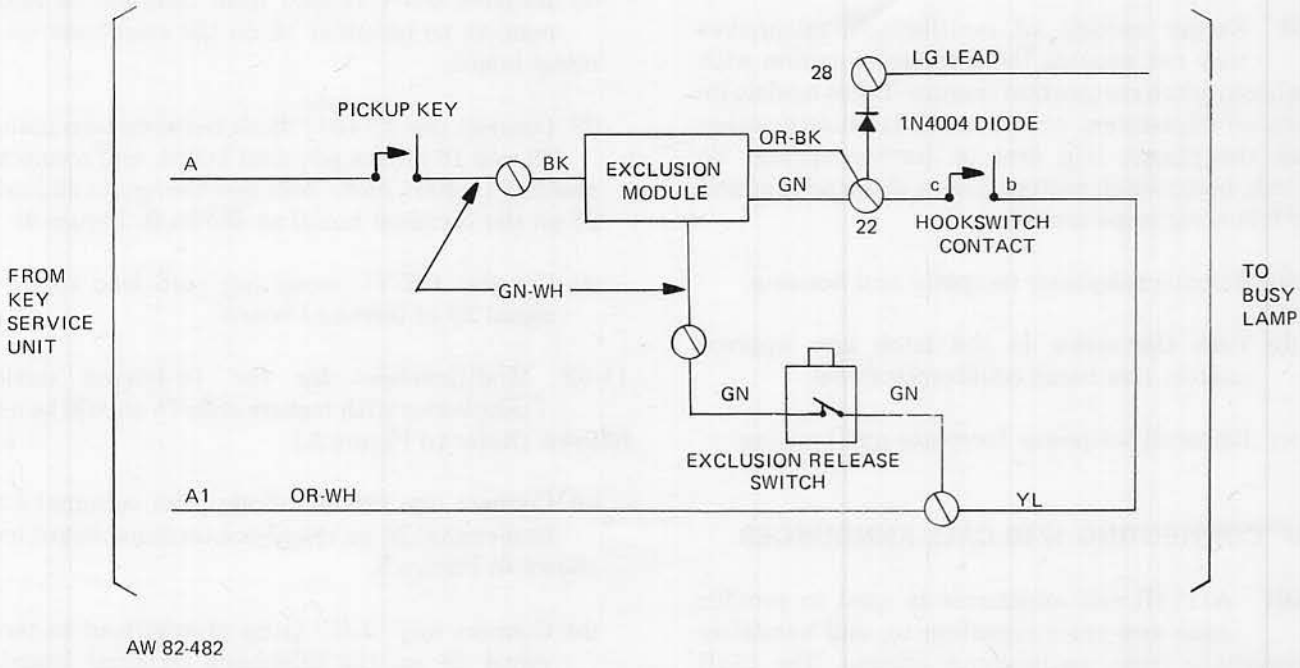

Figure 5: Busy Lamp Connections For 10-Button Telephones with Feature Code 76

TCI Library: www.telephonecollectors.info

10-BUTTON, PUSHBUTTON DIAL, DESK TELEPHONES

REPLACEMENT PARTS

1. GENERAL

1.01 This document covers the 10-button, pushbutton dial, desk telephone. (See Figure 1.) An exploded-view drawing of the telephone with major assembly groups (see Figure 2) and a replacement parts list (see Table A) are included.

1.02 This section is reissued to reflect changes in the 10-button, pushbutton dial, desk telephone and to incorporate the changes listed in the Telephone Apparatus Practices Change Notice, Section 11-510-100. Whenever this section is reissued, reason for reissue will be listed in this paragraph.

1.03 For additional information on description and installation of the telephones, refer to Section 50-830-103. The circuit labels appear in Section 50-830-105. Related documents of the ITT Telephone Apparatus Practices Manual provide information on components.

1.04 The Model 2830 desk telephones are 10-button, pushbutton dial, anti-sidetone type units that operate efficiently over a wide range of loop resistances and line impedances. These telephones are designed for use with key telephone systems, such as the ITT 1A2 System, where several telephones have access to the same lines, CO trunks, or intercom lines.

1.05 The Model 2830 desk telephones are identified by a code number stamped in ink on the bottom of the base plate. Refer to Section 50-830-103 of the ITT Telephone Apparatus Practices Manual for ordering information and for an explanation of each code number.

AW 82-365

Figure 1: 10-Button, Pushbutton Dial, Desk Telephone

TCI Library: www.telephonecollectors.info

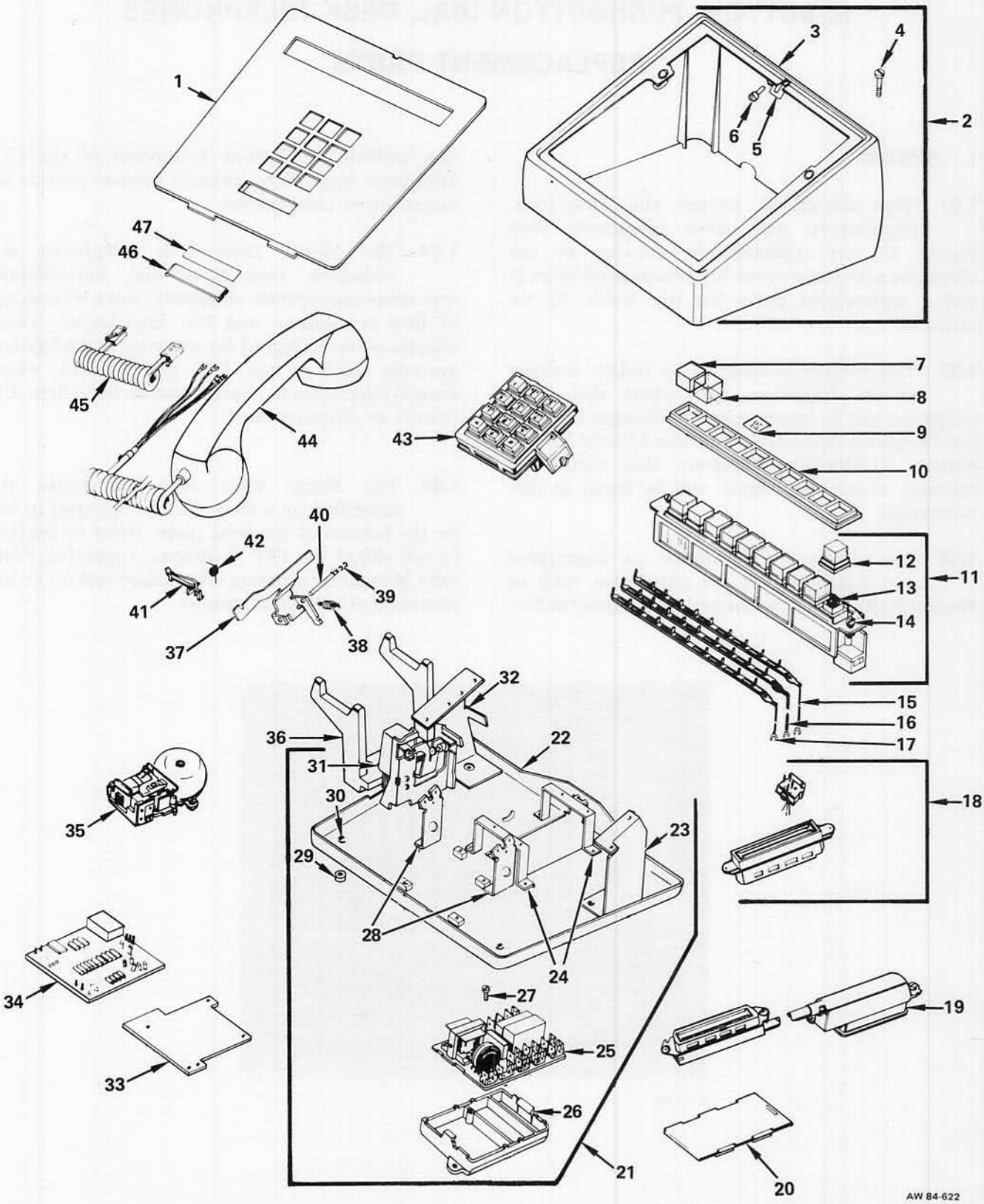

Figure 2: 10-Button, Pushbutton Dial, Desk Telephone, Exploded View

TCI Library: www.telephonecollectors.info

TABLE A

REPLACEMENT PARTS LIST

INDEX NO	PART NUMBER	DESCRIPTION	QUANTITY USED			
		10-Button, Pushbutton Dial, Desk Telephone	2830/40	2830/42	2830/46	2830/76
1	181142-***	Faceplate	1	1	–	–
1	181687-***	Faceplate	–	–	1	1
2	181102-0**	Housing Assembly	1	1	1	1
2	187906-0**	Housing Assembly, Full-Modular	–	1	1	1
3	181104-0**	Housing	1	1	1	1
3	187922-0**	Housing, Full-Modular	–	1	1	1
4	095992-102	Screw, Housing	2	2	2	2
5	181100-101	Spring, Latch	1	1	1	1
6	181289-101	Screw, Latch Spring	1	1	1	1
7	181131-102	Cap, Red	1	1	1	1
8	181131-101	Cap, Clear	9	9	9	9
9	181281-101	Tab, Key Designation (Strip Of 12)	1	1	1	1
10	181287-101	Collar, Key Strip	1	1	1	1
11	181137-104	Key Assembly	1	1	1	–
11	182552-102	Key Assembly	–	–	–	1
12	181122-101	Button	10	10	10	10
13	000051-00A	Lamp	9	9	9	9
14	095992-102	Screw	2	2	2	2
15	181292-101	Strip, Contact (GN Wire)	1	1	1	1
16	181292-102	Strip, Contact (RD Wire)	1	1	1	1
17	181292-105	Strip, Contact (SL Wire)	1	1	1	1
18	181154-101	Cord, Internal	1	1	1	–
18	182546-101	Cord, Internal	–	–	–	1
19	184371-102	Cord, Mounting (50-Conductor)	1	1	1	1
20	181290-101	Slide	1	1	1	1
21	181250-101	Base Assembly	1	1	1	1
22	181141-101	Plate, Base	1	1	1	1
23	181251-101	Bracket, Key Right	1	1	1	1
24	181255-101	Bracket, Plug	2	2	2	2
25	181427-102	PC Network (#183070-102)[1]	1	1	1	1
26	182175-101	Spacer, Network	1	1	1	1
27	096407-103	Screw, Network Mounting	1	1	1	1
28	181254-102	Bracket, Dial	2	2	2	2
29	182337-101	Foot	4	4	4	4
30	082486-102	Rivet, Foot	4	4	4	4
31	181260-101	Cradle Switch Assembly[1]	1	1	1	1
32	181150-102	Left Bracket Assembly	1	1	1	1
	185619-101	Left Trip Bracket Assembly	1	1	1	1
	181252-101	Bracket, Key Left	1	1	1	1
	185618-101	Bracket, Trip	1	1	1	1
33	181298-101	Terminal Board	1	1	1	1
34	182386-101	PC Board (Exclusion)	–	–	–	1

TCI Library: www.telephonecollectors.info

TABLE A

REPLACEMENT PARTS LIST (Cont)

INDEX NO	PART NUMBER	DESCRIPTION	QUANTITY USED			
		10-Button, Pushbutton Dial, Desk Telephone	2830/40	2830/42	2830/46	2830/76
35	000148-DBA	Ringer[1]	1	1	1	1
36	183105-102	Switch Hook Assembly	1	1	1	1
	182900-101	Cradle, Switch Hook	1	1	1	1
	181145-101	Screw, Switch Hook Cradle	3	3	3	3
	185494-101	Operating Arm Assembly	1	1	1	1
	185487-101	Arm, Operating	1	1	1	1
	075307-104	Spring, Cradle Return	1	1	1	1
	181282-101	Shaft, Pivot	1	1	1	1
	073538-110	Ring, Retainer	1	1	1	1
37	185488-101	Arm, Latch	1	1	1	1
38	181151-101	Spring, Latch Arm	1	1	1	1
39	073538-110	Ring, Retainer	2	2	2	2
40	181152-101	Pin, Pivot	1	1	1	1
41	185486-101	Arm, Trip	1	1	1	1
42	185485-101	Spring, Torsion	1	1	1	1
43	006300-0PG	Dial Assembly, Tel-Pulse, Metropolitan (Letters And Numerals)[1, 2]	1	–	–	–
43	004600-0PG	Dial Assembly, Pushbutton Digital, Metropolitan (Letters And Numerals)[1, 3]	–	1	1	1
43	003600-0PG	Dial Assembly, Pushbutton Tel-Touch, Metropolitan (Letters And Numerals)[1, 2]	–	1	1	1
43	004600-0PD	Dial Assembly, Pushbutton Digital, Regular (Numerals Only)[1, 4]	–	1	1	1
43	003600-0PD	Dial Assembly, Pushbutton Tel-Touch, Regular (Numerals Only)[1, 2]	–	1	1	1
44	0065**-0C2	Handset Assembly, Nonmodular[1]	1	1	1	1
44	0065**-0M2	Handset Assembly, Modular[1]	–	1	1	1
45	9018**-072	Cord, Handset, Modular	–	1	1	1
46	087514-101	Retainer, Number Card	1	1	1	1
47	087513-101	Card, Number	1	1	1	1

TCI Library: www.telephonecollectors.info

TABLE A

REPLACEMENT PARTS LIST (Cont)

INDEX NO	PART NUMBER	DESCRIPTION	QUANTITY USED			
		10-Button, Pushbutton Dial, Desk Telephone	**2830/40**	**2830/42**	**2830/46**	**2830/76**
47	087513-102	Card, Number, Strip Of 6 (Not Shown)[5]	–	–	–	–
	600152-611 -001	Jack Assembly, Handset Cord, Modular (Not Shown)	–	1	1	1
	182990-105	Insulator Assembly, Modular (Not Shown)	–	1	1	1
	182391-101	Bracket, Quick-Step (Not Shown)[2]	1	–	–	–
	181973-101	Pushbutton, Operator Recall (Not Shown)	–	–	1	–
	181971-101	Pushbutton, Exclusion Release (Not Shown)	–	–	–	1
	187944-101	Nameplate, ITT (Not Shown)	–	1	1	1

AW 84-788

NOTES:

1 Refer to Component Parts Section of this manual for Assembly Parts List.
2 These products have been discontinued, but are included to provide a source of information for telephones still in service.
3 The 004600-0PG dial replaces the 003600-0PG dial.
4 The 004600-0PD dial replaces the 003600-0PD dial.
5 These parts must be ordered separately.
** Substitute 2-digit color code when ordering.
*** Substitute 3-digit color code when ordering faceplate.

CODE	COLOR	CODE	COLOR	CODE	COLOR	CODE	COLOR
101	Charcoal	104	Light Gray	107	Cocoa Brown	110	Clear
102	Light Green	105	Burnt Orange	108	Harvest Gold	111	Woodgrain
103	Muted Beige	106	Light Ash	109	Cherry Red		

TCI Library: www.telephonecollectors.info

10-BUTTON, PUSHBUTTON DIAL, DESK TELEPHONES

CIRCUIT LABELS

1. GENERAL

1.01 This document covers the 10-button, pushbutton dial, desk telephones. (See Figure 1.) Circuit labels for 10-button, pushbutton dial, desk telephones are included. (See Table A.)

AW 86-346

Figure 1: 10-Button, Pushbutton Dial, Desk Telephone

1.02 This section is reissued to provide the latest issue of circuit labels for the following 10-button, pushbutton dial, desk telephones:

(a) Model 2830, Types 42 and 46

(b) Model 2830, Type 76

1.03 For additional information on description and installation of the telephones, refer to Section 50-830-103. A replacement parts list and an exploded-view drawing for the telephones are contained in Section 50-830-104. Related documents of the ITT Telephone Apparatus Practices Manual provide information on components.

1.04 The Model 2830 desk telephones are identified by a code number stamped in ink on the bottom of the base plate. Refer to Section 50-830-103 of the ITT Telephone Apparatus Practices Manual for ordering information and for an explanation of each code number.

1.05 The Model 2830 desk telephones are 10-button, pushbutton dial, anti-sidetone type units that operate efficiently over a wide range of loop resistances and line impedances. These telephones are designed for use with key telephone systems, such as the ITT 1A2 System, where several telephones have access to the same lines, CO trunks, or intercom lines.

TABLE A

LIST OF CIRCUIT LABELS

MODEL NO	TYPE NO	FIGURE NO
2830	42, 46	2
2830	76	3
2830	40T	4

AW 86-365

TCI Library: www.telephonecollectors.info

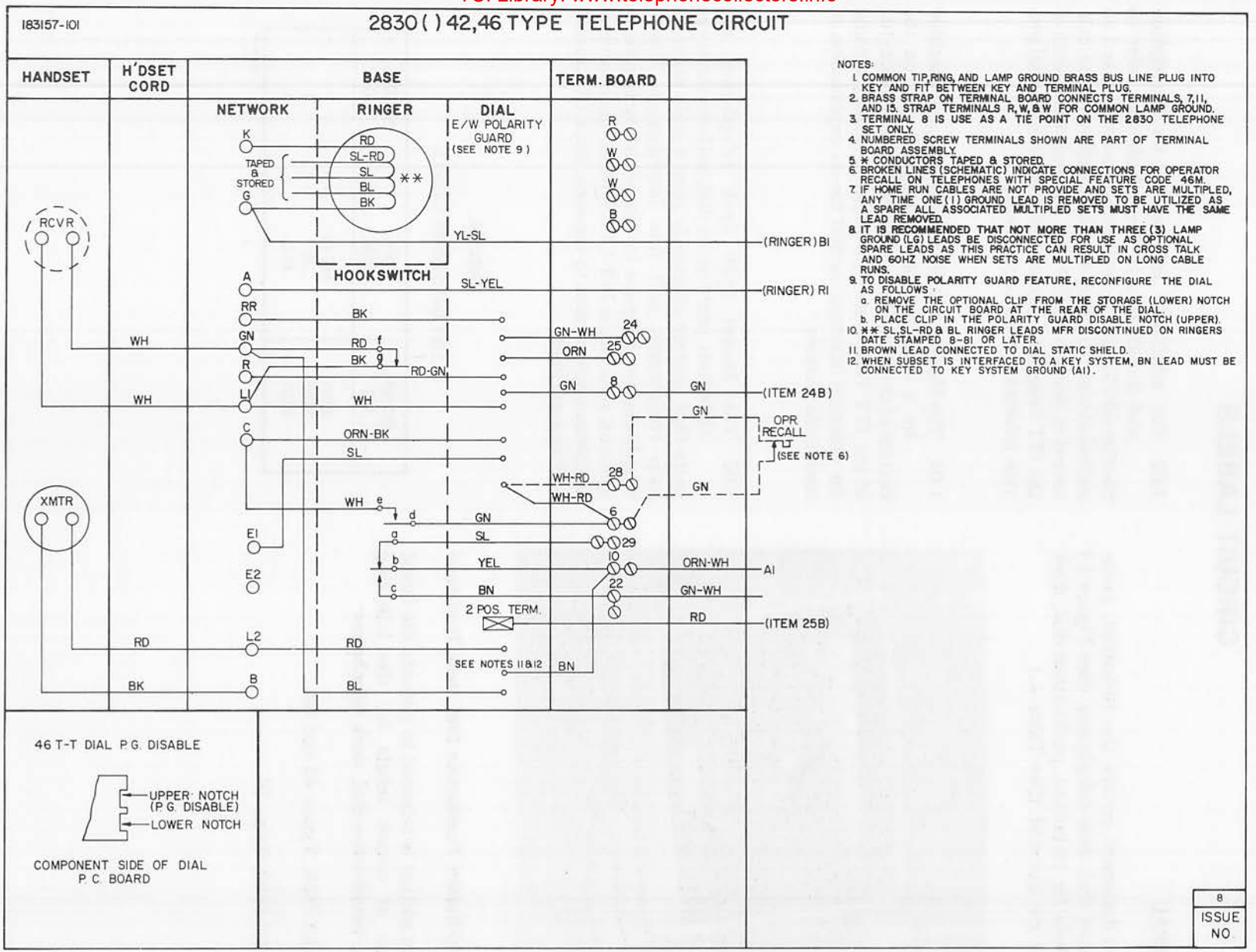

Figure 2: Circuit Label, Model 2830 Types 42, 46 (Sheet 1 of 2)

TCI Library: www.telephonecollectors.info

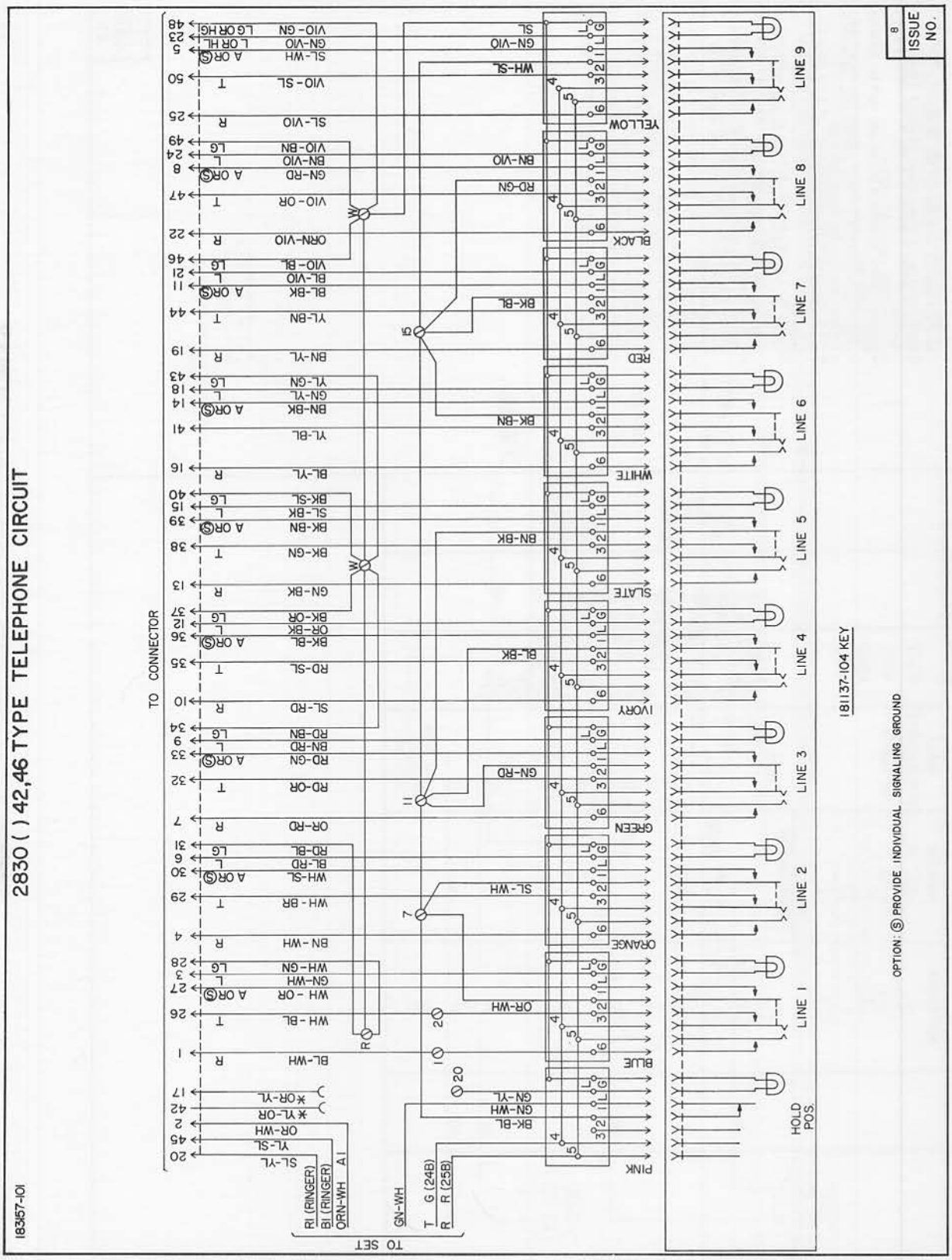

Figure 2: Circuit Label, Model 2830 Types 42, 46 (Sheet 2 of 2)

TCI Library: www.telephonecollectors.info

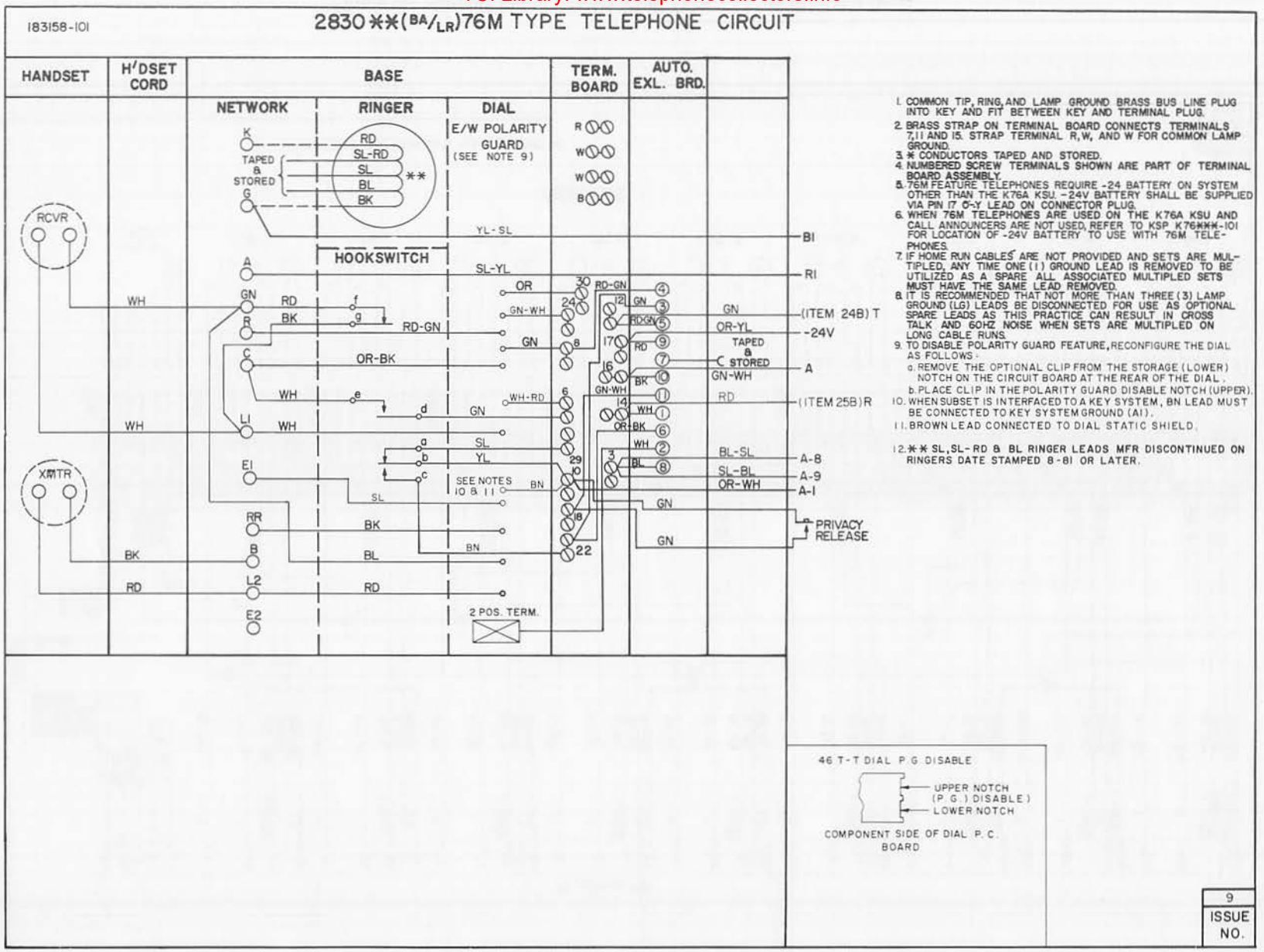

Figure 3: Circuit Label, Model 2830 Type 76 (Sheet 1 of 2)

TCI Library: www.telephonecollectors.info

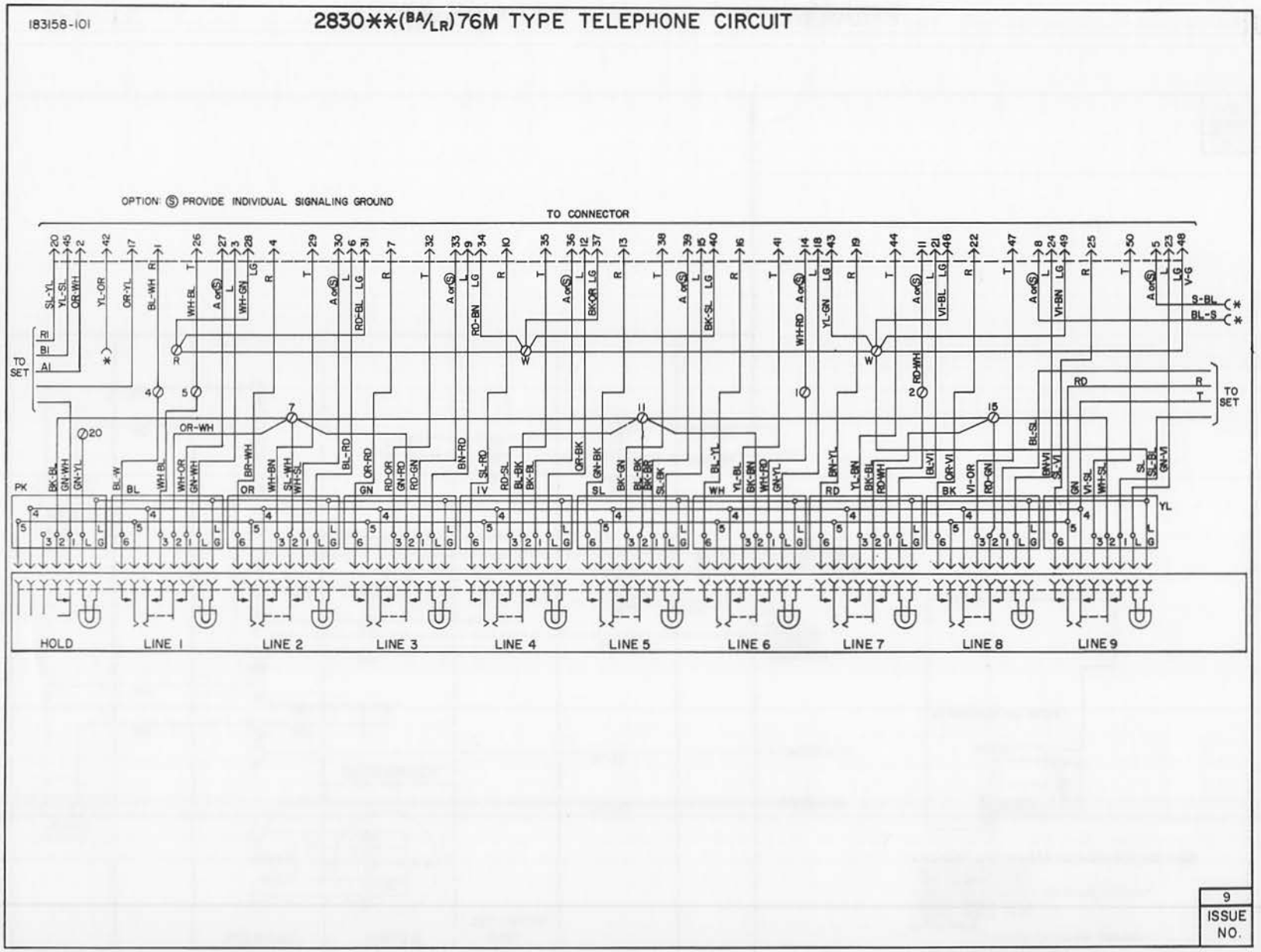

Figure 3: Circuit Label, Model 2830 Type 76 (Sheet 2 of 2)

TCI Library: www.telephonecollectors.info

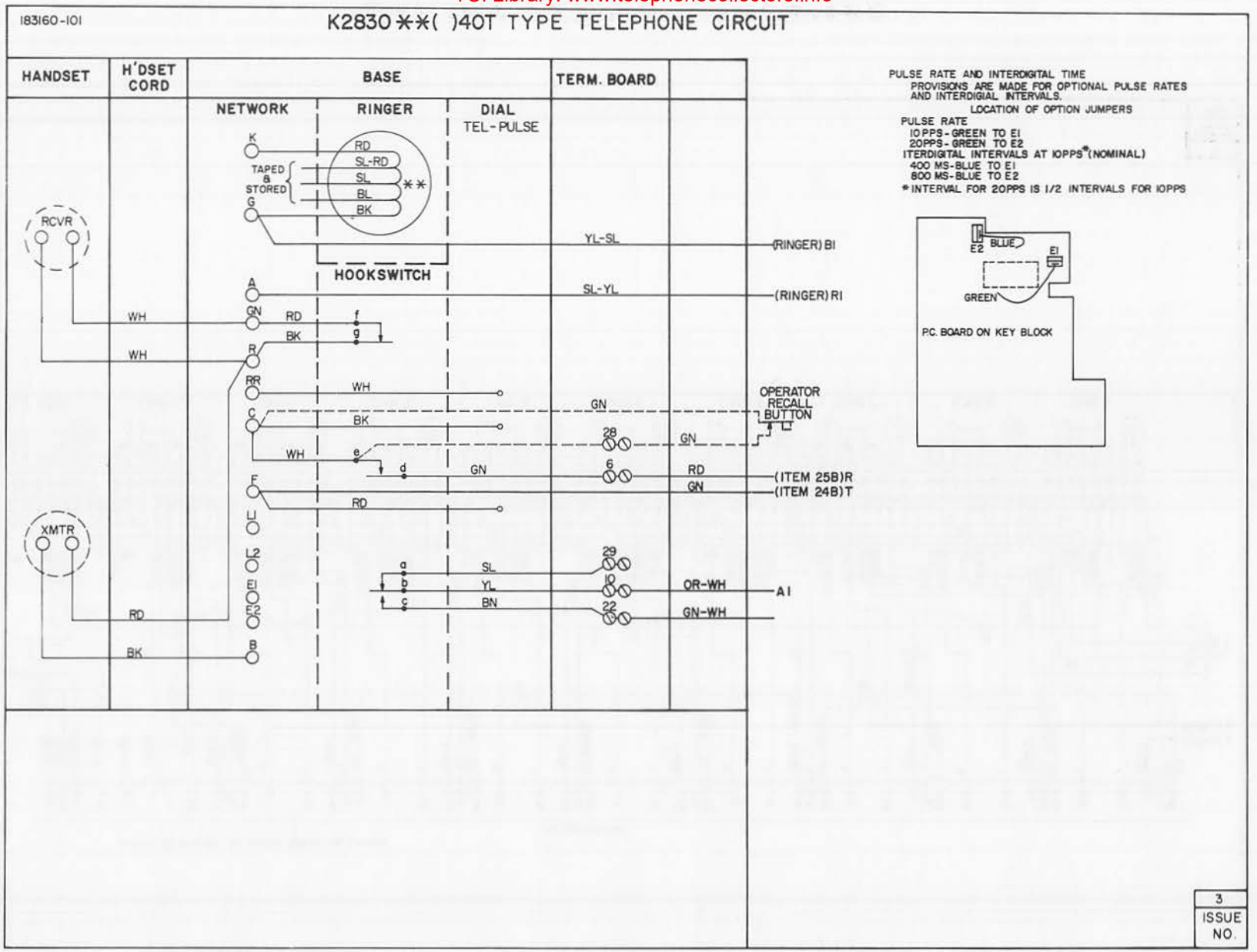

Figure 4: Circuit Label, Model 2830 Type 40T (Sheet 1 of 2)

TCI Library: www.telephonecollectors.info

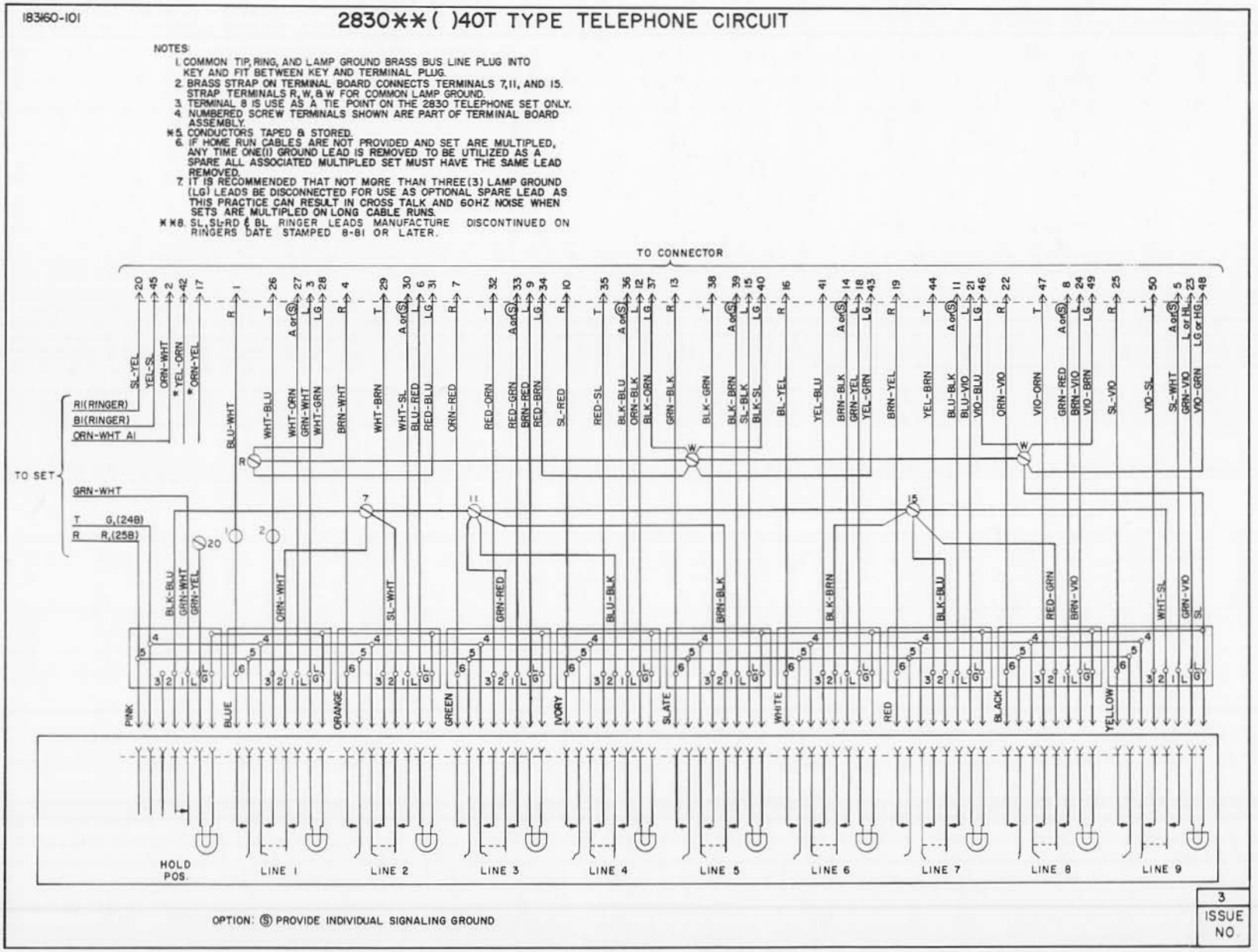

Figure 4: Circuit Label, Model 2830 Type 40T (Sheet 2 of 2)

TCI Library: www.telephonecollectors.info

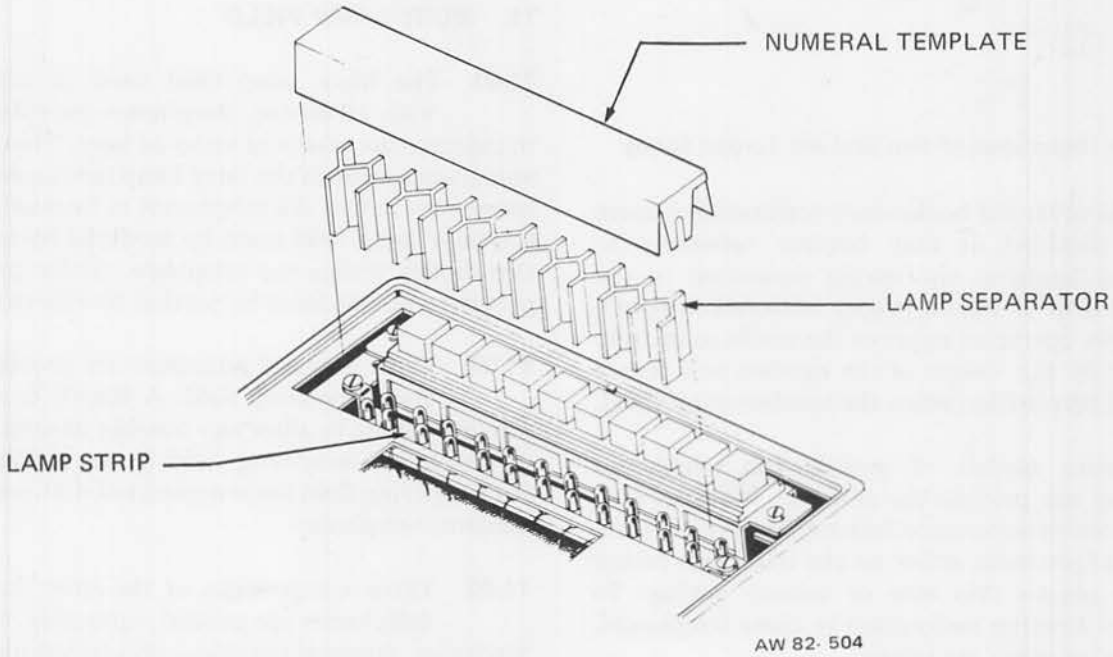

Figure 4: Installation of Lamp Separator and Numeral Template

TCI Library: www.telephonecollectors.info

20-BUTTON, ROTARY DIAL, DESK TELEPHONES
GENERAL DESCRIPTION

CONTENTS PAGE

1. GENERAL DESCRIPTION 1
MODEL 831** ( ) 42 2
MODEL 831** ( ) 46 3
MODEL 831** ( ) 76 3
2. INSTALLATION 3
3. MAINTENANCE 3
4. SPEAKERPHONE 3
5. BUTTON CONVERSIONS 3
6. BUZZER INSTALLATION 3
7. DESIGNATION TABS 5
8. GROUNDING PUSHBUTTON 5
9. DISABLING HOOKSWITCH RESTORATION 5
10. CONNECTING 174B CALL ANNOUNCER 7
11. BUSY LAMP CONNECTIONS 7

1. GENERAL DESCRIPTION

1.01 This document covers the 20-button, rotary dial, desk telephone. (See Figure 1.) A general description plus information peculiar to 20-button, rotary dial, desk telephones is included.

1.02 Whenever this section is reissued, reason for reissue will be listed in this paragraph.

1.03 For additional information, refer to Section 50-831-101, Replacement Parts, and to Section 50-831-102, Circuit Labels. For information on installation, maintenance, and components or equipment, consult related documents of the ITT Telephone Apparatus Practices Manual.

AW 82-366

Figure 1: 20-Button, Rotary Dial, Desk Telephone

1.04 The Model 831 desk telephones are 20-button, rotary dial, antisidetone type units that operate efficiently over a wide range of loop resistances and line impedances. These telephones are designed for use with key telephone systems, such as the ITT 1A2 System, where several telephones have access to the same lines, CO trunks, or intercom lines. All models are equipped with a mounting cord terminated in two Amphenol-type connectors.

1.05 The Model 831 desk telephones are identified by a code number stamped in ink on the bottom of the base plate. Refer to ordering information in Table A for an explanation of each code number.

1.06 Nineteen pushbutton keys on the telephone are used for line, trunk, or intercom lines. The red key on the far left is used as a hold key and allows any selected line or trunk to be placed in a hold condition. All remaining keys may be used as line keys or may be wired as either intercom lines or signal keys.

TCI Library: www.telephonecollectors.info

TABLE A

ORDERING INFORMATION – TELEPHONES

CODE NUMBERS

TELEPHONE CODE NUMBERS ARE FORMED IN SIX STEPS AS FOLLOWS:

831 15 O BA 42 M

(1) Type of Instrument (See Part 1)
(2) Color (See Part 2)
(3) Version (See Part 3)
(4) Ringer (See Part 4)
(5) Special Feature (See Part 5)
(6) Dial (See Part 6)

PART 1 TYPE OF INSTRUMENT

CODE	DESCRIPTION	COLOR OFFERED	VERSION OFFERED	RINGER OFFERED	FEATURE OFFERED	DIAL OFFERED
831	20-Button, Rotary Dial, Desk Telephone	00, 05, 13, 15, 44, and 45 (Available On All Models)	O	BA, LR	42, 46, 76	M

REFER TO INDIVIDUAL UNIT DESCRIPTION FOR COMPLETE DESCRIPTION OF FEATURE COMBINATIONS

PART 2 COLORS		PART 3 VERSIONS		PART 4 RINGERS		PART 5 SPECIAL FEATURES		PART 6 DIALS	
CODE	COLORS	CODE	VERSIONS	CODE	RINGERS	CODE	SPECIAL FEATURES	CODE	DIALS
00	Black	O	Conventional	LR	Less Ringer	42	Equipped To Operate w/External Speakerphone	M	Metropolitan (Letters & Numerals)
05	Moss Green								
13	Beige			BA	Straight Line	46	42 Combined With Operator Recall Button		
15	White								
44	Light Ash					76	42 Combined With Automatic Exclusion and Release Button		
45	Cocoa Brown								

AW 82-343

1.07 A signal lamp beneath each of the nineteen line keys indicates status of the associated line. (See Table B.)

1.08 All 20-button telephones are equipped with a hookswitch restoration feature that restores any operated line key when the hookswitch is operated.

1.09 Variations in the Model 831 series telephones are briefly described below. Circuit label drawings for these models are contained in Section 50-831-102.

MODEL 831** ( ) 42

1.10 The Model 831** ( ) 42 is a standard 20-button, rotary dial, desk type, key telephone equipped to operate with an external speakerphone. A set of contacts in the dial assembly disconnects the handsfree speaker during dialing; also, contacts in the hookswitch assembly provide on/off control of the handsfree equipment. The Model 831** ( ) 42 is equipped with a 100-conductor mounting cord fitted with two 50-pin (25-pair) male connectors.

TCI Library: www.telephonecollectors.info

TABLE B

LINE KEY SIGNALS

CONDITION	LAMP INDICATION
Idle	Lamp Extinguished
Busy	Lamp Lit
Hold	Lamp Winking
Call Incoming	Lamp Flashing

AW 81-96

MODEL 831 ( ) 46**

1.11 The Model 831** ( ) 46 is the same as the Model 831** ( ) 42 with the addition of an operator recall button. This button, containing normally closed contacts, can be used to recall the operator if the hookswitch restoration feature is used.

MODEL 831 ( ) 76**

1.12 The Model 831** ( ) 76 is the same as the Model 831** ( ) 42 with the addition of an automatic exclusion (privacy) circuit with a release button. This release button contains normally open contacts. Where this feature is used, all telephones in the key system must contain the exclusion circuit and a release button.

2. INSTALLATION

2.01 Since these telephones are equipped with a connector-terminated mounting cord, installation consists of inserting the connectors into the jacks at the station connecting block and pressing to engage. For specific wiring information, refer to the appropriate circuit label in Section 50-831-102. Cable connections for 20-button telephones with feature codes 42 and 46 are listed in Table C. Cable connections for 20-button telephones with feature code 76 that differ from those listed in Table C are listed in Table D. For general installation information and installation of repair parts, refer to the applicable section of the ITT Telephone Apparatus Practices Manual.

3. MAINTENANCE

3.01 For general maintenance information, refer to the maintenance section of the ITT Telephone Apparatus Practices Manual. For a pictorial view and parts list, refer to Section 50-831-101.

4. SPEAKERPHONE

4.01 An external speakerphone may be installed on 20-button telephones. Most speakerphones provide the following additional features:

(a) Handsfree telephone operation. (Handsfree talking and dialing.)

(b) On-hook dialing.

(c) Automatic switching from speakerphone to handset operation.

(d) Transmitter muting for private conversation.

(e) Visual indication when system is in use.

(f) Cutoff of common ringer or other signaling devices when desired.

5. BUTTON CONVERSIONS

5.01 Any line key may be converted to signaling mode by removing the slotted head pin from the plunger shank. The slotted head pin is removed by turning clockwise. (On earlier models of the 20-button telephone the pin is removed by turning counterclockwise.)

6. BUZZER INSTALLATION

6.01 A buzzer may be installed as the signaling device of a telephone receiving an intercom call. The buzzer may be either installed on the dial mounting bracket or mounted externally. For telephones with feature codes 42 and 46, buzzer leads must be connected to the OR-YL and YL-OR leads inside the telephone. The OR-YL and YL-OR leads are spare and can be found taped and stored inside the telephone. For telephones with feature code 76, a lamp ground lead is used instead of the OR-YL lead (provided the proper station cross-connections are made). Buzzers selected for this use must operate at 18 VAC, 60 Hz. (See Figure 2.)

TCI Library: www.telephonecollectors.info

TABLE C
CABLE CONNECTIONS FOR 20-BUTTON TELEPHONES
(FEATURE CODES 42 AND 46)

LINES 1 THROUGH 7				LINES 8 THROUGH 13				LINES 14 THROUGH 19			
TELEPHONE TERMINAL	LEAD COLOR	LEAD DESIG.	CONNECTOR TERMINAL	TELEPHONE TERMINAL	LEAD COLOR	LEAD DESIG.	CONNECTOR TERMINAL	TELEPHONE TERMINAL	LEAD COLOR	LEAD DESIG.	CONNECTOR TERMINAL
Line 1 (Blue Plug)	WH-BL	T	26	Line 8 (Black Plug)	VI-OR	T	47	Line 14 (Slate Plug)	BK-GN	T	38
	BL-WH	R	1		OR-VI	R	22		GN-BK	R	13
	WH-OR	A or S	27		GN-RD	A or S	8		BK-BN	A or S	39
	WH-GN	LG	28		VI-BN	LG, P3 or 1R	49		BK-SL	LG	40
	GN-WH	L	3		BN-VI	L, P4 or 1T	24		SL-BK	L	15
Line 2 (Orange Plug)	WH-BN	T	29	Line 9 (Yellow Plug)	VI-SL	T	50	Line 15 (White Plug)	YL-BL	T	41
	BN-WH	R	4		SL-VI	R	25		BL-YL	R	16
	WH-SL	A or S	30		SL-WH	A or S	5		BN-BK	A or S	14
	RD-BL	LG	31		VI-GN	LG or T1	48		YL-GN	LG	43
	BL-RD	L	6		GN-VI	L or R1	23		GN-YL	L	18
Line 3 (Green Plug)	RD-OR	T	32	10	OR-WH	A1	2	Line 16 (Red Plug)	YL-BN	T	44
	OR-RD	R	7	G	YL-SL	B1	45		BN-YL	R	19
	RD-GN	A or S	33	A	SL-YL	R1	20		BL-BK	A or S	11
	RD-BN	LG	34	15	YL-OR	BL, AG or Spare	42		VI-BL	LG	46
	BN-RD	L	9	6	OR-YL	SG, LK or Spare	17		BL-VI	L	21
Line 4 (Ivory Plug)	RD-SL	T	35	Line 10 (Blue Plug)	WH-BL	T	26	Line 17 (Black Plug)	VI-OR	T	47
	SL-RD	R	10		BL-WH	R	1		OR-VI	R	22
	BK-BL	A or S	36		WH-OR	A or S	27		GN-RD	A or S	8
	BK-OR	LG	37		WH-GN	LG	28		VI-BN	LG	49
	OR-BK	L	12		GN-WH	L	3		BN-VI	L	24
Line 5 (Slate Plug)	BK-GN	T	38	Line 11 (Orange Plug)	WH-BN	T	29	Line 18 (Yellow Plug)	VI-SL	T	50
	GN-BK	R	13		BN-WH	R	4		SL-VI	R	25
	BK-BN	A or S	39		WH-SL	A or S	30		SL-WH	A or S	5
	BK-SL	LG	40		RD-BL	LG	31		VI-GN	LG	48
	SL-BK	L	15		BL-RD	L	6		GN-VI	L	23
Line 6 (White Plug)	YL-BL	T	41	Line 12 (Green Plug)	RD-OR	T	32	Line 19 (Violet Plug)	YL-SL	T	45
	BL-YL	R	16		OR-RD	R	7		SL-YL	R	20
	BN-BK	A or S	14		RD-GN	A or S	33		OR-WH	A or S	2
	YL-GN	LG	43		RD-BN	LG	34		YL-OR	LG	42
	GN-YL	L	18		BN-RD	L	9		OR-YL	L	17
Line 7 (Red Plug)	YL-BN	T	44	Line 13 (Ivory Plug)	RD-SL	T	35				
	BN-YL	R	19		SL-RD	R	10				
	BL-BK	A or S	11		BK-BL	A or S	36				
	VI-BL	LG	46		BK-OR	LG	37				
	BL-VI	L	21		OR-BK	L	12				

NOTES:

1. All lamp ground leads are common.
2. Lead designations P3, P4, LK T1, R1, AG and A1 are for speakerphone connections.
3. The YL-OR and OR-YL leads are spare leads and are taped and stored inside the telephone.
4. The designation S indicates that the lead provides an individual signal ground.

AW 82-333

TCI Library: www.telephonecollectors.info

TABLE D

SPECIAL CABLE CONNECTIONS FOR

20-BUTTON TELEPHONES (FEATURE CODE 76)

TELEPHONE TERMINAL	LEAD COLOR	LEAD DESIG.	CONNECTOR TERMINAL
17	OR-YL	-24 VDC	17
Line 16 (Red Plug)	WH-RD	A or S	11
Line 17 (Black Plug)	RD-WH	A or S	8
Line 18 (Yellow Plug)	BL-SL	A or S	5
Line 19 (Violet Plug)	SL-BL	A or S	2

NOTE:

1. This table lists those connections that differ from the connections for feature codes 42 and 46 telephones shown in Table C.

AW 82-493

6.02 A buzzer may also be used in place of the ringer. A 105 VAC buzzer must be provided. The ringer leads are removed and replaced by the buzzer leads.

7. DESIGNATION TABS

7.01 Designation tabs are included with each telephone. These tabs are installed by removing the cap from each key, placing the tab in the cap, and reinstalling the cap. The caps are removed by squeezing the sides and lifting. Note that locking surfaces are located on each of the caps and keys. These locking surfaces must properly align when reinstalling.

8. GROUNDING PUSHBUTTON

8.01 Modifications are made to line 9 of the telephone if a grounding pushbutton is required. A grounding pushbutton is required in some PABX applications for transferring calls, originating calls during a power failure, or other special functions. To convert line 9 to a grounding pushbutton, the following modifications should be made:

(a) Modify button to non-locking operation by removing the interlock pin from line 9 plunger.

(b) Ground is provided on the WH-SL (A1) lead by the key system. (No cross-connect is necessary for this lead.)

(c) Cross-connect from the SL-WH lead to the PABX connection for the desired function.

9. DISABLING HOOKSWITCH RESTORATION

9.01 The hookswitch restoration feature used in multibutton telephones allows a station user to preselect a line key and then remove the handset to initiate a call. When the handset is returned to the cradle or the hookswitch is operated (hookswitch flash), the line key will be restored. To disable the hookswitch restoration feature, the following steps are taken:

(a) Remove telephone faceplate.

(b) Remove plastic trip arm by pulling up at the point directly above its mounting shaft.

(c) Remove torsion spring by sliding it off the mounting shaft.

(d) Reinstall telephone faceplate.

9.02 To enable the hookswitch restoration feature, the following steps are taken: (See Figure 3.)

(a) Remove telephone faceplate.

(b) Install torsion spring by sliding it onto the mounting shaft and hooking one end between the mounting shaft and the hookswitch operating arm.

(c) Install plastic trip arm by placing the notch in the trip arm on the end of the torsion spring (opposite the end hooked behind the operating arm) and pressing the trip arm onto the mounting shaft.

(d) When the hookswitch is operated, the plastic trip arm should engage with the latch arm.

(e) Reinstall telephone faceplate.

TCI Library: www.telephonecollectors.info

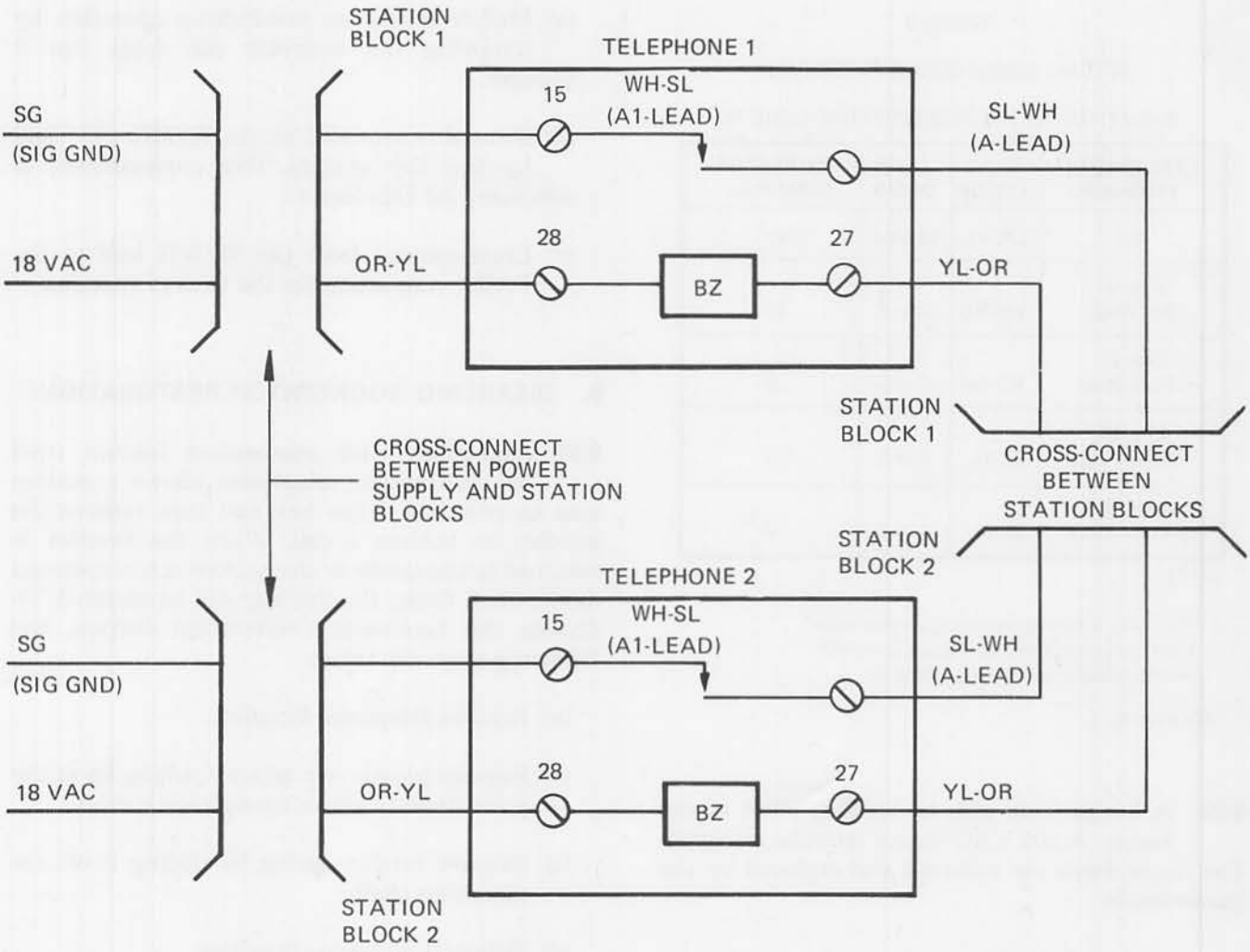

NOTES:

1. THE ARRANGEMENT SHOWN IS USING LINE 9 OF A TELEPHONE WITH FEATURE CODES 42 AND 46 AS AN EXAMPLE. IF ANOTHER LINE IS USED, SUBSTITUTE THE APPROPRIATE A1 AND A-LEADS FOR THAT LINE.

2. IN THE 20-BUTTON TELEPHONE, GROUND IS CONNECTED TO TERMINAL 15 (WH-SL LEAD). NO CROSS-CONNECT IS NECESSARY FOR THIS LEAD.

3. FOR TELEPHONES WITH FEATURE CODE 76, A LAMP GROUND LEAD IS USED INSTEAD OF THE OR-YL LEAD (PROVIDED THE PROPER STATION CROSS-CONNECTIONS ARE MADE).

AW 82-481

Figure 2: Circuit Diagram For Signal Buzzer

TCI Library: www.telephonecollectors.info

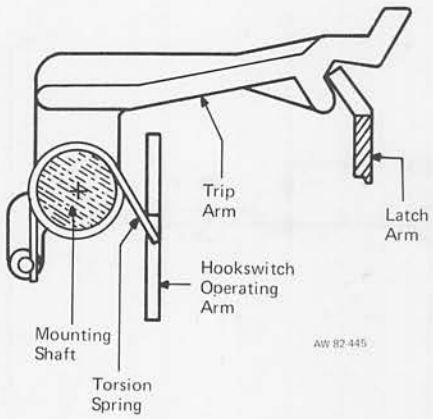

Figure 3: Installation of Trip Arm and Torsion Spring

9.03 Whenever the hookswitch restoration feature is disabled, it may become necessary to shorten or lengthen the spring connected to the operating arm to insure proper hookswitch operation. Proper operation requires the cradle to be fully depressed by the weight of the handset and return to the full up position when the handset is off-hook.

9.04 Earlier models of multibutton telephones may not provide the preselect function with the hookswitch restoration feature. These models include an adjustment screw on the latch arm rather than the plastic trip arm or torsion spring. To disable hookswitch restoration in these telephones, the following steps are taken:

(a) Remove telephone faceplate and housing.

(b) Turn the screw in the latch arm approximately five turns counterclockwise.

(c) Reinstall telephone faceplate and housing.

10. CONNECTING 174B CALL ANNOUNCER

10.01 A 174B call announcer is used to provide tone and voice signaling to, and handsfree answerback from, an intercom station. The 174B call announcer connects to 20-button telephones as follows:

(a) Connect BK (-24 VDC) lead of call announcer together with VI-BL lead of telephone to terminal 17 of terminal board.

(b) Connect YL (GND) lead of call announcer together with YL-OR lead of telephone to terminal 27 of terminal board.

(c) Connect RD (CA RST) lead of call announcer together with VI-BN lead of telephone to terminal 21 of terminal board.

(d) Connect GN (CA RT) lead of call announcer together with VI-GN lead of telephone to terminal 13 of terminal board. (The VI-GN lead must be moved from RR on network.)

11. BUSY LAMP CONNECTIONS

11.01 Busy lamp connections may vary depending on the type of key system being used. Modifications for the 20-button desk telephones with feature codes 42 and 46 should be as follows: (Refer to Figure 4.)

(a) Remove GN-WH lead from terminal 22 and connect to terminal 16 on the telephone terminal board.

(b) Connect one 1N4004 diode between terminals 22 and 16 on the terminal board, and connect another 1N4004 diode between terminals 22 and 28 on the terminal board as shown in Figure 4.

(c) Connect OR-YL mounting cord lead to terminal 28 of terminal board.

11.02 Modifications for the 20-button desk telephones with feature code 76 should be as follows: (Refer to Figure 5.)

(a) Connect one 1N4004 diode from terminal 22 to terminal 28 on telephone terminal board as shown in Figure 5.

(b) Connect any "LG" lamp ground lead to terminal 28 on the telephone terminal board. (Proper station cross-connections must be made to allow the use of an LG lead.)

TCI Library: www.telephonecollectors.info

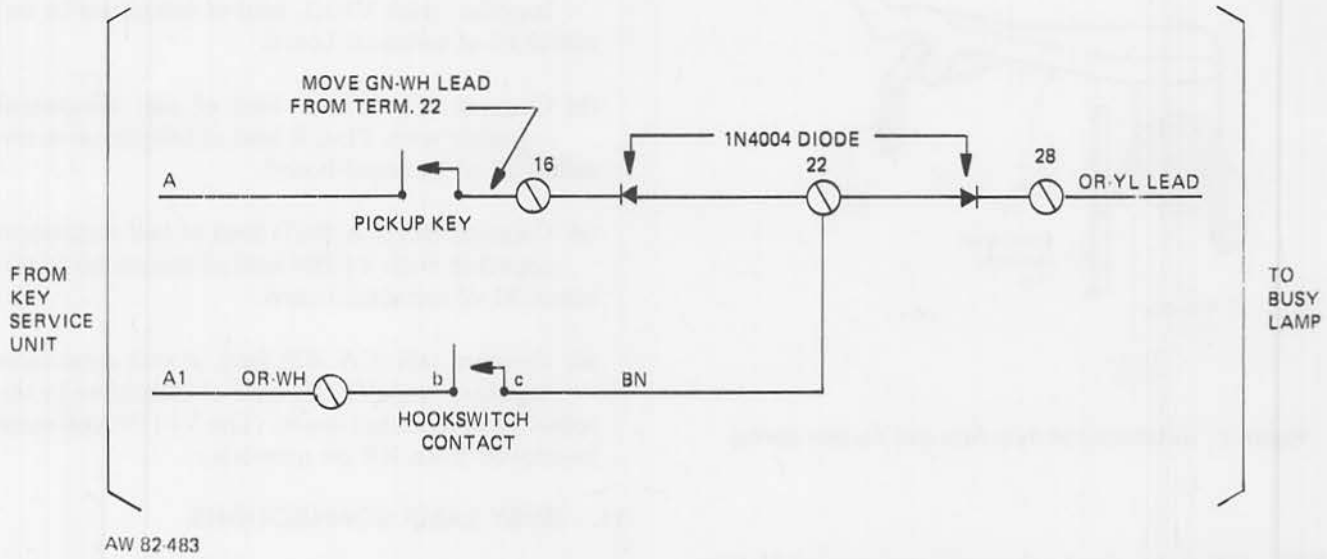

Figure 4: Busy Lamp Connections For 20-Button Telephones with Feature Codes 42 and 46

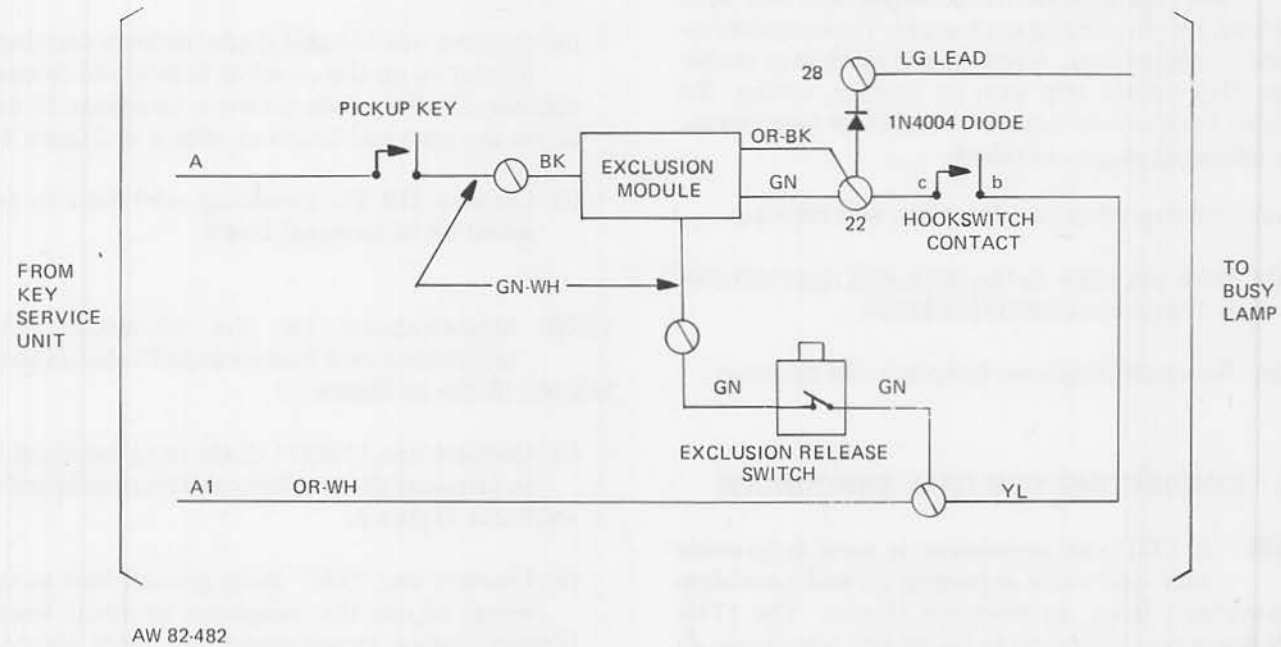

Figure 5: Busy Lamp Connections For 20-Button Telephones with Feature Code 76

TCI Library: www.telephonecollectors.info

TABLE A

REPLACEMENT PARTS LIST (Cont)

INDEX NO	PART NUMBER	DESCRIPTION	QUANTITY USED		
		20-Button, Rotary Dial, Desk Telephone	**831/42**	**831/46**	**831/76**
28	181254-102	Bracket, Dial	2	2	2
29	182337-101	Foot	4	4	4
30	082486-102	Rivet, Foot	4	4	4
31	181260-101	Cradle Switch Assembly[1]	1	1	1
32	181150-102	Left Bracket Assembly	1	1	1
	185619-101	Left Trip Bracket Assembly	1	1	1
	181252-101	Bracket, Key Left	1	1	1
	185618-101	Bracket, Trip	1	1	1
33	181298-102	Terminal Board	1	1	1
34	182386-101	PC Board (Exclusion)	–	–	1
35	000148-DBA	Ringer[1]	1	1	1
36	183105-102	Switch Hook Assembly	1	1	1
	182900-101	Cradle Switch Hook	1	1	1
	181145-101	Screw, Switch Hook Cradle	3	3	3
	185494-101	Operating Arm Assembly	1	1	1
	185487-101	Arm, Operating	1	1	1
	075307-104	Spring, Cradle Return	1	1	1
	181282-101	Shaft, Pivot	1	1	1
	073538-110	Ring, Retainer	1	1	1
37	185488-101	Arm, Latch	1	1	1
38	181151-101	Spring, Latch Arm	1	1	1
39	073538-110	Ring, Retainer	2	2	2
40	181152-101	Pin, Pivot	1	1	1
41	185486-101	Arm, Trip	1	1	1
42	185485-101	Spring, Torsion	1	1	1
43	075415-101	Card, Number	1	1	1
44	003800-00H	Dial Assembly, Metropolitan (Letters And Numerals)[1]	1	1	1
45	181146-101	Bracket, Dial Adapter	2	2	2
46	0065**-0C2	Handset Assembly, Nonmodular[1]	1	1	1
46	0065**-0M2	Handset Assembly, Modular[1]	1	1	1

TCI Library: www.telephonecollectors.info

20-BUTTON, ROTARY DIAL, DESK TELEPHONES

REPLACEMENT PARTS

1. GENERAL

1.01 This document covers the 20-button, rotary dial, desk telephone. (See Figure 1.) An exploded-view drawing of the telephone with major assembly groups (see Figure 2) and a replacement parts list (see Table A) are included.

1.02 This section is reissued to reflect changes in the 20-button, rotary dial, desk telephone and to incorporate the changes listed in the Telephone Apparatus Practices Change Notice, Section 11-510-100. Whenever this section is reissued, reason for reissue will be listed in this paragraph.

1.03 For additional information on description and installation of the telephones, refer to Section 50-831-100. The circuit labels appear in Section 50-831-102. Related documents of the ITT Telephone Apparatus Practices Manual provide information on components.

1.04 The Model 831 desk telephones are 20-button, rotary dial, anti-sidetone type units that operate efficiently over a wide range of loop resistances and line impedances. These telephones are designed for use with key telephone systems, such as the ITT 1A2 System, where several telephones have access to the same lines, CO trunks, or intercom lines.

1.05 The Model 831 desk telephones are identified by a code number stamped in ink on the bottom of the base plate. Refer to Section 50-831-100 of the ITT Telephone Apparatus Practices Manual for ordering information and for an explanation of each code number.

AW 82-366

Figure 1: 20-Button, Rotary Dial, Desk Telephone

TCI Library: www.telephonecollectors.info

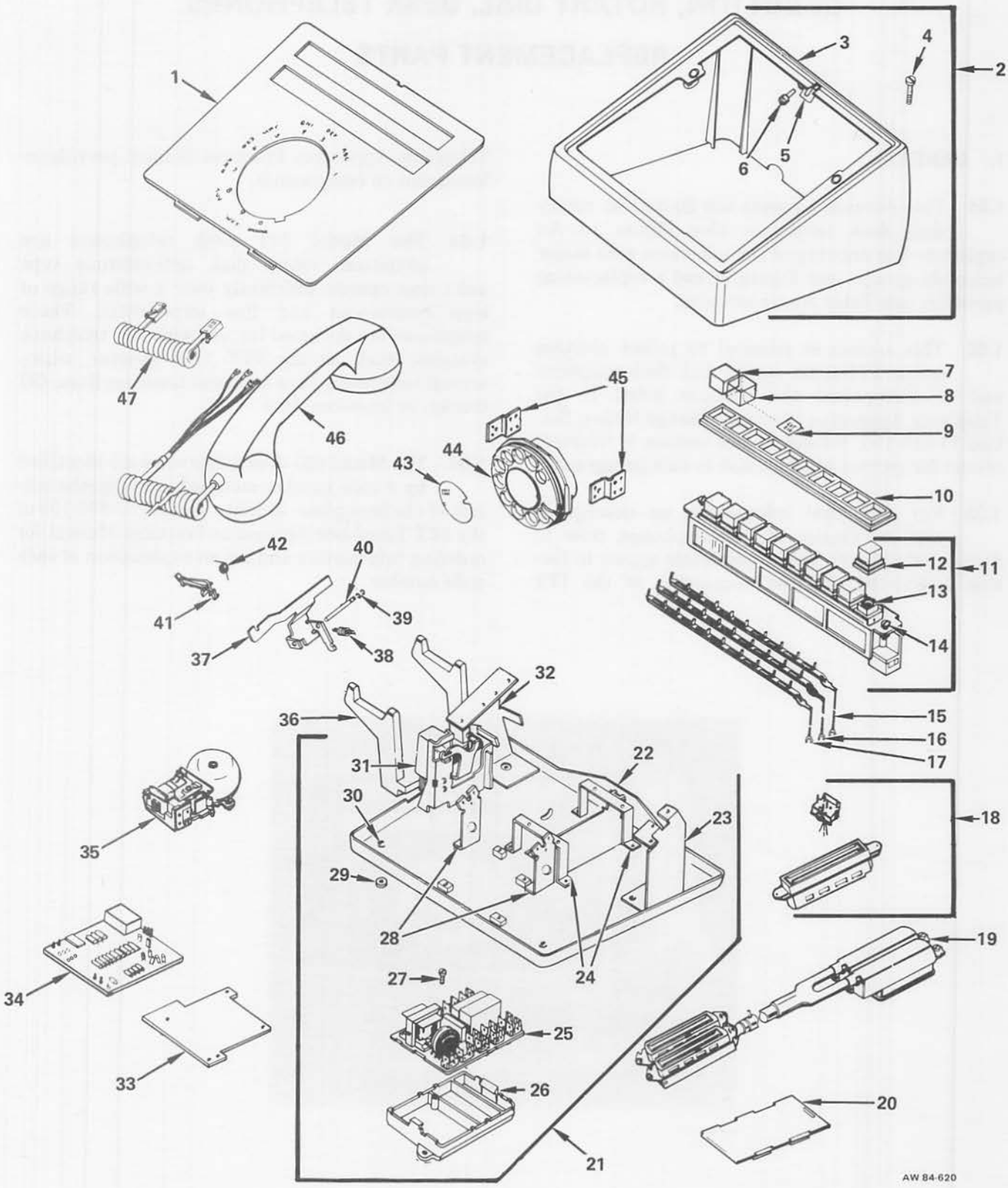

Figure 2: 20-Button, Rotary Dial, Desk Telephone, Exploded View

TCI Library: www.telephonecollectors.info

TABLE A

REPLACEMENT PARTS LIST

INDEX NO	PART NUMBER	DESCRIPTION	QUANTITY USED		
		20-Button, Rotary Dial, Desk Telephone	831/42	831/46	831/76
1	181143-***	Faceplate	1	–	–
1	181688-***	Faceplate	–	1	1
2	181102-0**	Housing Assembly	1	1	1
2	187906-0**	Housing Assembly, Full-Modular	1	1	1
3	181104-0**	Housing	1	1	1
3	187922-0**	Housing, Full-Modular	1	1	1
4	095992-102	Screw, Housing	2	2	2
5	181100-101	Spring, Latch	1	1	1
6	181289-101	Screw, Latch Spring	1	1	1
7	181131-102	Cap, Red	1	1	1
8	181131-101	Cap, Clear	19	19	19
9	181281-101	Tab, Designation (Strip Of 12)	2	2	2
10	181287-101	Collar, Key Strip	2	2	2
11	181137-101	Key Assembly (9 Lines With Hold)	1	1	1
11	181137-102	Key Assembly (10 Lines)	1	1	–
11	182661-101	Key Assembly (10 Lines)	–	–	1
12	181122-101	Button	20	20	20
13	000051-00A	Lamp	19	19	19
14	095992-102	Screw	4	4	4
15	181292-101	Strip, Contact (GN Wire)	2	2	2
16	181292-102	Strip, Contact (RD Wire)	2	2	2
17	181292-105	Strip, Contact (SL Wire)	1	1	1
18	181154-101	Cord, Internal	1	1	1
18	181155-101	Cord, Internal	1	1	–
18	182662-101	Cord, Internal	–	–	1
19	184355-102	Cord, Mounting (100-Conductor)	1	1	1
20	181290-101	Slide	1	1	1
21	181250-104	Base Assembly	1	1	1
22	181141-101	Plate, Base	1	1	1
23	181251-101	Bracket, Key Right	1	1	1
24	181255-101	Bracket, Plug	2	2	2
25	181427-101	PC Network (#183070-101)[1]	1	1	1
26	182175-101	Spacer, Network	1	1	1
27	096407-103	Screw, Network Mounting	1	1	1

TCI Library: www.telephonecollectors.info

TABLE A

REPLACEMENT PARTS LIST (Cont)

INDEX NO	PART NUMBER	DESCRIPTION	QUANTITY USED		
		20-Button, Rotary Dial, Desk Telephone	**831/42**	**831/46**	**831/76**
47	9018**-072	Cord, Handset, Modular	1	1	1
	600152-611 -001	Jack Assembly, Handset Cord, Modular (Not Shown)	1	1	1
	182990-105	Insulator Assembly, Modular (Not Shown)	1	1	1
	181973-101	Pushbutton, Operator Recall (Not Shown)	–	1	–
	181971-101	Pushbutton, Exclusion Release (Not Shown)	–	–	1
	187944-101	Nameplate, ITT (Not Shown)	1	1	1

AW 84-789

NOTES:

1 Refer to Component Parts Section of this manual for Assembly Parts List.
** Substitute 2-digit color code when ordering.
*** Substitute 3-digit color code when ordering faceplate.

CODE	COLOR	CODE	COLOR	CODE	COLOR	CODE	COLOR
101	Charcoal	104	Light Gray	107	Cocoa Brown	110	Clear
102	Light Green	105	Burnt Orange	108	Harvest Gold	111	Woodgrain
103	Muted Beige	106	Light Ash	109	Cherry Red		

TCI Library: www.telephonecollectors.info

20-BUTTON, ROTARY DIAL, DESK TELEPHONES

CIRCUIT LABELS

1. GENERAL

1.01 This document covers the 20-button, rotary dial, desk telephones. (See Figure 1.) Circuit labels for 20-button, rotary dial, desk telephones are included. (See Table A.)

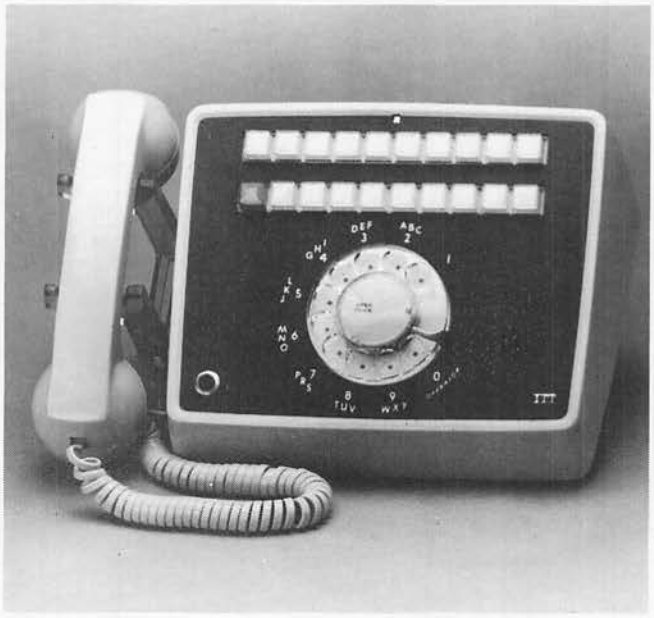

AW 86-347

Figure 1: 20-Button, Rotary Dial, Desk Telephone

1.02 This section is reissued to reflect changes in the 20-button, rotary dial, desk telephones.

1.03 For additional information on description and installation of the telephones, refer to Section 50-831-100. A replacement parts list and an exploded-view drawing for the telephones are contained in Section 50-831-101. Related documents of the ITT Telephone Apparatus Practices Manual provide information on components.

1.04 The Model 831 desk telephones are identified by a code number stamped in ink on the bottom of the base plate. Refer to Section 50-831-100 of the ITT Telephone Apparatus Practices Manual for ordering information and for an explanation of each code number.

1.05 The Model 831 desk telephones are 20-button, rotary dial, anti-sidetone type units that operate efficiently over a wide range of loop resistances and line impedances. These telephones are designed for use with key telephone systems, such as the ITT 1A2 System, where several telephones have access to the same lines, CO trunks, or intercom lines.

TABLE A

LIST OF CIRCUIT LABELS

MODEL NO	TYPE NO	FIGURE NO
831	42, 46	2
831	76	3

AW 86-424

TCI Library: www.telephonecollectors.info

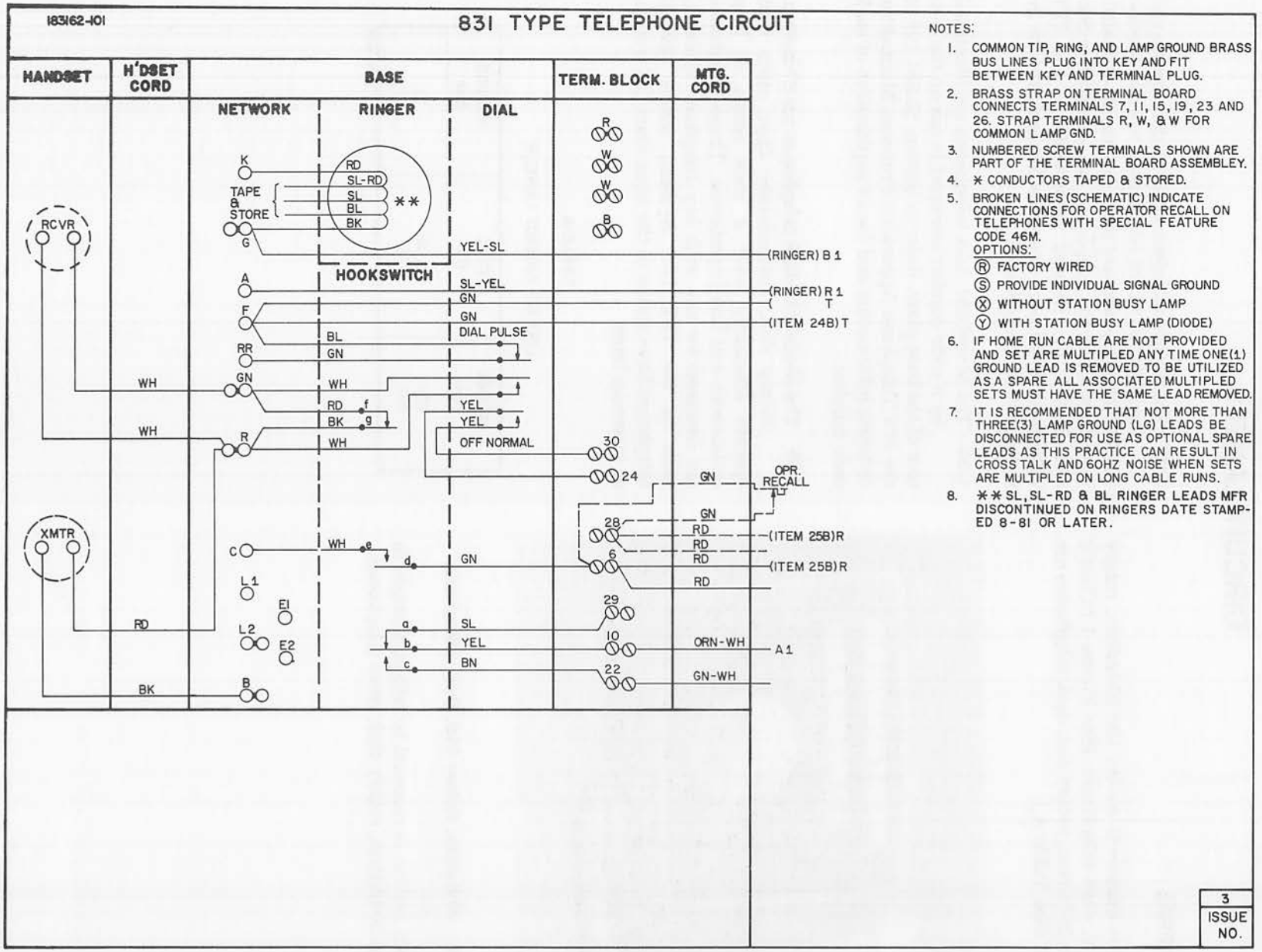

Figure 2: Circuit Label, Model 831 Types 42, 46 (Sheet 1 of 2)

TCI Library: www.telephonecollectors.info

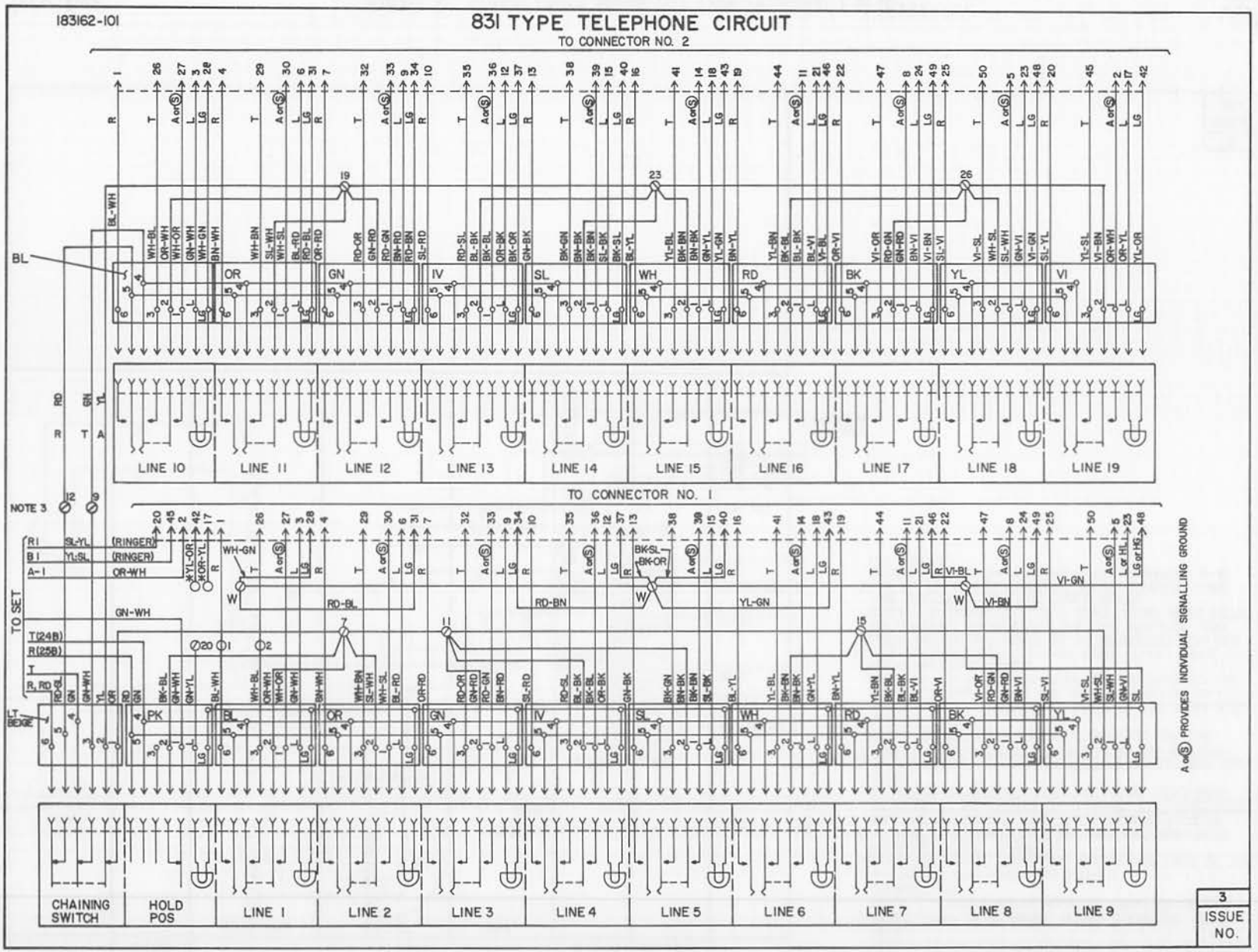

Figure 2: Circuit Label, Model 831 Types 42, 46 (Sheet 2 of 2)

TCI Library: www.telephonecollectors.info

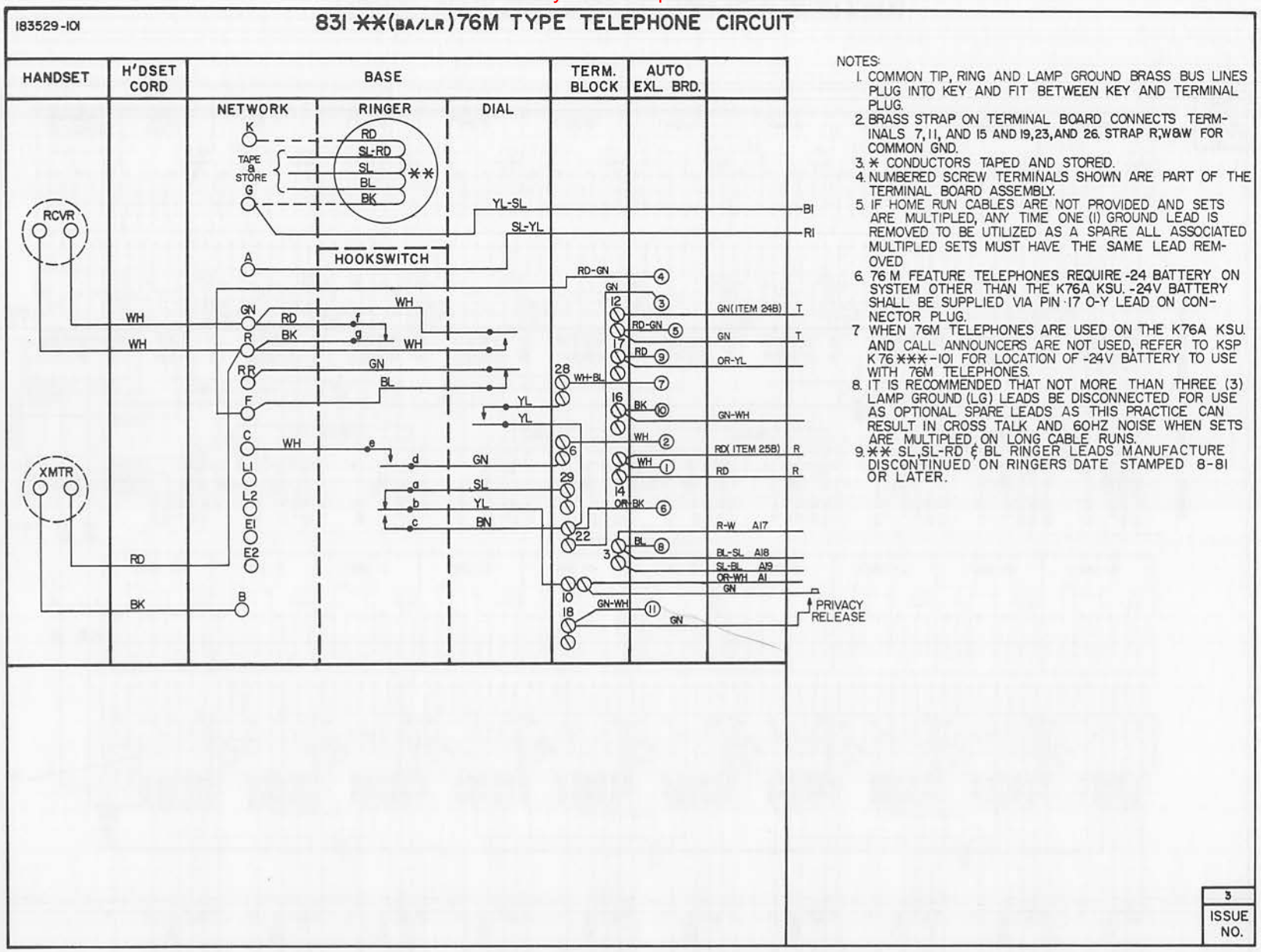

Figure 3: Circuit Label, Model 831 Type 76 (Sheet 1 of 2)

TCI Library: www.telephonecollectors.info

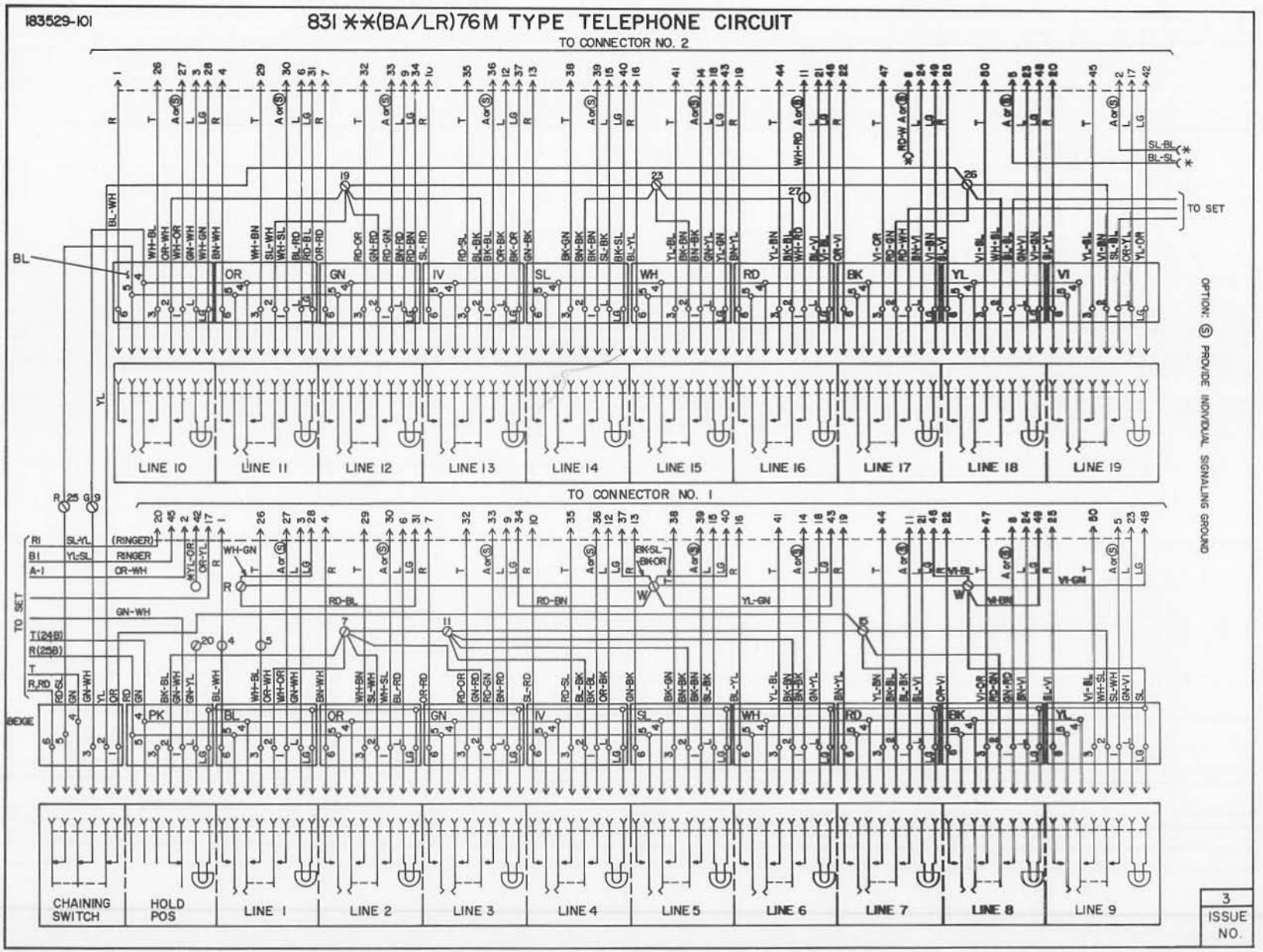

Figure 3: Circuit Label, Model 831 Type 76 (Sheet 2 of 2)

TCI Library: www.telephonecollectors.info

20-BUTTON, PUSHBUTTON DIAL, DESK TELEPHONES
GENERAL DESCRIPTION

CONTENTS PAGE

1. GENERAL DESCRIPTION 1
MODEL 2831** ( ) 42 2
MODEL 2831** ( ) 46 3
MODEL 2831** ( ) 76 3
2. INSTALLATION 3
3. MAINTENANCE 3
4. SPEAKERPHONE 3
5. BUTTON CONVERSIONS 3
6. BUZZER INSTALLATION 3
7. DESIGNATION TABS 5
8. GROUNDING PUSHBUTTON 5
9. DISABLING HOOKSWITCH RESTORATION 5
10. CONNECTING 174B CALL ANNOUNCER 7
11. BUSY LAMP CONNECTIONS 7

1. GENERAL DESCRIPTION

1.01 This document covers the 20-button, pushbutton dial, desk telephone. (See Figure 1.) A general description plus information peculiar to 20-button, pushbutton dial, desk telephones is included.

1.02 Whenever this section is reissued, reason for reissue will be listed in this paragraph.

1.03 For additional information, refer to Section 50-831-104, Replacement Parts, and to Section 50-831-105, Circuit Labels. For information on installation, maintenance, and components or equipment, consult related documents of the ITT Telephone Apparatus Practices Manual.

AW 82-368

Figure 1: 20-Button, Pushbutton Dial, Desk Telephone

1.04 The Model 2831 desk telephones are 20-button, pushbutton dial, antisidetone type units that operate efficiently over a wide range of loop resistances and line impedances. These telephones are designed for use with key telephone systems, such as the ITT 1A2 System, where several telephones have access to the same lines, CO trunks, or intercom lines. All models are equipped with a mounting cord terminated in two Amphenol-type connectors.

1.05 The Model 2831 desk telephones are identified by a code number stamped in ink on the bottom of the base plate. Refer to ordering information in Table A for an explanation of each code number.

1.06 Nineteen pushbutton keys on the telephone are used for line, trunk, or intercom lines. The red key on the far left is used as a hold key and allows any selected line or trunk to be placed in a hold condition. All remaining keys may be used as line keys or may be wired as either intercom lines or signal keys.

TCI Library: www.telephonecollectors.info

TABLE A

ORDERING INFORMATION – TELEPHONES

CODE NUMBERS

TELEPHONE CODE NUMBERS ARE FORMED IN SIX STEPS AS FOLLOWS:

2831 15 O BA 42 M

(1) Type of Instrument (See Part 1)
(2) Color (See Part 2)
(3) Version (See Part 3)
(4) Ringer (See Part 4)
(5) Special Feature (See Part 5)
(6) Dial (See Part 6)

PART 1 TYPE OF INSTRUMENT

CODE	DESCRIPTION	COLOR OFFERED	VERSION OFFERED	RINGER OFFERED	FEATURE OFFERED	DIAL OFFERED
2831	20-Button, Pushbutton Dial, Desk Telephone	00, 05, 13, 15, 44, And 45 (Available On All Models)	O	BA, LR	42, 46, 76	M, R

REFER TO INDIVIDUAL UNIT DESCRIPTION FOR COMPLETE DESCRIPTION OF FEATURE COMBINATIONS

PART 2 COLORS		PART 3 VERSIONS		PART 4 RINGERS		PART 5 SPECIAL FEATURES		PART 6 DIALS	
CODE	COLORS	CODE	VERSIONS	CODE	RINGERS	CODE	SPECIAL FEATURES	CODE	DIALS
00	Black	O	Conventional	LR	Less Ringer	42	Equipped To Operate w/External Speakerphone	M	Metropolitan (Letters & Numerals)
05	Moss Green			BA	Straight Line	46	42 Combined With Operator Recall Button	R	Regular (Numerals Only)
13	Beige					76	42 Combined With Automatic Exclusion And Release Button		
15	White								
44	Light Ash								
45	Cocoa Brown								

AW 82-344

1.07 A signal lamp beneath each of the nineteen line keys indicates status of the associated line. (See Table B.)

1.08 All 20-button telephones are equipped with a hookswitch restoration feature that restores any operated line key when the hookswitch is operated.

1.09 Variations in the Model 2831 series telephones are briefly described below. Circuit label drawings for these models are contained in Section 50-831-105.

MODEL 2831** ( ) 42

1.10 The Model 2831** ( ) 42 is a standard 20-button, pushbutton dial, desk type, key telephone equipped to operate with an external speakerphone. A set of contacts in the dial assembly disconnects the handsfree speaker during dialing; also, contacts in the hookswitch assembly provide on/off control of the handsfree equipment. The Model 2831** ( ) 42 is equipped with a 100-conductor mounting cord fitted with two 50-pin (25-pair) male connectors.

TCI Library: www.telephonecollectors.info

TABLE B

LINE KEY SIGNALS

CONDITION	LAMP INDICATION
Idle	Lamp Extinguished
Busy	Lamp Lit
Hold	Lamp Winking
Call Incoming	Lamp Flashing

AW 81-96

MODEL 2831 ( ) 46**

1.11 The Model 2831** ( ) 46 is the same as the Model 2831** ( ) 42 with the addition of an operator recall button. This button, containing normally closed contacts, can be used to recall the operator if the hookswitch restoration feature is used.

MODEL 2831 ( ) 76**

1.12 The Model 2831** ( ) 76 is the same as the Model 2831** ( ) 42 with the addition of an automatic exclusion (privacy) circuit with a release button. This release button contains normally open contacts. Where this feature is used, all telephones in the key system must contain the exclusion circuit and a release button.

2. INSTALLATION

2.01 Since these telephones are equipped with a connector-terminated mounting cord, installation consists of inserting the connectors into the jacks at the station connecting block and pressing to engage. For specific wiring information, refer to the appropriate circuit label in Section 50-831-105. Cable connections for 20-button telephones with feature codes 42 and 46 are listed in Table C. Cable connections for 20-button telephones with feature code 76 that differ from those listed in Table C are listed in Table D. For general installation information and installation of repair parts, refer to the applicable section of the ITT Telephone Apparatus Practices Manual.

3. MAINTENANCE

3.01 For general maintenance information, refer to the maintenance section of the ITT Telephone Apparatus Practices Manual. For a pictorial view and parts list, refer to Section 50-831-104.

4. SPEAKERPHONE

4.01 An external speakerphone may be installed on 20-button telephones. Most speakerphones provide the following additional features:

(a) Handsfree telephone operation. (Handsfree talking and dialing.)

(b) On-hook dialing.

(c) Automatic switching from speakerphone to handset operation.

(d) Transmitter muting for private conversation.

(e) Visual indication when system is in use.

(f) Cutoff of common ringer or other signaling devices when desired.

5. BUTTON CONVERSIONS

5.01 Any line key may be converted to signaling mode by removing the slotted head pin from the plunger shank. The slotted head pin is removed by turning clockwise. (On earlier models of the 20-button telephone the pin is removed by turning counterclockwise.)

6. BUZZER INSTALLATION

6.01 A buzzer may be installed as the signaling device of a telephone receiving an intercom call. The buzzer may be either installed on the dial mounting bracket or mounted externally. For telephones with feature codes 42 and 46, buzzer leads must be connected to the OR-YL and YL-OR leads inside the telephone. The OR-YL lead is spare and can be found taped and stored inside the telephone. For telephones with feature code 76, a lamp ground lead is used instead of the OR-YL lead (provided the proper station cross connections are made). Buzzers selected for this use must operate at 18 VAC, 60 Hz. (See Figure 2.)

TCI Library: www.telephonecollectors.info

TABLE C

CABLE CONNECTIONS FOR 20-BUTTON TELEPHONES (FEATURE CODES 42 AND 46)

LINES 1 THROUGH 7				LINES 8 THROUGH 13				LINES 14 THROUGH 19			
TELEPHONE TERMINAL	LEAD COLOR	LEAD DESIG.	CONNECTOR TERMINAL	TELEPHONE TERMINAL	LEAD COLOR	LEAD DESIG.	CONNECTOR TERMINAL	TELEPHONE TERMINAL	LEAD COLOR	LEAD DESIG.	CONNECTOR TERMINAL
Line 1 (Blue Plug)	WH-BL	T	26	Line 8 (Black Plug)	VI-OR	T	47	Line 14 (Slate Plug)	BK-GN	T	38
	BL-WH	R	1		OR-VI	R	22		GN-BK	R	13
	WH-OR	A or S	27		GN-RD	A or S	8		BK-BN	A or S	39
	WH-GN	LG	28		VI-BN	LG, P3 or 1R	49		BK-SL	LG	40
	GN-WH	L	3		BN-VI	L, P4 or 1T	24		SL-BK	L	15
Line 2 (Orange Plug)	WH-BN	T	29	Line 9 (Yellow Plug)	VI-SL	T	50	Line 15 (White Plug)	YL-BL	T	41
	BN-WH	R	4		SL-VI	R	25		BL-YL	R	16
	WH-SL	A or S	30		SL-WH	A or S	5		BN-BK	A or S	14
	RD-BL	LG	31		VI-GN	LG or T1	48		YL-GN	LG	43
	BL-RD	L	6		GN-VI	L or R1	23		GN-YL	L	18
Line 3 (Green Plug)	RD-OR	T	32	10	OR-WH	A1	2	Line 16 (Red Plug)	YL-BN	T	44
	OR-RD	R	7	G	YL-SL	B1	45		BN-YL	R	19
	RD-GN	A or S	33	A	SL-YL	R1	20		BL-BK	A or S	11
	RD-BN	LG	34	15	YL-OR	BL, AG or Spare	42		VI-BL	LG	46
	BN-RD	L	9	6	OR-YL	SG, LK or Spare	17		BL-VI	L	21
Line 4 (Ivory Plug)	RD-SL	T	35	Line 10 (Blue Plug)	WH-BL	T	26	Line 17 (Black Plug)	VI-OR	T	47
	SL-RD	R	10		BL-WH	R	1		OR-VI	R	22
	BK-BL	A or S	36		WH-OR	A or S	27		GN-RD	A or S	8
	BK-OR	LG	37		WH-GN	LG	28		VI-BN	LG	49
	OR-BK	L	12		GN-WH	L	3		BN-VI	L	24
Line 5 (Slate Plug)	BK-GN	T	38	Line 11 (Orange Plug)	WH-BN	T	29	Line 18 (Yellow Plug)	VI-SL	T	50
	GN-BK	R	13		BN-WH	R	4		SL-VI	R	25
	BK-BN	A or S	39		WH-SL	A or S	30		SL-WH	A or S	5
	BK-SL	LG	40		RD-BL	LG	31		VI-GN	LG	48
	SL-BK	L	15		BL-RD	L	6		GN-VI	L	23
Line 6 (White Plug)	YL-BL	T	41	Line 12 (Green Plug)	RD-OR	T	32	Line 19 (Violet Plug)	YL-SL	T	45
	BL-YL	R	16		OR-RD	R	7		SL-YL	R	20
	BN-BK	A or S	14		RD-GN	A or S	33		OR-WH	A or S	2
	YL-GN	LG	43		RD-BN	LG	34		YL-OR	LG	42
	GN-YL	L	18		BN-RD	L	9		OR-YL	L	17
Line 7 (Red Plug)	YL-BN	T	44	Line 13 (Ivory Plug)	RD-SL	T	35				
	BN-YL	R	19		SL-RD	R	10				
	BL-BK	A or S	11		BK-BL	A or S	36				
	VI-BL	LG	46		BK-OR	LG	37				
	BL-VI	L	21		OR-BK	L	12				

NOTES:

1. All lamp ground leads are common.
2. Lead designations P3, P4, LK T1, R1, AG and A1 are for speakerphone connections.
3. The YL-OR and OR-YL leads are spare leads and are taped and stored inside the telephone.
4. The designation S indicates that the lead provides an individual signal ground.

AW 82-333

TCI Library: www.telephonecollectors.info

TABLE D

SPECIAL CABLE CONNECTIONS FOR

20-BUTTON TELEPHONES (FEATURE CODE 76)

TELEPHONE TERMINAL	LEAD COLOR	LEAD DESIG.	CONNECTOR TERMINAL
17	OR-YL	-24 VDC	17
Line 16 (Red Plug)	WH-RD	A or S	11
Line 17 (Black Plug)	RD-WH	A or S	8
Line 18 (Yellow Plug)	BL-SL	A or S	5
Line 19 (Violet Plug)	SL-BL	A or S	2

NOTE:

1. This table lists those connections that differ from the connections for feature codes 42 and 46 telephones shown in Table C.

AW 82-493

6.02 A buzzer may also be used in place of the ringer. A 105 VAC buzzer must be provided. The ringer leads are removed and replaced by the buzzer leads.

7. DESIGNATION TABS

7.01 Designation tabs are included with each telephone. These tabs are installed by removing the cap from each key, placing the tab in the cap, and reinstalling the cap. The caps are removed by squeezing the sides and lifting. Note that locking surfaces are located on each of the caps and keys. These locking surfaces must properly align when reinstalling.

8. GROUNDING PUSHBUTTON

8.01 Modifications are made to line 9 of the telephone if a grounding pushbutton is required. A grounding pushbutton is required in some PABX applications for transferring calls, originating calls during a power failure, or other special functions. To convert line 9 to a grounding pushbutton, the following modifications should be made:

(a) Modify button to non-locking operation by removing interlock pin from line 9 plunger.

(b) Ground is provided on the WH-SL (A1) lead by the key system. (No cross-connect is necessary for this lead.)

(c) Cross-connect from the SL-WH lead to the PABX connection for the desired function.

9. DISABLING HOOKSWITCH RESTORATION

9.01 The hookswitch restoration feature used in multibutton telephones allows a station user to preselect a line key and then remove the handset to initiate a call. When the handset is returned to the cradle or the hookswitch is operated (hookswitch flash), the line key will be restored. To disable the hookswitch restoration feature, the following steps are taken:

(a) Remove telephone faceplate.

(b) Remove plastic trip arm by pulling up at the point directly above its mounting shaft.

(c) Remove torsion spring by sliding it off the mounting shaft.

(d) Reinstall telephone faceplate.

9.02 To enable the hookswitch restoration feature, the following steps are taken: (See Figure 3.)

(a) Remove telephone faceplate.

(b) Install torsion spring by sliding it onto the mounting shaft and hooking one end between the mounting shaft and the hookswitch operating arm.

(c) Install plastic trip arm by placing the notch in the trip arm on the end of the torsion spring (opposite the end hooked behind the operating arm) and pressing the trip arm onto the mounting shaft.

(d) When the hookswitch is operated, the plastic trip arm should engage with the latch arm.

(e) Reinstall telephone faceplate.

TCI Library: www.telephonecollectors.info

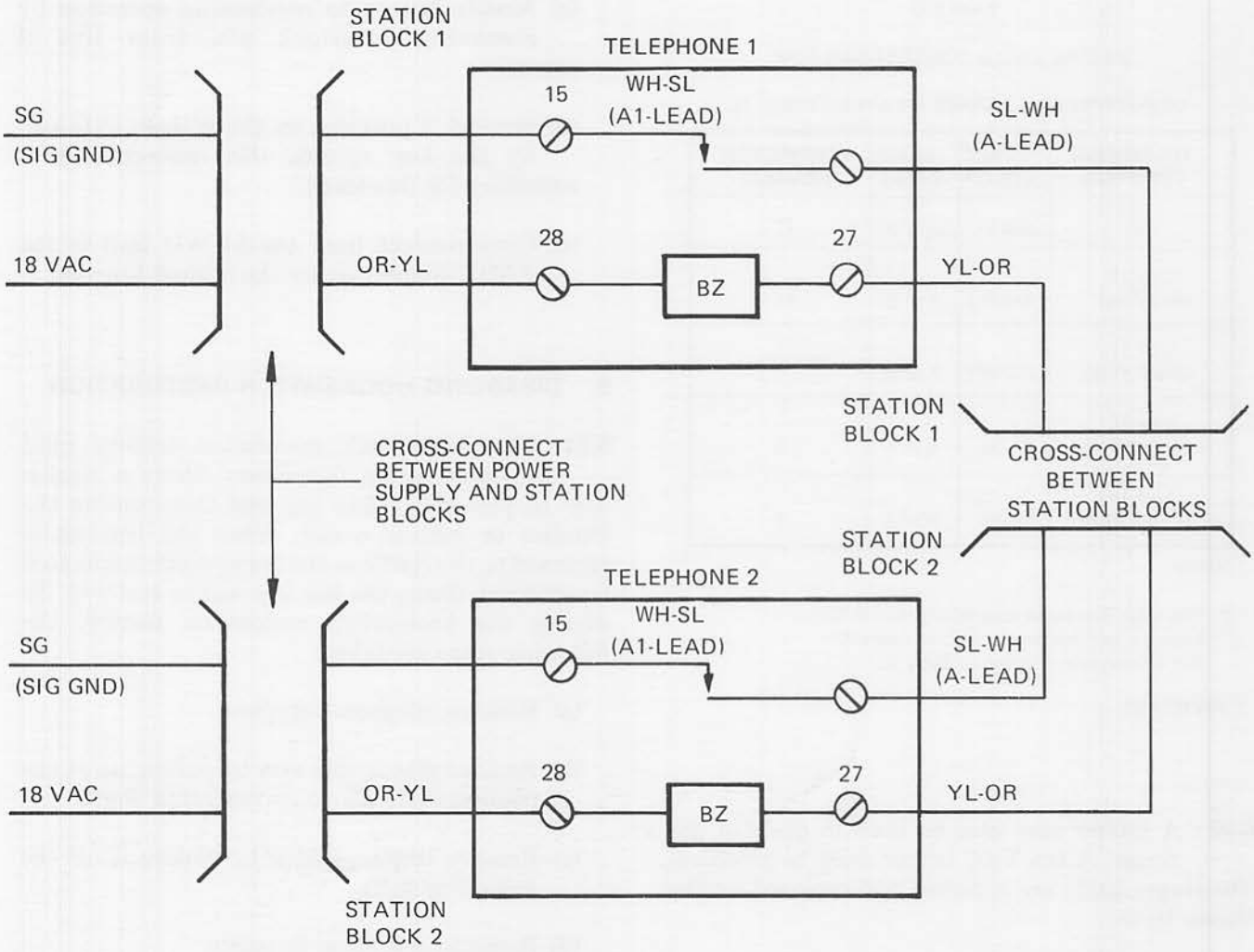

NOTES:

1. THE ARRANGEMENT SHOWN IS USING LINE 9 OF A TELEPHONE WITH FEATURE CODES 42 AND 46 AS AN EXAMPLE. IF ANOTHER LINE IS USED, SUBSTITUTE THE APPROPRIATE A1 AND A-LEADS FOR THAT LINE.

2. IN THE 20-BUTTON TELEPHONE, GROUND IS CONNECTED TO TERMINAL 15 (WH-SL LEAD). NO CROSS-CONNECT IS NECESSARY FOR THIS LEAD.

3. FOR TELEPHONES WITH FEATURE CODE 76, A LAMP GROUND LEAD IS USED INSTEAD OF THE OR-YL LEAD (PROVIDED THE PROPER STATION CROSS-CONNECTIONS ARE MADE).

AW 82-481

Figure 2: Circuit Diagram For Signal Buzzer

TCI Library: www.telephonecollectors.info

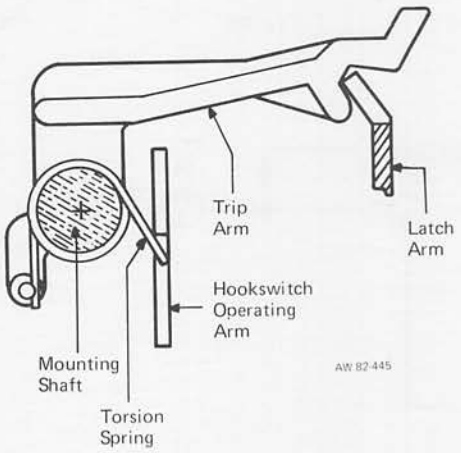

Figure 3: Installation of Trip Arm and Torsion Spring

9.03 Whenever the hookswitch restoration feature is disabled, it may become necessary to shorten or lengthen the spring connected to the operating arm to insure proper hookswitch operation. Proper operation requires the cradle to be fully depressed by the weight of the handset and return to the full up position when the handset is off-hook.

9.04 Earlier models of multibutton telephones may not provide the preselect function with the hookswitch restoration feature. These models include an adjustment screw on the latch arm rather than the plastic trip arm or torsion spring. To disable hookswitch restoration in these telephones, the following steps are taken:

(a) Remove telephone faceplate and housing.

(b) Turn the screw in the latch arm approximately five turns counterclockwise.

(c) Reinstall telephone faceplate and housing.

10. CONNECTING 174B CALL ANNOUNCER

10.01 A 174B call announcer is used to provide tone and voice signaling to, and handsfree answerback from, an intercom station. The 174B call announcer connects to 20-button telephones as follows:

(a) Connect BK (-24 VDC) lead of call announcer together with VI-BL lead of telephone to terminal 17 of the terminal board.

(b) Connect YL (GND) lead of call announcer together with YL-OR lead of telephone to terminal 27 of the terminal board.

(c) Connect RD (CA RST) lead of call announcer together with VI-BN lead of telephone to terminal 21 of terminal board.

(d) Connect GN (CA RT) lead of call announcer together with VI-GN lead of telephone to terminal 13 of terminal board. (The VI-GN lead must be moved from RR on network.)

11. BUSY LAMP CONNECTIONS

11.01 Busy lamp connections may vary depending on the type of key system being used. Modifications for the 20-button desk telephones with feature codes 42 and 46 should be as follows: (Refer to Figure 4.)

(a) Remove GN-WH lead from terminal 22 and connect to terminal 16 on the telephone terminal board.

(b) Connect one 1N4004 diode between terminals 22 and 16 on the terminal board, and connect another 1N4004 diode between terminals 22 and 28 on the terminal board as shown in Figure 4.

(c) Connect OR-YL mounting cord lead to terminal 28 of terminal board.

11.02 Modifications for the 20-button desk telephones with feature code 76 should be as follows: (Refer to Figure 5.)

(a) Connect one 1N4004 diode from terminal 22 to terminal 28 on telephone terminal board as shown in Figure 5.

(b) Connect any "LG" lamp ground lead to terminal 28 on the telephone terminal board. (Proper station cross-connections must be made to allow the use of an LG lead.)

TCI Library: www.telephonecollectors.info

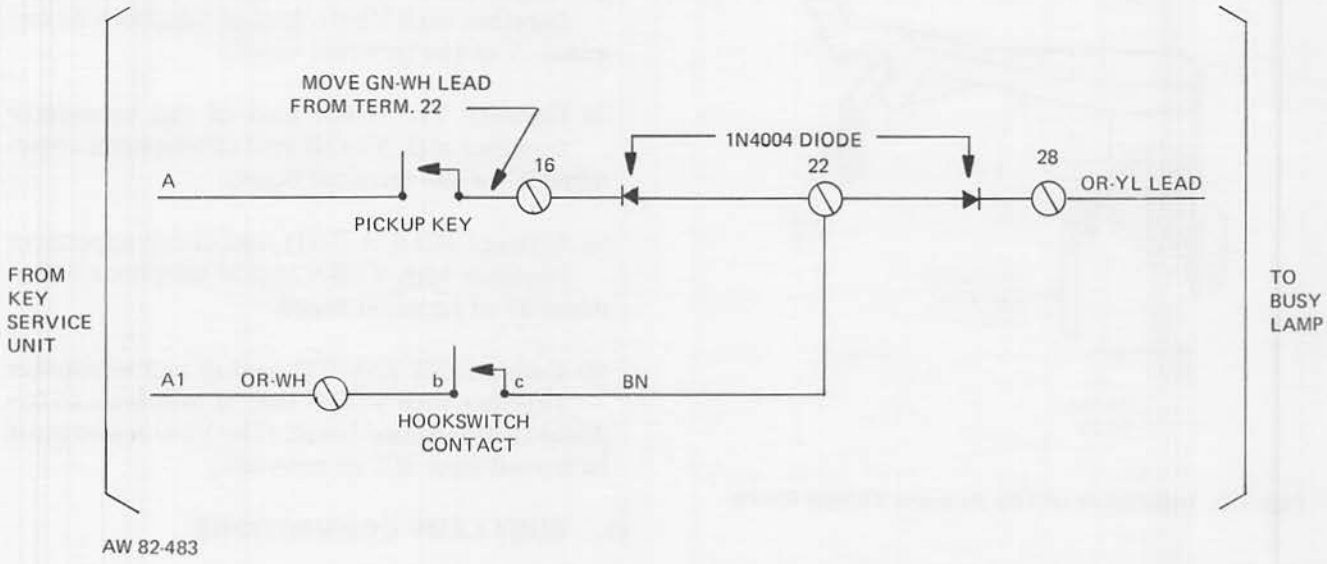

Figure 4: Busy Lamp Connections For 20-Button Telephones with Feature Codes 42 and 46

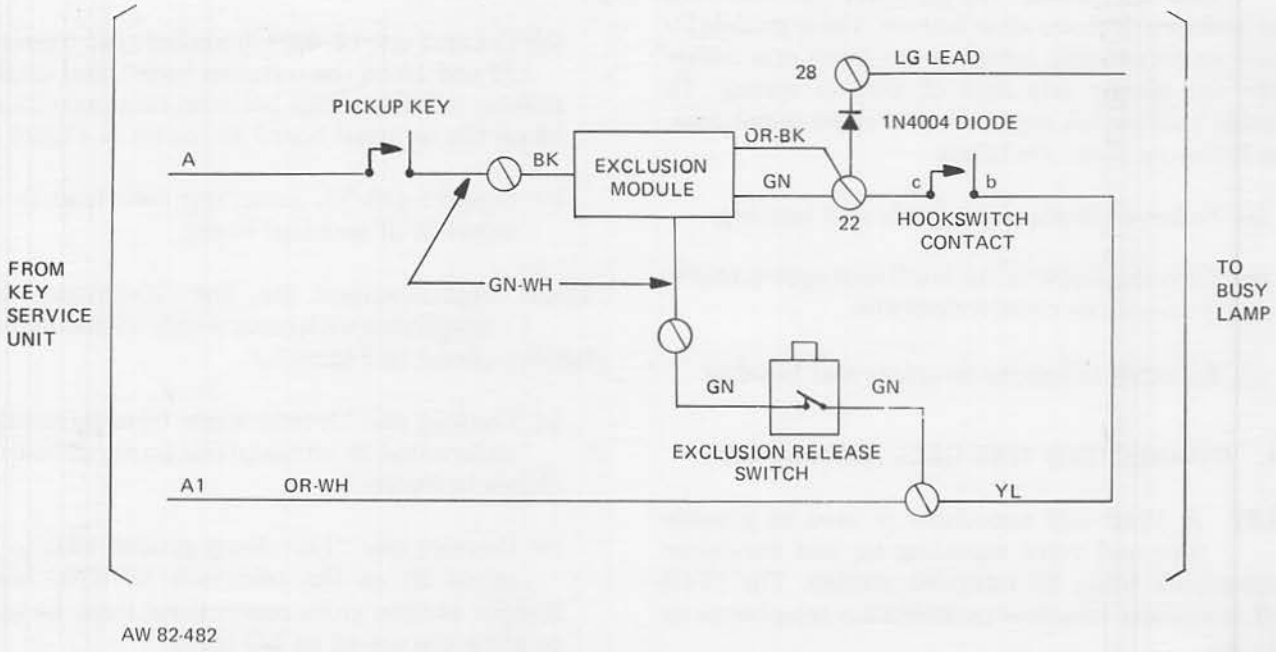

Figure 5: Busy Lamp Connections For 20-Button Telephones with Feature Code 76