(T) 197K SWITCH (J) 197HS SWITCH
(V) 197H SWITCH
842C PLUS 0-160003 OR 346E JACK

CIRCUIT NOTES:

101.

DESIG.	AMP.	POTENTIAL FUSED	ONE PER
	1½	48V TALK.	CKT. WHEN MOUNTED ON W.E. CO. SHELVES R

R WHEN MOUNTED ON A.E. CO. SHELVES, USE EXISTING FUSE FACILITIES.

102.

FEATURE OR OPTION		PROVIDE FIGS.	PROVIDE APP. OR WIR.	PROVIDE QUANTITY
CONNECTOR		1		1 PER CKT.
AUTOMATIC DISCONNECT OF CONNECTOR ON CALLING PARTY HOLDS	REQUIRED		ZC	
	NOT REQUIRED		ZB	
WHEN MOUNTED ON W.E. CO. SHELVES			S	
TYPE OF RINGING SUPPLY	SUB-CYCLE OR ROTARY		P	
	VIBRATING		N	
	GEN. & 3RD.		Q	
	GEN. & BAT. OR SUP.-		R,A	
	SUP+		R,B	

103. PROVIDE "D" OR "E" OPTION AND CORRECTIONS TO JACK S OR 22 TO MEET RINGING CONDITIONS AS OUTLINED IN THE FOLLOWING TABLE:

TYPE OF RINGING AND DISTRICT	CONN. TO JK S OR 22	RINGING VOLTAGE	SUPERIMPOSED VOLTAGE	SIGNAL VOL. 20CS	CODE OF (F) REL.	APP. OPT.	RATING	MAX. EXT. CKT. LOOP FOR TRIPPING ADJ. "K"	MAX. EXT. CKT. LOOP FOR TRIPPING SET "K"
AC-DC	GEN. & 3RD. OR GEN. & BAT.	75-110 AC & 48-52DC	48-52	222T	D	STD.	1050Ω	-	1400Ω
			48-52	222T	D	STD.	1150Ω	-	1500Ω
SUP. TUBE ±2% E.P.	±- OR ±+	85-90AC & 37-40 DC	48-52	222T	D	STD.	1050Ω	-	1400Ω
			48-52	222T	D	STD.	1150Ω	-	1500Ω
			60-75	222T	D	MD.	-	1800Ω	-
				222DP	E	A&M	-	1500Ω	-
SUP. INVERTED 42A AND TUBE	±- OR ±+	75-90AC & 37-40 DC	60-75	222DP	E	A&M	1040Ω	-	-
REP. 42A INV. 42A AND TUBE	±- OR ±+	75-90AC & 37-40 DC	60-75	222DP	E	A&M	900Ω	-	-

104.

RECORD OF FIGURES, WIRING, AND APPARATUS CHANGES							
CHANGED ON ISS	IF JOB RECORDS DO NOT SPECIFY	THIS OPTION WAS FURN	SEE NOTE	USE IN CIRCUIT STD	A&M	MD	
1			102	S	U		
3B	W OR X	X		W		X	
4A			105	Y		Z	
5D	K OR M	M	106	K		M	
6D	F OR S	S		F		S	
6D	JACK			346E		D46000B	
7D	T OR V	V	106, 302	T		V	
8S	J, T OR V	T OR V		J		T	
8B	H OR ZA	H		ZA		H	
9D	ZB OR ZC	ZB	102	ZB, ZC			
9D				M		K	

CIRCUIT NOTES (CONT):

105. THE DIFFERENCE IN WIRING OF THE (D) RELAY IS AS FOLLOWS:

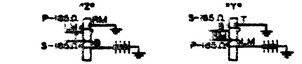

106. FOR MODIFICATIONS (A&M ONLY)

FEATURE OR OPTION	PROVIDE FIGS.	PROVIDE APP. OR WIR.	PROVIDE QUANTITY
WHEN MOUNTED ON A.E. CO. SHELVES		U	

TRANSMISSION TEST REQUIREMENTS (1000 CYCLE LOSS BETWEEN 600 Ω LINES)

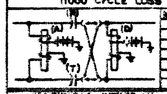

MAX. ALLOWABLE CKT. LOSS db	
	4.7

ALLOWABLE INDIVIDUAL APPARATUS LOSSES db

APPARATUS	DESIG.	CODE	MAX. LOSS	MIN. LOSS	REMARKS
CAPACITOR	T OR R	2μF	14.5	11.5	SEE NOTE
RELAY	A	221HD	0.3		
RELAY	D	222JW	0.3		

NOTE:
THE INDIVIDUAL LOSSES FOR THE (T) & (R) CAPACITORS MUST ALL BE WITHIN 0.5 db OF EACH OTHER.

OPTIONS USED	
FIGS.	APP. OR WIRING
1	Z
	U
	Y
	V
	W
	T
	S
	R
	Q
	P
	N
	M
	K
	J
	H

WORKING LIMITS

LIMITS ARE FOR SINGLE OFFICE AREAS. FOR MULTI-OFFICE AREAS, AND FOR OPERATOR PULSING, SEE KEY SHEETS.

TYPE OF DIAL OR ADJ.	48V MIN. PULSING FROM SUB. 24OR5	6	7	CALLED STA. SUPV. 40JW	40JW	48V MIN PULSING FROM SUB. 24OR5	6	7	CALLED STA. SUPV. 40JW	40JW
MAX. EXT. CKT. LOOP R	750Ω	1200Ω	1300Ω	1000Ω	1400Ω	850Ω	1500Ω	1400Ω	1115Ω	1500Ω
MAX. EXT. CKT. LOOP ##	850Ω	1400Ω	1300Ω	1000Ω	1400Ω	1000Ω	1500Ω	1500Ω	1115Ω	1500Ω
MAX. EXT. CKT. LOOP ###	1000Ω	1400Ω	1400Ω	1000Ω	1400Ω	1115Ω	1500Ω	1500Ω	1115Ω	1500Ω
MIN. INS. RES.	15000Ω			15000Ω		15000Ω			15000Ω	

WHEN USING 1000Ω LOOP-LEAK B IN PULSING TEST SET.
WHEN USING 1200Ω LOOP-LEAK A IN PULSING TEST SET.
WHEN USING 1400Ω LOOP-LEAK A IN PULSING TEST SET.

FIG. 1
CONNECTOR

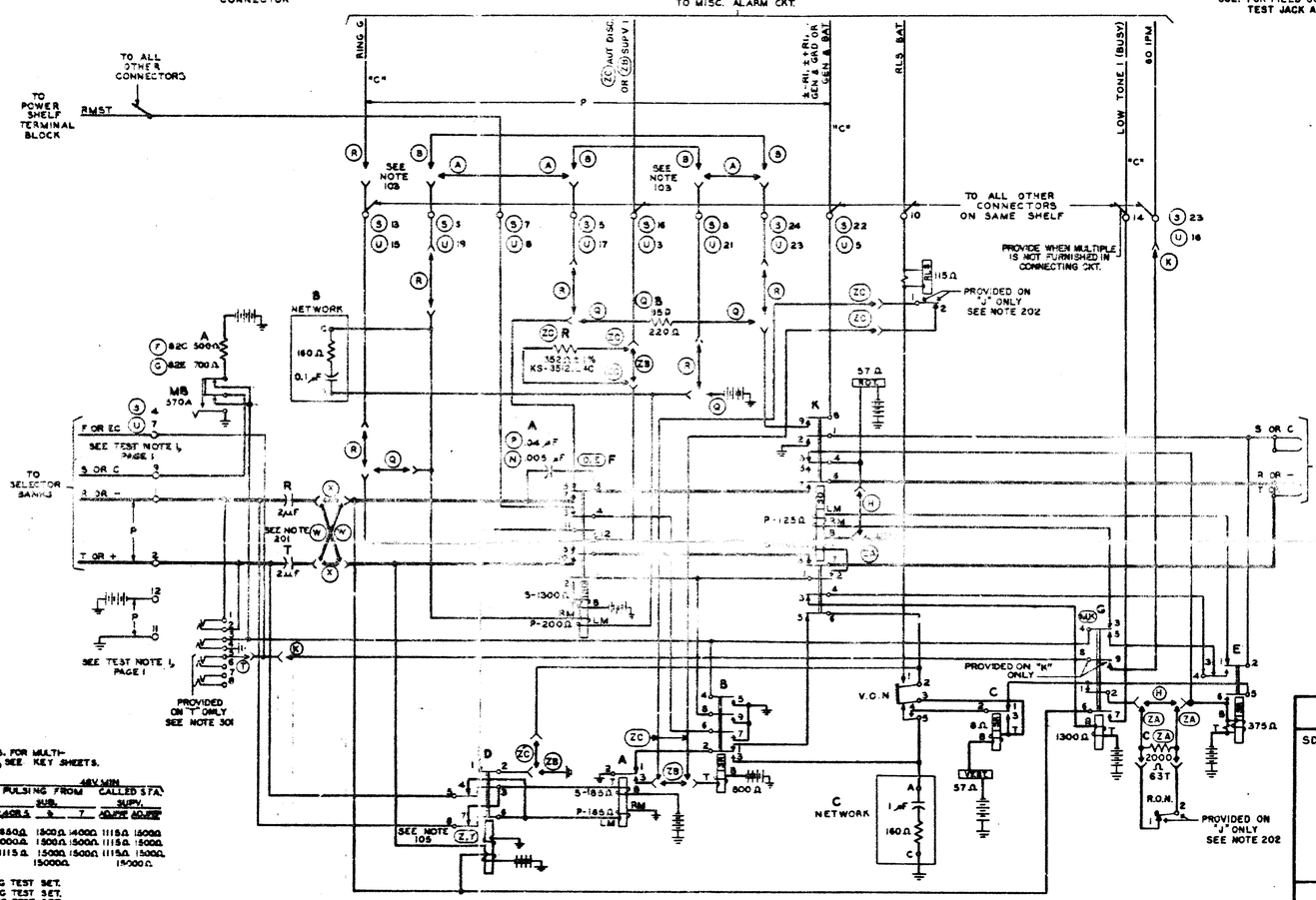

INFORMATION NOTES:

301. FOR FIELD CONVERSION FROM "Y" TO "T" OPTION, PROVIDE TEST JACK ASSEMBLY P-250374.

(MFR DISC.) SEE NOTE 302

302. FOR FIELD CONVERSION FROM "Y" TO "T" OPTION, PROVIDE TEST JACK ASSEMBLY P-252318.

THIS CIRCUIT AND THE ASSOCIATED C.D. MAY BE USED FOR MAINTAINING EQUIPMENTS PER ES-460433 EXCEPT WHEN ES-460433 IS FURNISHED WITH "K" OPTION

THIS CIRCUIT MAY BE USED FOR ADDITIONS IN PLACE OF
H-58610
H-87872

SXS NO. 35697
SD-73325-01
KEYSHEET INFO

ED-30903-01
EQUIPMENT INFO.

REV. NO.	EF. OR CH. CODE	DATE ISSUED	APPROVED
1	1	1-7-48	F.J.S.
2-AR	APP 1-AR	8-20-48	A.J.B.
3-B	APP 2-B	8-20-48	A.J.B.
4-A	APP 3-A	9-12-49	A.J.B.
5D	2D	9-22-50	A.S.B.
6D	3D APP 1D	9-4-51	W.H.H.
7D	4D APP 2D	11-19-54	R.A.T.
8B	3B	5-19-64	R.S.L. RRH MKO RJJ
9D	3B APP 1D	5-19-64	AFR GRE RRH MKO RJJ
10AR	3B APP 2B	3-6-67	AFR GRE DS MKO RRH JS

SD-30903-01

STEP BY STEP SYSTEMS
35-E-97
LOCAL CONNECTOR CIRCUIT
ONE RING
GENERATOR CONNECTED TO GROUND OR TO BATTERY

(LOC CONN 1R)

A&M ONLY

SD-30903-01-1
2 SHEETS

BELL TELEPHONE LABORATORIES, INC.

01

SD-30903-01-1