FIGS. 1K, 2K, 3K, 4K, & 5K

FOR UPPER UNITS OF NO.5 TOLL TEST BOARDS AND NO.9 TELEGRAPH TEST BOARDS

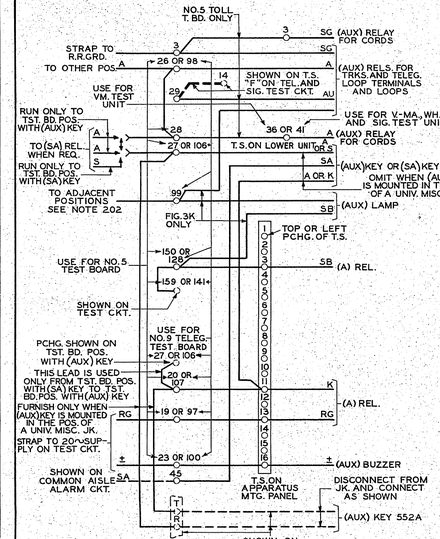

FIGS. 1L, 2L, & 3L

MODIFICATION OF UPPER UNITS OF NO.5 TOLL TEST BOARD AND NO.9 TELEGRAPH TEST BOARDS (REUSED WIRING PER SD-63080-01 SHOWN DOTTED)

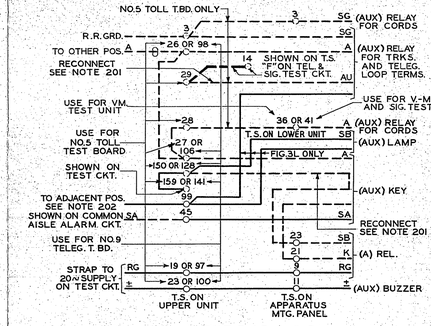

FIGS. 1Q & 2Q (PROVISIONAL)

MODIFICATION OF VOLTMETER TEST UNIT FOR USE WITH UPPER UNITS NOT EQUIPPED WITH TERMINAL STRIPS

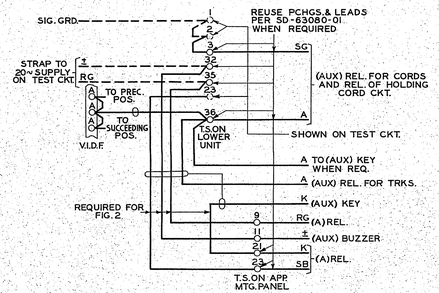

FIGS. 1M & 2M

FOR JACK FIELD EQUIPMENT OF TOLL TEST BOARD NO.16 WITH TEST UNIT

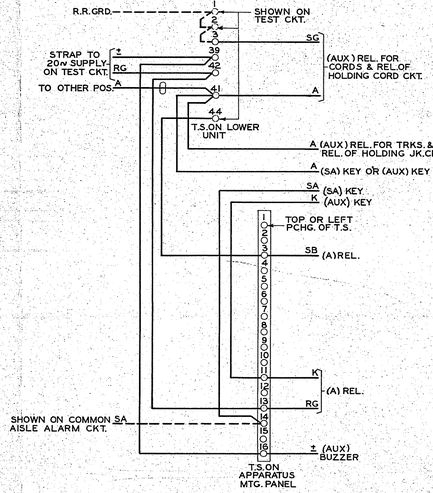

FIGS. 1N & 2N

FOR JACK FIELD EQUIPMENT OF TOLL TEST BOARD NO.16 WITH TALK AND SIGNAL SET

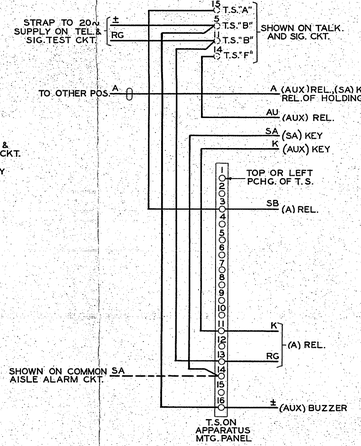

FIGS. 1P & 2P

MODIFICATION OF JACK FIELD EQUIPMENT OF TOLL TEST BOARD NO.16 WITH TEST UNIT (REUSED WIRING PER SD-63080-01 SHOWN DOTTED)

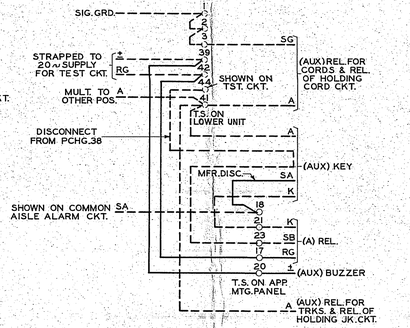

EQUIPMENT NOTES:

201. IN ORDER TO REUSE WIRING PER SD-63080-01 FOR THE LEADS INDICATED, IT IS NECESSARY TO DISCONNECT THESE LEADS FROM PUNCHINGS ON THE UPPER UNIT TERMINAL STRIPS, AND RECONNECT THEM TO OTHER PUNCHINGS ON THE SAME TERMINAL STRIPS AS COVERED IN THE FOLLOWING TABLE:

DISCONNECT LEAD FROM PCHG.	RECONNECT TO PCHG.	TERMINAL STRIP ON
31 OR 109	150 OR 128	UPPER UNIT
19	29	UPPER UNIT

202. THIS LEAD SHALL BE RUN ONLY WHEN THE TEST BOARD METHOD OF SUPERVISING ALL TELEGRAPH SERVICE IS USED AND SHALL THEN BE RUN ONLY BETWEEN THE TWO POSITIONS OF A GROUP.

203. PRIOR TO ISSUE 4-D, PUNCHINGS 17 & 20 IN FIGS. 1P & 2P WERE 9 & 11 RESPECTIVELY.

204. PRIOR TO ISSUE 5-D, FIGS. 1Q & 2Q WERE NOT SHOWN.

205. PRIOR TO ISSUE 8-D, FIGS. 1K, 2K, 3K, 4K, & 5K WERE SHOWN AS FIGS. 1K, 2K, & 3K; IN THESE FIGURES THE STRAP BETWEEN PUNCHINGS 26 & 28 WAS SHOWN BETWEEN PUNCHINGS 26 & 27, AND REFERENCE WAS NOT MADE TO THE (SA) RELAY OR (SA) KEY.

DWG. ISS. 8-D

AUXILIARY SIGNAL CIRCUIT

2 SHEETS, SHEET 2

SD-63842-012

PRINTED IN U.S.A. M2

SD-63842-012

PRINTED ON "IMPERIAL" ENGINE CLOTH K & E CO., N.Y.