459 FRD Inband Signaling System

CONTENTS PAGE

1. GENERAL 1
2. CIRCUIT DESCRIPTION 1
3. INSPECTION 4
4. MOUNTING 4
5. INSTALLER CONNECTIONS 5
6. OPTIONS 5
7. ALIGNMENT 5
8. TESTING 7
9. WARRANTY 7
10. SPECIFICATIONS 7

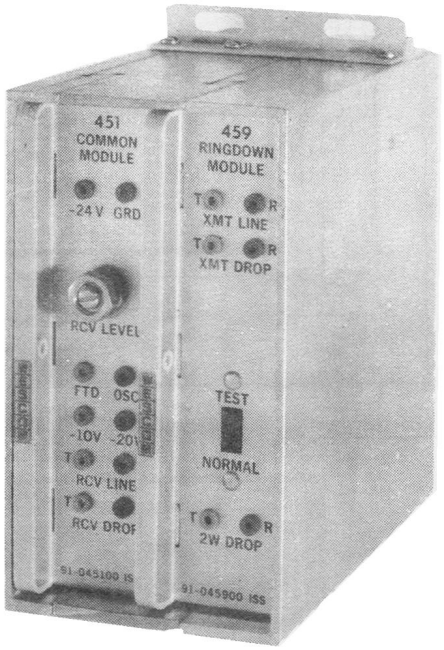

Figure 1. 459 FRD Inband Signaling System

1. GENERAL

1.01 This Practice provides circuit description, installation, and basic testing information for the Wescom 459 FRD (Automatic Ringdown) Inband Signaling System. This Practice has been reprinted to incorporate changes, primarily in the alignment procedure. Significant changes are indicated by a revision bar (▌) in the margin adjacent to the change.

1.02 The 459 FRD Inband Signaling System (Figure 1), comprised of the 451 Common and 459 FRD modules, is used to provide SF signaling over a 4-wire, voice-grade facility.

1.03 The 459 may be mounted in a Wescom Type 400 Mounting Assembly. Type 400 Mounting Assemblies are available in capacities of one to thirteen modules and allow for either KTU apparatus-case or relay-rack mounting. The two modules make electrical connection to the system by means of 56-pin wire-wrap connectors included as part of the mounting assembly.

2. CIRCUIT DESCRIPTION

2.01 Refer to Figures 2, 3, and 4 while reading the following circuit description.

2.02 The 459 is used in conjunction with the 451 Common Module to provide SF signaling over a 4-wire facility. The two modules are interconnected (as shown in Figure 2) to enable the 451 to function as the receiver and oscillator supply and to provide the control logic and transmit path. Four modes of operation are possible, depending upon the conditioning of the screw-down options. These four modes are ARD-WES, ARD-2 SEC, SWBD, and MANUAL. In the ARD-WES, ARD-2 SEC, and MANUAL modes, the 459 provides battery-feed to the 2-wire station equipment. The ARD-WES mode is unique and is only applicable for a two-point private-line circuit.

© 1974, WESCOM, INC.
Printed in U.S.A.

Scanned @300dpi Steve Cichorsky

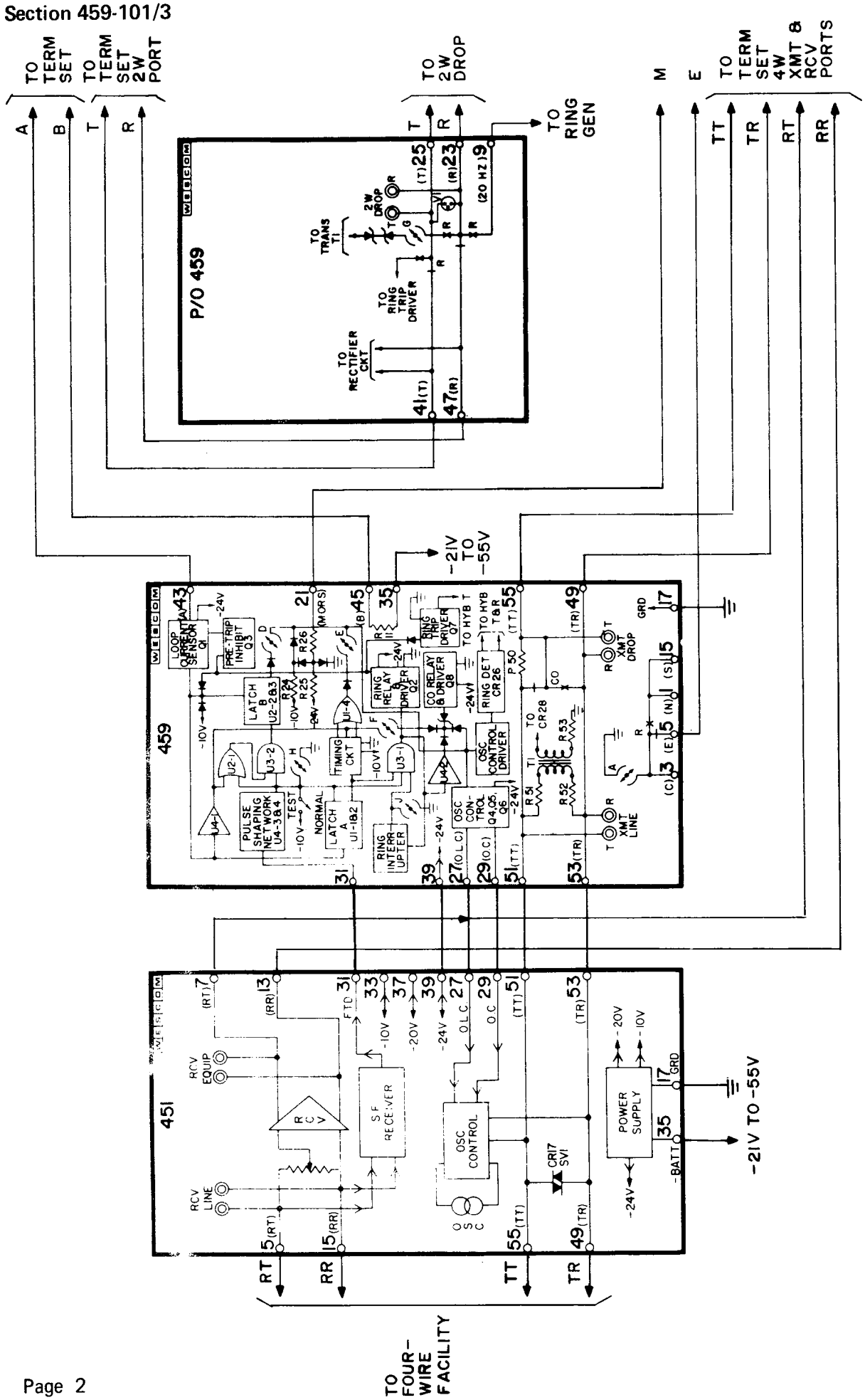

Figure 2. 459 System Functional Schematic Diagram

Scanned @300dpi Steve Cichorsky

ARD-WES Operation

2.03 When screws D and F are closed and E and H are opened, the 459 is arranged for ARD-WES operation. In this mode, loop current resulting from an off-hook condition at the local station flows through pin 43 and is detected by the loop-current sensor, consisting of Q1 and associated circuitry. Transistor Q1 turns on, placing ground at the inputs of 4U-1, latch A, and latch B. This causes the CO relay to operate, cutting and terminating the transmit link. It also causes the oscillator status control to produce a ground on pin 29, which turns on the oscillator in the 451. At the same time, the oscillator status control produces a 400-ms ground pulse on pin 27, causing the oscillator output to be at −24dBm for the first 400ms and then drop to a steady −36dBm level.

2.04 At the distant end, the 451, upon receipt of SF tone, produces a ground which appears at pin 31 of the 459. This ground starts the ringing interrupter, operating and releasing relay R at a 2-second/4-second rate. The contacts of relay R apply ringing voltage to the 2W DROP until either: (1) tone is no longer received, indicating that the calling party has hung-up, or (2) the called party answers and loop current causes the R relay to be disabled. If the called party answers, the ring trip circuit of the 459 causes a short burst of SF tone to be sent to the distant end, stopping transmission of SF tone.

ARD-2 SEC Operation

2.05 When options E, F, and H are closed and option D is opened, the 459 is arranged for ARD-2 SEC operation. Operation of the 459 in the ARD-2 SEC mode is similar to ARD-WES, with the exception that SF tone is sent for a 2-second interval rather than continuously. This 2-second interval is established by the timing circuit associated with U1-4. The timing cycle is initiated by ground outputs from U4-1 and latch A, resulting from detection of loop current when the local station goes off-hook.

2.06 The 2-second burst of SF tone received by the 451 at the distant end causes a ground pulse at pin 31 of the associated 459, setting latch A. If option H is closed, ringing will be applied to the line until the called party answers or the calling party goes back on-hook. If option H is open, only one 2-second burst of ringing will be applied to the line. When the called party answers, loop current sensed by Q1 resets latch A, tripping the ringing.

Manual Operation

2.07 The 459 is conditioned for manual operation by closing options F and J (only). In this mode, ringing of the called party's station set is accomplished, manually, by an operator or the calling party. In either case, ground is applied to the M lead which actuates the oscillator status control. This results in SF tone being sent to the distant end and causes the CO relay to be operated in the local 459. SF tone is sent as long as the key on the local station set (or operator's position) is operated. When the distant station goes off-hook in response to ringing, ringing is inhibited. At this point, the CO relay at each end is released and conversation may commence.

SWBD Operation

2.08 When options D, E, F, and H are all open, the 459 is arranged for the SWBD mode of operation. The SWBD operation invblves the application of ringing voltage to the 2-wire side of the 459 pins 41 and 47 from a ringdown key telephone unit, PBX ringdown trunk, or trunk adapter. These trunks may be level accessed or wholly accessed under operator control. When ringing is applied, it is rectified by CR26 and the resulting dc level turns on Q9, actuating the oscillator status control and operating the CO relay. This action causes SF tone to be sent to the distant end, thereby ringing the called station. Ring trip is accomplished as described in paragraph 3.07.

Ringback Tone

2.09 Ringback tone may be provided with any mode of operation by closing option G. When ringing voltage is present at the 2W DROP, it is attenuated by Zener diodes CR27 and CR28 and developed across T1. In this manner, a small amount is sent on the transmit line to the distant (calling) terminal.

451 Common Module Circuit Operation

2.10 Speech energy or SF signaling tone energy received from the distant terminal over the 4-wire receive line enters the 451 on connector pins 5 and 15. Speech energy present on the receive line is amplified to provide 0dB through loss by the RCV amplifier and connected to the receive drop through connector pins 7 and 13.

Scanned @300dpi Steve Cichorsky

Signaling tone energy, present on the receive line, is separated from speech energy by filters and is processed by the SF receiver (which converts signaling tone energy to a ground signal from a −20V potential when signaling tone energy is not present). The ground signal, thus developed, is routed to connector pin 31 [FTD (First Threshold) lead] for connection to the 459; it is also used within the 451 to control the insertion of a band elimination filter, applied at the input of the RCV amplifier. This filter, inserted in the receive path only when SF signaling tone energy is received over the 4-wire line, provides a minimum of 45-dB attenuation to signaling tone energy with respect to speech energy at the receive drop. Signaling tone energy, therefore, does not enter equipment connected to the receive drop terminals. The full band-width of the voice channel is available, however, during non-signaling intervals to permit the use of the 451 in data transmission links.

3.11 In addition to a receive line amplifier and SF receive and process circuitry, the 451 contains an SF signaling tone oscillator. This oscillator, under the control of the 459, applies signaling tone energy to the transmit portion of the 4-wire line for transmission to the distant terminal. A ground signal (from −24V) applied to pin 29 (oscillator on-off control) by the 459 turns on the SF oscillator, which applies signaling tone energy at a level of −36dBm to the 4-wire line. An absence of ground signal, applied to connector pin 27 (oscillator level control) by the 459, decreases the level of the signaling tone energy from −24dBm to −36dBm.

2.12 The 451 contains a power supply which provides regulated supply voltages to operate the circuitry contained in both the 451 and 459, and permits the operation of both modules from battery potentials within the range of −21Vdc to −55Vdc.

3. INSPECTION

3.01 Inspect the equipment thoroughly, as soon as possible after delivery. If the equipment has been damaged in transit, report the extent of damage to the transportation company immediately. If the equipment is to be stored, make an operational check to determine that the equipment is in proper working order as received from the factory. After an indication of satisfactory performance has been obtained, the equipment may be stored for future installation. If the system is to be installed at once, make an operational check after the installation is completed.

3.02 Wescom equipment is specifically identified by the model number and final-assembly number silk screened on the front panel of the plug-in module. At the start of production, the final-assembly number is assigned an issue number of 1 which becomes an integral part of the final-assembly number. After the start of production, this issue number is advanced each time a major engineering change occurs. Therefore, be sure to use the model number and final-assembly number when making inquiries about the equipment. The issue number of the instruction manual and schematic diagram attached should be the same as the issue number assigned to the equipment.

4. MOUNTING

4.01 The 459 is designed to mount in two module positions of a Type 400 Mounting Assembly. Type 400 Mounting Assemblies are available in capacities of 1 to 13 modules and may be equipped and prewired for any combination of modules from the Wescom product line.

KTU Apparatus-Case Mounting

4.02 Type 400-1 (one-module) through 400-5 (five-module) Mounting Assemblies may be installed in a 15A (equivalent to Western Electric Co. 31B) KTU apparatus case. Type 400-1 through 400-13 Mounting Assemblies may be installed in a 16C (equivalent to WECo 16C) KTU apparatus case.

Relay-Rack Mounting

4.03 Type 400-1 through 400-9 Mounting Assemblies require the use of mounting bars, when mounted on either a 19- or 23-inch relay rack. Type 400-10 and 400-11 Mounting Assemblies are provided with mounting brackets for mounting directly across 19-inch relay racks. Type 400-12 and 400-13 Mounting Assemblies are also provided with mounting brackets for

Scanned @300dpi Steve Cichorsky

23-inch relay-rack mounting. These mounting brackets are arranged to mount on relay racks drilled to accept either 1-3/4 or 2-inch mounting plates.

4.04 Because Type 400-1 through 400-9 Mounting Assemblies must be installed on mounting bars, 7 inches of vertical space (four mounting spaces) are required for relay-rack mounting. Type 400-10 through 400-13 Mounting Assemblies, however, are provided with mounting extensions located on the sides of the mounting assemblies and require only 6 inches of vertical rack space. Install the mounting assembly in a KTU apparatus case or on a relay rack (as described in paragraphs 5.02 and 5.03) with mounting hardware provided.

Universal Shelf Mounting

4.05 When a high degree of flexibility is required to provide for new circuit arrangements as well as circuit rearrangements, the 459 may be mounted in a Wescom Universal Shelf. The universal shelf permits all intermodule wiring and installer connections to be made at the front of the mounting assembly and provides maximum accessibility to these connections when changes are required. The Type 400UA-11 and 400UB-11 Universal Shelves provide mounting positions for up to 11 modules and are designed for mounting in a 19-inch relay rack. Type 400UA-13 and 400UB-13 Universal Shelves provide mounting positions for up to 13 modules and are designed for mounting in a 23-inch relay rack.

5. INSTALLER CONNECTIONS

5.01 When the 459 is installed in a Type 400 Mounting Assembly, each module makes electrical connection to associated equipment through a 56-pin, wire-wrap card connector provided as part of the mounting assembly. Make all installer connections to these connectors in accordance with the attached Wescom Installation Guide.

5.02 Type 400UA-11 and 400UA-13 Universal Shelves provide terminal block locations above the mounting assembly, whereas Type 400UB-11 and 400UB-13 Universal Shelves provide terminal block locations below the mounting assembly. When the 459 is installed in a universal shelf, make all installer connections to these terminal blocks in accordance with the attached Wescom Installation Guide.

6. OPTIONS

6.01 The 451 has one screw-down option, option A. The 459 is provided with several screw-down options to permit the use of various features. Refer to Table 1 for conditioning of the 459 options.

Table 1. Option Chart

MODE OF OPERATION	OPTION						
	D	E	F	G	H	J	A
ARD–WES	Closed	Open	Closed	note 1	Open	note 3	note 4
ARD-2 SEC	Open	Closed	Closed	note 1	note 2	note 3	
MANUAL	Open	Open	Closed	Open	Open	Closed	
SWBD	Open	Open	Open	Open	Open	Closed	

NOTE 1: If ringback tone is desired, close option G. If not, open option G.

NOTE 2: For locked-in ringing, close option H. For 2-second burst ringing, open option H.

NOTE 3: For 2 second/4 second interrupted ringing, open option J. For continuous ringing, close option J.

NOTE 4: For external C-lead control of E lead, open strap A. If C-lead control is not required, close option A.

6.02 Option A on the 451 is opened when the 451 is used in conjunction with the 457-FSA, FX Signaling Unit. For this, and all other applications, this option is closed.

6.03 Option location and further option information is listed on the attached Wescom Installation Guide.

7. ALIGNMENT

7.01 The alignment procedure for the 459 consists of: (1) injecting tone into the transmit levels of the associated equipment, and (2)

Scanned @300dpi Steve Cichorsky

injecting test tone into the receive channel to align the receive levels of the associated equipment and the 451. Refer to the attached line-up diagram for this procedure.

Test Equipment

7.02 The test equipment required at both the local and distant terminals to properly align and test the system is as follows:

(a) Transmission Test Set (TTS): WECo 23A (or equivalent).

(b) Multimeter: Simpson 260 or equivalent.

(c) Associated Test Cords: Two, 2-conductor test cords equipped with a Type 310 plug at one end and two Type 59 cord tips at the other.

Preliminary

7.03 Before performing the subsequent alignment procedure, verify that the local and distant terminals are properly connected. Using the multimeter, verify that power (-24 ±3Vdc) is present across the -24Vdc and GRD test points of the 451 front panel. Also ensure that the proper voltages appear at the -20V and -10V test jacks. Do not attempt to use one of these test points as a test battery source, or damage to the unit may result. In addition, check the 459 for correct strapping options and installer connections. Place the TEST/NORMAL switch in the TEST position and place both local and distant terminals in the off-hook condition.

Transmit Alignment

7.04 Perform the transmit alignment as follows:

(a) At the local terminal, connect the oscillator in the TTS to the 2W IN test jack on the associated Term Set front panel. Condition the VFO for holding and for operation at 1kHz and at the impedance and level specified on the CLR card.

(b) Condition the TTS for 600-ohm terminated measurement and connect it to the 4W XMT test jack on the associated Term Set front panel. Adjust the XMT attenuator until the TTS reads -16dBm.

(c) Disconnect the TTS from the Term Set and connect it to the XMT LINE jack on the associated Line Amplifier.

(d) Adjust the XMT LEVEL control on the Line Amplifier until the TTS indicates the level specified on the CLR; remove the TTS and request the distant terminal to verify that the level is within the limits specified on the CLR.

Receive Alignment

7.05 Perform the receive alignment procedure as follows:

(a) Request the distant terminal to send 1kHz test-tone at the impedance and level specified on the CLR.

(b) At the local terminal, condition the TTS for a terminated measurement at the line impedance and connect it to the RCV LINE MON test jack on the associated Line Amplifier front panel. Place an open plug in the RCV LINE jack on the Line Amplifier front panel. Verify that the 1kHz test-tone is at the level required by the CLR. If the received level is not within ±1dB of the level required by the CLR, an overall facility check must be made.

(c) Remove the TTS from the RCV LINE MON test jack and connect it to the RCV DROP test jack. Remove the open plug from the RCV LINE jack on the Line Amplifier front panel. Adjust the RCV LEVEL control of the Line Amplifier until the TTS indicates +7±0.25dBm.

(d) Disconnect the TTS from the RCV DROP test jack. Connect the TTS to the 4W RCV test jack on the front panel of the associated Term Set.

(e) Adjust the RCV LEVEL control on the 451 Common Module until the TTS indicates +7±0.25dBm (0dB insertion loss).

(f) Disconnect the TTS from the 4W RCV test jack. Set the TTS for terminated measurement at the impedance of the

Scanned @300dpi Steve Cichorsky

2-wire drop and connect it to the 2W IN test jack on the Term Set front panel. Adjust the RCV control on the Term Set until the TTS indicates the level specified on the CLR for the 2-wire drop.

(g) This completes the receive alignment procedure. Disconnect all test equipment and restore all equipment to normal. Tighten the lock nuts on the variable controls and place the TEST/NORMAL switch in the NORMAL position. Perform ringing, ring trip, and talk tests on the channel to verify overall facility performance.

8. TESTING

8.01 If trouble is encountered with the operation of the 459, verify that all installer connections have been properly made in accordance with paragraph 5 and the attached Wescom Installation Guide, and that all options have been conditioned as required. Make certain that the module is making good connection with the mounting-assembly card connector; remove and reinsert the module. If the trouble persists, attempt to determine whether the fault is internal or external to the module. If technical assistance is required, contact the Wescom Technical Services Department by calling:
Technical Services Department by calling:
(312) 971 2010 or
TWX 910-695-4735

Canadian Customers:
(416) 453-2222 or
TWX 610-492-2697

9. WARRANTY

9.01 STANDARD WARRANTY: Wescom products are warranted to be free from defects in material workmanship, and design given proper installation and regular maintenance. Wescom's obligations under this warranty are limited to correction and replacement at Wescom's production facility of any defective items received by Wescom, transportation prepaid, for a period of 18 months from the date of original shipment. Warranty and remedies on products not manufactured by Wescom are in accordance with the warranty of the respective manufacturer. WESCOM MAKES NO OTHER WARRANTY OF ANY KIND WHATEVER, EXPRESSED OR IMPLIED; AND ALL IMPLIED WARRANTY OF FITNESS FOR A PARTICULAR PURPOSE WHICH EXCEEDS THE AFORESAID OBLIGATIONS IS HEREBY DISCLAIMED BY WESCOM.

9.02 Field repairs involving the replacement of components within a unit are not recommended. If an item is found to be defective, contact Wescom, Inc., by telephone or TWX, for instructions regarding replacement or repair.

9.03 If a replacement unit is required, it will be shipped in the fastest manner consistent with the urgency of the situation. Upon receipt of a replacement unit, return the defective unit in the carton in which the replacement was shipped, using the shipping label provided, to:
Wescom, Inc.
8245 Lemont Road
Downers Grove, Illinois 60515

Canadian Customers:
Wescom Canada, Ltd.
287 Glidden Road
Brampton, Ontario L6W1H9
Canada

Repair or Exchange Services

9.04 In addition to the standard Wescom Warranty Service, Wescom offers a repair or exchange service for those items out of warranty. Under this arrangement, faulty units may be shipped to Wescom for either complete repair and quality testing or exchanged for a replacement unit. To obtain details of this service and a schedule of prices, contact your local Wescom Sales Representative.

10. SPECIFICATIONS

10.01 Specifications describing the electrical and physical characteristics of the 459 are as follows:

Scanned @300dpi Steve Cichorsky

(a) SIGNALING FREQUENCY: 2600, 2400, 2280, or 1600±5Hz, depending on the model number of the 451 (refer to Table 2).

Table 2. 451 Signaling Frequencies

MODEL	RCV	XMT	PART NUMBER
451	2600Hz	2600Hz	91-045100
451/A	2400Hz	2600Hz	91-045101
451/B	2600Hz	2400Hz	91-045102
451/C	1600Hz	1600Hz	91-045103
451/D	2400Hz	2400Hz	91-045104
451/E	2280Hz	2280Hz	91-045105

(b) TOTAL HARMONIC DISTORTION: Less than 4%.

(c) TEST-TONE LEVELS: Transmit, 16dBm; Receive, +7dBm.

(d) TRANSMIT TONE LEVELS: High Level, −24±2dBm (−8dBm0); Low Level, −36±2dBm (−20dBm0).

(e) FREQUENCY RESPONSE: 250 to 3400Hz, ±1dB, (relative to 1000Hz).

(f) RECEIVE SENSITIVITY: −22dBm, minimum.

(g) RECEIVE AMPLIFIER ADJUSTMENT: −10dB to +2dB.

(h) SF TONE REJECTION: 55dB, typical; 45dB, minimum.

(i) MAXIMUM LINE NOISE: 52dBrnCO.

(j) INPUT/OUTPUT IMPEDANCE: Four-wire transmit, 600 ohms ±5%; 4-wire receive, 600 ohms ±5%.

(k) SUPERVISORY RANGE (ARD-WES, ARD-2 SEC, MANUAL modes): 1000 ohms (maximum), 24V operation; 2000 ohms (maximum), 48V operation.

(l) SUPERVISORY RANGE (SWBD modes): 50Vac (minimum), 16 to 67Hz (negative-biased ring generator).

(m) HIGH-LEVEL HOLD TIME: 400ms nominal.

(n) INPUT VOLTAGE: −21Vdc to −55Vdc.

(o) MAXIMUM CURRENT DRAIN (451+459): Less than 200mA (including loop current).

(p) OPERATING ENVIRONMENT: Temperature, 32° to 120°F; Humidity to 95% (no condensation).

(q) WEIGHT: 0.5 lb. (approximately).

(r) DIMENSIONS: Height, 5-19/32 inches; Width, 1-1/2 inches; Depth, 6 inches.

(s) MOUNTING: Module occupies one position in a Type 400 Mounting Assembly which provides for either KTU apparatus-case or relay-rack mounting. Refer to Part 4 for mounting information.

Scanned @300dpi Steve Cichorsky

WESCOM Installation Guide

56-Pin Connector	Lead Designation
56 / 55	XMT DROP T
54 / 53	XMT LINE T
52 / 51	XMT LINE R
50 / 49	XMT DROP R
48 / 47	2W HYB R
46 / 45	2W HYB B
44 / 43	2W HYB A
42 / 41	2W HYB T
40 / 39	−24V
38 / 37	
36 / 35	−BATT
34 / 33	
32 / 31	FTD
30 / 29	OSC ON-OFF
28 / 27	OSC LEVEL
26 / 25	2W DROP T
24 / 23	2W DROP R
22 / 21	M or S TO SIG KEY
20 / 19	
18 / 17	GRD
16 / 15	MACH. ST.
14 / 13	
12 / 11	
10 / 9	GEN
8 / 7	
6 / 5	E
4 / 3	C
2 / 1	N

Installer Connections (459).

56-Pin Connector	Lead Designation
56 / 55	XMT LINE T
54 / 53	XMT DROP T
52 / 51	XMT DROP R
50 / 49	XMT LINE R
48 / 47	
46 / 45	
44 / 43	
42 / 41	
40 / 39	−24V
38 / 37	−20V
36 / 35	−21 to −55Vdc IN
34 / 33	−10V
32 / 31	FIRST THRESHOLD DETECTOR
30 / 29	OSC ON-OFF CONT
28 / 27	OSC LEVEL CONT
26 / 25	
24 / 23	
22 / 21	
20 / 19	
18 / 17	GRD
16 / 15	RCV LINE R
14 / 13	RCV DROP R
12 / 11	
10 / 9	
8 / 7	RCV DROP T
6 / 5	RCV LINE T
4 / 3	
2 / 1	

Installer Connections (451)

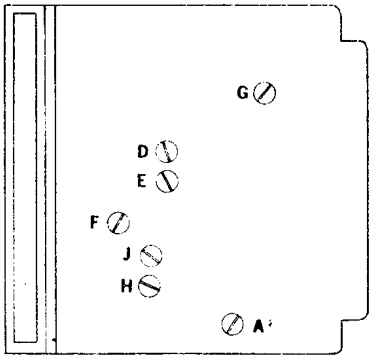

459

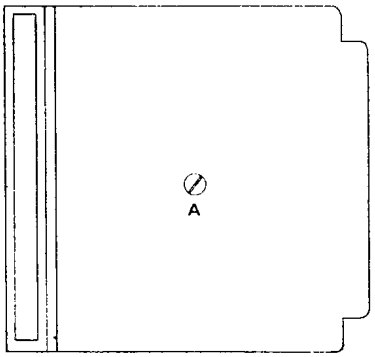

451

Option Location

INSTALLATION CAUTIONS:

1. Do not make any connections with power applied to the equipment or modules installed in the mounting assembly.

2. To avoid damage to voltage sensitive solid-state devices, it is recommended that the 459 be operated from a source of well-filtered battery.

3. Removing and installing modules should be done with care. Do not force a module into place. If excessive resistance is encountered while installing a module, remove the module and check the card guides and connector for improper alignment or the presence of foreign particles.

OPTION CAUTIONS:

1. When opening an option, rotate the screw counterclockwise two revolutions to ensure that the connection is broken. When closing an option, do not overtighten as damage to the plating of the printed circuit board may result.

Scanned @300dpi Steve Cichorsky

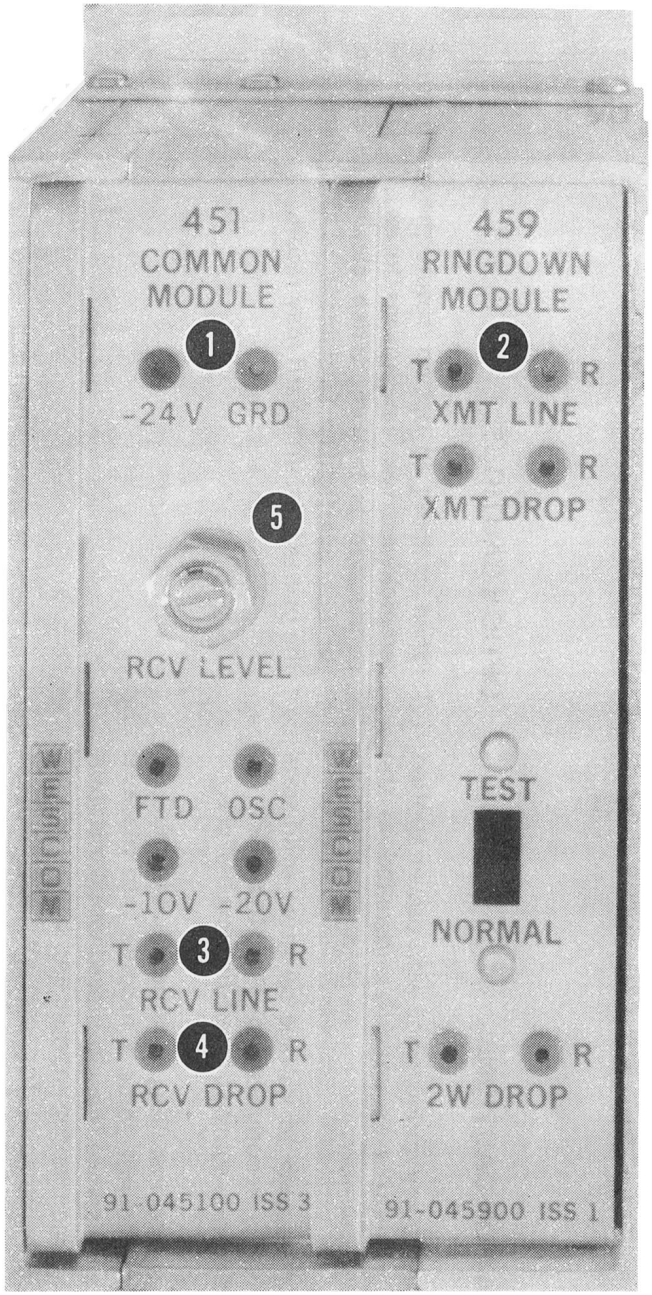

transmit alignment

1. Using the multimeter, verify the presence of −24Vdc here.
2. With local terminal in on-hook condition, connect TMS (set for bridging measurements) here. TMS should read −36+2dBm. Condition local VFD to apply 1000Hz test tone to two-wire drop of local term set. Adjust term set level to −16+0.25dBm. If line amplifiers are used, adjust transmit line amplifier for level specified on CLR.

receive alignment

Réquest distant end to send 1000Hz test tone at proper level and adjust input to 451 Module to +7dBm.

3. Connect TMS (set for bridging measurements) here. Read and note reading.
4. Connect TMS (set for terminating measurements) here, while you
5. Adjust this control until —→ TMS indicates same reading as observed in step 4.

Connect TMS (set for terminating measurements) to drop side of associated terminating equipment. Adjust receive pad to level specified on CLR card.

Remove test equipment and restore all connections. Perform ringing, ring trip and data transmission tests to verify overall performance.

Scanned @300dpi Steve Cichorsky

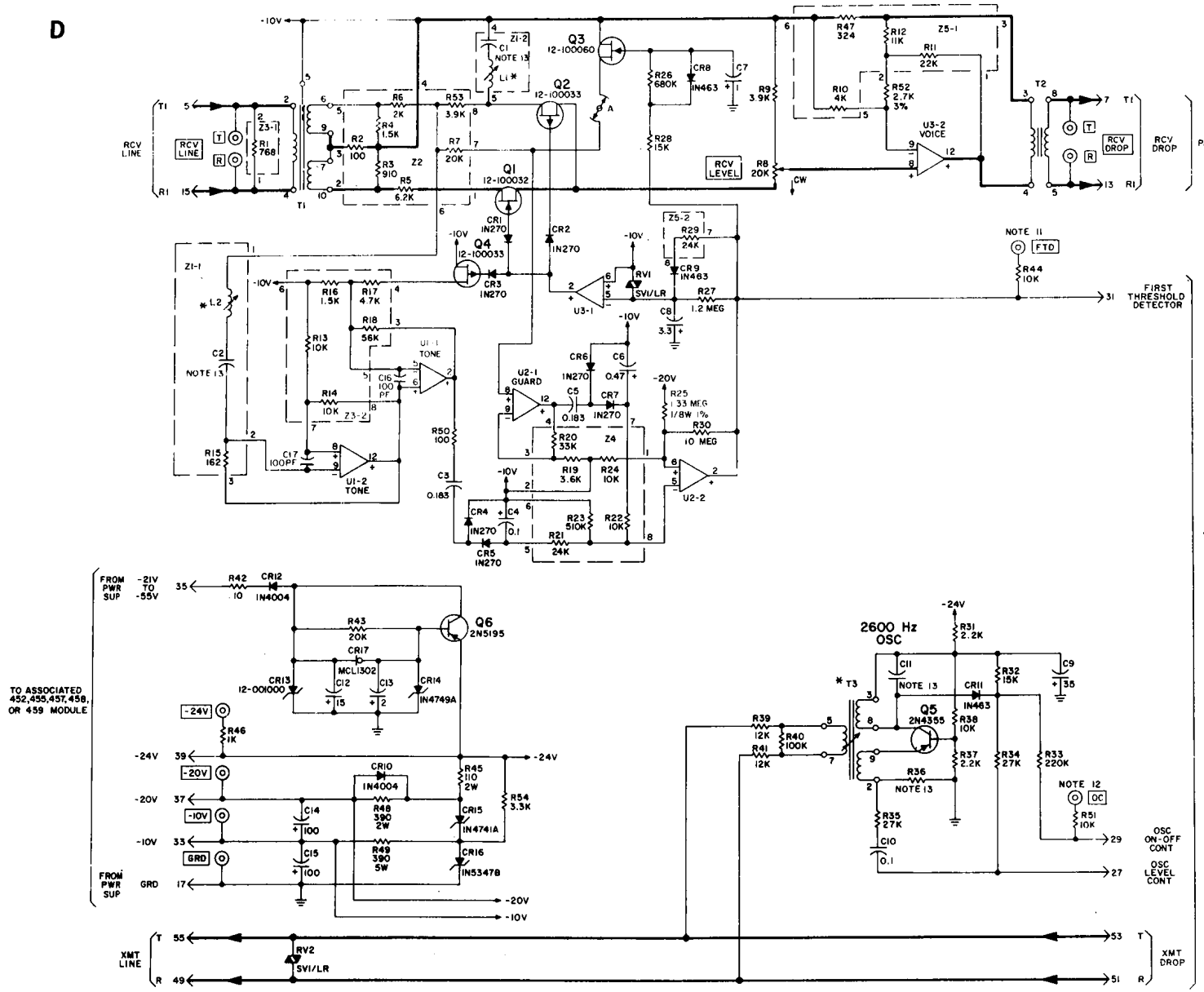

NOTES

1. UNLESS OTHERWISE SPECIFIED:
   RESISTORS ARE IN OHMS, 1/4WATT, 5%
   CAPACITORS ARE IN MICROFARADS.
2. ← PC BOARD CONNECTOR.
3. ▬ PRIMARY TRANSMISSION PATH.
4. ◄ SIGNAL FLOW DIRECTION.
5. ⊙ FRONT PANEL TEST POINT
6. XXX FRONT PANEL DESIGNATION
7. * - FACTORY ADJUSTED OR SELECTED.
8. OPEN CLOSED SCREW OPTIONS
9. ALL IC PINS 7 = -20V. U3, U2 & U1.
   " " " 14 = GRD. U3, U1 & U2.
10. FOR USE IN CONJUNCTION WITH 457, OPEN OPTION "A".
11. 0V WHEN SF TONE IS DETECTED; -20V WHEN SF TONE IS NOT DETECTED.
12. 0V ON PIN 27 AND PIN 29 (OC) PRODUCES HIGH LEVEL OSCILLATOR OUTPUT (-24 DBM ON XMT LINE).
    0V ON PIN 29 ONLY (OC JACK) PRODUCES LOW LEVEL OSCILLIATOR OUTPUT (-36 DBM ON XMT LINE).
13. SEE TABLE FOR COMPONENT VALUE

MODEL	Hz XMT	Hz RCV	C1	C2	C11	R36 *
451-00	2600	2600	.0035	.0035	.015	2K
451-01	2600	2400	.0041	.0041	.015	2K
451-02	2400	2600	.0035	.0035	.015	2K
451-03	1600	1600	9240 PF	9240 PF	.033	1.6K
451-04	2400	2400	.0041	.0041	.015	2K
451-05	2280	2280	4550 PF	4550 PF	.016	2K

Figure 3. Model 451 Common Unit F Signaling Schematic Diagram (Issue 3)

Scanned @300dpi Steve Cichorsky

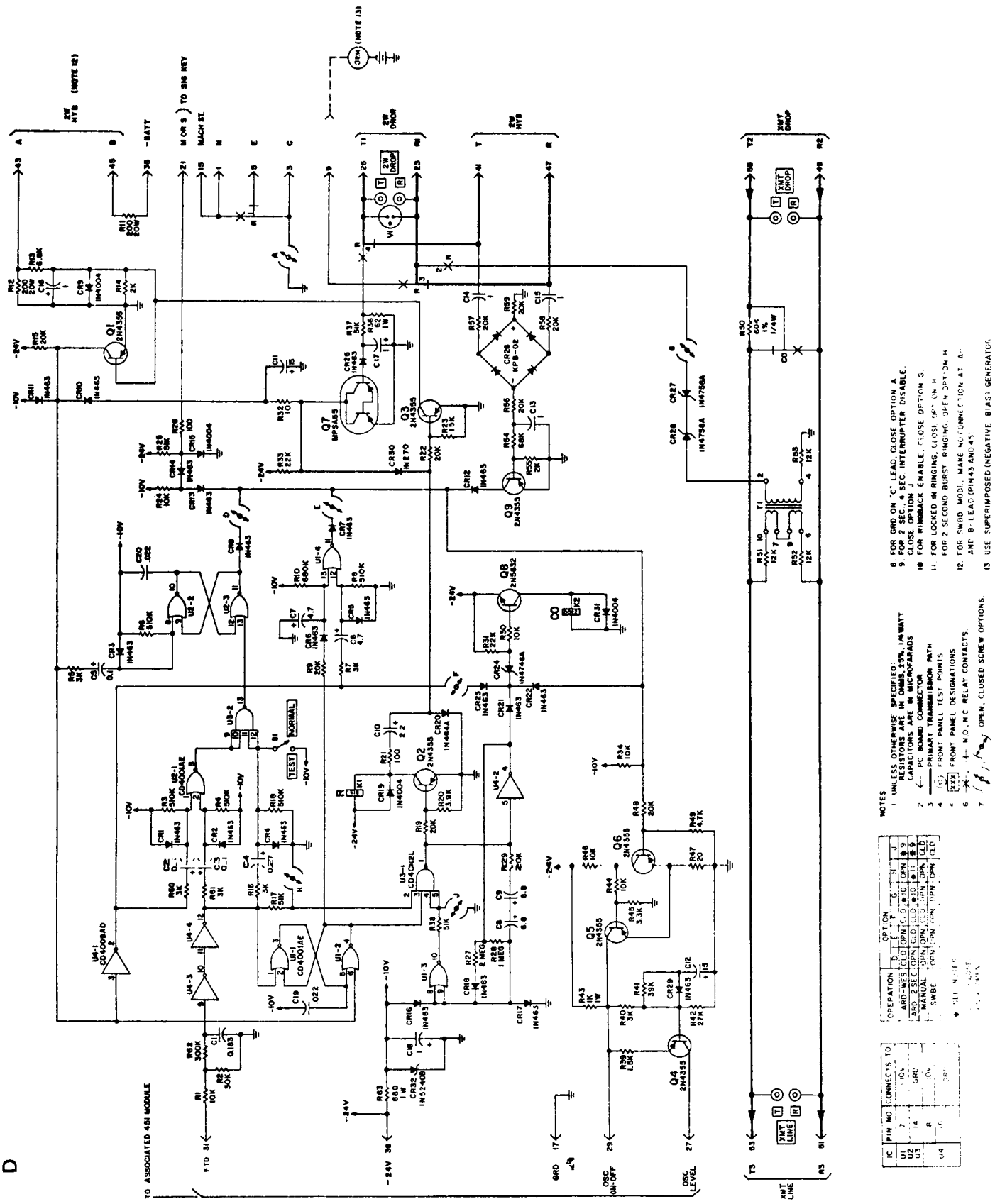

Figure 4. 459 Ringdown Module Schematic Diagram

Scanned @300dpi Steve Cichorsky