FUNDAMENTALS
OF
TELEPHONE COMMUNICATION SYSTEMS

Revised Edition
1969

WESTERN ELECTRIC CO., INC.
222 Broadway
New York, New York - 10038

TCI Library: www.telephonecollectors.info

FUNDAMENTALS
OF
TELEPHONE COMMUNICATION SYSTEMS

This material is prepared for training purposes only and is the property of Western Electric Company, Incorporated, and is loaned on condition that it be returned to the Company upon termination of employment or upon request by the Company prior thereto. No reproduction of this material, in whole or in part, and no disclosure of any part of this material to other than fellow employees, as may be necessary in connection with work assignments, may be made without prior permission in writing from the Company.

Printed in U.S.A.

TCI Library: www.telephonecollectors.info

The material in this text has been compiled to give the Western Electric engineer a comprehensive survey of Bell Telephone Communications Systems.

We would like to express our sincere appreciation to past and present members of the Graduate Engineering Education Staff and to the many other individuals within the Bell System who have given their time and effort to the organization of this book.

We wish to dedicate this book to the engineers of Western Electric who, in order to stay abreast of ever advancing technologies, must judiciously select reference materials that provide the greatest return for the time involved.

E. G. WALTERS
Manager, Graduate Engineering
Education and Technical Training
Programs

TCI Library: www.telephonecollectors.info

CONTENTS

CHAPTER 1	BRIEF HISTORY OF COMMUNICATIONS	1.1
	1.1 Invention of the Telephone	1.1
	1.2 The Origins of a Nationwide Communications Network	1.14
	1.3 Switching Systems - Local Dial Central Office Equipment	1.17
	1.4 Switching Systems - Toll Dial Central Office Equipment	1.21
	1.5 Switching Systems - Electronic	1.22
	1.6 Carrier Systems	1.24
	1.7 A Nationwide and Worldwide Communications Network	1.25
	1.8 The Bell Telephone Laboratories	1.27
	1.9 New Developments	1.29
	1.10 Digital Communications	1.30
	1.11 Future Trends	1.31
CHAPTER 2	STATION EQUIPMENT	2.1
	2.1 Introduction	2.1
	2.2 Sound	2.1
	2.3 The Simple Telephone Circuit	2.2
	2.4 The Telephone Transmitter	2.4
	2.5 The Telephone Receiver	2.6
	2.6 The Telephone Subscriber Set	2.8
	2.7 Sidetone	2.13
	2.8 Dial	2.14
	2.9 Touch-Tone	2.17
	2.10 Ringers	2.18
	2.11 Ringing Multiple-Party Lines	2.20
	2.12 Ringing and Tripping Circuits	2.27
CHAPTER 3	LOCAL MANUAL SYSTEMS	3.1
	3.1 The Manual Switchboard	3.1
	3.2 Switchboard Equipment	3.3
	3.3 Switchboard Circuits	3.7
	3.4 Local Switchboards	3.12
	3.5 Method of Operation	3.15
	3.6 Local Manual Switchboards Today	3.21

TCI Library: www.telephonecollectors.info

CHAPTER 4 STEP-BY-STEP SYSTEMS 4.1

4.1 Introduction 4.1
4.2 Switches 4.3
4.3 General Switching Principles 4.15
4.4 The Switching Network 4.25
4.5 Progressive Control Techniques 4.44

CHAPTER 5 PANEL SWITCHING SYSTEM 5.1

5.1 Introduction 5.1
5.2 Apparatus Elements 5.1
5.3 Equipment Elements 5.13
5.4 Completion of a Full Mechanical Call 5.24

CHAPTER 6 PRINCIPLES OF CROSSBAR SWITCHING 6.1

6.1 Introduction 6.1
6.2 The Crossbar Switch 6.1
6.3 Networks 6.4
6.4 Network Switching Control 6.9
6.5 Generalization of the Marker System 6.10
6.6 Directory Number to Line Number Translation 6.17
6.7 Pulsing Languages 6.18

CHAPTER 7 NO. 1 CROSSBAR AND CROSSBAR TANDEM SYSTEMS 7.1

7.1 No. 1 Crossbar System 7.1
7.2 Crossbar Tandem Switching 7.25

CHAPTER 8 NO. 5 CROSSBAR SYSTEM 8.1

8.1 Introduction 8.1
8.2 Switching Plan 8.5
8.3 Control Equipment 8.20
8.4 System Maintenance 8.26
8.5 No. 5 Crossbar System Switching Telephone Calls 8.28
8.6 Tandem or Toll Through Switch Call 8.36
8.7 Other Types of Calls 8.39
8.8 No. 5 Crossbar Arranged for Centrex Service 8.46
8.9 Additional Customer Service - Line Link Pulsing 8.61

TCI Library: www.telephonecollectors.info

CHAPTER 8 NO. 5 CROSSBAR SYSTEM (Cont.)

8.10 Calls Which Require the Number Group Frame to be used Twice 8.61
8.11 Calls Which Require the Number Group Frame to be used Once 8.62
8.12 No. 5 Crossbar System - Four-Wire Network 8.63

CHAPTER 9 NO. 1 ELECTRONIC SWITCHING SYSTEM 9.1

9.1 Introduction 9.1
9.2 Switching Logic In Solid State Devices 9.11
9.3 Program Store 9.18
9.4 Call Stores 9.35
9.5 Central Control 9.49
9.6 Bus System 9.80
9.7 Central Pulse Distributor 9.82
9.8 Scanners 9.90
9.9 Signal Distributor 9.100
9.10 Switching Network 9.106
9.11 Junctor, Trunk and Service Circuits 9.134
9.12 Master Control Center 9.140
9.13 Method of Operation - No Signal Processor 9.153

CHAPTER 10 4A TOLL SWITCHING SYSTEM 10.1

10.1 Introduction 10.1
10.2 Toll Switching System 10.2
10.3 Trunk Equipment and Traffic in the 4A System 10.46
10.4 Typical Calls 10.59
10.5 Electronic Translator System 10.62

CHAPTER 11 DIRECT DISTANCE DIALING 11.1

11.1 Introduction 11.1
11.2 The National Numbering Plan
11.3 The New Numbering Plan
11.4 Switching Plan
11.5 Control Switching Points

TCI Library: www.telephonecollectors.info

CHAPTER 11 DIRECT DISTANCE DIALING (Cont.)

11.6 Switching Equipment 11.16
11.7 Storing and Forwarding (Variable Spilling) of Digits as Required 11.17
11.8 Prefixing of Digits 11.19
11.9 Automatic Alternate Routing 11.21
11.10 Code Conversion 11.22
11.11 3 and 6 Digit Translation 11.24

CHAPTER 12 TOLL SWITCHBOARDS 12.1

12.1 Introduction 12.1
12.2 The No. 3CL Switchboard 12.1
12.3 No. 3CL Switchboard Circuits 12.9
12.4 Monitoring Arrangements 12.13
12.5 Coin Control Arrangements 12.17
12.6 Miscellaneous 3CL Switchboard Features 12.17
12.7 Centralized Supervisory Console 12.22
12.8 Trunks Associated with Toll Switchboards 12.23

CHAPTER 13 THE TRAFFIC SERVICE POSITION SYSTEMS 13.1

13.1 Introduction 13.1
13.2 General Description of the TSPS System No. 1 13.3
13.3 The Trunk Circuits 13.3
13.4 The "Base Unit" 13.6
13.5 The Switching Network 13.6
13.6 The SPC No. 1A Equipment 13.8
13.7 The 100B TSPS Position 13.9
13.8 The Call Processing Sequence 13.13
13.9 Typical Services Provided 13.15

CHAPTER 14 AUTOMATIC MESSAGE ACCOUNTING 14.1

14.1 Introduction 14.1
14.2 Automatic Message Accounting (AMA) 14.1
14.3 Local Automatic Message Accounting (LAMA) 14.17
14.4 Centralized Automatic Message Accounting (CAMA) 14.22
14.5 Automatic Number Identification - ANI 14.32
14.6 Automatic Message Accounting Center 14.39
14.7 AMA for No. 1 ESS 14.44

TCI Library: www.telephonecollectors.info

CHAPTER 15 OUTSIDE PLANT FACILITIES 15.1

15.1 Introduction 15.1
15.2 Toll and Local Facilities 15.2
15.3 Terminology of Component Sections 15.3
15.4 Crosstalk 15.5
15.5 Open Wire 15.6
15.6 Toll Entrance Cable 15.12
15.7 Cable Facilities 15.12
15.8 Coaxial Cable 15.18
15.9 Submarine Cable 15.23
15.10 Aerial Cable Plant 15.26
15.11 Underground Cable Plant 15.26
15.12 Buried Cable Plant 15.28
15.13 Distribution Wires 15.29
15.14 Protection Equipment 15.32
15.15 Gas Pressure for Toll Cables 15.39
15.16 Line Concentrator 15.41
15.17 Multipling 15.43
15.18 Dedicated Outside Plant 15.45
15.19 Unigauge Customer Loop Plant 15.52

CHAPTER 16 CARRIER SYSTEMS 16.1

16.1 Introduction 16.1
16.2 General 16.3
16.3 Fundamentals of Carrier Telephone Systems 16.5
16.4 Amplitude Modulation 16.8
16.5 Frequency Modulation 16.9
16.6 Pulse Code Modulation 16.10
16.7 A Typical Carrier System Terminal 16.13
16.8 Summary and Description of the Carrier Systems 16.17
16.9 History and General Descriptions of the Carrier Systems 16.17
16.10 Microwave Radio Systems 16.59
16.11 TD-2 and TD-3 Microwave Radio Relay 16.60
16.12 TE Microwave Radio Relay 16.68
16.13 TH Radio System 16.68
16.14 TJ Radio System 16.71
16.15 TL Radio System 16.76
16.16 TL-2/TM-1 Diversity System 16.76

TCI Library: www.telephonecollectors.info

CHAPTER 17 VOICE FREQUENCY REPEATERS 17.1

17.1 Introduction 17.1
17.2 Types of Telephone Repeaters 17.2
17.3 22-Type Repeater 17.4
17.4 44-Type Repeater 17.7
17.5 V-Type Repeater-General 17.7
17.6 Amplifier Units 17.12
17.7 Associated Plug-In Apparatus Units 17.15
17.8 44V4 Repeater 17.16
17.9 E-Type Repeaters 17.17

CHAPTER 18 TELEPHONE POWER PLANTS 18.1

18.1 Introduction 18.1
18.2 Power Service Supply and Distribution 18.8
18.3 Charging Equipment 18.13
18.4 Control and Distribution 18.22
18.5 Ringing, Tone and Signaling Equipment 18.37
18.6 Battery and CEMF Cells 18.52
18.7 Emergency AC Supplies 18.63
18.8 Power Supplies 18.69
18.9 Power Conductors and Filters 18.78

CHAPTER 19 CENTRAL OFFICE TEST FACILITIES 19.1

19.1 Introduction 19.1
19.2 Measurements in DC Circuits 19.1
19.3 Measurements in AC Circuits 19.7
19.4 Toll Testboards 19.15
19.5 Local Testing 19.24
19.6 Voice Frequency Patching Bays 19.30

TCI Library: www.telephonecollectors.info

CHAPTER 1

BRIEF HISTORY OF COMMUNICATIONS

1.1 INVENTION OF THE TELEPHONE

As is commonly known, the telephone business was founded on inventions of Alexander Graham Bell, which grew out of experiments in telegraphy begun in Boston in 1873. Perhaps less well known is that Bell was not an "electrical man," but that instead, his training was predominantly in music, speech, elocution, and anatomy of the vocal and auditory organs. Bell first became interested in telegraphy in 1867, and this led him also to investigate electricity, mostly on a home-study basis.

In 1870, Graham Bell, as he preferred to be known, migrated with his father from England, to Brantford, Ontario. In April, 1871, Graham visited Boston, substituting for his father who had been requested by the Board of Education to experiment with his Visible Speech method of teaching the deaf to speak. After similar work in other New England towns, Graham Bell was appointed Professor of Vocal Physiology at Boston University, in 1873. His preoccupation with professional duties made it necessary to conduct most of his electrical experiments after university hours.

Bell's first interest in electrical communication was to develop a harmonic telegraph which, he hoped, would transmit several Morse messages over the same circuit simultaneously. After abandoning the use of paired tuning forks late in 1873, Bell considered the use of paired tuned-reed instruments. Early models made by himself proved unsatisfactory; this led him to place an order for instruments with Charles Williams, Jr., whose shop facilities and services attracted inventors.

Some of the delivered instruments had not been made in accordance with Bell's intentions, and one day, early in 1874, he strode through the office of Williams' shop and went to the work bench of the young mechanic, Thomas A. Watson, who had worked on the instruments. Although this was a rather unconventional procedure, Bell wanted to talk the job over directly with Watson, whom he had not met previously. Charles Williams continued to assign Watson to Bell's work; Watson also assisted Bell in his experiments after work hours.

TCI Library: www.telephonecollectors.info

Financial assistance soon was needed by Bell, who found the cost of his experiments to be quite burdensome. Fortunately, Gardiner G. Hubbard, who was interested in the problems of the deaf, and Thomas Sanders, whose deaf son had benefited from instruction by Bell, came forward, in the fall of 1874, with an offer to supply the needed money. These informal arrangements were embodied in a written agreement on February 27, 1875. Accordingly, Hubbard and Sanders, each, were to furnish one-half the money needed by Bell, and all three were to share equally in any patents which might be obtained.

While concurrently studying two very early types of acoustically actuated mechanical oscillographs...

These were the "Manometric Capsule" of Koenig, and the Phonautograph of Leon Scott, with improvements by Morey. Bell also obtained a human ear specimen and modified it to work about the same as the much larger phonautograph. Oscillograms recorded by Bell on smoked glass plates with this modified specimen in 1874 are in the Bell Telephone Laboratories' historical collection...

...as a possible means of improving his Visible Speech technique, and experimenting with his tuned-reed harmonic telegraph instruments, Bell conceived the basic principle of the telephone. He outlined it to Watson, for the first time, early in 1875 as follows:

> "If I can get a mechanism which will make a current of electricity vary in its intensity as the air varies in density when a sound is passing through it, I can telegraph any sound, even the sound of speech."

Bell's tuned-reed harmonic telegraph instruments were constructed and intended to function, according to Watson, as follows:

"1. The transmitter has an electromagnet with a reed made of steel clockspring mounted over it and an adjustable contact screw like that of an ordinary electric bell. The receiver had a similar magnet and spring reed but needed no contact screw."

"2. The operation also was very simple. The reed of the transmitter, kept in vibration by a battery connected through the contact screw, interrupted the battery current the number of times per

TCI Library: www.telephonecollectors.info

second that corresponded to the pitch of the reed. This intermittent current, passing through the telegraph wire to the distant receiver, set the reed of that receiver into vibration sympathetically if it was of the same pitch as the transmitter reed. If the two reeds were not of like pitch, the receiver would not respond to the current."

"3. If six transmitters with their reeds tuned to six different pitches were all sending at once, their intermittent currents through the magnets of six distant receivers with reeds tuned to the same pitches, each receiver would, theoretically, select from the mix-up its own set of vibrations, and ignore all the rest."

A. EARLY EXPERIMENTS

Bell and Watson continued to experiment with models of instruments made by Watson as described above. In one room they set up:

1. Three circuit breaking transmitters, tuned to different pitches, each provided with a telegraph key to connect it with a battery and the line wire as desired, and
2. A set of three tuned-reed receivers having the same pitches as the transmitting instruments.

In the other room, designated as the receiving station, another set of three tuned-reed receivers, identical with the three receivers in the sending room, were connected to the far end of the line. Working with this experimental arrangement on June 2, 1875, Bell, at the receiving station at the far end of the line, made the critically controlling discovery, reported by Watson as follows:

"I had charge of the transmitters as usual, setting them squealing one after the other, while Bell was retuning the receiver springs one by one, pressing them against his ear.... One of the transmitter springs I was attending to stopped vibrating and I plucked it to start it again. It didn't start and I kept on plucking it, when suddenly I heard a shout from Bell in the next room, and then out he came with a rush, demanding: 'What did you do then? Don't change anything! Let me see?' I showed him. It was very simple."

TCI Library: www.telephonecollectors.info

The contact point of the transmitter which Watson was trying to start evidently was screwed too hard against the spring, so that when he snapped the spring the circuit had remained unbroken. Continuing with Watson's report:

> "...that strip of magnetized steel, by its vibration over the pole of its magnet, was generating that marvelous conception of Bell's -- a current of electricity that varied in intensity precisely as the air was varying in density within hearing distance of that spring. That undulatory current had passed through the connecting wire to the distant receiver which, fortunately, was a mechanism that could transform that current back into an extremely faint echo of the sound of the vibrating spring that had generated it, but what was still more fortunate, the right man had that mechanism at his ear during that fleeting moment, and instantly recognized the transcendent importance of that faint sound thus electrically transmitted. The shout I heard and his excited rush into my room were the result of that recognition. The speaking telephone was born at that moment."

After trying many variations of their first successful transmission, with and without a battery in the circuit, Bell instructed Watson late on June 2, 1875, to build a new instrument, the one which has since come to be known as Bell's first telephone. A stretched parchment diaphragm. which had been contemplated by Bell while working with the human ear specimen in the summer of 1874, was now added to the previous type of coil and reed receiver assembly, with certain modifications. This first telephone, a "Gallows Frame" Magneto (Figure 1-1) was tried out, as a transmitter on the night of June 3, 1875, the receiver being one of the tuned-reed harmonic telegraph instruments used previously. Later on, two of the new telephones were used as transmitter and receiver. Whereas the harmonic telegraph tuned-reed instruments, when used in pairs, were found capable of transmitting and receiving the fundamental and harmonics of a vibrating spring, the new telephone was capable of transmitting and receiving speech sounds which were more complex, but it still was not good enough to transmit intelligible speech.

TCI Library: www.telephonecollectors.info

B. PATENT APPLICATIONS

During the latter part of 1875, and early in 1876, Bell prepared his specification for a patent application, including both the harmonic telegraph tuned-reed device and a stretched-diaphragm-type instrument. In these instruments the "undulating current" was generated by magnetic induction. "Almost at the last moment" Bell included in his specification a claim which also provided for the variable-resistance method of producing electrical undulations in current supplied by a battery. This application, completed on January 20, 1876, was filed in the Patent Office February 14, 1876. Patent #174,465 registered as an Improvement in Telegraphy, was issued to Bell on March 7, 1876 which happened to be his birthday. He was then 29 years old; Watson was not yet 22.

Although three additional patents were obtained by Bell during his association with Messrs. Hubbard and Sanders, Patent #174,465 has been considered to be the cornerstone of the Bell System of intercommunication. This original group of four patents was assigned in later years to "parent companies" which followed the original three-man association.

In the spring of 1876, Bell pursued further the variable resistance method of producing the desired undulating current. After abandoning other methods, he decided to employ a variation of a method used by him in his previous development of a spark arrestor. A crude device of this type, used in the early days of March, 1876, brought the two experimenters close to their objective. At Bell's request, Watson then built an improved liquid transmitter, consisting essentially of a diaphragm capable of vibrating at voice frequency, and having attached to it a small wire which moved up and down in a liquid conductor (acidulated water), thus varying the resistance in the closed circuit including a battery, at voice frequency.

On the night of March 10, 1876, with Watson stationed at the far end of the line to which one of the harmonic telegraph tuned-reed receivers (Figure 1-2) had been connected, Bell was completing the last wire connection to the new liquid transmitter (Figure 1-3) when he spilled battery acid on his clothes, and he summoned Watson with the now famous call for help, "Mr. Watson, come here, I want you!" Watson excitedly reported that he heard every word -- distinctly, and in this way the feasibility of transmitting and receiving intelligible speech was fully established.

TCI Library: www.telephonecollectors.info

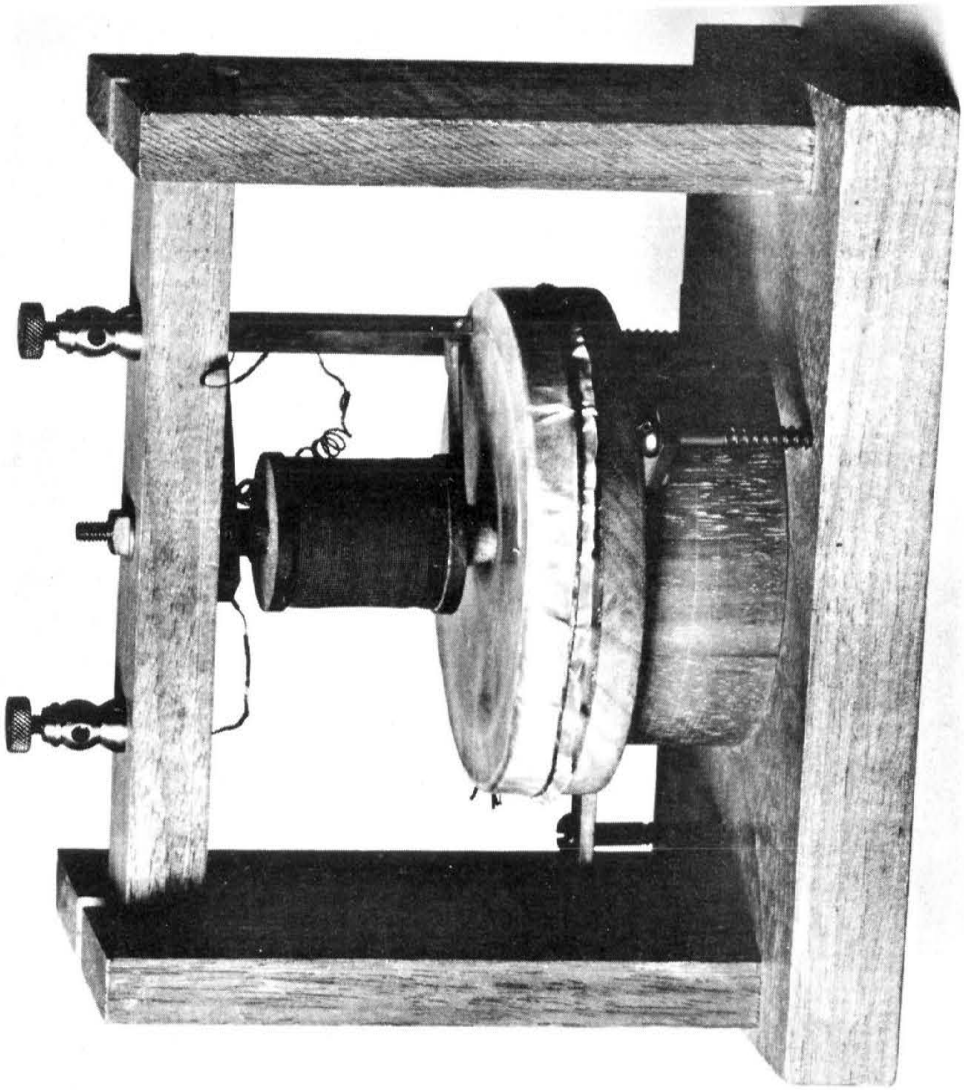

Figure 1-1 Gallows Frame Magneto Phone

TCI Library: www.telephonecollectors.info

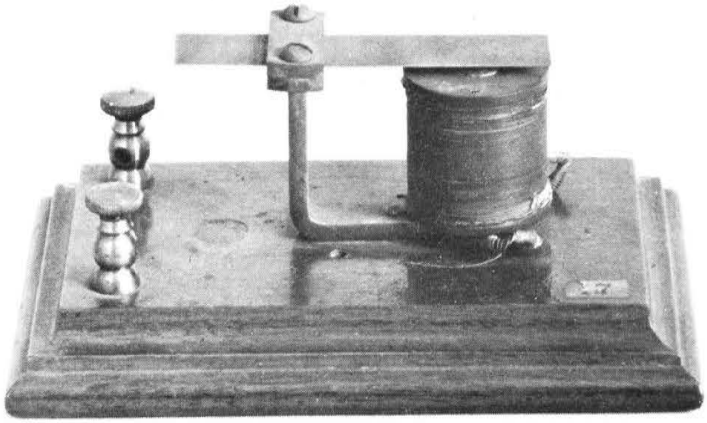

Figure 1-2 Vibrating Reed Receiver

TCI Library: www.telephonecollectors.info

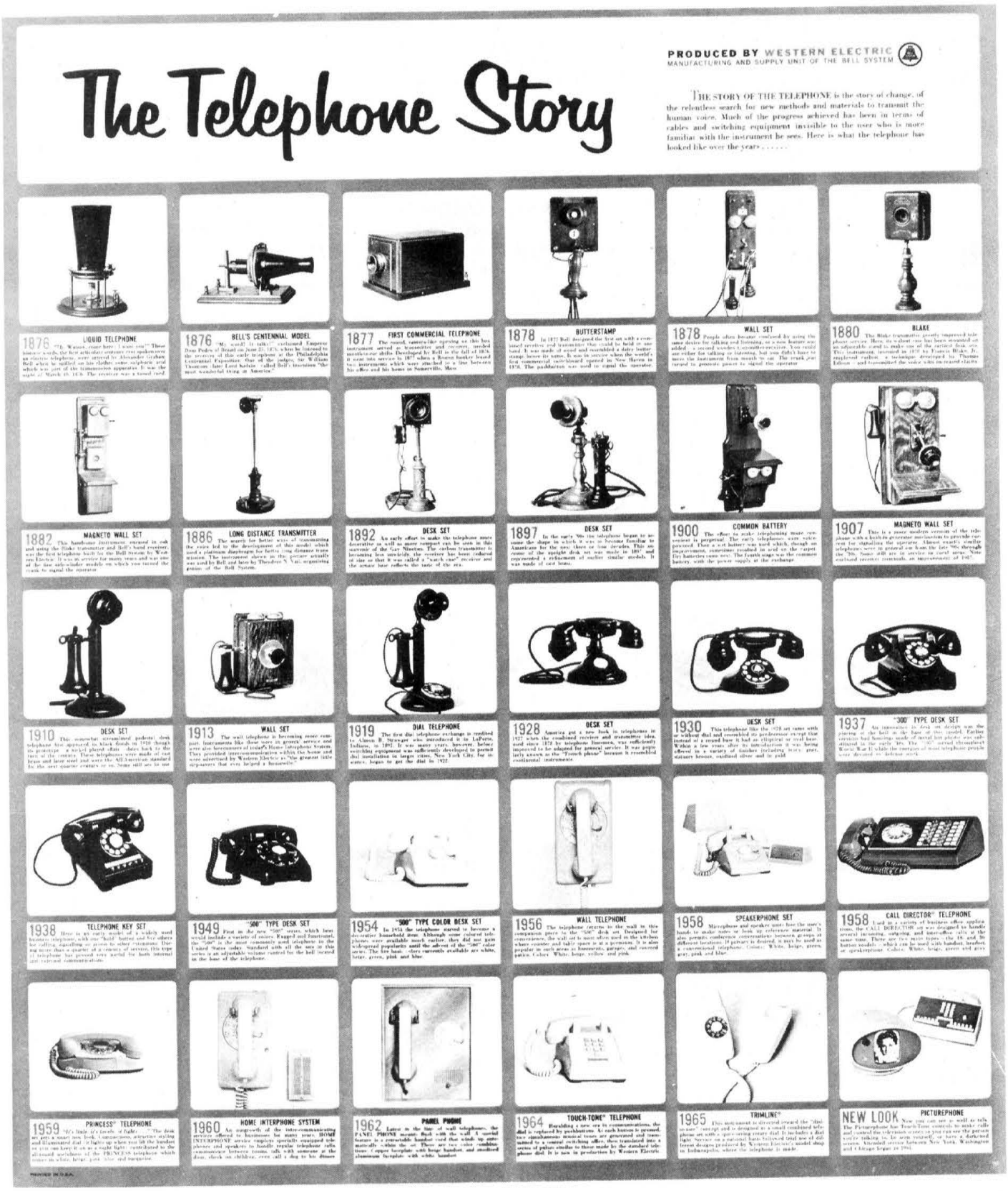

Figure 1-3

TCI Library: www.telephonecollectors.info

The first commercial telephone (Figure 1-3) of 1877 was enclosed in a box with a round camera-like opening serving as transmitter and receiver and needing mouth-to-ear shifts.

Telephones were sold in pairs (one for you and one for the person you wished to talk with).

To use those early phones was simplicity itself. First you placed one telephone in your own home or business, and the other in the home or business of whomever you wished to talk with. Next, you somehow had to connect the two phones. The first telephone advertisement announced, quite helpfully, that you had two choices as to method. One possibility was to purchase the necessary wire and telephone poles yourself and to hire a "mechanic" to install the poles, string the wires, and connect them to the telephones. If this was to be your decision, that first ad gave you the necessary specifications,

> "...No. 9 wire costs 8-1/2 cents a pound, 320 pounds to the mile; 34 insulators at 25 cents each...."

and even calmed you as to any doubts you may have had with the cheery encouragement that

> "...any good mechanic can construct a line...."

or, if you weren't very good at construction projects, the Bell people offered to do the construction for you and give you a "firm" quotation such as the following, which is also taken from the first telephone advertisement:

> "...The price (of poles and setting) will vary (in every locality)...from $100 to $150 a mile...."

(Small wonder that the telephone was at first considered a rich man's toy!)

Once your two phones were connected, you were ready to use them. Now there was a problem at this point - how to signal the person in whose home or office the other phone was installed that you wished to speak with him. (There was no signal bell attached to those early phones.) Here again, the Bell Company was thoughtful enough to provide you with two choices. If you had strong lungs, you could

TCI Library: www.telephonecollectors.info

simply shout into your phone to draw the other party's attention. In fact, in that historic first telephone ad, the Bell people assured you that

> "...Any person within ordinary hearing distance can hear (your) voice calling through the phone...."

As an alternative to this method, if you were willing to pay an extra $5 installation charge, the Bell Company offered to attach a "thumper" just below the mouthpiece of your phone. When operated, this device activated a hammer within a chassis of the phone, making a loud thumping noise that was transmitted to the other phone.

The following year, Alexander Graham Bell designed the "Butterstamp" (Figure 1-3) the first set with a combined receiver and transmitter that could be held in the hand. Made of wood, it resembled a dairy butterstamp and hence its name.

The platinum-carbon contact transmitter (Figure 1-3), the receiver induction coil, the receiver and transmitter in a common handle, the receiver-operated switchhook, and Watson's polarized two-gong ringer actuated by a hand cranked magneto were thought of, or patented, or actually in use by 1878.

About this time, a young Bostonian named Francis Blake invented the variable contact transmitter (Figure 1-3). Capable of transmitting voice with extreme clarity, this instrument, every bit as good as those of Western Union, was offered with patent rights to the Bell Company in return for some of the Bell stock. His offer was quickly accepted. The Blake transmitter placed the Bell Company on even footing with Western Union and became a standard for years to come.

In 1897, one of the most important patent cases in the United States was decided by the Supreme Court. In its decree, it established Emile Berliner, whose formal schooling ended at age 14, as the inventor of the microphone transmitter. This transmitter gave the Bell System, holders of the patent, an advantage over the highly-competitive telephone systems of the day.

By 1900, telephone customers were benefiting from a common battery at the central office for talking and signaling, a bi-polar hand receiver, and some even had Almon Strowger's rotary dial.

TCI Library: www.telephonecollectors.info

New materials have come into play in the evolution of telephone sets. These range from magnetic materials, used in the receivers, to plastics that have made possible the long-life, nonfading, almost-everything-resistant, colored telephones.

Between 1878 and 1919 the telephone saw many changes both as a wall set and as a desk set. Then the deskstand-with-dial of 1919 became a "settled" design. It was followed in 1927 by the "French phone" comprising the receiver and transmitter in one "handle." In 1937, the Bell System began to produce the "300" type desk set wherein the bell was taken off the wall and put in the base of the telephone.

In 1950, the first of the present-day "500" series came into use and soon thereafter began to appear in a variety of colors. With color came an avalanche of new designs and new accouterments to the basic telephone.

Later additions to the Bell Telephone family are shown in Figure 1-3.

Of recent vintage are the Touch-Tone^R Trimline^R set (Figure 1-4) and the Picturephone^R (Figure 1-5). The former combines in one attractive hand-held instrument the receiver, transmitter and push buttons which enable customers to tap out phone numbers quickly. The latter, on the other hand, makes possible not only the transmission of the human voice but also charts, drawings, products, processes and, if need be, the image of those conversing. Indications are that this service may have industry-wide usefulness in the carrying on of day-to-day business.

C. THE FIRST SWITCHBOARD

While the first switchboard used manually operated rotary switches to connect subscriber lines, many of the early switchboards contained jacks connected to each subscriber's line. The operator had a supply of flexible wires with plugs on both ends. To connect two parties, the operator plugged the ends of a cord into the two jacks associated with the lines; auxiliary devices produced the signaling service for ringing and disconnect. The manual switchboard positions were arranged so that additional positions could be placed side by side to obtain larger capacities. One operator could reach over three positions which could serve 150 subscribers. As the number of

TCI Library: www.telephonecollectors.info

Figure 1-4

TCI Library: www.telephonecollectors.info

Figure 1-5

The Bell System's new Model II PICTUREPHONE set can be used to transmit drawings or charts by setting the camera focus at one foot. In the photograph, the "self-view" option is being used to position the graph while it is being transmitted.

TCI Library: www.telephonecollectors.info

subscribers increased, a multiple of three switchboard positions was added. Trunking (permanent connections between nonadjacent positions) added a new dimension to telephone switching networks.

Much of the progress in the design of the early telephone switchboards can be attributed to the efforts of one of the most prolific inventors in telephony, Western Electric's Charles E. Scribner. Responsible for the "Jack-Knife" switch and holder of 441 patents, he made his greatest contribution in developing multiple switchboards.

1.2 THE ORIGINS OF A NATIONWIDE COMMUNICATIONS NETWORK

In August 1876, Bell set up a successful one-way telephone circuit from Brantford to Paris, Ontario. Though the distance was but 8 miles, and the signal none too strong, the event was proclaimed the world over.

A. THE FIRST TELEPHONE EXCHANGE

In the office of E. T. Holmes, in Boston, a simple plug and block apparatus was used in May, 1877, to connect four banks and a manufacturing concern, using in the daytime, wires provided previously for a burglar alarm system in effect at night. The first strictly commercial telephone exchange was established in New Haven, Connecticut, in January, 1878, interconnecting 8 lines and 21 subscribers. It is interesting to note too, that during this period the first classified directory was issued.

At the time of Bell, it must be remembered the communications technology was very much in its infancy. It was the gas light era, commutation was slow: trolleys, trains and ships; and, electric power distribution was primitive.

In the 1880's, the rapid growth of the telephone posed two problems: one, how to interconnect the ever-increasing number of exchanges which tied together subscriber's lines and two, how to hold back the tide of wires blackening the sky; and, poles as high as 90 feet carrying 30 crossarms and 300 wires. The answer to the first problem came in a statement by Theodore N. Vail, the first President of the American Telephone and Telegraph Company, when he remarked, "This linking of city to city, state to state and nation to nation has greater possibilities than we know of yet." The idea of a nationwide network of communications was born.

TCI Library: www.telephonecollectors.info

On June 2, 1880, a telephone line from Boston to New York was authorized. This line was put into service on March 27, 1884. On May 9, 1883, lines were authorized from New York to Philadelphia and Washington, and from New York to Albany. These events marked the beginning of the Long Lines System.

B. PHANTOM CIRCUIT

The answer to the second problem came in the practical application in 1886 of John J. Carty's "Phantom Circiut," a method of transmitting three conversations simultaneously over two pairs of wires which, via careful balancing methods, reduced the number of wires needed. Mr. Carty was also responsible for the adoption of balanced pairs of telephone wires instead of single wires with return through the ground, thus eliminating much of the interference from other telephone wires and power lines. He also developed the first theory of transportation whereby it was possible to balance out the crosstalk that accumulated over long distance from one pair of wires into other pairs.

C. INDUCTIVE LOADING

In 1889, George A. Campbell discovered, simultaneously with Professor Michael I. Pupin, an electrophysicist of Columbia University, that the benefits of inductive loading the adding of inductance - could be realized by locating "loading" coils at specified intervals along Transmission lines. This discovery led to the doubling of the distance that could be reached over open wires on poles, and the tripling or quadrupling of the distance over pairs of wires in cables. It wasn't long before, Campbell extended his circuit theory to the invention of the wave filter which, in turn, led to multichannel telephony.

In 1911 the New York-Chicago line had been extended an additional thousand miles to Denver. The line was built with large copper wires (No. 8, - almost as thick as a lead pencil), and was inductively loaded. There were two pairs of wires, giving two two-way telephone channels (a two-way telephone channel is called a "circuit"), plus a third circuit obtained by phantoming. These heavy wires - more like rods, really - were strung on thousands of poles stretching across the plains and the desert - a big and venturesome project and, for its time, a triumph of engineering and construction unsurpassed.

TCI Library: www.telephonecollectors.info

But Denver was the end of the line - the point of exhaustion. There was nothing left. The engineers who planned that long and slender route hoped it would somehow extend ultimately to the Coast, but they knew that this would depend on developing some kind of amplifier that might respond to the voice currents before they became too feeble, and build them up to a level where they could be projected on to more distant points. Bell people had been working on this, and there were already amplifiers of several sorts - mechanical amplifiers, mercury arc amplifiers - that demonstrated this possibility, but they were either too crude and cumbersome, or too imperfect in response, to be really promising for practical use in a long system.

D. VACUUM TUBE

It was in 1906, when the need was critical, that the "audion" or primitive tube, was being perfected by Lee Deforest. Basically, this device magnified electrical signals which heretofore were too weak for transcontinental projection. Recognized by the Bell System scientists as a technological breakthrough of extreme importance, a concentrated research and development effort was initiated to adapt the vacuum tube to large scale telephone communications.

In 1913, construction began on the route from Denver to Salt Lake City. Vacuum tube repeaters were installed at Philadelphia, Pittsburgh, Chicago, Omaha, Denver, Salt Lake City and Winnemucca, Nevada. In mid-'14 the first trial conversations were held from coast to coast. And, in January of 1915, Alexander Graham Bell, from an office in New York, placed the first official transcontinental call to Thomas Watson in San Francisco - the Watson who had been his assistant in the attic laboratory in Boston where the first telephone was made nearly forty years before. In the same year, speech was transmitted for the first time by radio telephone from Arlington, Virginia, across the continent to San Francisco, to Hawaii, and across the Atlantic to Paris.

The telephone has come a long way since that historic call in 1915. From a single transcontinental line, furnishing three circuits, the capacity for simultaneous coast-to-coast conversations has grown to many thousands. The time for setting up a call has dropped from about a half an hour to a small fraction of a minute.

TCI Library: www.telephonecollectors.info

The quality of transmission too, has improved tremendously. All of this did not happen by chance. The needs of the fast growing communications industry had veritably marked major areas for technological and financial effort.

E. NEGATIVE FEEDBACK

In the 1920's, when multiplex was moving ahead fast, and transmission engineers were interested in long-haul systems with hundreds of channels, the problem of ridding amplifiers of distortion, which accumulates as the telephone lines lengthen, and more and more amplifiers are added, seemed incapable of being overcome. One day in 1927, Harold S. Black, a Bell Telephone Laboratory scientist on his way to work, who too had pondered long on this very same problem envisioned the answer. Using an accidental blank page, he recorded equations that led to a solution destined to completely revolutionize the art of signal amplification over long distances. Known as "Negative Feedback" principle, it was employed in amplifiers used commercially in 1936 between New York and Philadelphia and made possible the installation of a 12 channel carrier system - operating in nonloaded cable pairs - in 1938, between Toledo, Ohio and South Bend, Indiana.

Later, George C. Southworth, a Bell Telephone Laboratory research engineer, transmitted television, radar and other broad-band signals through hollow pipes and dielectric wires, a discovery that led to the development of the Microwave Radio Relay System.

1.3 SWITCHING SYSTEMS - LOCAL DIAL CENTRAL OFFICE EQUIPMENT

In switching, new concepts and applications have made their impact felt in step-by-step panel, crossbar with its centralized intelligence and the stored program of the Electronic Switching System (ESS). The following are brief descriptions of these systems prior to their presentation in the chapters that follow.

A. NO. 1 STEP-BY-STEP AND 350A, 355A, AND 356A COMMUNITY DIAL SYSTEMS

Once started, the telephone network grew rapidly. Engineers began to think in terms of completing calls without the aid of an operator by using switches in the connecting network and a dial for the subscriber. A

TCI Library: www.telephonecollectors.info

Kansas City undertaker, Almon B. Strowger, in 1889 invented a rotary stepping switch that formed the basis for much of the telephone switching equipment now in service. Automatic switching systems had been patented as early as 1879 but the Strowger System, developed by A. E. Keith and others of the Automatic Electric Company, was the first commercailly feasible system. Step-by-Step switches are electromechanical devices usually activated by dial pulses. These switches are mounted on shelves in such a manner that in the establishment of the talking path through the office, the contact brushes of each switch move over a series of terminals arranged in semicircular stacks - an array of 10 rows of 10 sets of contacts.

As the name Step-by-Step implies, the connection of a telephone call is established progressively through a series of such switches. Upon dialing the first digit or letter, a selector steps up to the level indicated by the dial pulses and at that level hunts for a vacant trunk to another selector. This process is repeated at each selector. The dialing of the final two digits operates one of the connectors serving the called line. The next to the last digit dialed steps the switch up to the level indicated and the last digit rotates the switch to the terminal associated with the called subscriber's line. The last switch, known as the connector switch, in addition to making a connection, rings the subscriber, sends a busy tone back if the line is busy and places a busy condition on the called line.

In 1892 the first Step-by-Step office (automatic telephone exchange) was unveiled in La Forte, Indiana by the Strowger Automatic Telephone Exchange. Today, approximately 44% of all lines are still being served by a step-by-step office. Depending upon the type of office, step-by-step systems may accommodate anywhere from 100 to 10,000 subscribers.

B. PANEL DIAL SYSTEM

The first panel dial office units were placed into service in 1914 at the Mulberry and Waverly offices in Newark, New Jersey.

The panel system was developed for use in large metropolitan multioffice areas where, in most cases, the fully mechanical step-by-step system could not be used advantageously. Although this equipment is still being used, it has been superseded by the more efficient crossbar and electronic systems.

TCI Library: www.telephonecollectors.info

In the panel system, the digits, which the subscriber dials, have no direct relation to the groups of trunks to which the various selectors move in completing the call, and the selectors do not move in unison with the dialing. Therefore, it is necessary to provide equipment which will receive the dialing from the subscriber, record it, hold it, change it as necessary, and transmit it to the various selectors to control their movements and direct them to the proper setting. This mechanical operator is called the sender and generally speaking, acts as the control in setting up a call through a Panel office.

Terminals, over which the selector switches move, are arranged in flat vertical rows in multiple banks. The selectors are moved by electric motors rather than electromagnets. As noted above, there is no direct control of selections by the subscriber's dial, but rather, the dialing is registered in a sender which controls and operates the selector circuit. This allows for greater flexibility, more efficient trunk groups and permits dialing over a more complex and extensive trunking arrangement than is possible with the use of the direct control.

C. NO. 1 CROSSBAR DIAL SYSTEM

No. 1 Crossbar, like Panel, was developed for use in large metropolitan areas. A common control system, using extensive logic circuits for the first time, it replaced panel dial for new installations.

In the No. 1 Crossbar system, mechanical motion, which is utilized in the Panel and Step-by-Step systems for hunting in the various switching functions, has been reduced. The Crossbar switch is the principal switching element and it is, briefly, a device employing horizontal and vertical members, each magnetically operated. The operation of a vertical member, in conjunction with a horizontal member, will cause a particular set of contact springs associated with the vertical member to close and to remain closed as long as the magnet of the vertical member remains in operation.

To set up a call in this system, an idle path going in the proper direction is found, seized and immediately used to progress to the next diverging point, where this operation is repeated. Calls are set up on a "marker" basis, under which each step is "marked" before any of the intervening paths are actually seized. When the connection is completed, the common equipment, consisting of senders, markers, connectors, etc., drop out of the call

TCI Library: www.telephonecollectors.info

and proceed with another call. This reduces the amount of equipment tied up during the period of conversation and hastens the setting up of a call. The primary advantages that Crossbar has over Panel are the provision for alternate routing calls and less maintenance.

Some offices are equipped with the Automatic Message Accounting (AMA) System, for billing of 7-digit calls without the assistance of an operator. Others, not so equipped, obtain automatic billing through Crossbar Tandem with Centralized Automatic Message Accounting (CAMA).

The addition of auxiliary senders to the No. 1 Crossbar (non-AMA type) and Panel offices, permitted 10-digit direct distance dialing to other numbering plan areas through the Crossbar Tandem or No. 4 type toll Crossbar offices with 10-digit CAMA. No. 1 Crossbar offices with local AMA were similarly arranged.

Another feature, Automatic Number Identification (ANI) enabled local offices, using CAMA, to identify a calling number and pass this information along to the CAMA machine for billing. Before this, operators were required to manually record this information. ANI is designed to identify one and two party subscribers in No. 1 Crossbar, Panel and Step-by-Step local office areas. The first No. 1 Crossbar system, President 2 Office in Brooklyn, New York, was cut into service on February 13, 1938.

D. NO. 5 CROSSBAR SYSTEM

The No. 5 Crossbar Office is a common-control local and/or toll telephone switching system designed for use in areas having more than 2000 lines. It operates with all local, tandem and toll switching systems and can serve as a combination local and tandem or toll center switching office. No. 5 can be readily arranged for Direct Distance Dialing (DDD), by operators or customers, and for Automatic Message Accounting (AMA) or centralized Automatic Message Accounting (CAMA). It has been designed to operate with as few as 4 digits in a subscriber number or as many as 11. No. 5 provides the following features essential to the expansion of operator and customer toll dialing:

1. 10-11 digit capacity
2. Alternate routing
3. Code Conversion
4. Marker pulse conversion and
5. Six-digit translation

TCI Library: www.telephonecollectors.info

The first No. 5 Crossbar Office went into service on July 11, 1948 at Media, Pennsylvania.

1.4 SWITCHING SYSTEMS - TOLL DIAL CENTRAL OFFICE EQUIPMENT

A. TOLL APPLICATION

Crossbar equipment can be used for switching toll traffic as well as local traffic. In the toll switching application, toll lines or trunks are switched to other toll lines or trunks, whereas in local switching, subscribers' lines are switched to other subscribers' lines or trunks. Long distance operators and, in many areas subscribers, can complete calls directly to subscribers in other distant areas on a dialing basis. For example, an outward toll operator in New York can dial a subscriber's number in any other city which has appropriate switching arrangements. No intermediate or end operator is required. With Direct Distance Dialing (DDD), no operator is needed at the originating end on certain types of calls.

The general toll switching plan divides the United States and part of Canada into many numbering plan areas. Switching systems employing No. 4 Crossbar, Crossbar Tandem, No. 5 Crossbar and, in some cases, Step-by-Step Intertoll are provided at strategic points in each area.

B. NO. 4A/4M TOLL SWITCHING SYSTEM

This is a Crossbar Common Control Switching Point (CSP) system that provides 4-wire paths for establishing connections electromechanically on a nation-wide basis, between intertoll trunks, or between intertoll and toll connecting trunks. Operating on a destination route basis, it is capable of routing a call over a preferred route or any one of as many as six predetermined alternate routes automatically without operator assistance. The 4A System and its predecessor the 4M have the same features and operating capabilities. The No. 4 System uses multi-frequency (MF) pulsing, that considerably shortens the time required for transmitting pulses controlling the switching equipment. Features essential to the operation of the No. 4, and to Direct Distance Dialing (DDD) are:

1. Crossbar switches, arranged on incoming and outgoing link frames, together with the necessary trunks and toll terminal equipment, care for the switching path.

TCI Library: www.telephonecollectors.info

2. Common control equipment (consisting of senders, connectors, decoders, card translators and markers) determines routing, sets up switching paths, and receives and sends the pulsing and signaling information required for completion of the call.

3. Selection of routes in rapid succession accomplished by the electromagnetic card translator.

4. Predetermined and alternate routing is punch coded on metal cards.

Philadelphia, Pennsylvania was the recipient of the first Toll Switching installation in 1943.

C. CROSSBAR TANDEM SYSTEM

Crossbar Tandem is a two-wire switching system using Crossbar switches and other apparatus. Originally developed as an intermediate mechanical switching office for large metropolitan areas with Panel and No. 1 Crossbar local offices, it provides three functions for the local office:

1. Permits economical trunking by combining small volumes of traffic into larger volumes which are routed over common trunk groups.

2. Translates almost any type of inpulsing to any type of outpulsing, thereby connecting otherwise incompatible local offices.

3. Permits centralization of equipment and services.

With the advent of Extended Area Customer Dialing and Direct Distance Dialing (DDD), the following switching features have been developed for Crossbar Tandem to accommodate interzone trunking:

1. Intertoll traffic
2. Alternate Routing
3. Storing and Sending Forward Digits as Required
4. Code Conversion
5. 6 digit Translation

1.5 SWITCHING SYSTEMS - ELECTRONIC

In Crossbar Systems, electromechanical switching was developed to the fullest extent feasible. Major advances are now taking place in Electronic Switching.

TCI Library: www.telephonecollectors.info

The Bell System's Electronic Switching System (ESS) is a stored program system which utilizes the high speed of electronic devices to perform the basic functions of telephone switching.

High operating speed permits a very small number of control circuits to serve a very large number of lines and trunks. System control is accomplished by subdividing the work, required to process each call, into segments and time-sharing the segments of other calls. The system's actions are determined by a program stored in semipermanent memory. Variations in features of different offices are accomplished in the stored program rather than in apparatus, wiring and equipment options. Office units, which are traffic dependent, are accommodated by a plan which minimizes engineering and installation efforts required for new offices and additions to existing offices. Wide use is made of transistors and other solid-state devices which operate more than 1000 times faster than conventional switching apparatus. The system's high speed and special equipment make possible a variety of new services which greatly increase the value and flexibility of each customer's telephone. Although ESS uses electronic components, it is comparable in many ways to the present common control switching systems, especially No. 5 Crossbar.

A. NO. 1 ELECTRONIC SWITCHING SYSTEM (NO. 1 ESS)

Succasuna, New Jersey was selected for the Bell System's first full-scale commercial electronic central office "Cutover" in May 30, 1965. It is a very sophisticated common control switching system which can serve as many as 65,000 station lines. Highly reliable and compact, this office has high-speed solid state devices that provide unlimited flexibility, great dependability and economy in every phase of its operation. A stored program that utilizes magnetic memory devices to direct the system, provides such unique "customer calling services" as:

1. Two and three-digit dialing for frequently called numbers
2. Automatic routing of incoming calls to another phone when the original called line is busy
3. Dialing a code to forward incoming calls to another telephone when the customer is away from home, and
4. Dialing a third telephone into an existing telephone conversation.

TCI Library: www.telephonecollectors.info

Taking full advantage of its data processing capabilities, this system has been programed for Automatic Message Accounting operation.

B. NO. 101 ELECTRONIC SWITCHING SYSTEM (NO. 101 ESS)

The first commercial trial for an electronic PBX, Centrex and other modern subscriber service features was inaugurated in November 1963 at Cocoa Beach, Florida. As in the No. 1 ESS, this system also utilizes high-speed solid-state electronic components in conjunction with a binary stored program control. Among the new features of this system are:

1. Abbreviated dialing in which frequently called outside numbers, either local or long distance, may be reached by dialing three digits.

2. Touch-Tone dialing in which extensions can be equipped with numbered touch buttons instead of a rotary dial.

3. Call transfer in which calls from the outside can be switched from extension without going through the switchboard operator.

4. Conference calling in which as many as two additional parties can be dialed into an existing conversation by the party originating the conversation.

1.6 CARRIER SYSTEMS

The carrier principle is a method of converting voice frequencies of a communication channel to a corresponding band of frequencies centered about a particular frequency beyond the voice range, known as the carrier frequency. By suitably spacing such carrier frequencies over a comparatively wide range, several communication channels may be combined to transmit signals or voice over a single pair or wires without interference from another channel. Thus, the carrier system is used to increase the capacity of open wire, cable conductors and microwave for carrying telephone, telegraph and video messages.

Early carrier systems provided up to three or four additional channels, as well as the original voice-frequency channel, on each pair of wires. The number of channels which a carrier system can accommodate is limited by the band of frequencies which can be transmitted economically over the conducting wires.

TCI Library: www.telephonecollectors.info

As a result of continuous improvements to carrier systems, we cannot realize utilization of the carrier principle which will permit the transmission of 3600 telephone conversations over a pair of coaxial cable conductors in the L-4 Carrier System. Yet, with the potential now offered by solid-state devices (repeaters using transistor amplifiers), it is possible that even wider band coaxial systems than the L-4 will be designed.

1.7 A NATIONWIDE AND WORLDWIDE COMMUNICATIONS NETWORK

Today, as the result of the efforts by Long Lines - the long distance operating unit of the A.T.& T. - which builds, operates and maintains the interstate network of circuits and other facilities in the United States that make possible nationwide and world wide communications, telephone users in the United States can be connected with almost all the telephones in the world.

A. LONG DISTANCE OPERATIONS

There are in the United States 2100 cities in which there are operating offices for handling long distance calls. These cities are called toll centers.

In order for a long distance call to be made, the call must travel from the local exchange at which the call originates to a nearby toll center, then (directly or indirectly) to toll center near the exchange at which the call terminates, and then to that local exchange itself. To facilitate the connection of any two of the 2100 toll centers, there is a special set of 210 toll centers that are called switching points and that perform a function in connecting the toll centers that is comparable to the function of a central office switchboard in connecting the subscribers whose lines are connected to that switchboard.

Each toll center is connected directly with at least one of these switching points. In turn, each switching point is connected, directly or indirectly, with each of the other switching points.

B. DOMESTIC TELEPHONE MESSAGE SERVICE

Long Lines' responsibility is to handle interstate calls which originate in the territory of one Associated Company and terminate in the territory of another. Long distance calls other than the type just defined are handled by the Associated Companies.

TCI Library: www.telephonecollectors.info

Consequently, most intrastate long distance calls are handled by the Associated Companies. Also, most interstate long distance calls that originate and terminate within the same Associated Company are handled by the Associated Companies.

In general, the Long Lines Department provides circuit facilities for the longer haul interstate traffic of the Bell System. During 1966, long distance interstate telephone messages - jointly handled by Long Lines and the Associated Companies - totaled 1,780,300,000. This traffic amounted to 5,706,000 messages per average business day. To assure a smooth flow of communication - particularly in times of especially heavy traffic, disaster, or equipment failure, the Long Lines Department and the Associated Companies have established twelve regional network control centers as well as an overall control center in New York.

Each of the twelve regional centers is divided into several sectional centers, then, in turn, into smaller areas called primary centers and, finally, toll centers containing the switching machines where calls first enter or leave the long distance network.

Together, the staffs at these centers act as a network management team, handling the interstate network of circuits and switching equipment that serves customers with about 95,000,000 telephones - and about 55,000 teletypewriter machines.

Under a master switching plan, the network, like a computer, is programmed to handle calls in a systematic, economical manner with alternative routes provided when normal ones are not available. It is seldom that a "no-circuit" tone or announcement must be made in order to ask the customer to try his call again later.

The success of this management of the flow of calls depends upon automatic switching equipment, a system of alternative routings, and full knowledge of the second-by-second state of the network as noted briefly in the material on communication systems.

C. OVERSEAS SERVICE

The Long Lines Department furnishes service by means of ocean telephone, satellite, radiotelephone, and over-the-horizon radio to countries and territories overseas and by radiotelephone to ships on the high seas and to airplanes. The volume of overseas messages handled

TCI Library: www.telephonecollectors.info

by Long Lines was about 10,000,000 during 1966. Overseas telephone service, together with service to points on this continent, makes it possible for telephone users in this country to reach more than 97 percent of the telephones in the world.

Overseas telephone facilities are also used in transmitting television and radio programs to and from countries abroad. Long Lines also makes circuits available to the international telegraph carriers for their use for their own customers. Many of the underseas telephone cables were laid across the ocean floor by the Bell System cable ship, C.S. LONG LINES (Figure 1-6).

In addition, circuits for overseas communications are leased from the Comsat Corporation, which provides the service via orbiting satellites. The Bell System pioneered communication by earth satellites with the Echo balloon and TELSTAR[R] satellites.

1.8 THE BELL TELEPHONE LABORATORIES

The Bell Telephone Laboratories has the reputation of being the finest industrial laboratory in the world. A large part of this reputation is due to the work of the scientists noted thus far. Further indication of the importance of the research work can be found also in the fact that Bell Laboratories is an industrial labortory whose researchers have won two Nobel prizes. One was awarded to Clinton J. Davisson in 1937 for the codiscovery of electron diffraction and the wave properties of electrons. Another, in 1956, went to William Shockley, John Bardeen, and Walter H. Brattain for their investigations into semiconductors and for the discovery of the transistor effect.

The invention of the transistor opened the era of modern electronics, an era in which Bell Laboratories has played a significant role. Another invention was the solar battery, which has been the source of power for many long-lived earth orbiting satellites. The principles of the laser were first described by a Bell Laboratories researcher, Dr. Arthur Schawlow, working with Dr. Charles Townes of Columbia University. Later, the first continuously operating gas and solid-state (ruby) lasers were created by Bell Laboratory scientists.

TCI Library: www.telephonecollectors.info

Figure 1-6 C.S. Long Lines

TCI Library: www.telephonecollectors.info

Communications achievements which have come from Bell Laboratories include: two-way transoceanic radiotelephone service, the coaxial cable, microwave radio relay systems, the nationwide television network, over-the-horizon microwave transmission, transoceanic telephone cable systems, direct distance dialing, and electronic switching systems.

The concept of communications by satellite was first proposed scientifically by Dr. John R. Pierce of Bell Laboratories. Later, the TELSTAR experimental communications satellite, which stirred the world when it first spanned the Atlantic with live television in 1962, was engineered, constructed, and successfully tested by Bell Laboratories development engineers. They continued their experiments with the second TELSTAR satellite, which was put into orbit in 1963.

1.9 NEW DEVELOPMENTS

A. HOLOGRAPHY

Recently, the Bell Telephone Laboratories have been pioneering in Holography which holds great potential for important communications functions. Holography, sometimes called "lenseless photography" of "wavefront reconstruction photography" is a way of recording the unfocused light reflected or transmitted by an object or objects. The recording, called a hologram, is usually made by exposing a photographic plate to light reflected from a subject and a reference source. The subject and the reference source (often a mirror) are illuminated with laser light. Two aspects of holography that are of primary interest at the Laboratories are:

1. The recording and transmitting of pictoral information, including possible uses in PICTUREPHONE and television services; especially, the three dimensional imaging capability of holography.

2. Utilization as a memory device.

Holography is still in its infancy. The advent of the laser, with its intense, coherent output (light waves) has given great impetus to its progress. Its potential however, in the final analysis, to the communications media must be evaluated in terms of its economic feasibility.

TCI Library: www.telephonecollectors.info

1.10 DIGITAL COMMUNICATION

Transmission systems carrying all types of communications in a digital pulse stream are gradually being introduced into the Bell System. Eventually, they will be connected together in a digital hierarchy to form a nationwide digital communications network.

For some years Bell Telephone Laboratories has been planning a digital network that will carry all types of communications signals, including:

1. Voice
2. Digital Data
3. Facsimile
4. PICTUREPHONE Service
5. Television

These signals will be mulitplexed together and transmitted on high-speed pulse streams.

Although the complete concept of a digital communications network includes digital switching as well as transmission facilities, most of the effort has been on the latter. T1 Carrier, the first digital transmission system to be designed, is now used commercially in many of the more heavily populated areas. At present, a medium-speed system and a commercial high-speed system are being developed. An experimental high-speed system has been built. The domestic communication satellite system, recently proposed by the Bell System to the FCC, would employ digital transmission and would be interconnectable with the digital network.

With the rapid development of solid state electronics and its application technologically to digital transmission, it may not be too far in the future when a digital network will be capable of:

1. Operating over any distance, and
2. Carrying several thousand calls, several television channels, or many data signals on a single pulse stream.

TCI Library: www.telephonecollectors.info

As time goes on, digital communication systems are expected to assume an increasingly important role in the Bell System, but analog systems will continue to provide the bulk of communication for many years.

1.11 FUTURE TRENDS

The past history of communications has been studded with developments that have contributed significantly to man's progress. At the turn of the century, the Bell System mobilized its resources to bring about a nationwide telephone network. It was a period in which the ground work was prepared for the transition from the manual system to the switching system. Later, we saw the advent of the solid state era in which the transistor, communication satellite and the computer made their entries. Today too, we are witnessing the increase in the variety and number of products, systems and services.

What will be the demands of the future? The following are comments by two world-renowned Bell Telephone Laboratory scientists.

Dr. John R. Pierce - Executive Director, Research Communications Sciences Division:

> "I see a great extension of satellites using radio frequencies for both domestic and foreign communication. It's a way of getting a lot of circuits quickly. And of course television is now extending through the ultra-high frequency as well as the high frequency. Ultimately, you run into an end as the air waves become full. But you never run into an end in the demand for communication. Thus, I think that communication--even mass communication--will eventually outgrow the air waves. We will have more and more of it by wire, or by millimeter waves going through hollow tubes called waveguides, or through laser beams that can carry tremendous amounts of communications, but which will have to be protected from the weather by pipes. I think that ultimately a large fraction of communications, even those that now ordinarily go by radio, will probably have to go by some guided means."

TCI Library: www.telephonecollectors.info

Dr. William O. Baker - Vice President, Research:

"In the coming years we must prepare to anticipate and meet customer needs for communications facilities of ever-increasing quality and quantity ... which will involve the transmission of new magnitudes of communications, including intermixed batches of data, works and graphics beyond anything conceived hitherto ....

"The new technology should enable us to enhance the usefulness of all our service offerings."

TCI Library: www.telephonecollectors.info

CHAPTER 2

STATION APPARATUS

2.1 INTRODUCTION

In considering the various types of communication facilities, we will start with the basic apparatus at each end of the circuit and then, in separate chapters, discuss the equipment available for connecting the two. Normally the equipment at each end of the circuit is considered customer station equipment, or even more briefly, the customers telephone. It has the triple function of permitting talking, listening and signaling. Simply stated, however, the telephone is defined as an instrument for converting the mechanical energy of the speaker's voice into electrical energy having similar characteristics and then in turn converting the electrical energy back into similar sound waves at the listener's end.

2.2 SOUND

Since the primary source of the electrical signals transmitted over a telephone system is a speech sound wave and the end product of the transmission system is the reproduction of the original sound wave, a knowledge of the characteristics of sound will aid in the understanding and operation of our communication facilities.

The word sound has two distinct meanings. A physiologist or psychologist defines sound as a sensation produced by certain types of atmospheric disturbances. The physicist uses sound to define the disturbances rather than the sensations they produce.

These disturbances have been found to be waves in the air much like the waves produced when a stone is tossed in a pond. Sound waves travel in concentric spheres and expand at a definite rate of travel which has been found to be approximately 1075 feet per second varying somewhat with altitude and atmospheric conditions.

TCI Library: www.telephonecollectors.info

Sound waves are produced by the vibration of some source, such as a tuning fork or the human vocal chords. The rate of vibration of the source determines the frequency of the sound. A rapidly vibrating source will produce a tone of high pitch while a tone of low pitch will be produced by a slowly vibrating source. The frequencies of audible waves are in the range of about 20 to 20,000 cycles per second.

Audible sound is thus defined as a disturbance in the atmosphere whereby a form of wave motion is propagated from some source at a velocity of about 1,075 feet per second with a frequency range of 20 to 20,000 cycles per second.

Fortunately, in telephone transmission, which is essentially a problem of conveying "intelligibility" from the speaker to the listener, we are not seriously concerned with sounds having either fundamental or harmonic frequencies that extend throughout the entire scale of audibility. The sound frequencies which play the most important part in rendering the spoken words of ordinary conversation intelligible are the band of frequencies within the audible scale ranging from approximately 200 to 3,500 cycles per second.

2.3 THE SIMPLE TELEPHONE CIRCUIT

The original telephone, as invented by Bell in 1876, consisted of a ruggedly constructed telephone receiver, which at that time served as both transmitter and receiver. The telephone circuit in its simplest form consisted of two wires terminated at each end by such an instrument but without transmitter or battery and without signaling features. Figures 2-1 and 2-2 shows such a circuit.

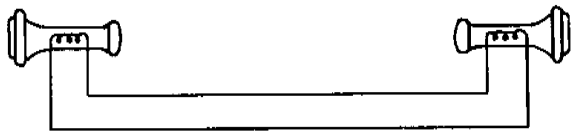

Figure 2-1 Elementary Telephone Circuit

TCI Library: www.telephonecollectors.info

At the speaker's station, the sound waves of the voice strike the metal diaphragm of the telephone receiver, and the alternate condensations and rarefactions of the air on one side of the diaphragm establish in it a sympathetic vibration. Located behind the diaphragm is a permanent bar magnet whose magnetic field is crowded in the vicinity of the metal diaphragm. The vibration of the diaphragm causes a corresponding change in the number of magnetic lines passing through the receiver winding, resulting in the turns of the winding being cut by the building up and collapsing lines. This establishes a varying electric voltage and current in the winding of the telephone receiver, having wave characteristics similar to the characteristics of the sound wave. This varying current passes over the connecting wires and through the receiver winding at the distant end. There it alternately strengthens and weakens the magnetic field of the permanent magnet, lessening and increasing the pull upon the receiving diaphragm, and causing it to vibrate in unison with the diaphragm at the transmitting end, although with less amplitude. This vibrating diaphragm reproduces the original sound, conveying intelligibility to the listener at the receiving end.

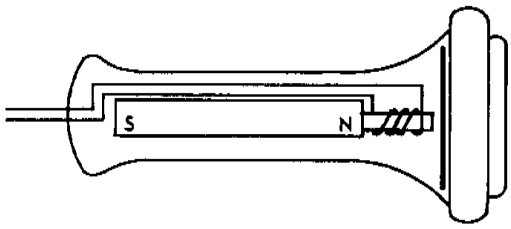

Figure 2-2 Bar-Magnet Transmitter-Receiver

This instrument contains no source of power, but relies entirely on the power generated by the talker's voice, the strength of the field of flux set up by the permanent magnet, and the resistance of the connecting wires. "Voice powered" type sets still exist today (with greatly improved magnetic structures) and are frequently used in the military and in explosive atmosphere environments.

TCI Library: www.telephonecollectors.info

Later developments and improvements in the subsets brought about the splitting of the transmitter and receiver into separate units.

2.4 THE TELEPHONE TRANSMITTER

Although the principle of Bell's original telephone applies to the present day telephone set, it was appreciated in the early stages of telephone development that the electrical energy generated by a diaphragm vibrating in a comparatively weak magnetic field was insufficient for the transmission of speech over any considerable distance. The energy could, of course, be increased by using stronger magnets, louder sounds, and the best possible diaphragms, but even with any ideal telephone receiver that might be perfected, voice transmission would be limited to comparatively short distances. One year after the invention of the original telephone, the Blake transmitter was introduced. It worked on the principle of a diaphragm varying the strength of an already established electric current, instead of generating electric energy by means of electromagnetic induction. It thus became possible to establish an electric current with an energy value much greater than that conveyed to the instrument by a feeble sound wave. The battery in this case was the chief source of energy and the vibration of the diaphragm acted as a means for regulating or modulating this energy supply, rather than as a generating device.

The principle of the transmitter is illustrated by Figure 2-3. The battery establishes a direct current in a local circuit consisting of the primary winding of an induction coil, and a cup of carbon granules. One side of

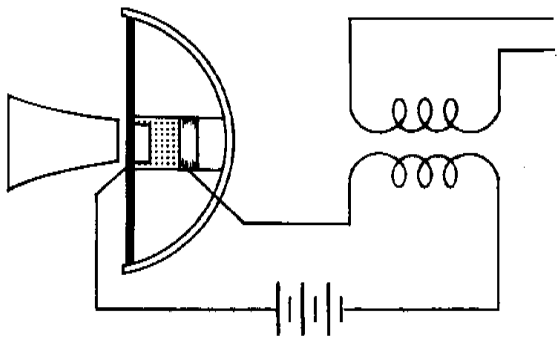

Figure 2-3 Principle of the Telephone Transmitter

TCI Library: www.telephonecollectors.info

this cup rests against a small carbon disc rigidly connected to the transmitter diaphragm. The vibrating transmitter diaphragm varies the pressure on the carbon granules, which causes the resistance of the electric circuit through the carbon granules to vary correspondingly, thereby causing fluctuations in the value of the direct current maintained in the circuit by the battery. These fluctuations, represented by varying direct-current values, establish an alternating emf in the secondary winding of the induction coil. This, in turn, sets up an alternating current through the local receiver, over the line, and through the distant receiver. The operation of the distant receiver is the same as has been explained previously.

The remarkable feature of this unit is the fact that the device is an exceedingly efficient converter from acoustic energy to electric energy. Numerically, the ac power is in the order of one thousand times greater than the acoustic power actuating the unit. The additional energy results from the battery associated with the transmitter.

Figure 2-4 shows a cross section of a standard transmitter unit for subscriber's telephone sets. It is of the "direct action" type; the movable element attached to the diaphram, which activates the granular carbon, is an electrode that serves the dual purpose of contact and pressure surface.

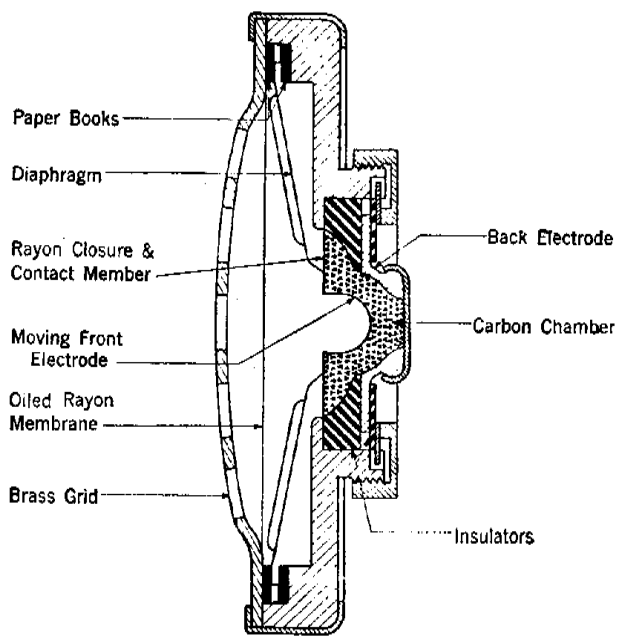

Figure 2-4 Cross-Section of Transmitter Unit

TCI Library: www.telephonecollectors.info

2.5 THE TELEPHONE RECEIVER

The earliest forms of telephone receivers were made with a permanent bar magnet as shown in Figure 2-2. The efficiency of the receiver was later greatly increased by the use of a horseshoe magnet as shown in Figure 2-5. This permitted the lines of magnetic force to pass in a much shorter path from one magnetic pole to the other through the iron diaphragm. The principle of operation of receivers currently in use in the telephone plant does not differ fundamentally from that of the original type although the receivers themselves are generally quite dissimilar in physical appearance.

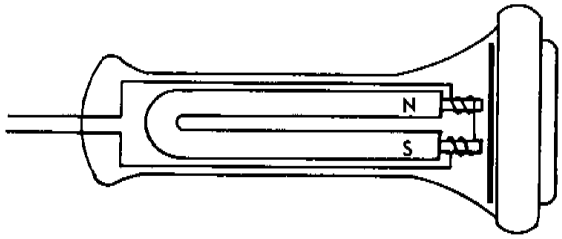

Figure 2-5 Horseshoe-Magnet Receiver

In the receiver the permanent magnet is important not only because it increases the amplitude of vibration of the diaphragm when the voice current is flowing through the windings, but also because it prevents the diaphragm vibrating at twice the voice frequency. This is illustrated in Figure 2-6. When a piece of soft iron is held near an electromagnet, it is attracted by the magnet regardless of the direction of the current in the windings. Thus, an alternating current in a winding on a soft iron core will assert an attraction during each half cycle, which in the case of the receiver diaphragm will establish a vibration with a frequency twice that of the current. If, on the other hand, a permanent magnet is used, the alternating current establishes a vibration of the same frequency as the current by merely increasing or lessening the pull already exerted on the diaphragm.

TCI Library: www.telephonecollectors.info

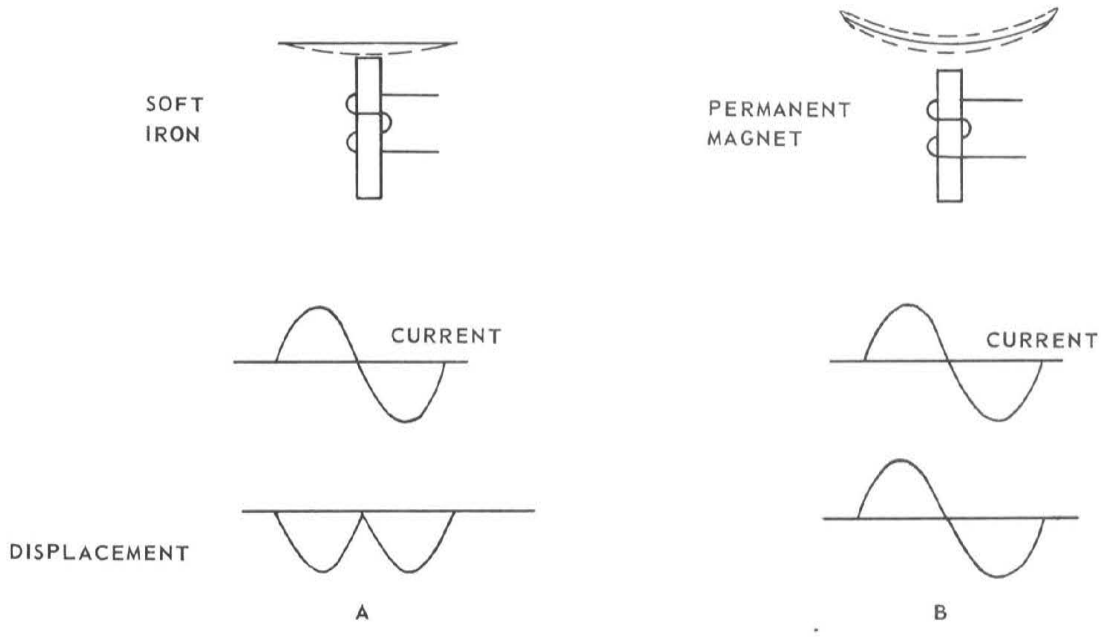

Figure 2-6 Receiver Diaphragm Displacement

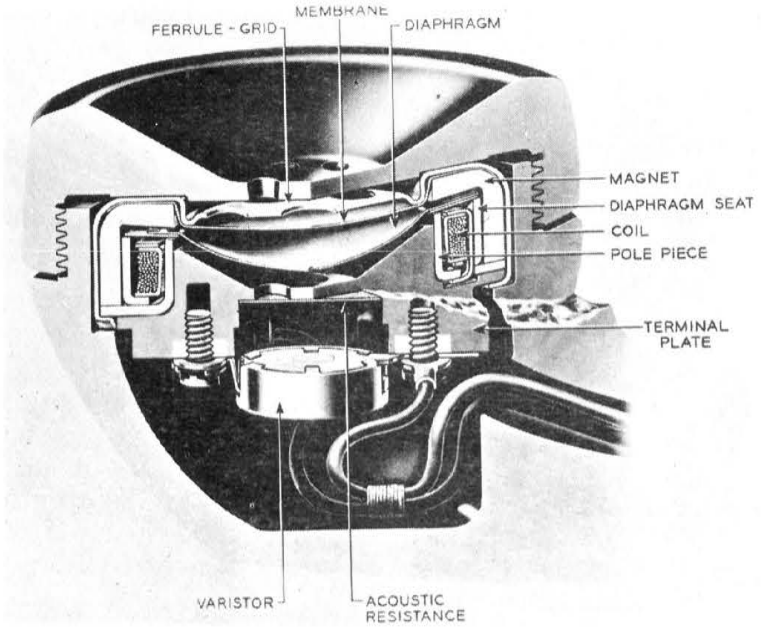

Figure 2-7 Ring-Armature Receiver

TCI Library: www.telephonecollectors.info

The above basic principles also apply to today's receivers, of which a cross section of one of recent design is shown in Figure 2-7. This receiver is known as ring-armature receiver. The diaphram structure is driven like a piston under the influence of the magnetic fields existing in the air-gap across the inner edge of the armature ring.

2.6 THE TELEPHONE SET

A. Local Battery

Figure 2-8 illustrates a local battery telephone circuit. When the magnetic field is established by the fluctuating current through the primary of the induction coil, an alternating current is induced in the secondary of the coil. This current flows through the receiver at the same end of the circuit, giving "sidetone," which will be discussed later in this chapter, to the receiver at the home station. It is also transmitted to the distant station operating the receiver at that point.

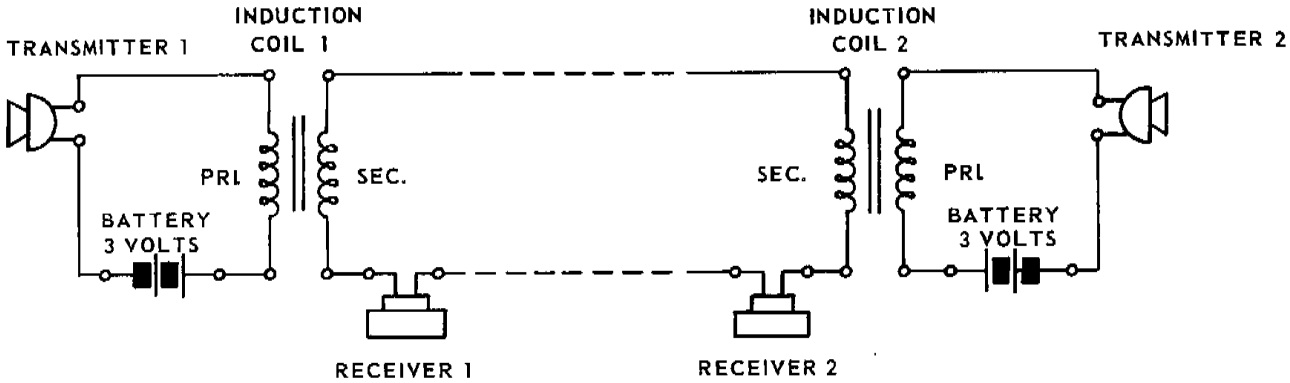

Figure 2-8 Local Battery Telephone Circuit

A local battery system is normally used where the subscribers are reasonably scattered, such as in a rural or farm area or as part of a military communication system.

TCI Library: www.telephonecollectors.info

Like any other communication equipment a local battery telephone system has certain definite advantages and disadvantages. Some of the advantages of the system are:

1. Satisfactory speech transmission is possible over long high resistance lines because there is only alternating current on the line and that of a relatively small value.

2. This means that the wire lines, commonly called the outside plant, can be of a poorer quality and can be constructed more economically and in less time.

3. The switchboard for this system is less complex, less delicate, and less costly.

However, the list of disadvantages for this system far outweighs the advantages. Some of these disadvantages are:

1. The life of the dry cell battery is short. It deteriorates even when standing idle and the voltage varies radically between the time of installation and exhaustion. This means that from the economic viewpoint dry cells are one of the most expensive sources of electrical energy.

2. The batteries must be checked at frequent intervals and exhausted cells replaced. Thus a repairman must visit each subset location no matter how widely scattered or isolated.

3. As the voltage of the battery decreases, the output of the telephone will decrease which will be noticed at the receiving end as a decrease in the volume of the received signal. Consequently, uniform transmission cannot be obtained from all subsets or even from one subset.

4. Some means of signaling the operator or other customers must be incorporated in the subset. This is accomplished by a hand generator or magneto which requires effort on the part of the user and also increases the size of the subset.

TCI Library: www.telephonecollectors.info

5. If the party using the phone does not ring off when through talking, it means more work for the operator since it is then necessary to monitor the circuit to determine when to disconnect. This also tends to reduce the availability and thus the traffic carrying capacity of these circuits.

6. If the switchboard drops are the manual restoring type, this further adds to the operator's work.

7. It can only be used for manual switching systems and not for mechanical switching systems.

B. Common Battery

Figure 2-8 showed a simple telephone connection between two telephone sets, each equipped with a transmitter, receiver, induction coil and its own battery for supplying talking power. In most modern telephone station installations, talking battery is supplied to each subset from a common battery at the telephone central office to which each subscriber line is connected. The simplest subscriber station circuit arrangement under these conditions is shown schematically in Figure 2-9. When the receiver is lifted to close the contacts of the switchhook, and the line is picked up at the central office by an operator or mechanical device, the central office battery is connected in series with the primary winding of the induction coil and the transmitter, and current is sent over the line. Varying currents set up by the transmitter, when it is talked into, add to or modulate the direct current flowing from the central office battery. The varying transmitter currents (which are fundamentally alternating rather than direct) induce a flow of current by transformer action in the secondary of the induction coil through the receiver and causes "sidetone."

The pulsating dc, with its corresponding voltage, variations, are impressed upon transmitter No. 2 and the primary of induction coil No. 2. Transformer action takes place from the primary to the secondary of this induction coil thereby impressing voltage variations upon receiver No. 2 which results in sound in the receiver. The voltage variations across transmitter No. 2 serves no useful purpose.

TCI Library: www.telephonecollectors.info

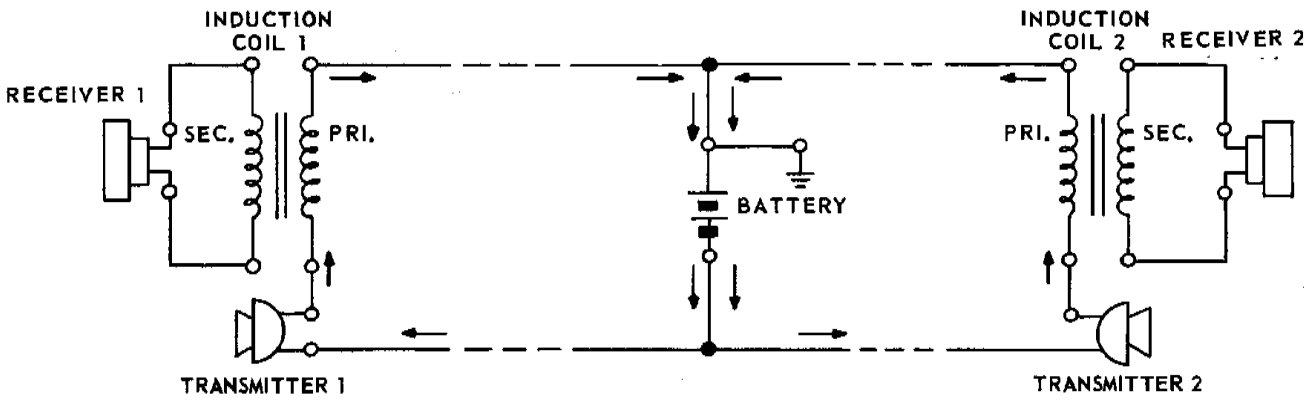

Figure 2-9 Common Battery Telephone System

The common battery system is used where there is a high concentration of customers . Practically all of the telephones in operation today are of the common battery type. This includes all of the telephones associated with the mechanical switching systems.

The use of a centrally located battery overcomes most of the disadvantages listed above for the local-battery system. For example:

1. By furnishing all current from a centrally located battery, the drain on it is such as to warrant the use of storage batteries which are easier and more economical to maintain. Recharging energy for a storage battery costs a great deal less than does the purchase of dry cells - the service requirements being the same.

2. The talking current for the subsets is supplied from the storage batteries which hold their current constant, thus the output of the subset is not affected by battery deterioration.

3. The battery supply being at a central location eliminates the necessity of visiting subsets to test and renew batteries.

TCI Library: www.telephonecollectors.info

4. The switchboard operator, or the mechanical line locating equipment, is signaled by removal of the handset from the switchhook of the subset. This allows direct current to flow in the line which lights a lamp in front of an operator or operates a relay in the mechanical systems. The elimination of the magneto together with the removal of the dry cells means that the subset equipment is smaller and simpler.

5. The operation of the switchhook, when the receiver is removed - or switchhook signaling - not only simplifies the routine for placing calls, but affords a prompt means of indicating completion of the conversation to the operator.

6. A single operator can handle many more lines on a common-battery switchboard than one at a local-battery switchboard and also give better service.

As with any system there are also a few disadvantages connected with the common-battery telephone system.

1. The outside plant must be of higher quality in order to reduce voltage leakage from the lines.

2. Any unbalance in the wire lines of the outside plant will seriously affect quality of transmission and distance over which transmission of speech is possible.

3. The inside plant equipment is far more complex, expensive and delicate; therefore, a longer time is required for installation, and maintenance requirements are increased.

4. The resistance of the loop or line to the subset limits the distance over which transmitter and signaling current may be supplied to a subset.

TCI Library: www.telephonecollectors.info

2.7 SIDETONE

Sidetone is the transmission and reproduction of sounds through a local path from the transmitter to the receiver of the same telephone station. The room noise picked up by the transmitter and reproduced in the receiver through the sidetone path tends to mask the incoming speech. Also the loudness with which the telephone user talks into the transmitter is influenced to a great extent by the loudness of the sidetone. A reduction in sidetone will result in a receiving improvement because of the reduction in the room noise reproduced in the receiver, and a transmitting improvement inasmuch as it influences the telephone user to talk at a normal volume.

Figure 2-10 shows the equivalent circuit of the "antisidetone" feature of a present day 500 type telephone set.

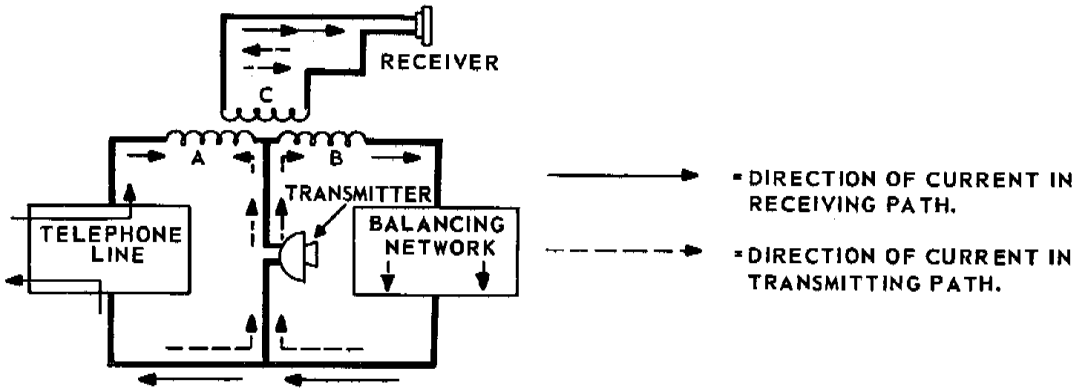

Figure 2-10 Antisidetone Station Circuit

This circuit makes use of a different induction coil having a third winding. The varying currents set up by the transmitter flow through the coil designated "A" and out over the line. This varying current induces a current in the coil designated "C". Another path for the transmitter current is through the coil designated "B" and through the balancing network. This varying current will also induce

TCI Library: www.telephonecollectors.info

a current in the "C" coil but in the opposite direction. If the impedance of the balancing network is adjusted to equal that of the line, then the flux in the "C" coil set up by the "A" and "B" coils will be equal but opposite and therefore cancel each other out. Sidetone would not be present in the receiver.

When receiving, current coming in from the distant transmitter passes through the "A" and "B" coils in the same direction and is induced into the receiver circuit through coil "C". This circuit is no more efficient than the sidetone circuit although it may seem so, principally because in receiving, the listener is not distracted by extraneous noises coming from his own transmitter.

2.8 DIAL

In a manual telephone system the subscriber tells the number he desires to an operator who either selects the number for him and connects his line to the line of that number, or, in larger systems, connects the line to a trunk to a distant office and repeats the number to another operator who selects the line for him. In automatic systems, the sequence of operations is somewhat similar but the operations are performed by electromechanical switches.

Since an electromechanical switch cannot respond to the voice of the subscriber as an operator can, it is necessary to provide a means by which the subscriber can convey to the switches what number he wants.

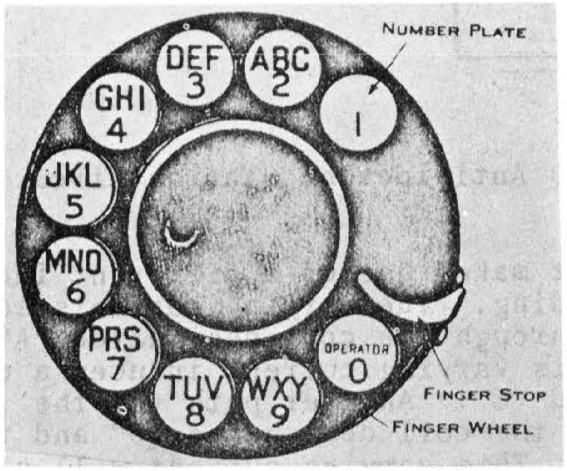

Figure 2-11 Telephone Dial (Front)

TCI Library: www.telephonecollectors.info

This mechanism is the "dial" (Figures 2-11 and 2-12). Most people are now familiar with the operation of the dial. The customer puts his finger in the hole of the dial in which appears the letter or figure which he wishes, pulls the rotating disc around until his finger strikes the stop and lets go.

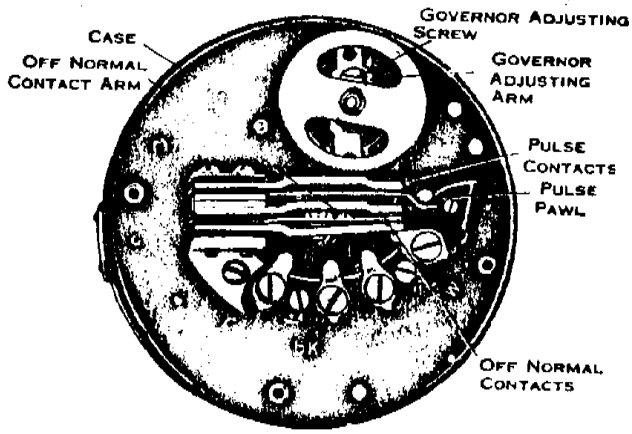

Figure 2-12 Telephone Dial (Rear)

A spring rotates the disc back to its normal position and in doing so simply opens and closes the circuit of the customer's line the number of times indicated by the number under the hole into which the customer puts his finger. It must be remembered that that is all the dial does -- it opens and closes the circuit of the customer's line a certain number of times. A little governor in the back of the dial controls the speed of the rotating disc and assures that the opening and closing of the circuit is uniform and regular. By performing this operation the proper number of times, the customer relates to the relays or switches the central office in which the desired line is located and the number of that line. It should be noted that rotating the disc with the finger in the hole marked "zero" opens and closes the circuit ten times.

TCI Library: www.telephonecollectors.info

If the customer wishes to reach the operator, the dial in restoring to normal will cause the pulse contacts to open and close ten times. The opening and clsoing of the dial pulse contacts will cause the "line pulsing relay" in the central office to release and operate ten times. In releasing and operating ten times the "line pulsing relay" conveys this information to the "pulse counting circuit" or "switch mechanism" and the automatic equipment functions to establish a connection to the zero operator. In a similar manner other call combinations can be established.

In order to eleiminate the dial clicks in the receiver when the dial is restoring to normal a pair of off-normal contacts in the dial break and the receiver is out of the circuit. After dialing is completed the off-normal contacts restore the circuit to normal.

The average customers dial is designed to operate at about 10 pulses per second. The circuit of the 500D type dial telephone set is shown in Figure 2-13. The 500-type set includes a mechanical dial with a precision pulsing mechanism,

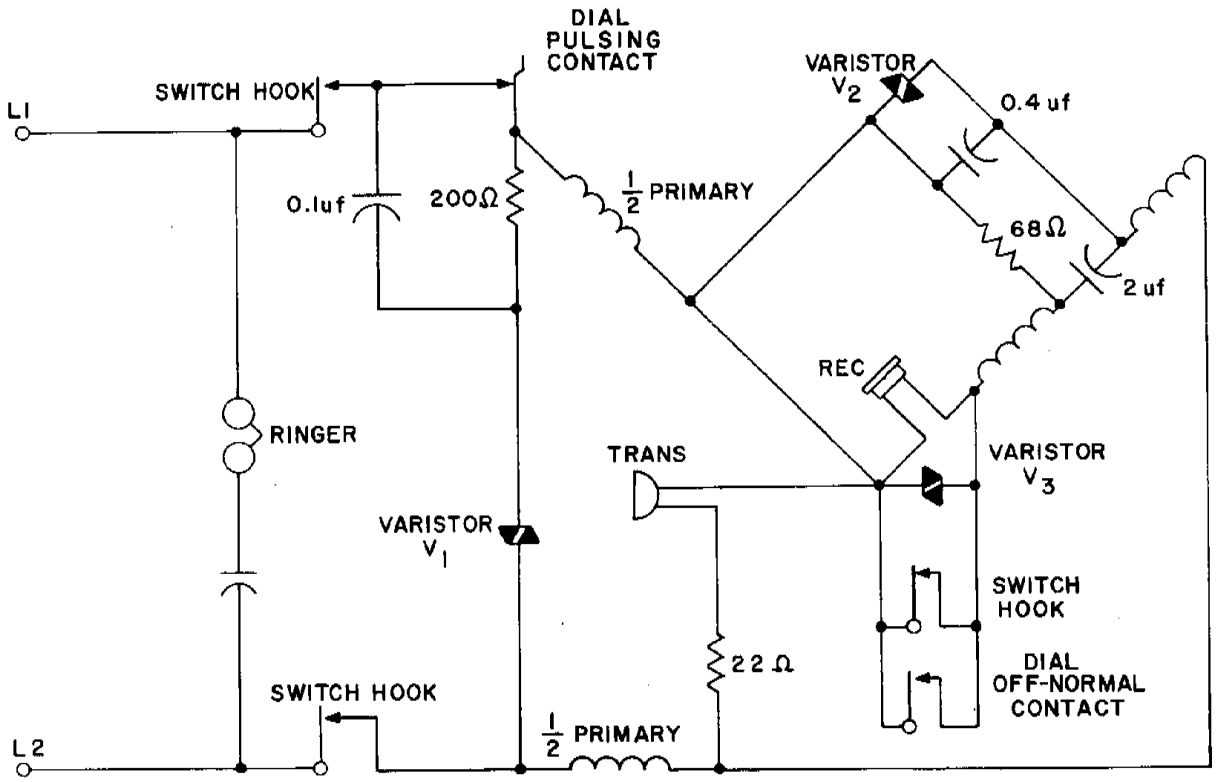

FIGURE 2-13 - Complete Circuit of Type 500D Telephone Set

TCI Library: www.telephonecollectors.info

and it is self adjusting in its speech transmission and sidetone characteristics to match the length of subscriber line on which it is used. Automatic control of transmission features is accomplished through the variable characteristics of varistors V1 and V2 shown in Figure 2-13. Both the ac and dc resistance of these varistors depends on the direct current passing through them and the magnitude of this current is determined by the resistance (length) of the subscriber loop. These circuit elements adjust the speech transmission and sidetone characteristics of the subscriber set as required for any type of telephone connection. The 500-type set also has improved ringing features, compared with earlier sets. A 500-type telephone set with the letters and numbers appearing outside the dial is shown in Figure 2-14.

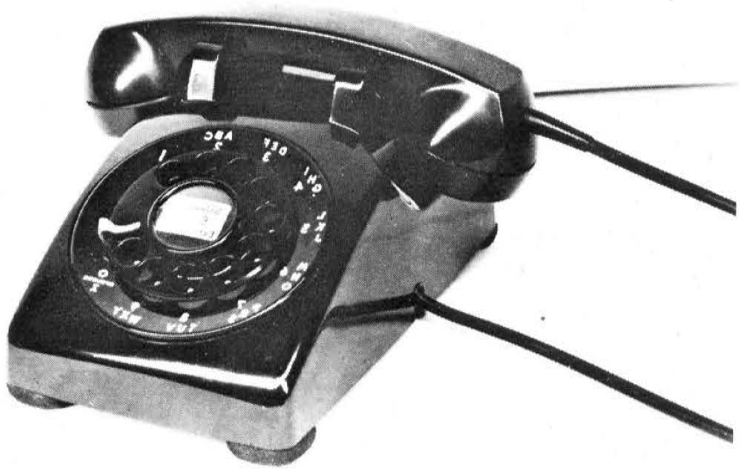

2.9 TOUCH-TONE

TOUCH-TONE dialing offers to the customer speed and convenience through the use of a "pushbutton" rather than the rotary type dial. Consequently, the telephone set contains a set of "pushbuttons" rather than the dial of Figure 2-11. Multifrequency tones are generated by depressing the pushbuttons of the subset instead of direct current pulses being generated by the pulse contacts of the dial.

The subset contains a double frequency transistorized oscillator which is powered by the central office battery. Depressing any pushbutton will generate two frequencies; one from a high group and one from a low group. Each group consists of four frequencies as follows; low group - 697, 770, 852 and 941 cps, high group - 1209, 1336, 1477 and 1633 cps.

TCI Library: www.telephonecollectors.info

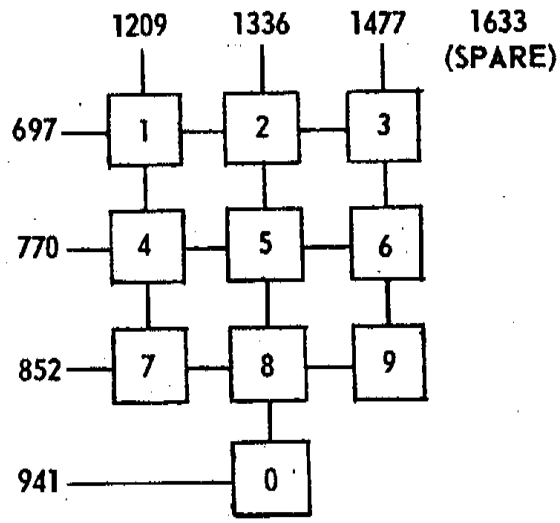

Figure 2-15 TOUCH-TONE Dialing Freq Combinations

The two frequencies generated will indicate a digit from 0 to 9 and two special service tones as shown in Figure 2-15. The combination of one low group frequency and one high group frequency gives 16 possible signal combinations. The extra four signals are for use with the special 16 push-button phones.

Depressing any pushbutton also operates the "Common Switch" which reduces sidetone to the receiver, opens the transmitter path and applies bias voltage to the transistorized oscillator.

2.10 RINGERS

The telephone ringer or "bell" is used to indicate the presence of an incoming call. Three types of ringers are in use today; the unbiased ringer, the biased ringer, and the harmonic ringer.

Unbiased ringers are intended for use on alternating current only. When alternating current passes thru the electromagnets, the magnetism set up by the permanent magnet is strengthened in one coil and diminished or overcome in the other on the first half cycle. The armature now tilts toward the core having the strongest magnetism and the clapper ball strikes one gong. As the current is reversed on the half cycle, the other coil has the greater attraction and the clapper ball strikes the other gong.

TCI Library: www.telephonecollectors.info

The biased ringer is used in all cases where superimposed current (direct current superimposed on alternating current) is used for ringing. The biased ringer is constructed like the unbiased ringer except that it is equipped with a biasing spring to hold one end of the armature against the respective magnet core. See Figure 2-16. A pulse of the proper polarity will overcome the pull of the spring and pull the armature against the other core, ringing first one gong and then the other as the armature is released and returned to the biased side by the biasing spring. Pulses of the opposite polarity would, of course, have no effect on the ringer. This makes it possible to ring either of two ringers on one wire by choosing the polarity of pulses to be sent out over the line.

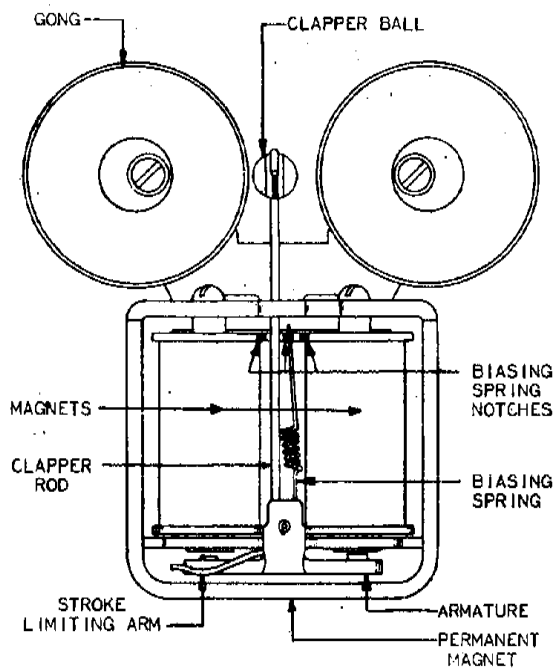

Figure 2-16 Biased Ringer

TCI Library: www.telephonecollectors.info

The harmonic ringer resembles the unbiased ringer in general construction. However, the armature of the harmonic ringer is secured to a stiff steel spring rigidly mounted between the two halves of the core yoke, instead of being pivoted by trunion screws. Thus, the armature and tapper are held normally in a median position. Each ringer is mechanically tuned so that it responds only to ac ringing of one frequency. The natural period of vibration is determined by the strength of the spring and the weight of the gong tapper. The four ringing current frequencies are: 16-2/3, 33-1/3, 50 and 66-2/3 cycles per second.

2.11 RINGING MULTIPLE-PARTY LINES

A. 2-Party Selective Ringing

In 2-party selective ringing, the ringers of the two parties are connected one from each side of the line to ground, instead of across the line as in individual lines. This is shown schematically in Figure 2-17, in which the subscriber stations, other than just the ringer portions, do not appear. Likewise, the tripping circuit is not shown, and the ringing circuit is shown only symbolically. Actually, the ringer is essentially the same as already indicated, but with a means for applying the ringing

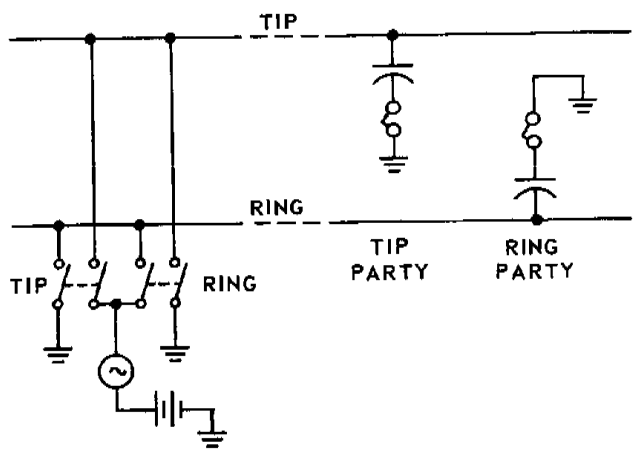

Figure 2-17 2-Party Selective Ringing

TCI Library: www.telephonecollectors.info

voltage to either side of the line at will, ground being applied to the opposite side in either case. If ringing voltage is applied to the tip side of the line, only the tip-party ringer will operate, as the ring-party ringer is then grounded on both sides. When ringing voltage is applied to the ring side of the line, the opposite occurs.

B. 4-Party Full Selective Relay System

The first successful 4-party full-selective ringing was accomplished by having a relay in series with a capacitor bridged across the line at each party's station. Operation of the relay applied ground to the ringer, as shown in Figure 2-18. In this diagram, two degrees of selection in the ringing are obtained, first by applying the ringing voltage to either tip or ring wire, as in the case of 2-party ringing, and further by changing the polarity of the battery current which is superimposed on the alternating current from the ringing machine. Thus four selective combinations are obtained, positive or negative direct current with alternating current on the tip wire, and positive or negative direct current with alternating current on the ring wire.

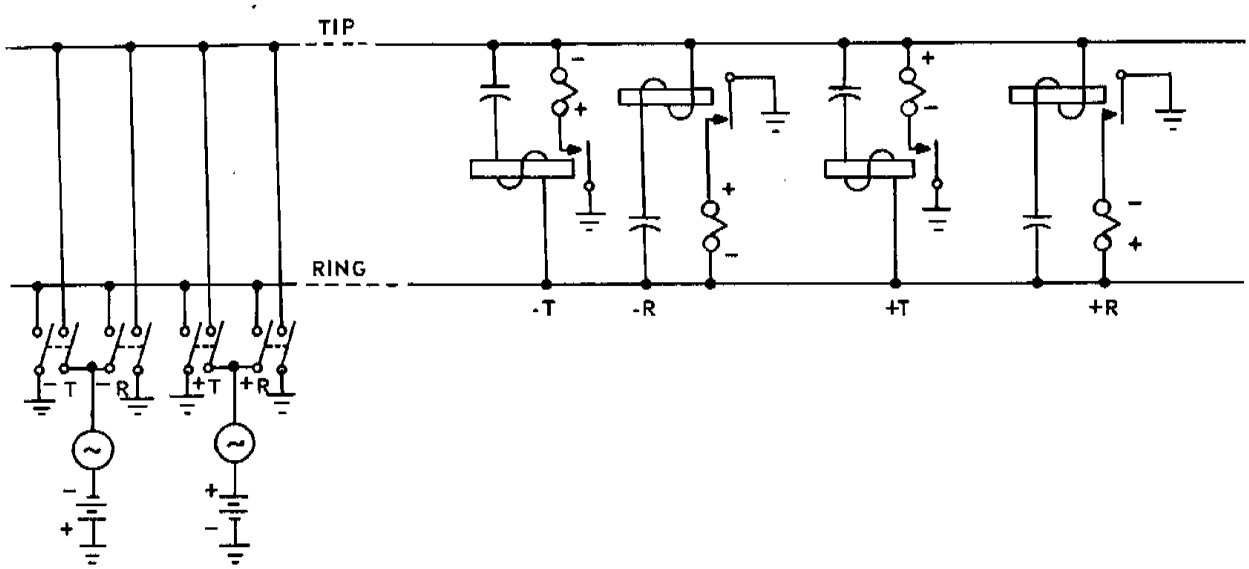

Figure 2-18 4-Party Full Selective Ringing Using Relays

TCI Library: www.telephonecollectors.info

When any one of the four combinations is applied (by throwing any one of the four switches in the diagram) all four of the relays operate, as there is no directional or polarity sense in the operation of the relays. Ground is thus applied to all four ringers, but only two of these are connected to the side of the line corresponding to the one switch thrown, thus eliminating the other two ringers. Which one of the two possible ringers operates, is determined by the polarity of the direct current and the bias of the ringer. The bias is obtained mechanically by means of a spring which pulls one end of the armature of the ringer to a stop position where it is nearly in contact with one of the cores of the ringer winding. Of the two ringers connected to the tip wire, one is biased to the side which requires positive direct current to overcome the pull of the spring (negative direct current only holds the armature more firmly against the core), and the other to the side which requires negative direct current. The two ringers connected to the ring wire are similarly biased for positive and negative operation. Thus only one ringer can operate when one of the switches shown in the diagram of Figure 2-18 is closed.

C. 8-Party Semiselective Coded Ringing

8-party semiselective ringing is obtained by doubling up on a 4-party full-selective arrangement. Two ringers operate for each of the four combinations of ringing. The final step in selection is achieved by code, for instance, one ring for one of the two selected ringers and two rings for the other.

D. Inverted Relay Biased Bell System

In order to overcome the difficulties experienced with ground potentials which seriously interfered with the operation of Relays in the Central Office, as well as causing substation "Cross-Ringing" or failure to ring, the position of the ringer and the relay was reversed to obtain the Inverted Relay Biased Bell System as shown in Figure 2-19.

TCI Library: www.telephonecollectors.info

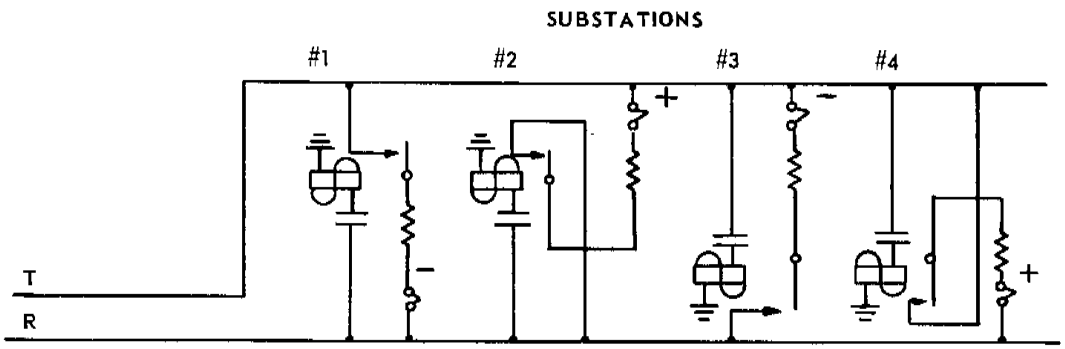

Figure 2-19 Inverted Relay Biased Bell System

Two (2) substation relay windings are connected from each side of the customer line to ground, each relay in series with a capacitor. When pulsating ringing current is applied to the called customer line, one side of the line is grounded. As a result, only two(2) substation relays operate - those two having their windings connected to the ungrounded side of the line. One of the two substation ringers, bridged across the customer line by operation of the two substation relays, is selected by applying pulsating ringing current of the proper polarity to the line.

When positive ringing pulses are applied to the tip conductor of the called customer line and ringing ground to the ring conductor, Substation #3 and #4 relays operate, bridging their respective ringers across the subscriber line. Only Substation #4 ringer operates as it is biased for positive ringing pulses.

E. 4-Party Full Selective Ringing Using Harmonic Ringers

In 4-party full selective harmonic ringing, each substation ringer is bridged across the customer's line, in series with a capacitor. A particular substation is signaled by the selection of one out of four ac ringing current frequencies: 16-2/3, 33-1/3, 50 or 66-2/3 cycles per second applied to the called customer's line. Only the ringer tuned to the frequency selected will operate.

TCI Library: www.telephonecollectors.info

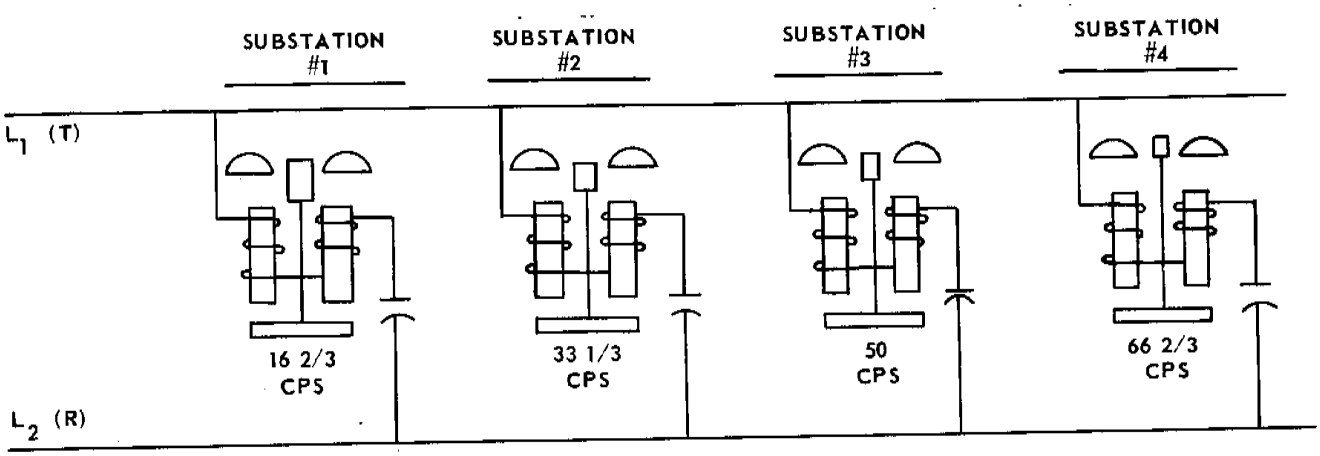

Figure 2-20 4-Party Full Selective Ringing Using Harmonic Ringers

8-Party full selective ringing is then possible with the use of harmonic ringers. Four substation ringers are connected from one side of the line, and the remaining four ringers from the other side of the line, each to ground and each through a capacitor. Any one of the eight substations may be signaled, with the exclustion of all others, by applying ac ringing current of the correct frequency to the side of the customers line, tip or ring, to which that substation ringer is connected, utilizing ground return.

The harmonic ringer is not used too frequently in the Bell System. It is inconvenient to manufacture four different types of the harmonic ringers. It is simpler to manufacture a ringer with the biasing spring that can be positioned to operate on positive superimposed ringing, negative superimposed ringing or ac ringing current alone, by neutralizing the biasing spring.

F. 4-Party Full Selective Ringing Using 3-Element Cold-Cathode Tubes

The present standard method of 4-party full selective ringing is one which employs 3-element cold-cathode tubes instead of the relay and capacitor. These are arranged as indicated in Figure 2-22. The tubes have a control anode and cathode which form a "control gap." This breaks down, or ionizes, when a potential of

TCI Library: www.telephonecollectors.info

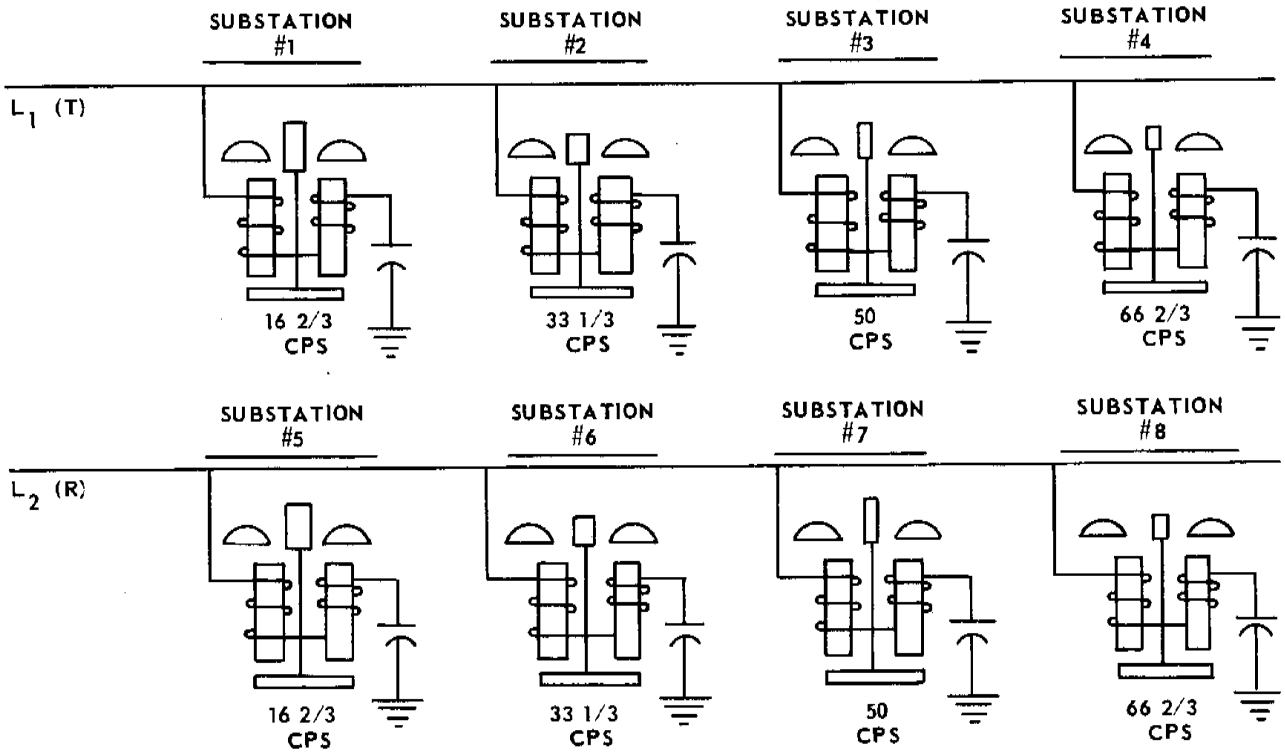

Figure 2-21 8-Party Full Selective Ringing Using Harmonic Ringers

about 70 volts (of either polarity) is applied across it. Ionization of the gas in the tube permits current conduction to occur in the main gap, provided the third element, the main anode, is positive with respect to the cathode. Current in the control gap is limited by a series resistor to about one microampere, but the main gap can handle currents as high as 30 milliamperes. Referring to Figure 2-22, it will be noted that when any one of the four switches is thrown, the control gaps of two of the tubes will breakdown. The other two control gaps cannot breakdown because both sides of the gaps are at ground potential. For instance, if the -T switch is thrown, the control gaps of the tubes for the -T and +T parties will breakdown. The superimposed direct current has the correct

TCI Library: www.telephonecollectors.info

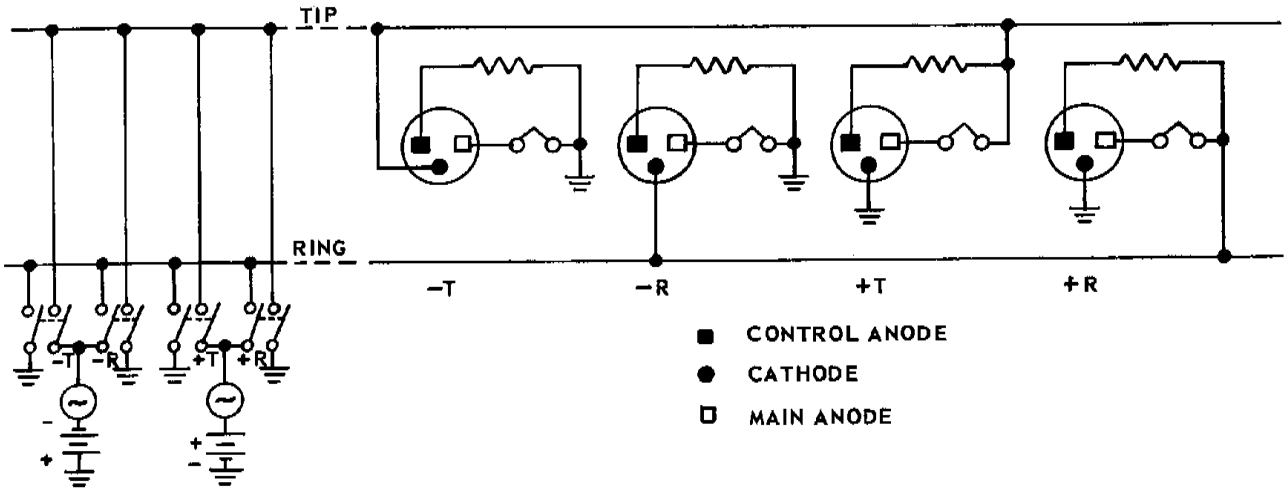

Figure 2-22 4-Party Selective Ringing Using 3-Element Cold-Cathode Tubes

polarity to cause conduction of ringing current in the main gap of the -T party, but the wrong polarity for that of the +T party. Hence the ringer of the -T party is the only one of the four which operates. In the same way, throwing any one of the other three switches operates only the one corresponding ringer.

The tube subset has several advantages over the relay type. With the relay type subset, ringing current flows through 2 ringers and 4 relays. In the case of the inverted relay biased system, ringing current flows through 2 relays and 1 ringer. However, ringing current flows through only 1 ringer in the tube-type subset since the electron tube will pass current in only one direction. This arrangement reduced the voltage drop due to line resistance, and permits an extended ringing range for 4-Party Service.

The electron tube also eliminates bell tapping and false ringing sometimes caused by dialing or switching operations.

TCI Library: www.telephonecollectors.info

In addition, the tube may be mounted in any position, while the relay must be mounted vertically to insure proper operation. Adjustment of the relay is also required to insure proper functioning of the relay type subset.

2.12 RINGING AND TRIPPING CIRCUITS

A simplified schematic of a ringing machine appears in Figure 2-23, which shows ringing and tripping circuits applied to an individual line, that is, to a subscriber line to which only one station is connected. It will be noticed that the commutator which supplies ringing current to the line is divided into two segments which correspond, respectively, to a ringing interval of about two seconds, followed by a silent interval of four seconds. During both ringing and silent intervals, direct current from a 45-volt battery is supplied. Alternating current is supplied only during the ringing interval.

Ringing is accomplished by closure of switch contacts, or, in dial offices, relay contacts as shown at the point marked C in the diagram. This causes the relay marked A to operate and relay B remaining unoperated since its winding is short-circuited. Operation of relay A applies ground to one side of the customer loop and the ringing commutator to the other side. Alternating current flows through the ringer at the customer station set during the ringing interval, and to ground back at the central office, thereby ringing the bell. As long as the customer does not lift the handset from its mounting, there is no dc path in the customer circuit.

The purpose of the tripping relay is to insure that the called subscriber cannot be "rung in the ear," whether he answers the call during the ringing interval or the silent interval. In other words, operation of the tripping relay is an indication that the customer has removed the handset from its mounting, and is presumably ready for conversation. The tripping relay is so designed that it cannot operate on alternating current alone, that is, as long as the direct current path is open. Removal of the handset closes the direct current path through the switch-hook, transmitter, and one induction coil winding at the subscriber station. The relay will operate firmly on direct current alone if the call is answered during the silent interval. If the call is answered during the

TCI Library: www.telephonecollectors.info

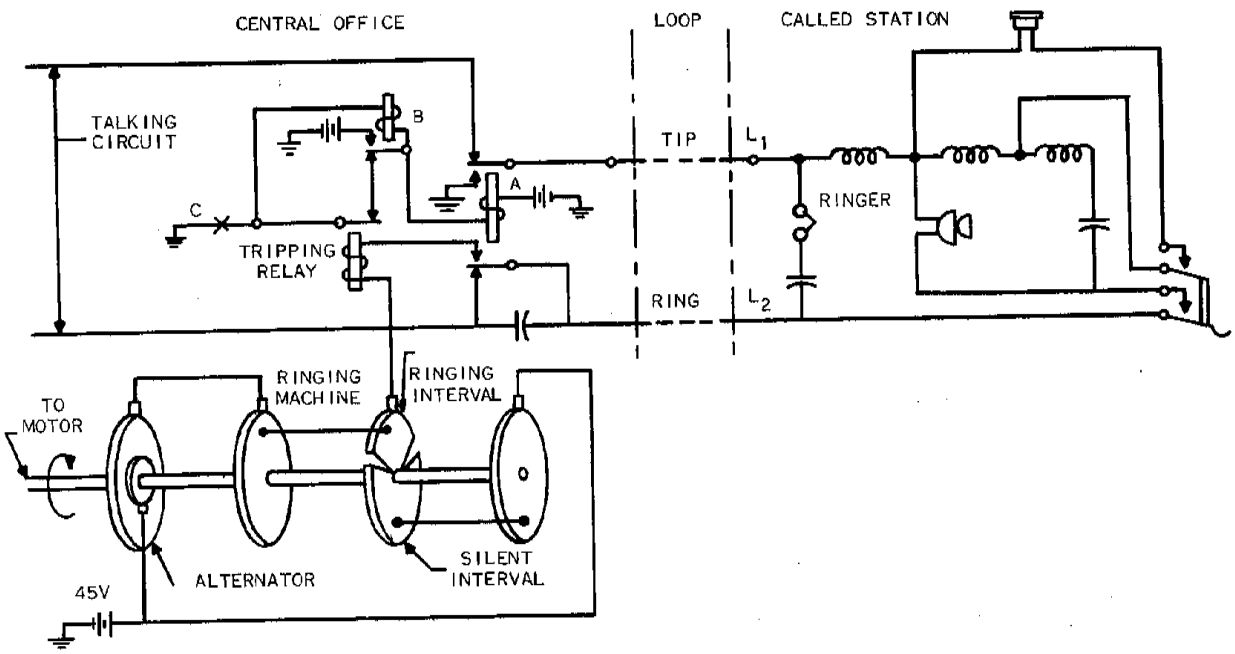

Figure 2-23 Superimposed Ringing and Tripping Circuits

ringing interval when both alternating and direct currents flow through the winding of the tripping relay, the latter will tend to operate intermittently. However, at the first operation of the tripping relay, the short-circuit is removed from the winding of relay B, which operates and locks up to battery through its contacts, thereby shunting down relay A. This, in turn, restores the line to the talking condition before the called customer can raise the handset to his ear.

A condenser is shown in Figure 2-23 near the contacts of relay A. When the circuit is in the talking condition, with relay A nonoperated, the capacitor is short-circuited. In the ringing condition, relay A removes the short-circuit from the capacitor, which allows a small amount of ringing current to flow back to the calling customer, thus permitting him to hear the so-called "audible ring."

TCI Library: www.telephonecollectors.info

CHAPTER 3

LOCAL MANUAL SYSTEMS

3.1 THE MANUAL SWITCHBOARD

A. History

On January 28, 1878, two years after Alexander Graham Bell was awarded a patent on his primitive telephone, the world's first commercial telephone exchange opened for business in New Haven, Connecticut. This enterprise was called the District Telephone Company of New Haven. It was a small beginning. There were only 21 subscribers, served by 8 lines with interconnecting service provided by the operation of two rotary switches. This was the first switchboard, a model of which is shown in Figure 3-1.

As more and more subscribers were added, switchboard designs had to be altered to enable the interconnecting of the steadily increasing number of subscriber lines. As local central office areas began to be established, each devoted to the interconnecting of a group of subscriber lines terminated on its switchboard, further alterations were required. It soon became necessary to enable a subscriber whose line terminated in one central office to be connected to a subscriber whose line terminated in another central office. With the ever increasing growth of subscribers, improvements in local central office switchboard designs were constantly made until they evolved into the manual switchboards described in this chapter.

B. Basic Switchboard Functions

A telephone switchboard is defined as the unit of central office equipment which requires an operator to perform the switching function necessary to provide the requested telephone service. In a manual office operators are required to switch all calls from one subscriber to another subscriber whose line is terminated in the same central office. Operators are also required to terminate calls received from another central office to any of its subscribers. Further, operators must also be able to connect any subscriber to a line terminated in another central office which will in turn connect him to one of the subscribers in that office or to another switchboard elsewhere.

TCI Library: www.telephonecollectors.info

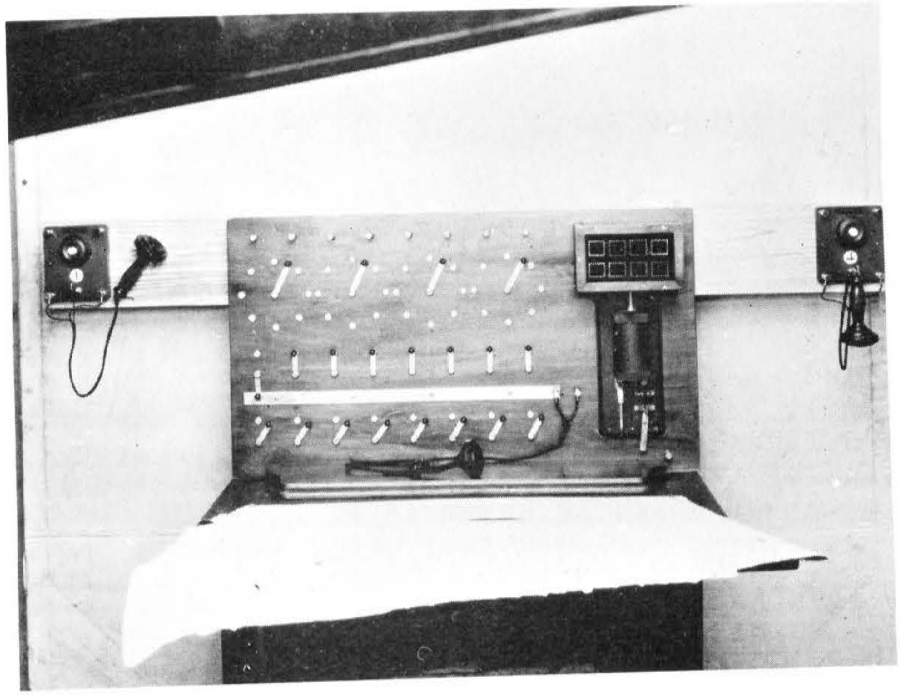

Figure 3-1 Model of First Switchboard

Thus a local telephone switchboard is designed to switch originating and terminating calls from and to subscribers in the local central office area. Originating calls are those made by subscribers which are answered by operators and completed to other subscribers in the same office or forwarded for completion in another office. Terminating calls are those incoming from other offices and completed by operators to subscribers in the local office.

The basic tool available to the switchboard operator and which she uses to establish any of the above connections is the cord circuit. Actually, each switchboard is equipped with a number of these cord circuits in order to enable the operator to establish the requested call connections while other previously established calls are still in the "talking" stage.

Each of these cord circuits is essentially a telephone line "bridge" with a plug at each end and a key in the middle for connection to the operator's telephone circuit. Since

TCI Library: www.telephonecollectors.info

each subscriber's telephone line is terminated in a jack mounted in the upright portion of the switchboard (facing the operator), the operator can establish a talking path between any two such subscribers by inserting the cord circuit plugs into the two subscriber line jacks and thus establish a connecting "bridge" between the two lines.

Before this can be accomplished however, the operator must be able to detect a subscriber's request for telephone service and then determine the nature of the call. If it is a call to another subscriber in the same central office, she locates the called subscriber's line jack, rings the subscriber and waits until she detects an answer. When the conversation between the two subscribers has terminated which she detects by means of the lit cord circuit lamps, she removes both plugs from the subscriber's jacks. The cord circuit is now available for the subsequent connection of any other two subscriber lines. Each switchboard contains certain basic equipment necessary for the completion of subscribers calls. This is described in paragraph 3.2.

Switchboards are usually referred to as local or toll, according to the type of traffic handled. The local switchboard is designed for operators to switch calls between subscribers in the same office, forward calls to another office or to complete incoming calls received from other offices. The toll switchboard is designed for switching calls between local offices and calls to and from other toll switchboards. In the more populated areas local and toll switchboards are generally separate units although they may be located in the same building. In smaller areas they may be separate lineups in the same operating room or even part of the same lineup. When part of the same lineup, the switchboard is sometimes arranged so that operators can switch both local and toll calls. This latter arrangement is called a combined local and toll board or a single channel switchboard. Toll Switchboards will be discussed in a later chapter.

3.2 SWITCHBOARD EQUIPMENT

Figure 3-2 shows the front equipment and keyshelf of a typical local manual switchboard. In the figure, the keys, lamps and plugs for 17 cord circuits are shown mounted on the keyshelf. The relays and equipment associated with these keys, lamps, and plugs are not shown in the figure, but are mounted on a relay rack behind the keyshelf. The figure shows

TCI Library: www.telephonecollectors.info

the lower portion of the front equipment which contains the subscriber line answering jacks and associated line lamps. Above these jacks and lamps are the outgoing (O.G.T.) multiple jacks and in the top portion, the subscriber multiple jacks are shown.

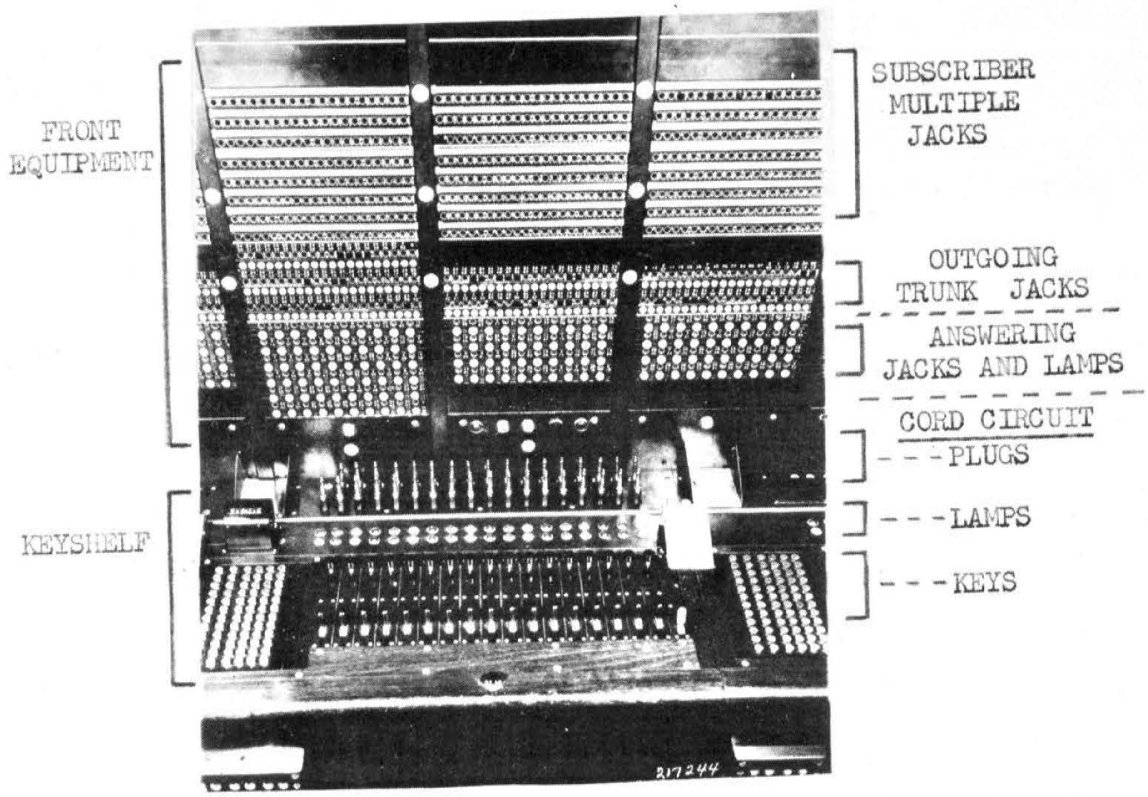

Figure 3-2 Front View of a Typical Manual Switchboard

A. Upper and Lower Units

The illustration shows only one switchboard position (for one operator). Usually three such positions are combined into one switchboard section. The front equipment for all three positions is known as the upper unit. This consists of the framework necessary for mounting the various jacks and lamps described above, the shelf and brackets for supporting the multiple cables, the answering jack cables and other miscellaneous switchboard cable. There is one lower unit for each position, and this consists of the key-shelf and framework for the cord circuits and other apparatus required by one operator.

TCI Library: www.telephonecollectors.info

B. Subscriber Answering Jacks

The subscriber answering jacks are not assigned to the subscriber's lines in numerical sequence but are assigned so as to equalize the originating traffic (the request for telephone service) among the various operators. Each operator, therefore, is responsible for a proportionate share of the traffic load.

C. Subscriber Multiple Jacks

The subscribers multiple jacks are used by the operators to complete connections to subscriber lines whose answering jacks terminate in other positions. Except in very small offices, each line appears in parallel (multiple) at other jack locations at repeated intervals along the various switchboard sections. This enables each operator to connect the calling subscriber (whose answering jack appears in the answering jack portion of her position) to the called subscriber (whose jacks appear in the multiple jack portion within her reach). Normally each operator is able to reach all the multiple jacks in her position, and the positions on either side. Thus, the principle of the multiple jacks switchboard enables one operator to answer any one of about 150 lines and connect it to any one of about 10,000 lines. A multiple jack switchboard is shown diagramatically in Figure 3-3.

D. A Subscriber's Call

If a calling subscriber, whose number is 109 in Figure 3-3, calls a party whose number is 567, the calling subscriber's lamp in position 1, that is associated with the answering jack for line 109, indicates a request for service. The operator, upon seeing the lamp light up, then plugs one end of the cord circuit into the associated jack (A). After finding out that the subscriber desires number 567, the operator then inserts the other plug of the cord circuit into the multiple jack (B) for line number 567 located in position 2.

On the other hand, if subscriber 567 called subscriber 109, the operator at position 3 inserts the cord circuit plug into the jack marked (C) in Figure 3-3 and then inserts the other cord circuit plug into the multiple line jack marked (D) in position 4.

Each operator guards against plugging into a busy line. If she hears a "click" in her receiver when she starts to plug into a jack the fact that the line is in use somewhere else in the multiple is indicated.

TCI Library: www.telephonecollectors.info

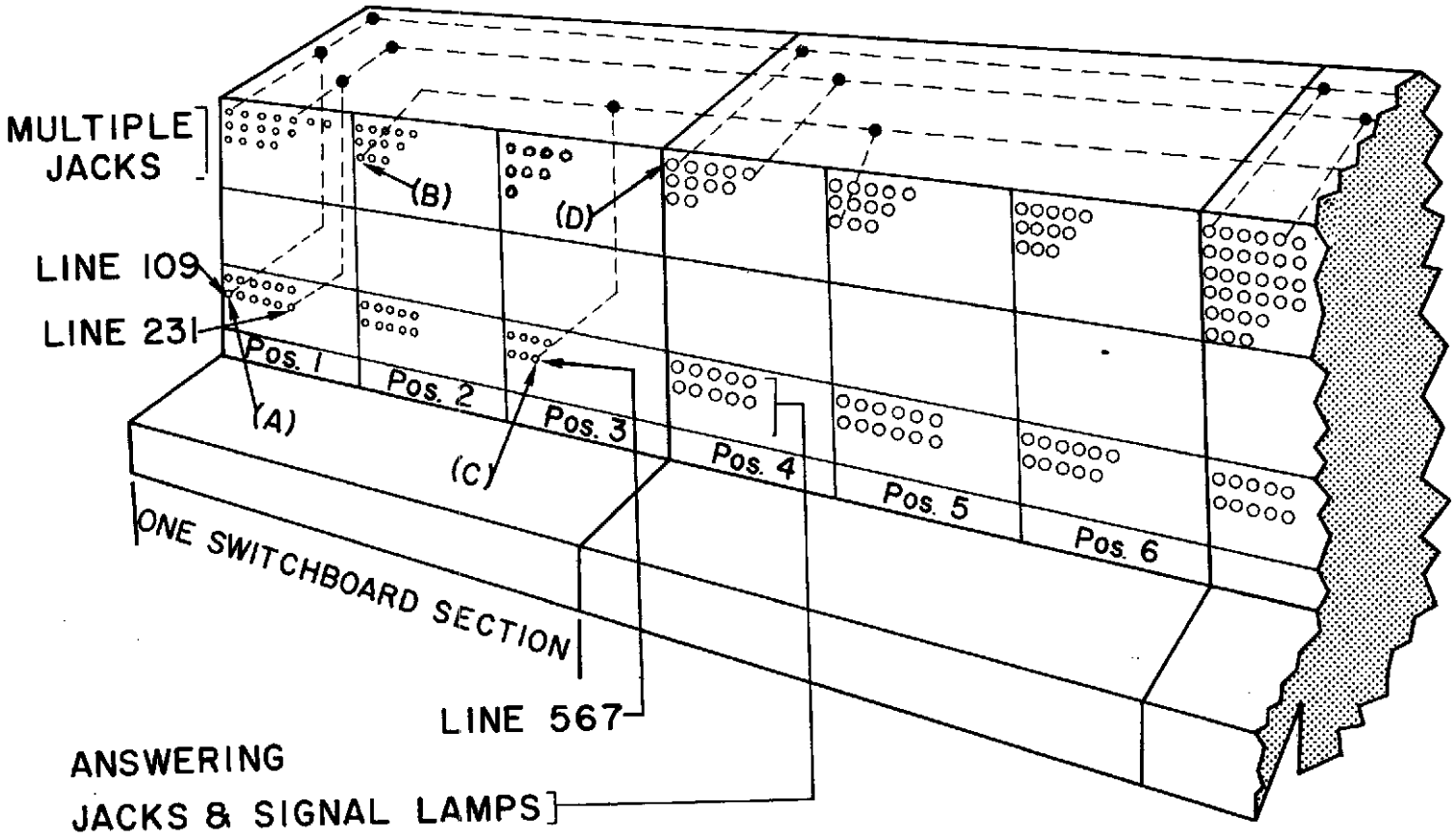

Figure 3-3 An example of a Multiple Jack Arrangement

TCI Library: www.telephonecollectors.info

3.3 SWITCHBOARD CIRCUITS

A. Subscriber Line Circuit

The evolution of the subscribers line circuit is illustrated in Figure 3-4. One of the circuits used in the early manual switchboards was the cut-off jack line circuit, Figure 3-4(a). When the subscriber removed his handset a circuit across the T and R leads was closed and the lamp lit. When the operator plugged into the jack with the answering cord, the plug physically opened the lamp circuit and at the same time connected the subscriber to the operator. The difficulty here was that different subscribers required different sizes of lamps depending upon the resistance of the subscribers loop due to varying lengths of line. Also, the jack cut-off springs were hard to adjust. An improvement was the line relay circuit, shown in Figure 3-4(b). The lamp was now replaced with a high resistance relay which operated regardless of the amount of loop resistance. The lamp circuit, controlled by the line relay, was office contained and in addition, all lamps were now of the same size. There was still one difficulty, which was, the jack itself. The jack was rather large and required the plug on the cord to physically break the circuit by the action of the plug in the jack. This was overcome by use of the line circuit with line and cut-off relays, shown in Figure 3-4(c).

Figure 3-4(c) shows that when the operator plugs into the jack of this circuit, the sleeve of the plug puts battery on the sleeve of the jack. This causes the cut-off relay to operate, releasing the line relay and extinguishing the lamp. There are fewer parts to this jack and it is smaller; since there is no required physical movement in the jack, the jacks can be located closer together, thus allowing more jacks to be placed in any switchboard position. There is another advantage to this circuit. When the operator plugs into this circuit she places battery on the sleeve of the jack. In a multiple switchboard this means that there is battery on the sleeve of every multiple of this jack. This allows other operators to test for a "busy" condition of a subscriber line. If a subscriber line is "busy," the operator will hear a click in her headset when she touches the tip of a cord circuit to the sleeve of the jack.

B. Cord Circuit

The cord circuit permits the operator to talk to subscribers, interconnect lines and trunks, ring the subscriber's telephone, supervise the connection and perform a number of other duties. It also provides talking battery for the subscribers.

TCI Library: www.telephonecollectors.info

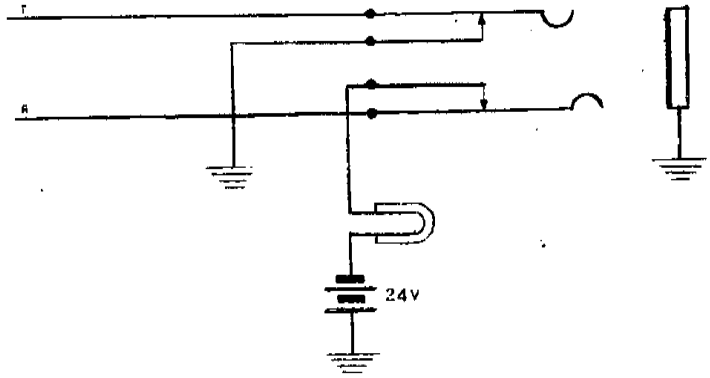

Figure 3-4(a) Cut-Off Jack Line Circuit

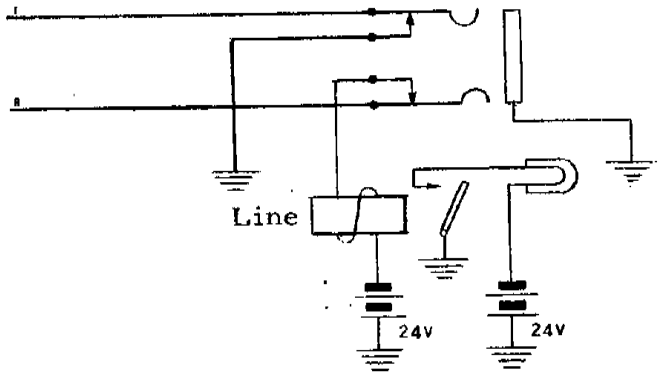

Figure 3-4(b) Line Relay Circuit

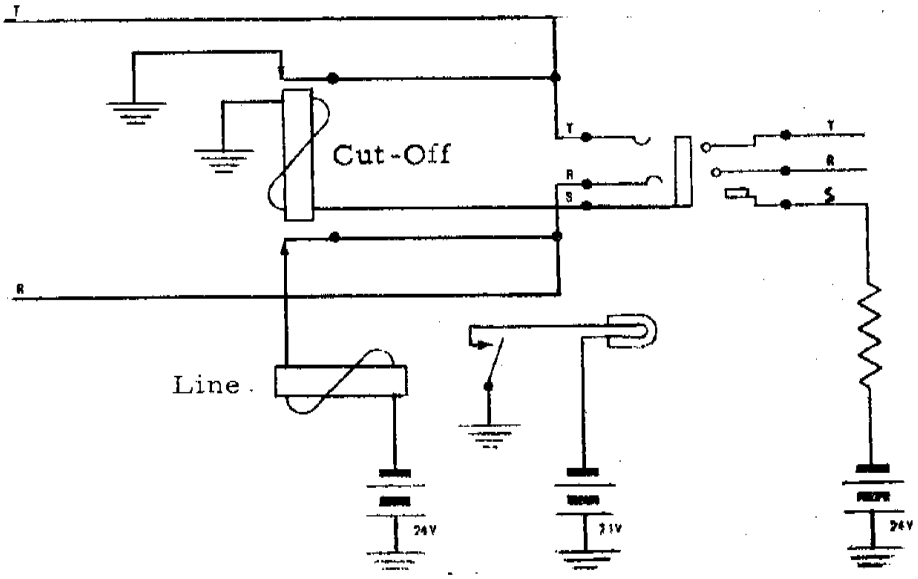

Figure 3-4(c) Line Circuit With Line and Cut-Off Relay

TCI Library: www.telephonecollectors.info

A cord and its associated circuits is illustrated in Figure 3-5. This figure shows a telephone connection between two stations terminating at the same central office. Here the telephone circuit at each station is normally open when the receiver is on the hook, with the exception of the ringer which is bridged across the circuit in series with a capacitor. It is a function of the capacitor to close the ringing circuit for alternating current and open in so far as the subscriber's signaling the operator is concerned and is closed through the ringer in so far as the operator's ringing the subscriber is concerned. Thus, the circuit is in such condition that the subscriber may call the operator or the operator may call the subscriber.

The subscriber calls the operator by merely closing the line, which is accomplished by removing the receiver from the hook. The operator answers the call by inserting plug P_1 , into the answering jack associated with the lighted lamp and to which the line of the calling party is connected.

The operator learns the calling subscriber's wishes by connecting her telephone set to the cord circuit by means of the key K_1 . She talks over the two heavy conductors of the cord circuit through the windings of the repeating coil, which by means of transformer action induces current into the other windings of the same coil. This current flows back over the calling subscriber's line and induces a current in the secondary of the induction coil, which in turn, flows through the telephone receiver.

TCI Library: www.telephonecollectors.info

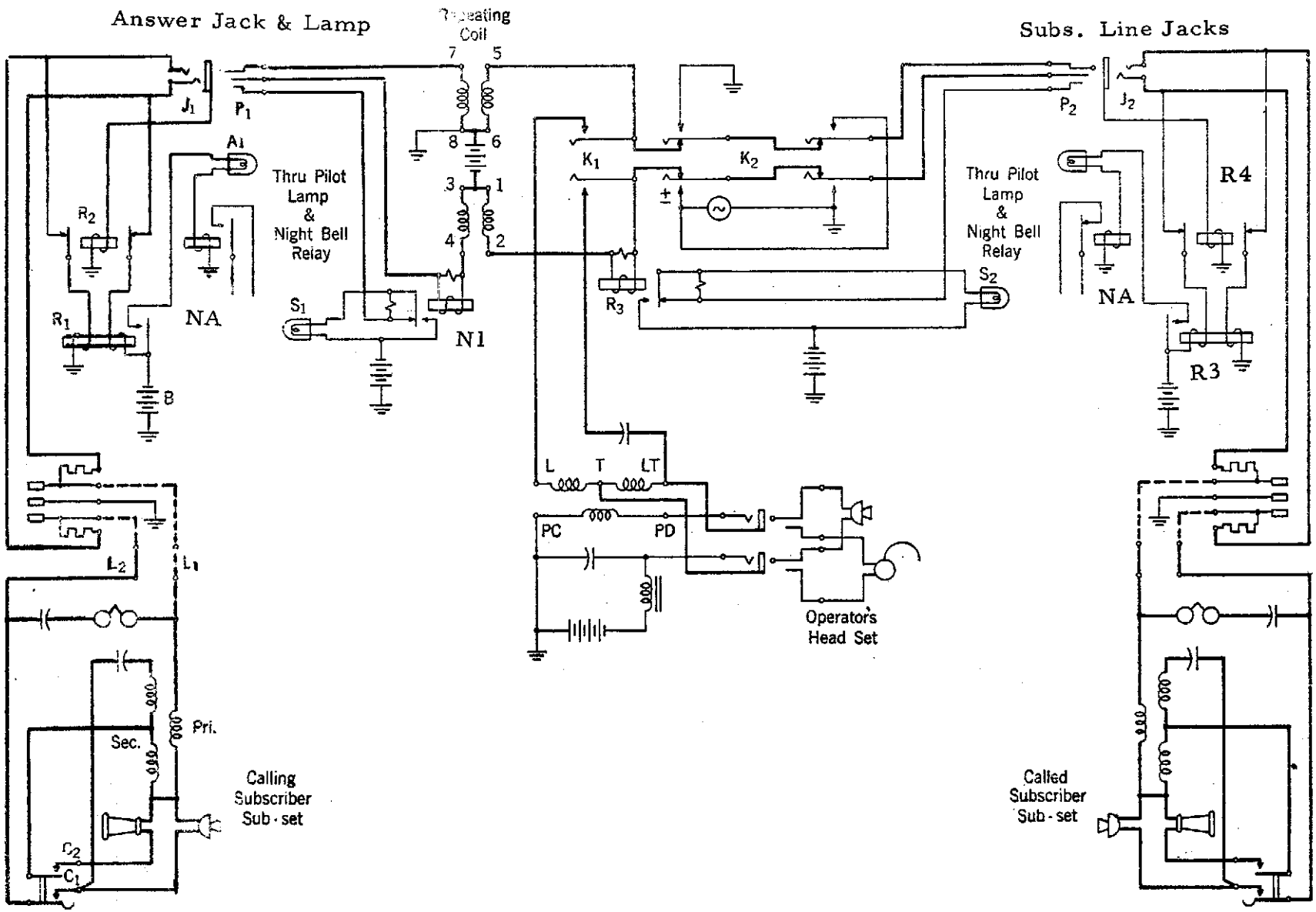

Figure 3-5 Telephone Connection Through Common Battery Exchange

TCI Library: www.telephonecollectors.info

Not only does the operator's voice current flow from the central office cord circuit to the subscriber's receiver, but there is direct current furnished by the central office battery through two of the four windings of the repeating coil of the cord circuit, over the line and through the subscriber's transmitter. This permits the subscriber to talk by virtue of the transmitter carbon resistance varying the strength of the current, which, by means of the repeating coil windings at the central office, induces an alternating voice current across to the opposite side of the cord circuit.

C. Trunk Circuits

A "trunk" is a telephone line which connects one central office with another central office. In the case of a local manual system, when a subscriber calls a subscriber whose line terminates in another central office, the local switchboard operator connects him to a trunk line which routes his call to that office. The operator accomplishes this by inserting the cord circuit plug into one of the outgoing trunk jacks (O.G.T.) mentioned previously. The trunk jack is part of the trunk relay circuit. The number

TCI Library: www.telephonecollectors.info

and types of trunk relay circuits required depend upon the type of facilities, type of signalling, and nature of the distant office to which the particular trunk line is connected. In a similar manner, trunk circuits are also used to complete calls arriving from distant offices. These are called incoming trunks. Trunk circuits also enable operators stationed at different switchboards in the same office to communicate with each other. Some of these intra-office trunks are described later on in this chapter.

3.4 LOCAL SWITCHBOARDS

The use of switchboards containing multiple subscriber line jacks made it possible for one operator to service a great number of lines. However, as more and more telephones were installed, it became impossible to put enough multiple jacks within the reach of each operator. To solve this problem the local manual switchboard function was divided into two types of switchboard sections, the "A" subscribers section and the "B" trunk section. This brought about central offices with lineups of "A" type switchboards cabled to lineups of "B" type switchboards. These two different types of switchboards were usually located in different parts of the building.

A. "A" Switchboard

The subscriber or "A" switchboard is composed of three basic elements required to perform its switching functions. These are the subscriber line circuits, the trunk circuits over which connections are established, and the cord circuits which are used by operators to establish the desired connections. Although varying in appearance, characteristics and capacity, the different types of "A" switchboards all have these basic features.

B. "B" Switchboard

The incoming trunk or "B" switchboard requires only two basic elements to perform its switching function of completing incoming or terminating calls to subscribers. These elements are the subscriber line jack and the incoming trunk circuits.

The subscriber line jacks in the "B" board are a continuation of the multiple jacks in the subscriber line circuits of the "A" board.

TCI Library: www.telephonecollectors.info

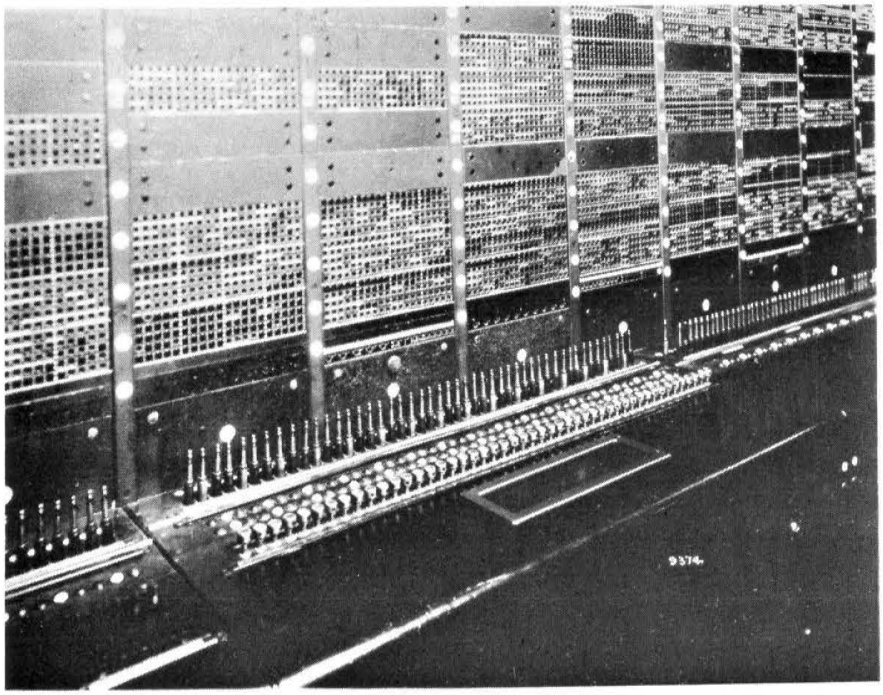

Figure 3-6 Front View of a "B" Switchboard

Incoming trunks at a "B" board handle calls specifically directed for completion to subscribers in the local office. This feature makes it practicable to terminate the trunks on single plug ended cords. Lamp signals are associated with each cord and operators complete calls directly to the subscriber multiple jacks. Since the average number of calls per trunk is comparatively high it has been found that from 30 to 48 trunks will generally furnish enough traffic for one operator. Accordingly, "B" position keyshelves are arranged for 30 to 48 incoming trunks.

Only the cords, keys and lamps of the trunk circuits are located in the switchboard. The trunk circuit relays and position control equipment are located on relay rack bays. Figure 3-6 shows a typical "B" board keyshelf and jack field.

TCI Library: www.telephonecollectors.info

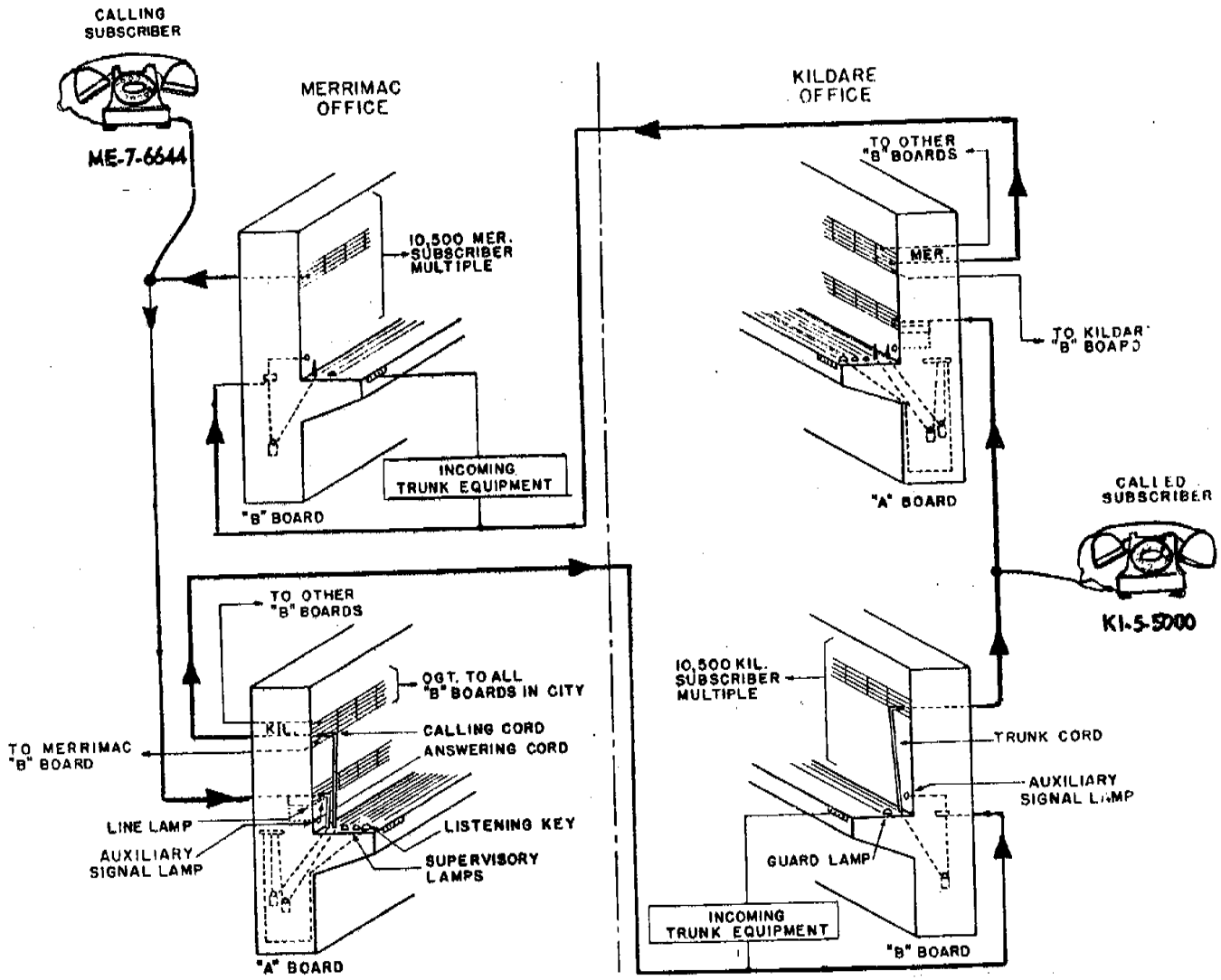

Figure 3-7 Completing Manual Call (Straightforward Trunking Method)

TCI Library: www.telephonecollectors.info

3.5 METHOD OF OPERATION

There are two general methods by which telephone calls may be completed in a central office containing "A" and "B" switchboards. One, the earlier method, uses "call circuit" trunks and the other or newer method, uses "straightforward" trunks.

A. Call Circuit Trunk

When a call circuit trunk is used, the number called is passed by the "A" operator to the "B" operator over a separate circuit, known as a call circuit. The trunk to be used for the connection is assigned by the "B" operator. The "A" operator then plugs the calling cord into the outgoing trunk and the "B" operator plugs the cord on the other end of the assigned trunk into the desired subscribers multiple jack.

B. Straightforward Trunk

When a straightforward trunk is used, the number called is passed by the "A" operator to the "B" operator over the trunk to be used for the connection. In this case the trunk used is selected by the "A" operator. The call circuit is, therefore, not required.

It should be noted from the above comparison that the straightforward method entirely eliminates the call circuit. This has several advantages, among which are: elimination of interference between "A" operators, who use the same call circuit (each call circuit is multipled to a large number of "A" positions); the clearing of the keyshelf of the large number of call circuit key buttons (in large central office districts the number of buttons required is above one hundred); and the service rendered to subscribers is somewhat improved.

Straightforward trunks are divided into three classes, knows as:

1. Key listening
2. Automatic Listening
3. Jack listening

1. Key Listening Straightforward Trunks - This class of straightforward trunks is so called because each trunk has a key associated with it at the "B" board which must be operated before the "B" operator can be connected to it to receive the number of the line being called.

TCI Library: www.telephonecollectors.info

There are several types of key listening straightforward trunks, which differ mainly in the operation of their lamp signals; however, the CITS (Call Indicator Temporarily Straightforward) trunk will be the only one considered herein. The general description given below should furnish a basic understanding of key listening straightforward trunks.

A call is answered in the "A" switchboard in the usual way by an "A" operator plugging an answering cord into the calling subscriber's answering jack. After the "A" operator has received the subscriber's order, she leaves the listening key operated, and using the associated calling cord, tests in the usual way for an idle outgoing trunk to the office in which the called subscriber is located, by touching the tip of the cord to the sleeves of the outgoing trunk multiple jacks. Having selected an idle trunk and plugged the calling cord into it, the "A" operator waits on the connection for momentary tone signals signifying that the "B" operator's telephone set has been connected to the trunk. The "A" operator then tells the "B" operator the desired number. In the meantime, the calling party, while waiting for the connection to be established, can hear the number passed and can correct it if necessary. The "A" operatore then restores the listening key and handles the call in the same manner as for call circuit trunks. When the called subscriber answers, the supervisory lamp of the cord connected to the trunk is extinguished.

In the "B" switchboard a key listening straightforward trunk terminates at the "B" switchboard in a cord and plug. Associated with this cord and plug are an assignment lamp, a disconnect lamp and key, all located in the keyshelf at the "B" switchboard. The relays associated with the trunk are located on a relay rack in the terminal room.

When a cord is plugged into a trunk at the "A" switchboard, the assignment lamp of this trunk is lighted at the "B" switchboard, thus indicating to the "B" operator that a call is waiting on that trunk. The "B" operator's telephone set is connected to the trunk when she operates the associated key. The operation of this key also sends momentary tone signals over the trunk to the "A" switchboard so that the "A" operator knows when the "B" operator is ready to receive the number called. In addition, the operation of the key changes the steady assignment lamp to a flashing signal. This indicates to the "B" operator the trunk to which she is connected.

TCI Library: www.telephonecollectors.info

After the "B" operator learns the number of the called subscriber, she tests the called line in the usual way by touching the tip of the plug to the sleeve of the called line multiple jack. If the line is idle, she inserts the plug in the multiple jack and the ringing starts automatically. If the line is busy, she inserts the plug in the busy back jack which returns a busy tone to the calling subscriber and flashes the supervisory lamp at the "A" switchboard.

Insertion of the plug into any working jack extinguishes the flashing assignment lamp and disconnects the "B" operator from the trunk. The operator is now ready to take up a call on another trunk.

Although both subscribers control supervisory signals (the lighting of the lamps) at the "A" switchboard, neither subscriber has any control over the disconnect signal associated with the trunk at the "B" switchboard. This signal is entirely controlled by the "A" operator.

The "A" operator disconnects from the trunk by removing the calling cord from the trunk jack. This causes the disconnect lamp to light. The "B" operator removes the trunk cord, extinguishing the disconnect lamp. Should the "B" operator fail to remove the cord before the trunk is selected for another call, the assignment lamp will relight together with the disconnect lamp, but ringing current will not be placed on the trunk. In such a case the operator must remove the cord, and extinguish the disconnect lamp. If this is not done, her telephone set will not be connected to the trunk when the key is depressed.

Several assignment lamps may be lighted simultaneously, each indicating a call waiting on the associated trunk; however, only one trunk can be connected to the operator's set at a time. In order to facilitate handling calls when traffic is heavy, the equipment may be arranged to permit the operator to overlap her calls, that is, operate a second key to disconnect her set from a trunk to which she is connected and cause her set to be connected to the second trunk while she is completing the connection for the first trunk. It is necessary for the operator to remember the number wanted on the first trunk until she completes that connection.

TCI Library: www.telephonecollectors.info

2. Automatic Listening Straightforward Trunks - This class of straightforward trunk is so called because the "B" operator is automatically connected to a trunk on which a call is waiting. This is the most generally used type of straightforward trunk.

The operation of the "A" switchboard is the same as described above for "Key Listening" operation. An automatic listening straightforward trunk terminates at the "B" switchboard in a cord and plug. Associated with the cord and plug is a trunk lamp which acts as both a guard and a disconnect signal and sometimes as an auxiliary signal lamp.

When a cord is plugged into a trunk at the "A" switchboard, the trunk lamp at the "B" switchboard lights steadily as a guard signal, indicating a call waiting on the trunk. The circuits are so arranged that the operator's set is automatically connected to the trunk.

When the trunk lamp lights, momentary tone signals are sent over the trunk to the "A" switchboard so that the "A" operator knows that the "B" operator is ready to receive the number called. This changes the steady guard lamp to a flashing signal to indicate to the "B" operator the trunk to which she is connected.

As an example of this type of call, assume that a subscriber in the Merrimack office, whose number is 6644, removes his handset to originate a call (Figure 3-7). This lights the subscriber line lamp and a panel auxiliary signal lamp on the Merrimack "A" switchboard. The Merrimack "A" operator operates the listening key of a cord circuit, inserts the plug of the answering cord into the associated answering jack, extinguishing the line and auxiliary signal lamps, and says, "Number Please." The calling subscriber at MErrimack - 7-6644, gives the number of the party being called, "KIldare - 5-5000". The Merrimack "A" operator says, "Thank you," and using the calling cord plug tests for an idle outgoing trunk (O.G.T.) to Kildare office. This test is made by touching the tip of the calling cord plug to the sleeve rim of the outgoing trunk (O.G.T.) jack. (When idle trunk indicating lamps are used the operator selects the idle trunk visually by means of the spot of light over the (O.G.T.) jack.) Having selected an idle trunk, the Merrimack "A" operator then inserts the plug of the calling cord into the O.G.T. jack, causing the calling cord supervisory lamp at the Merrimack "A" switchboard to light.

TCI Library: www.telephonecollectors.info

Current from the calling cord at the Merrimack "A" switchboard operates relays in the Kildare incoming trunk circuit which causes the associated guard and disconnect lamp and the auxiliary signal lamp to light at the Kildare "B" switchboard. If no other calls are waiting to be answered at the Kildare "B" switchboard, the control relays in the associated "B" switchboard position operate, causing the guard and disconnect lamp to flash and automatically connect the "B" operator's telephone circuit to the trunk, at the same time sending out two momentary "order" or "Zip" tones which are heard by the "B" operator, the Merrimack "A" operator, and the calling subscriber. The Merrimack "A" operator hearing the order tones knows that the Kildare "B" operator is connected and says "5000" and then releases the listening key. The Kildare "B" operator picks up the trunk cord plug associated with the flashing guard and disconnect lamp and tests line 5000 in the multiple by touching the tip of the trunk cord plug to the sleeve of the jack. If the line is found idle, she inserts the plug into the jack. This causes trunk relays to operate which extinguish the guard and disconnect lamp and auxiliary signal lamp, connect ringing current to the called line, and disconnect the operator's telephone set from the trunk.

The calling subscriber hears ringing induction, as an indication that the called party's bell is being rung. When the Kildare-5 subscriber "5000" answers, relays in the incoming trunk circuit operate disconnecting the ringing current and extinguishing the calling cord supervisory lamp at the Merrimack "A" switchboard. While the subscribers converse, battery is being furnished by the "A" and "B" board cord circuits. When they have finished and replaced their handsets the answering and calling cord supervisory lamps on the Merrimack "A" switchboard light up.

The Merrimack "A" operator then removes the answering and calling cord plugs from the jacks, again lighting the trunk guard and disconnect lamp at the Kildare "B" board. The Kildare "B" operator removes the associated trunk cord plug from the multiple jack extinguishing the guard and disconnect lamp and equipment is again normal.

There are some Special Features associated with these trunks. For instance, several guard lamps may be lighted at the same time, each indicating a call waiting on the associated trunk, but only one trunk can be connected to the operator's set at a time. Each trunk on which a call is waiting will be connected in rotation, the lowest number cord first, then the next higher, etc.

TCI Library: www.telephonecollectors.info

In order to facilitate handling calls, each position is provided with a button, called "master release key," mounted on the keyshelf. The operation of the release key permits the operator to overlap her calls, that is release her telephone set from a trunk to which it is connected and connect it to the next trunk on which a call is waiting while she is completing the connection on the first trunk. If an "A" operator plugs into a trunk but disconnects before the "B" operator is connected to the trunk, the guard signal will remain lighted and the "B" operator will be connected to the trunk in regular sequence as for a call. The "B" operator in such a case may release her set from the trunk by operating the release key.

Although both subscribers control supervisory signals at the "A" board, neither subscriber has any control over the disconnect signal associated with the trunk at the "B" board. This signal is entirely controlled by the "A" operator. When the "A" operator disconnects from the trunk by removing the calling cord from the trunk jack, it causes the lamp associated with the trunk to light as a disconnect signal. The "B" operator removes the cord, extinguishing the disconnect lamp.

Should the operator fail to remove the cord before the trunk is selected for another call, the trunk will be connected to the "B" operator's set in regular sequence and the lamp will flash as soon as the trunk is so connected, regardless of whether or not the trunk is still up in a multiple jack. Under this condition, however, the subscriber will not be rerung.

3. Jack Listening Straightford Trunks - This class of straightforward trunk is so called because the "B" operator connects her set to any trunk on which a call is waiting by plugging the trunk into a listening jack. After learning the number wanted, the "B" operator removes the cord from the listening jack and disposes of the call in the usual way.

TCI Library: www.telephonecollectors.info

3.6 LOCAL MANUAL SWITCHBOARDS TODAY

The conversion of local offices from manual to various electromechanical (Step-by-step, Crossbar #5, etc.) offices and eventually to electronic (No. 1 ESS, etc.) offices did not entirely eliminate the need for Local Manual Switchboards. Such a switchboard is still required to handle the originating and terminating traffic which the automatic equipment is unable to complete, or in certain areas where the installation of automatic equipment is as yet not economical.

TCI Library: www.telephonecollectors.info

CHAPTER 4

STEP-BY-STEP SYSTEMS

4.1 INTRODUCTION

The Step-by-Step System of automatically establishing telephone connections, is the oldest of the several types of machine switching systems which comprise the modern telephone plant. Its invention is generally credited to Almond B. Strowger in 1889; hence, it was originally known as the Strowger Dial System.

Step-by-Step Systems are quite flexible in that they may be used for local dial service in communities requiring about 100 lines, or for large central offices requiring 10,000 lines or more. Various types of PBX's also use a Step-by-Step System.

When intertoll dialing service was first introduced, the Step-by-Step configuration was readily adapted to it. However, recent Crossbar Systems, with their many advantages, have replaced some of the larger Step-by-Step intertoll systems. Most of the future intertoll systems will be of the crossbar and electronic variety except for certain situations such as small isolated toll centers, or toll centers with local Step-by-Step systems where Step-by-Step intertoll arrangements may be installed for economy reasons.

All Step-by-Step systems are somewhat alike; however, the circuit requirements vary with the size of the system. Also, some features which are desirable in larger offices are unnecessary in smaller, less complicated units. Because of this, various types of systems have been developed to provide adequate yet economical service. Figure 4-1 shows typical Step-by-Step office equipment.

The term "Step-by-Step" is not only descriptive of the intermittent motion of the principal switches used in the system but it is also descriptive of the manner in which a call progresses, one stage at a time, from the input terminal, through a tree-like structure of switches and trunks, to the output terminal. It is a progressive control system and distinct from a common control system which first determines the input and output terminals,

TCI Library: www.telephonecollectors.info

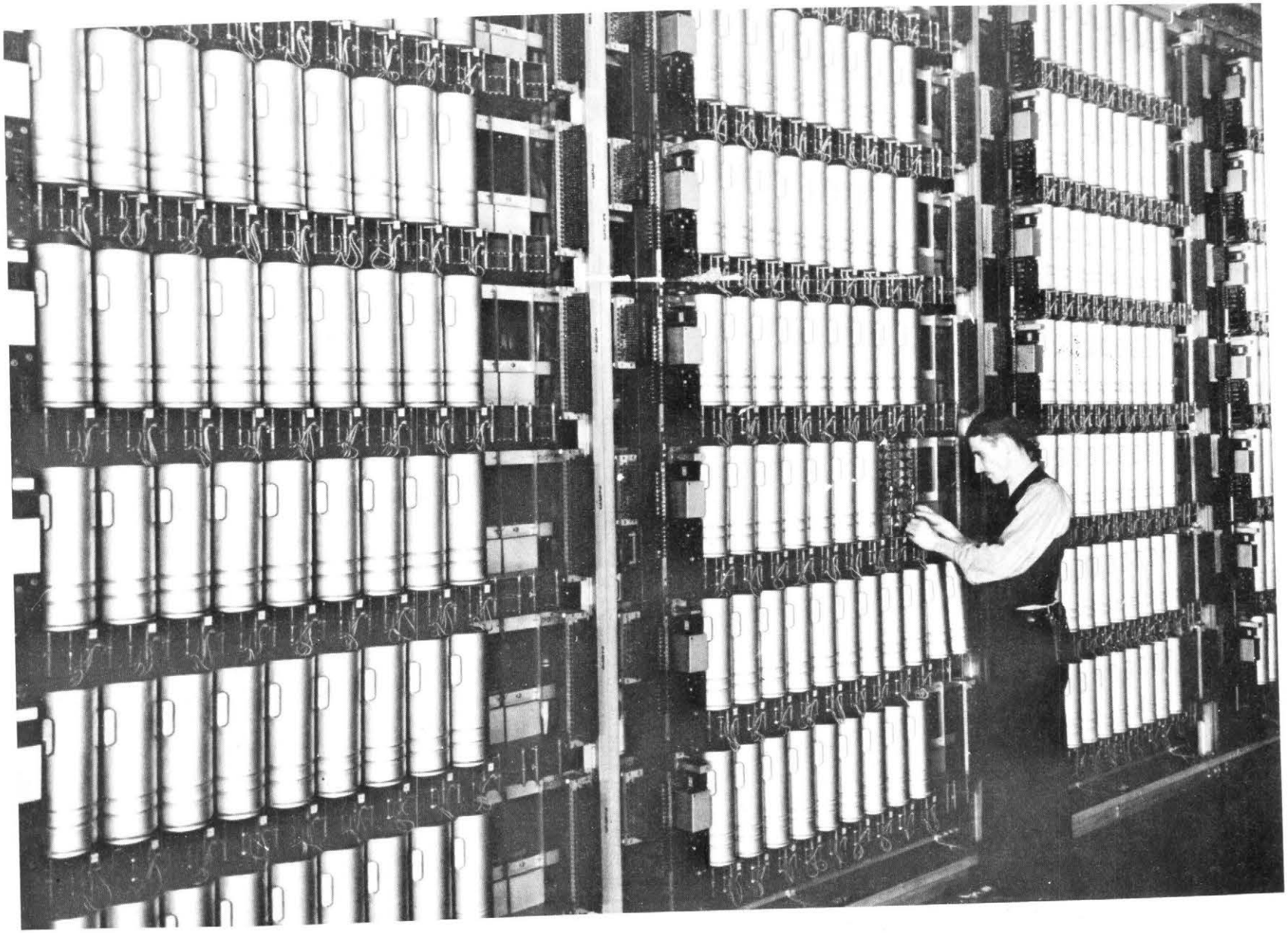

Figure 4-1 Typical Step-by-Step Dial Office Equipment

TCI Library: www.telephonecollectors.info

and then on the basis of this determination, causes a path to be established between them through a grid like network.

Progressive control systems are classified as direct progressive or register progressive control. Direct progressive control is defined as a system in which the switching network is under the immediate and direct control of the subscriber's calling device. A register progressive control system, on the other hand, interposes a circuit between the subscriber and the switching network that accepts and registers signals from the subscriber and which in turn controls the succeeding switches. Usually this circuit is called a register, although the registration function may be incorporated in other circuit units. The Step-by-Step system was originally a direct progressive control system. Recent developments, however, have provided various means of modifying it to a register progressive control system.

4.2 SWITCHES

In any switching network three fundamental aspects must be considered; these are the switch, the network and the control. While they are closely related and the nature of one influences the nature of the others, the Step-by-Step switch had a tremendous influence on the development of the system.

The Step-by-Step switch as shown in Figure 4-2, is the most important switching device in the system. Other switches, such as the "Plunger" type and simple rotary type, have been used for various minor concentrating jobs in early offices. The rotary type, which has shown itself to be a reliable switch, is still in use.

A. STEP-BY-STEP SELECTOR SWITCHES

Essentially the Step-by-Step switch is a two-stage rotary switch, and is shown schematically in Figure 4-3. The principle mechanical parts of this switch are shown in Figure 4-4.

The terminals are physically arrayed in banks, each bank consisting of 10 horizontal levels with 10 positions per level - a total of 100 positions as shown in Figures 4-5

TCI Library: www.telephonecollectors.info

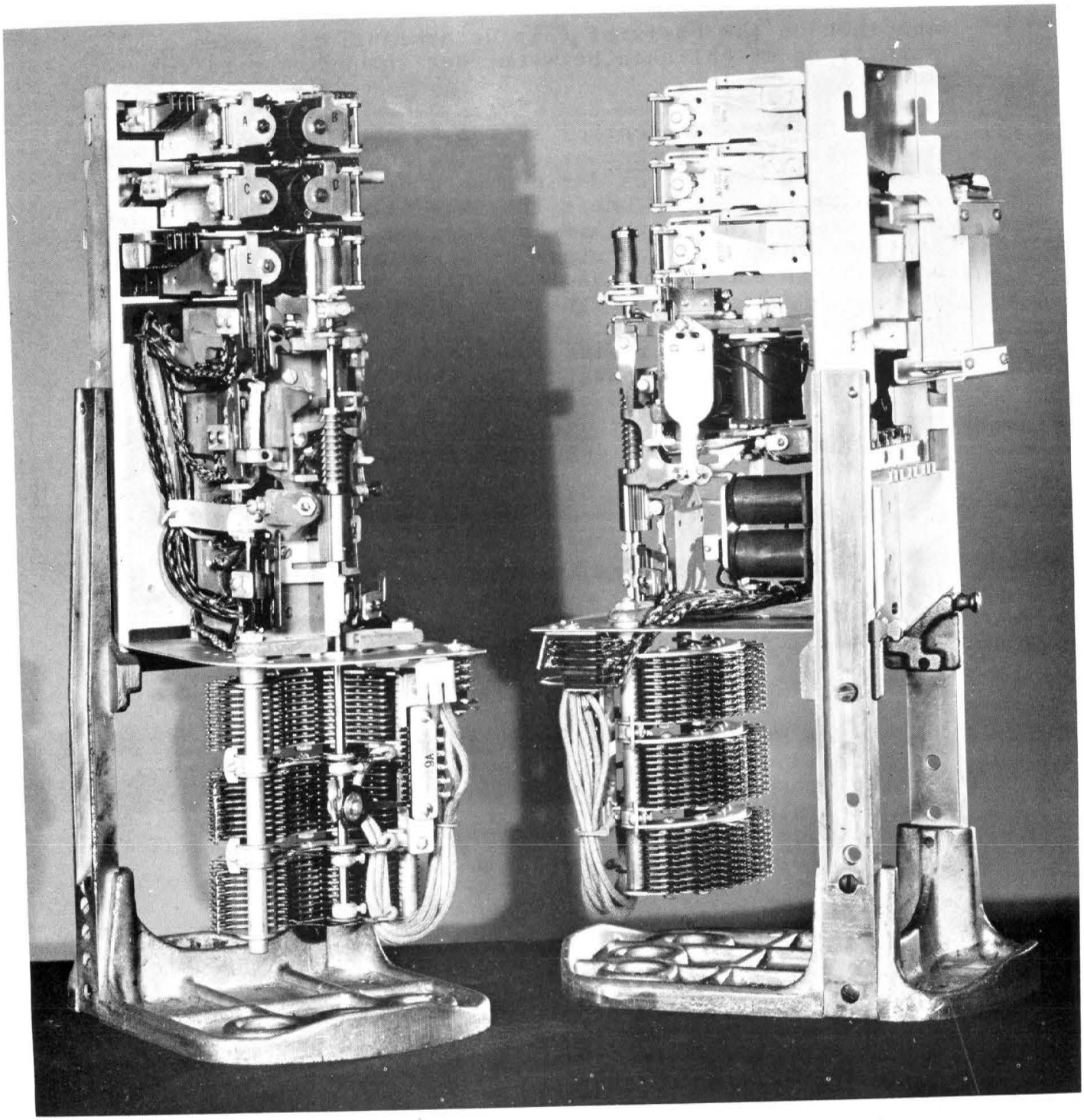

Figure 4-2 A Typical Step-by-Step Switch with Cover Removed

TCI Library: www.telephonecollectors.info

and 4-6. Some terminal banks have two terminals, insulated from each other, at each position, while others have only one terminal at each position. With each bank there is associated an assembly of two brushes, which are rigidly connected to a vertical shaft that is driven upward while the brushes are clear of the banks. Rotating the shaft horizontally brings the brushes into contact with the bank terminals of one horizontal level.

Two control magnets actuate the shaft and brushes during the establishment of a connection; a vertical magnet steps the shaft upward to the desired level and a rotary magnet steps the brushes along the terminals on that level. Both magnets are coupled to the shaft by means of pawl and ratchet assemblies. In both vertical and rotary stepping, the brushes move when a magnet is energized. The deenergization of the magnet permits the stepping mechanism to return to normal, preparatory to the next stepping action. As the shaft is rotated over the terminals, a helical spring located at the top of the shaft is wound up to provide a restoring torque.

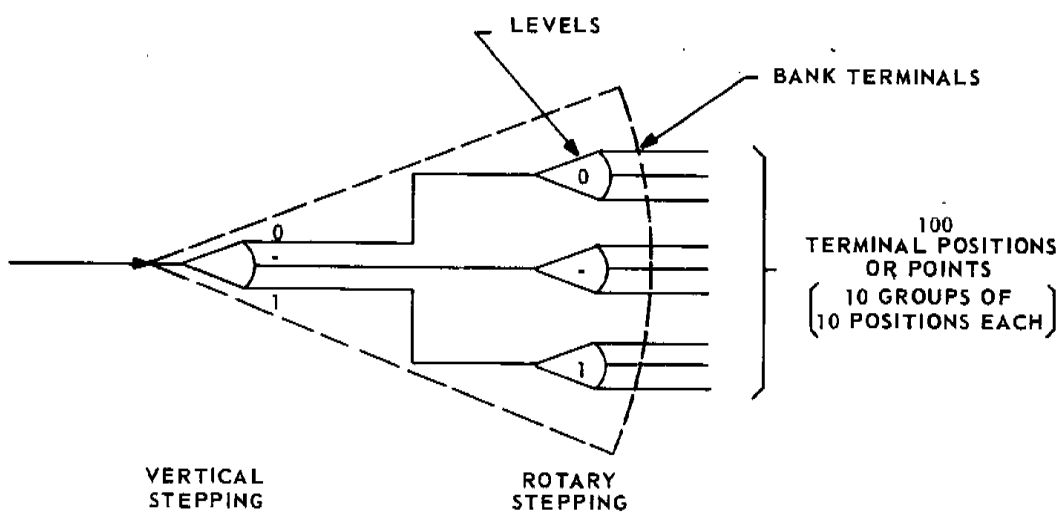

Figure 4-3 Equivalent Diagram of a Step-by-Step Switch

TCI Library: www.telephonecollectors.info

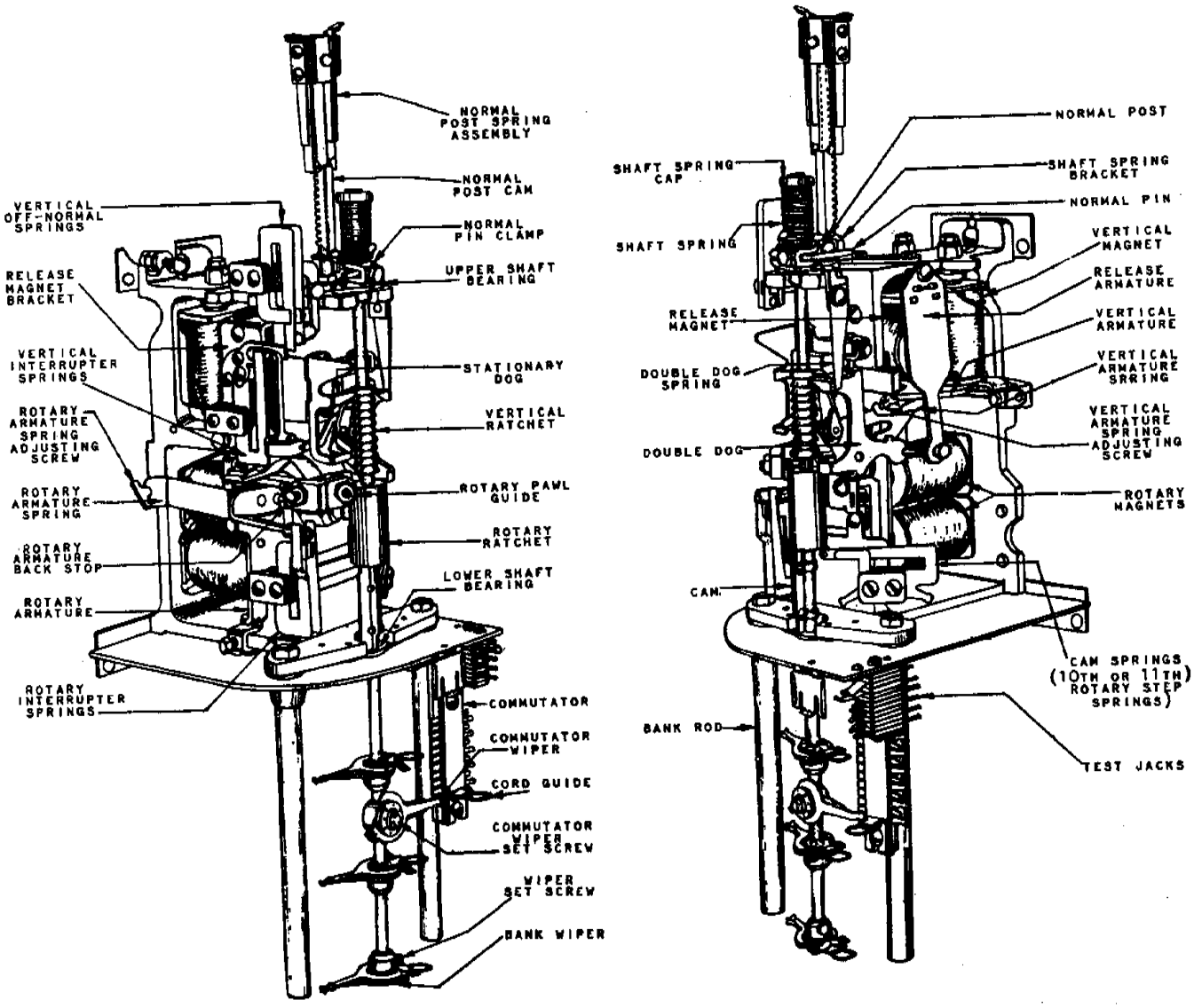

Figure 4-4 Line Finder Switch

TCI Library: www.telephonecollectors.info

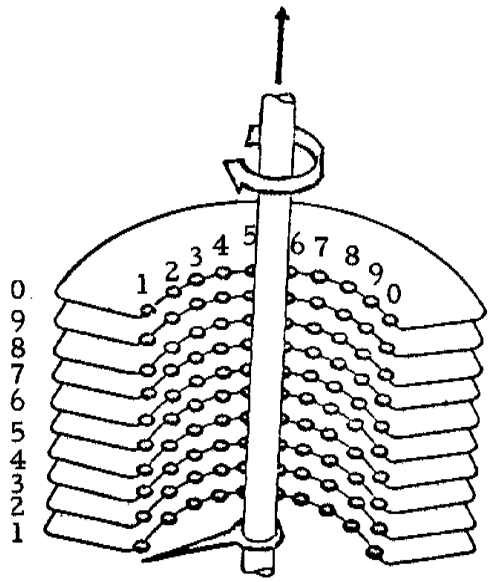

Figure 4-5 Representation of a 100-Point Bank Assembly

TCI Library: www.telephonecollectors.info

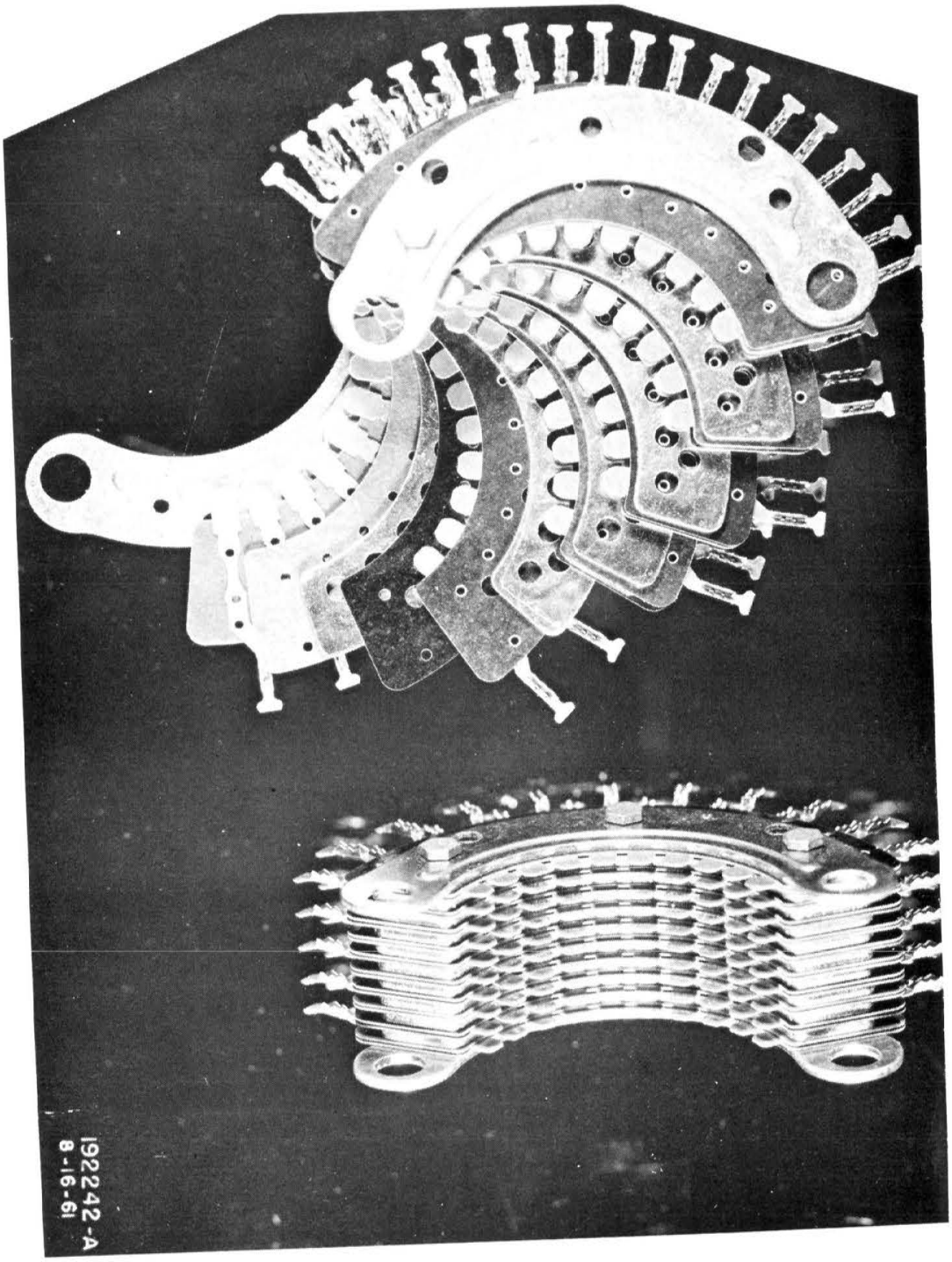

Figure 4-6 Typical 100-Point Bank

TCI Library: www.telephonecollectors.info

The shaft and brush assembly is restored to normal by energizing a release magnet which withdraws restraining fingers from the vertical and rotary ratchets. The helical spring is thus permitted to rotate the shaft back to its normal rotary position. Thereupon gravity drops the shaft to its normal vertical position.

Since a switch bank is limited to two terminals per position, a separate bank and brush assembly must be provided for each pair of conductors to be cut through the switch. Switches may be furnished with as many as four switch banks to cut through eight leads. The switch in Figure 4-2 is equipped with three banks.

Various contact arrangements controlled by the switch magnets and brush shafts are provided where needed to aid in controlling the switch. Interrupting contacts permit both vertical or rotary self-stepping, hunting feature. When the switch steps past the tenth and final rotary bank position, a set of contact springs are activated. The operation of these springs is referred to as making the "11th rotary step" which indicates a failure to find a desired terminal.

Since the basic step-by-step switch can be operated in one of two modes: select or hunt, it is theoretically possible, for a two-stage switch to operate in one of four modes; select-select, select-hunt, hunt-hunt and hunt-select. Actually step-by-step switches utilize only the first three modes, select-select, select-hunt and hunt-hunt.

B. ROTARY SWITCHES

Rotary-type selector switches consist, primarily, of arcs of terminals over which associated wipers pass. An electromagnet mounted on the switch assembly provides power to move the wipers from one terminal position to the next; each separate energization and deenergization cycle of the magnet causes the wipers to move one position. There are two basic types of rotary switches: forward-action or direct driven switches, which step from one terminal to the next terminal on the energization of the magnet; and back-acting or spring driven switches, that step on the deenergization of the magnet. The control magnet of either type of switch is known as the "step magnet."

TCI Library: www.telephonecollectors.info

When the step magnet of a forward-acting switch is energized, a pawl coupled to the magnet armature is forced against the teeth of a ratchet wheel on the shaft supporting the wipers, causing the shaft to rotate through a small angle, thus moving the wipers from one terminal to the next. A detent engaging the ratchet wheel insures that the wipers remain on the terminal just reached when the magnet is deenergized. In the case of a back-acting switch, energization of the step magnet pulls a pawl away from the ratchet wheel on the wiper shaft, against the force of a spring attached to the frame of the switch. When the magnet is deenergized, the pawl is pulled back by the spring, engaging a tooth on the ratchet wheel and advancing the wipers a single step.

Some rotary switches may be caused to step continuously in the same rotary direction over the same set of terminals, whereas others, after stepping their wipers over the associated arcs, must be returned to a normal position before the wipers can again be moved over the arc terminals. These two types of switches are designated nonhoming and homing, respectively. Switches of the homing type are normally equipped with a second magnet, a release magnet, which allows a spring to restore the wipers to the starting position.

Wipers may be either of two types: bridging, in which adjacent arc terminals are short-circuited by the wiper as it steps from one to the other; and nonbridging, in which the wiper leaves one terminal before it makes contact with the next.

Illustrated in Figure 4-7 is a back-acting rotary switch consisting of six arcs of 22 terminals each. The wipers are double-ended so that, when one wiper end has passed over the half-circle of 22 terminals, the other end is in position to start stepping over the same 22 terminals. Occasionally, single-ended wipers mounted in pairs staggered 180 degrees apart are utilized on a similar switch so that two adjacent arcs of 22 terminals may be employed as a continuous bank of 44 terminals. The switch may be driven by external circuit pulses at a rate of up to 25 or 30 steps per second; a rate of 50 or 60 steps per second may be realized if the switch runs under self-interrupted control by using the break contact of the stepping magnet.

TCI Library: www.telephonecollectors.info

A forward-acting ten-terminal two-arc switch is illustrated in Figure 4-8. In addition to the stepping magnet, this switch is furnished with a release magnet, shown in the lower left corner. In the normal position, the wipers stand in the position just preceding the first terminal. The switch may be driven at speeds up to 25 steps per second.

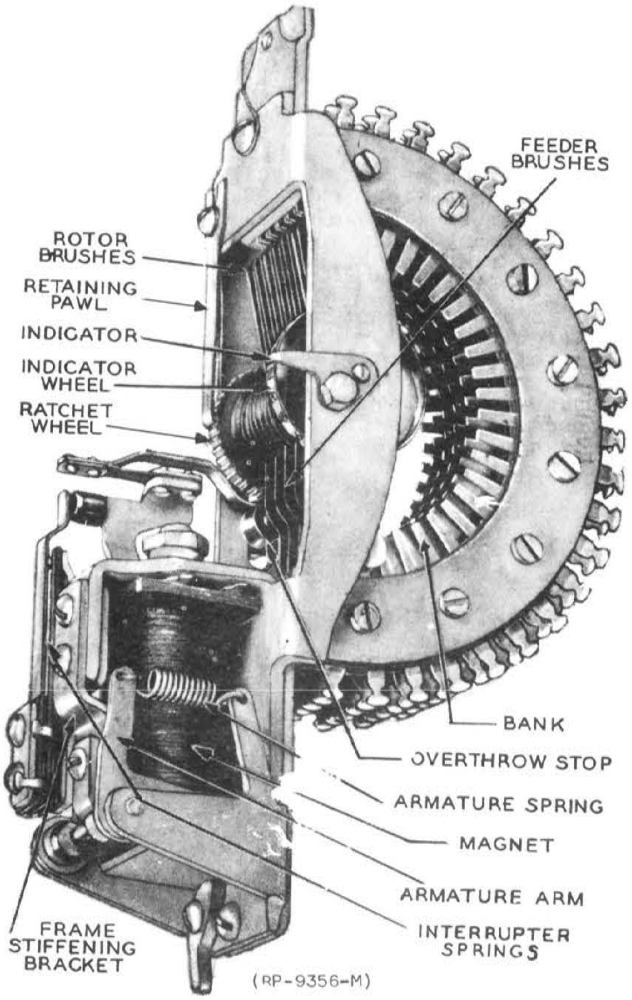

Figure 4-7 22-Point Rotary Selector

TCI Library: www.telephonecollectors.info

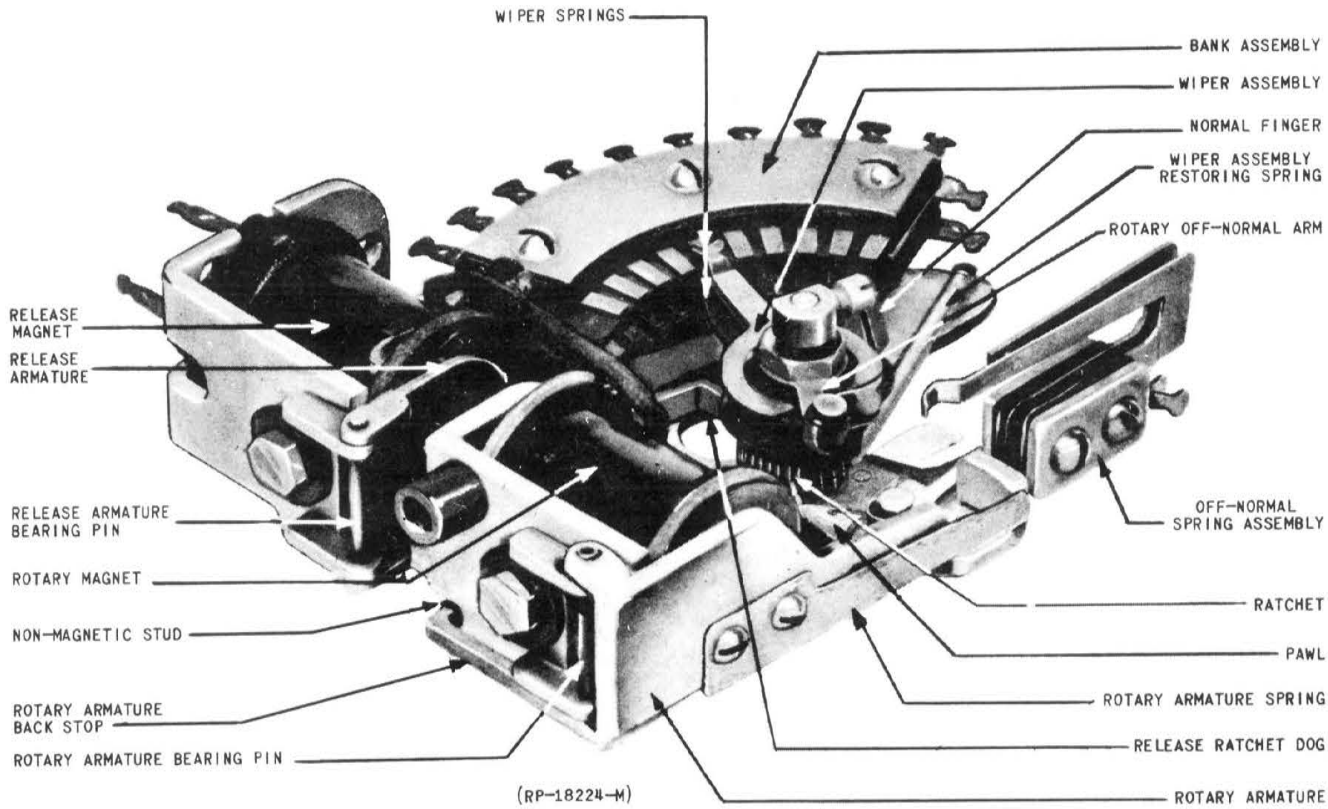

Figure 4-8 10-Point Rotary Selector

C. PLUNGER SWITCHES

Another switch which was widely used for concentration purposes is the plunger switch. This switch has been almost entirely superseded by the line finder switch, but they were widely used in early offices and are still in operation today.

The principal parts of a plunger switch is represented in Figure 4-9. It consists of a relay (not shown), a magnet, a plunger and a segment of a bank having ten sets of terminals arranged in an arc. The fixed contacts of the ten sets of terminals are multipled to a single input, while the flexible contacts each connect to a separate output.

TCI Library: www.telephonecollectors.info

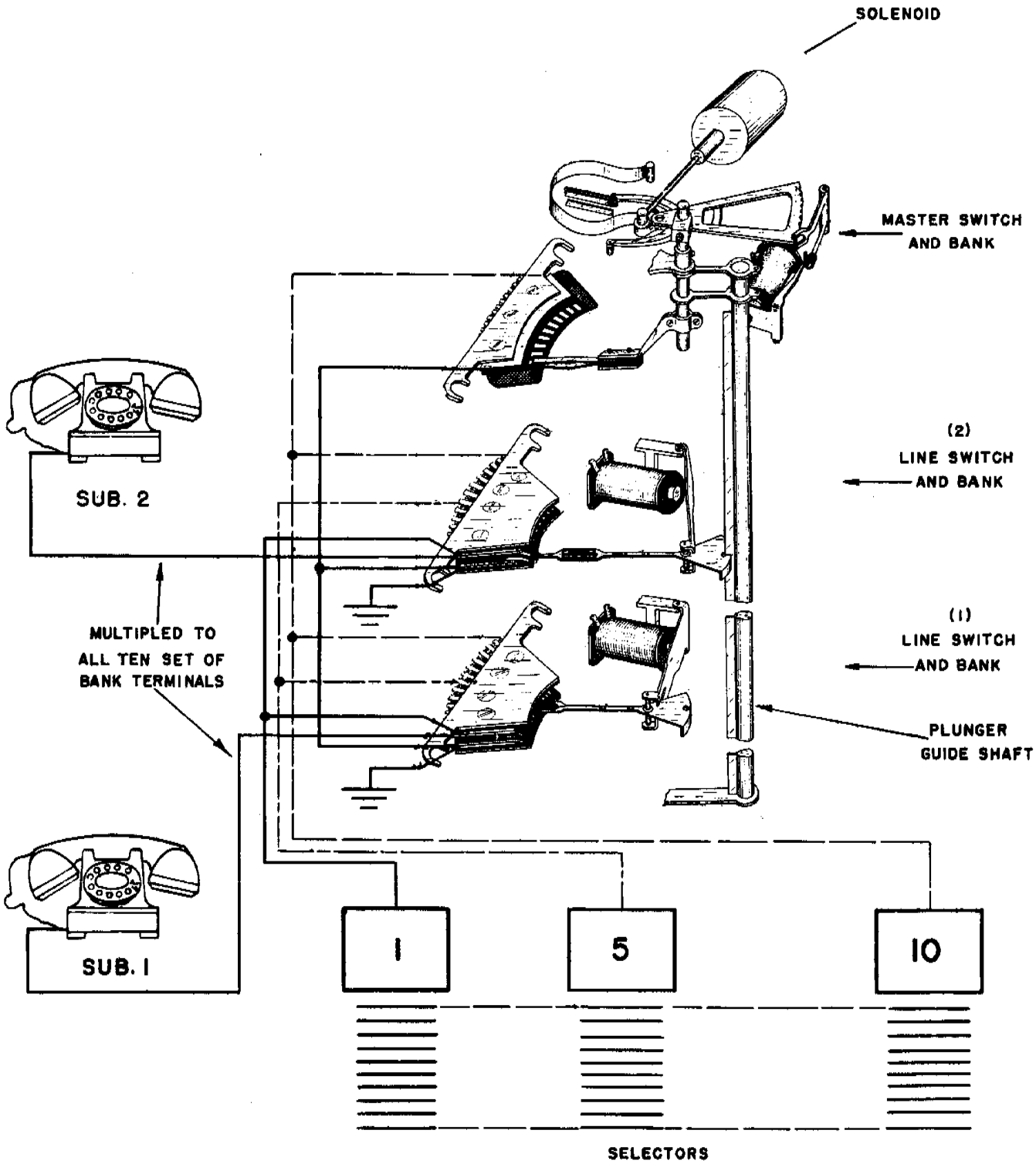

Figure 4-9 Plunger Switch

TCI Library: www.telephonecollectors.info

The "wing" of the plunger is slotted and engages a guide shaft which is capable of being oscillated through about 40 degrees. The motion of the shaft enables the plunger to be aligned with any one of the ten sets of terminals.

When an input demands attendance, the relay is energized which in turn energizes the magnet causing the switch to "plunge in" and extend the input to an output. While the switch actually is a crosspoint switch, it is convenient to consider it to be a 10-point rotary hunting, backward-facing switch. In this particular case the inputs are on the bank terminals and the output is via the wiper.

A number of plunger switches are associated with the same group of trunks by multipling the outputs, as shown in Figure 4-10, and by controlling the plungers with the same guide shaft as shown in Figure 4-9.

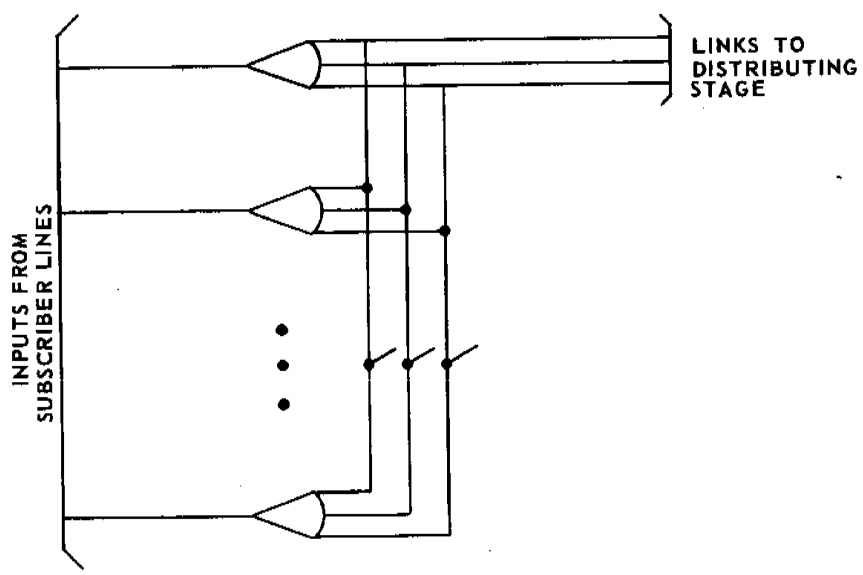

Figure 4-10 Concentration Stage Unit Using Multipled Output Line Switches

TCI Library: www.telephonecollectors.info

A master switch is provided for each guide shaft. Supervisory leads from each trunk terminate on a 10-point master switch bank and serve to "mark" busy trunks. The master switch rotates and controls the guide shaft so that it will only come to rest opposite an idle output. It also prevents switches from "plunging in" during the time it is hunting for an idle trunk.

When the line switch plunges in, it disengages itself from the shaft and the input is extended to the trunk, marking the corresponding terminal of the master switch bank to indicate that it is no longer idle. The master switch rotates the shaft and all engaged plungers from left to right until it reaches an idle trunk. When the shaft reaches the right hand position (Trunk No. 1) and finds it busy, a solenoid rotates the shaft, and plungers, back to the left hand position (Trunk No. 10) where the master switch continues its left to right search for an idle trunk. Hence a plunger switch is "preselecting" as opposed to a finder which is "post selecting."

When an input no longer requires attendance, the plunger is released. On some types of switches, known as self-aligning, the plunger is immediately aligned with, and engaged to, the shaft regardless of its position, while in other switches the plunger will "come out" but not engage the shaft until the shaft again swings in front of the trunk and "picks it up."

4.3 GENERAL SWITCHING PRINCIPLES

A. GENERAL

The primary objective of all switching systems is to permit any subscriber to establish a connection with any other subscriber within that system. Also, a switching system must provide the most economical means of switching various paths together.

The paths in the Step-by-Step system are one-way, since the connections are set-up or controlled through the switching elements in one direction. This characteristic suggests that a path may be divided into an originating and terminating stage.

TCI Library: www.telephonecollectors.info

The originating-terminating concept permits all connections from subscriber to subscriber to follow the same general pattern. The plan shown in Figure 4-11 embodies the concept of originating networks being linked to terminating networks by means of three kinds of trunks; outgoing, incoming and intraoffice.

Each call requires a trunk; consequently, the number of trunks which are required is a function of the number of simultaneous calls in an office, since the trunk or trunks used are held for the duration of the call. Obviously this is less than the total number of subscribers. Hence, one requirement placed upon the originating network is that it must concentrate a large number of inputs (subscribers' lines) into a comparatively small number of outputs (trunks) and, conversely, the terminating network must be able to expand the inputs (trunks) into a greater number of outputs (subscriber lines).

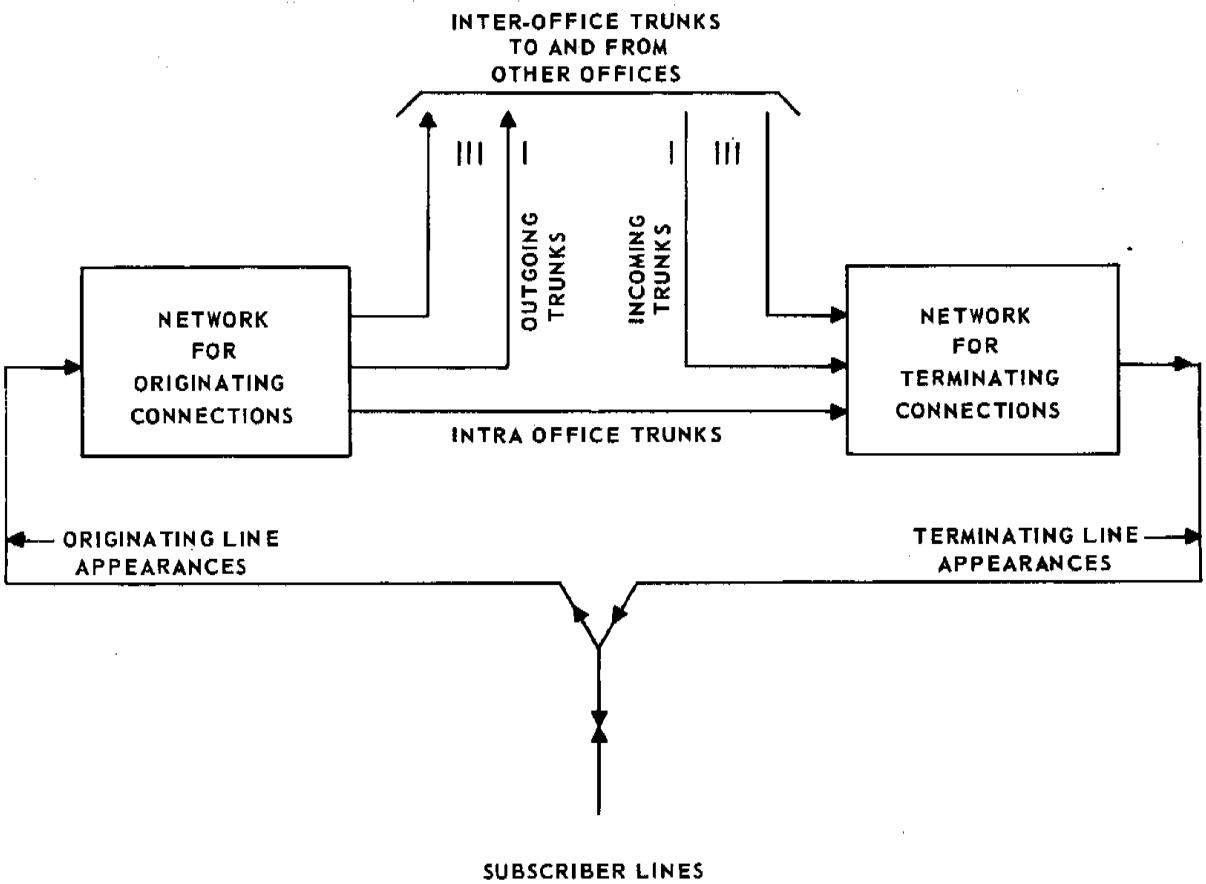

Figure 4-11 Originating and Terminating Connections

TCI Library: www.telephonecollectors.info

Figure 4-11 indicates that the originating network connects to a group of intraoffice trunks as well as several groups of trunks to each of the several "other" offices. A second requirement of the originating network, is that any subscriber's line must have access to every group of inter- or intraoffice trunks, but not necessarily to every trunk in each group in order to reach any other subscriber. However, in the terminating network all trunks in each group must have access to all subscribers.

The requirements placed upon the originating and terminating stages are symbolized in Figure 4-12. It can be seen that the originating network consists of a concentrating stage, where subscribers' lines compete with each other for a connection to the distributing stage. The distributing stage has the same number of inputs and outputs and provides a means of selecting a trunk to the desired terminating office. The terminating stage has a similar distributing stage and an expansion stage.

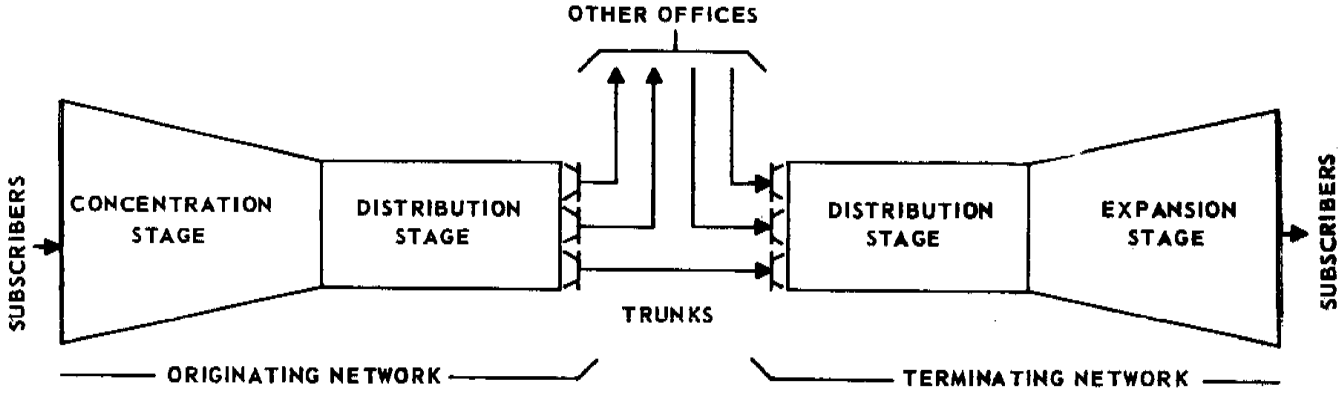

Figure 4-12 Basic Switching Network

TCI Library: www.telephonecollectors.info

The access of a switch is limited by the number of its points; consequently, a fundamental problem in designing a network is to provide access for a particular path that is equal to or greater than the access provided by the basic switch. This is particularly true in the step-by-step system which employs low access switches.

B. CONCENTRATION STAGE

The purpose of the concentrating stage is to provide a means of connecting a large number of subscriber lines to a smaller number of trunks to the distributing stage. Two switches are available for this purpose, the older arrangement utilizing line switches and the new arrangement utilizing line finders. In either case, the concentration stage must recognize when a call is being originated, provide a trunk to the distributing stage and guard (busy out) the calling subscriber's line so that the terminating network cannot connect to it.

(1) Line Finders

The line finder method shown in Figure 4-13 used either a 100- or 200-point line finder switch. When a subscriber originates a call, the switch hunts for the calling line and extends the connection to a permanently associated first selector.

A line finder switch is a concentrating device, or backward-facing switch, operating in the hunt-hunt mode. It is used to concentrate subscriber lines.

100- and 200-point line finders are available. When the switch is called upon to make a connection, it hunts for the terminal to which it must connect. However, in order to do this, control circuits must mark not only the terminal but also a segment of a commutator to indicate the level on which the terminal lies. The switch first steps vertically, examining the commutator to find the proper level, and when it is found, the switch then steps horizontally to find the marked terminal.

TCI Library: www.telephonecollectors.info

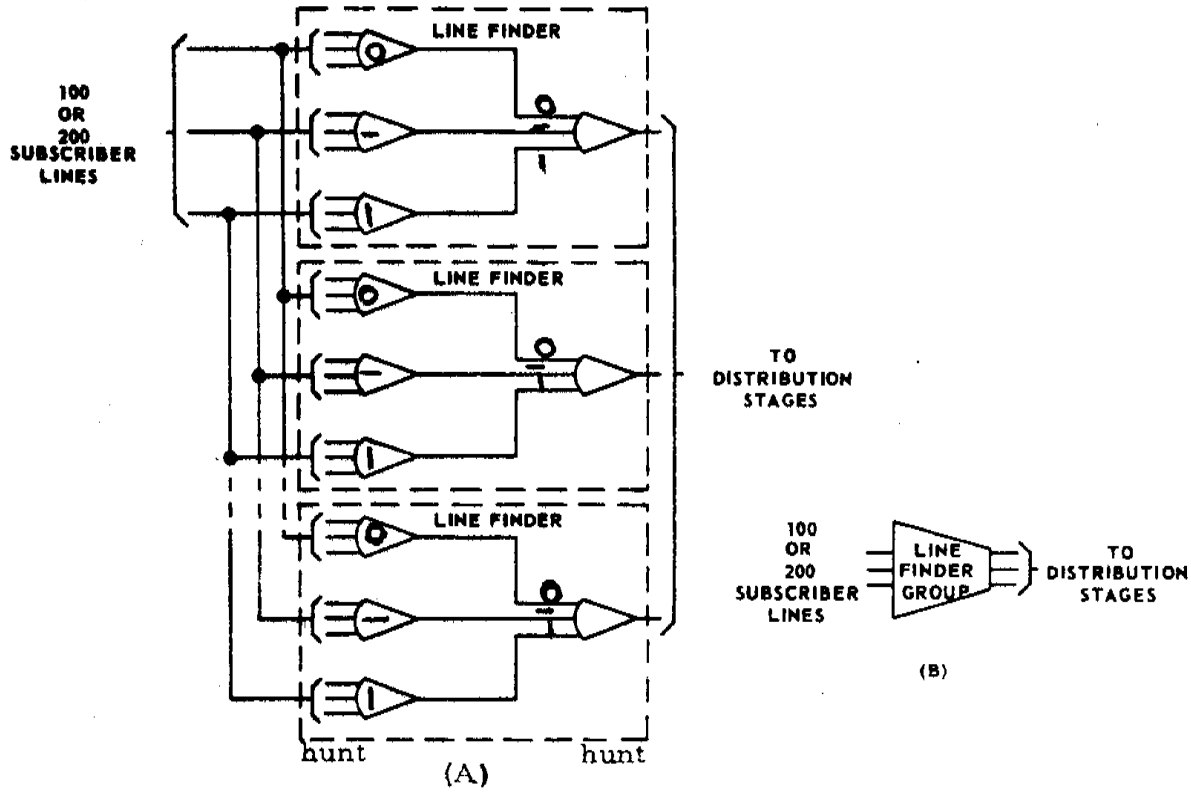

Figure 4-13 Concentration Stage Unit Using Multipled Line Finders

With the 200-point line finder, each of the switch positions is associated with two lines. As the switch conducts the horizontal hunt for the marked terminal, it simultaneously examines the terminal associated with both lines. When it finds the position, it then determines which of the two lines at that position is marked and then connects to it. To do this, the switch uses two sets of brushes or wipers, one set for the "upper" and the other for the "lower" set of terminals.

TCI Library: www.telephonecollectors.info

To discriminate between certain bank terminals, some switches are furnished with so-called "normal post" contacts. These contacts are actuated when the shaft reaches certain vertical levels, which thus enables the switch to discriminate between vertical levels. A cam mounted near the top of the shaft can be adjusted to operate these contacts at any desired level or levels.

Since the location of a subscriber's line in in a line group has no relation to the listed number, it may be relocated to other groups as desired.

(2) Line Switches

The line switch method utilizes a forward-facing hunting switch, as shown in Figure 4-10, for each line. A forward-facing switch is one in which there are a multiplicity of outputs for a singular input. The switch may be a plunger switch or a rotary switch but in either case the switch preselects an idle trunk and then establishes a connection to the trunk when attending a subscriber's line. The trunks are connected to first selectors in the distributing stage.

Since the line switch method requires one switch per line, it is at a cost disadvantage compared to the line finder method. As a result, plunger switches are no longer being installed except as additions to existing equipment.

(3) Rotary Switches

Rotary line switches, connected as shown in Figure 4-10, are used to a limited extent for groups of subscribers having a particular class of service, such as post-pay coin lines, which are so small that it would not be economical to use 100-point line finders.

TCI Library: www.telephonecollectors.info

C. DISTRIBUTION STAGE

The network for the originating and terminating distribution stages are essentially similar to each other. The basic distribution network consists of one or more stages of switches known as selectors. The number of selector stages depends upon the number of digits to be dialed and the type of selectors employed.

The selectors (see Figure 4-14) are forward-facing switches operating in the select-hunt mode. Each switch responds to D-C dial pulses at a nominal rate of 10 pps, the number of pulses in the pulse train represents the numerical value of the digit. The brushes are driven upward, one level, for each pulse that it receives. Hence, it will select that level of terminals which corresponds to the digit dialed.

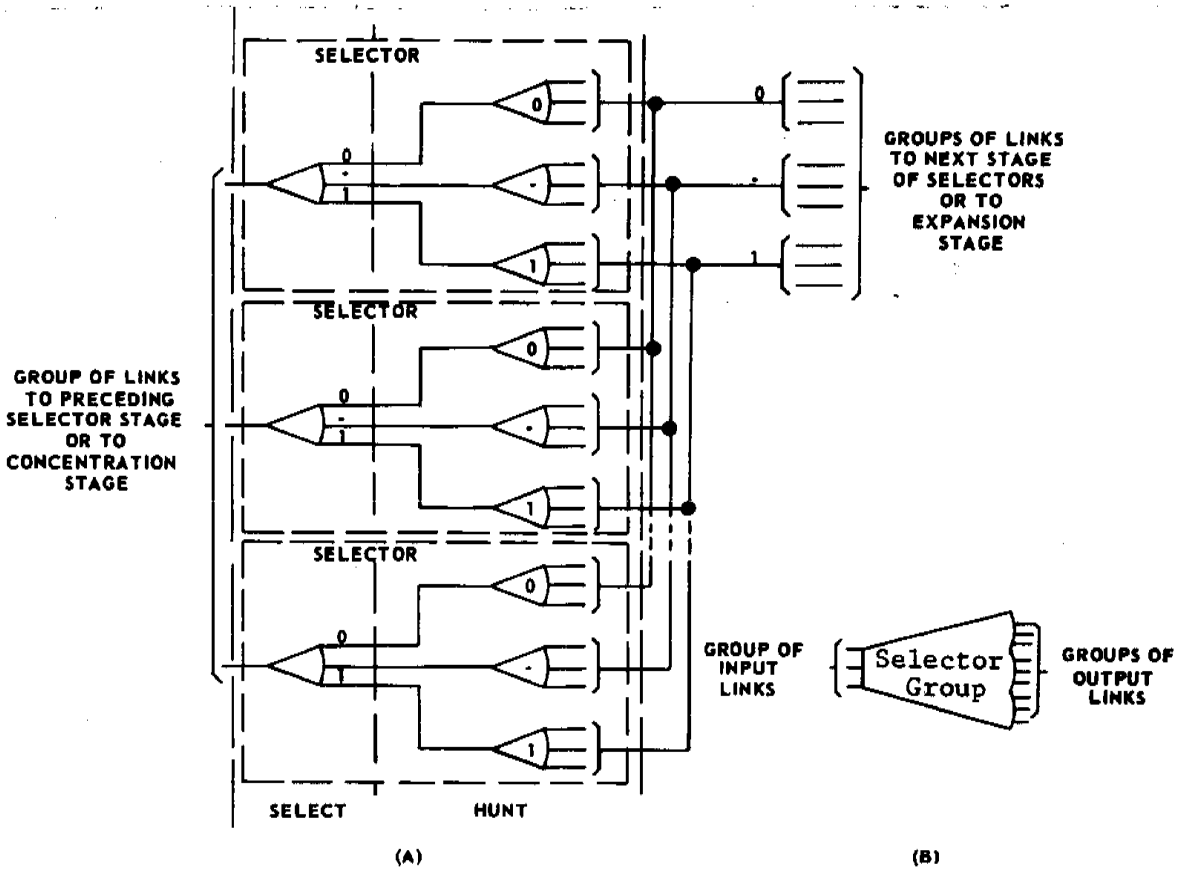

Figure 4-14 A Group of Step-by-Step Selectors in the Distribution Network

TCI Library: www.telephonecollectors.info

Upon selecting a level it will hunt horizontally for an idle terminal, during the interval between digits. After finding an idle terminal, it will cut the connection through to the next switching stage so that the next digit dialed will direct the succeeding switch. If an idle terminal is not found, the selector will step beyond the bank to the "eleventh rotary step" position where path-busy tone will be returned to the subscriber.

With the selector functioning in this manner, each digit dialed requires a selector stage.

The local selector stages are named to indicate the digit to which they correspond; hence, the first and fifth selector stages are controlled by the first and fifth digits, respectively, of the dialed number. Selectors to which incoming trunks connect are termed incoming selectors; i.e., incoming fourth selector.

In order to distribute traffic evenly over the distributing network, the trunks from the line finders are connected to the first selectors in a fixed pattern. The trunk distribution plan is indicated by Figure 4-15.

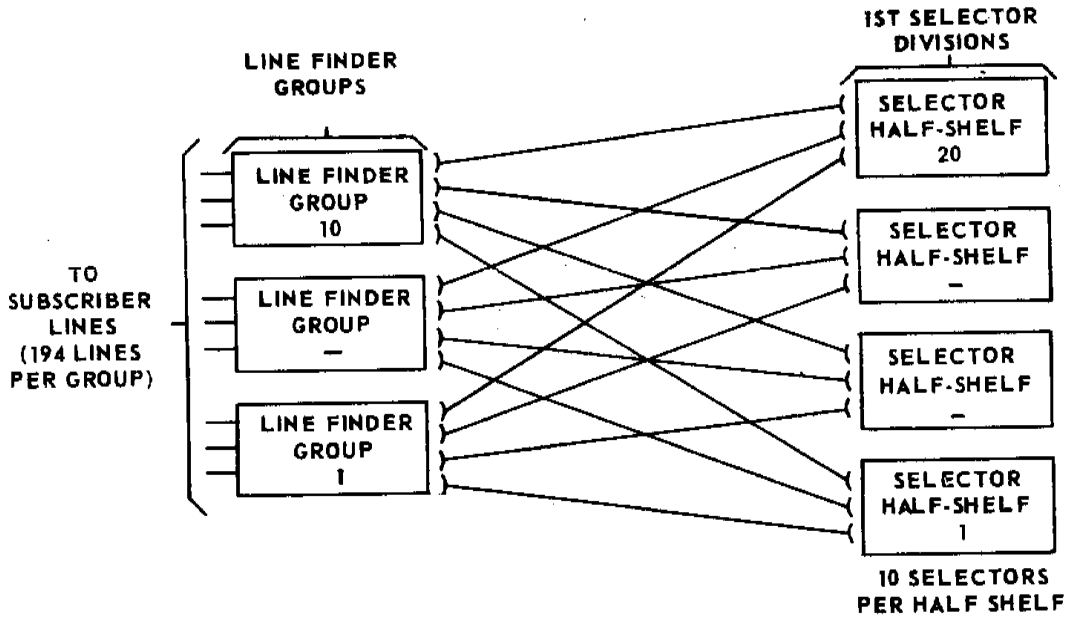

Figure 4-15 Plan for Distribution of Links From Line Finders to First Selector Switches

TCI Library: www.telephonecollectors.info

Selector switches are grouped in accordance with traffic and equipment considerations. The number of switches in a group is equal to the number of inputs which, of course, is dictated by the traffic to be handled. The outputs of a group are multipled and connected by trunks to a succeeding distribution stage or to the expansion stage.

D. EXPANSION STAGE

The purpose of the expansion stage is to connect a smaller number of trunks to a larger number of terminating subscribers. This is accomplished by having the last stage of a call completed through a group of switches known as connectors. The connector is a forward-facing switch operating in the select-select mode under direct control of dial pulses of the last two digits. The switch is shown schematically in Figure 4-16. In operation, the switch steps to the level corresponding to the next-to-the-last digit (tens digit) of the calling number and then steps horizontally to the terminal corresponding to the last digit (units digit). Before connecting to this terminal, it tests to see if the called line is busy. If it is, it returns lines busy tone; if not, it connects to the line, applying the proper ringing signal. When the called line answers, it removes ringing and indicates to the preceding trunks and switches, usually for charging purposes, that the call has been completed.

The subscribers connected to the 100 terminals to which the connector switch has access form a group known as a "connector hundreds group." A "connector hundreds group" is a group of 100 consecutive numbers differing only by their tens and units digits.

The number of switches in each group depends upon the expected amount of traffic and must be equal to the number of trunks from the distributing network. Since the location of each subscriber is exactly the same on the banks of each switch in the group, it is obvious that the banks of all switches in the group must be multipled straight through.

TCI Library: www.telephonecollectors.info

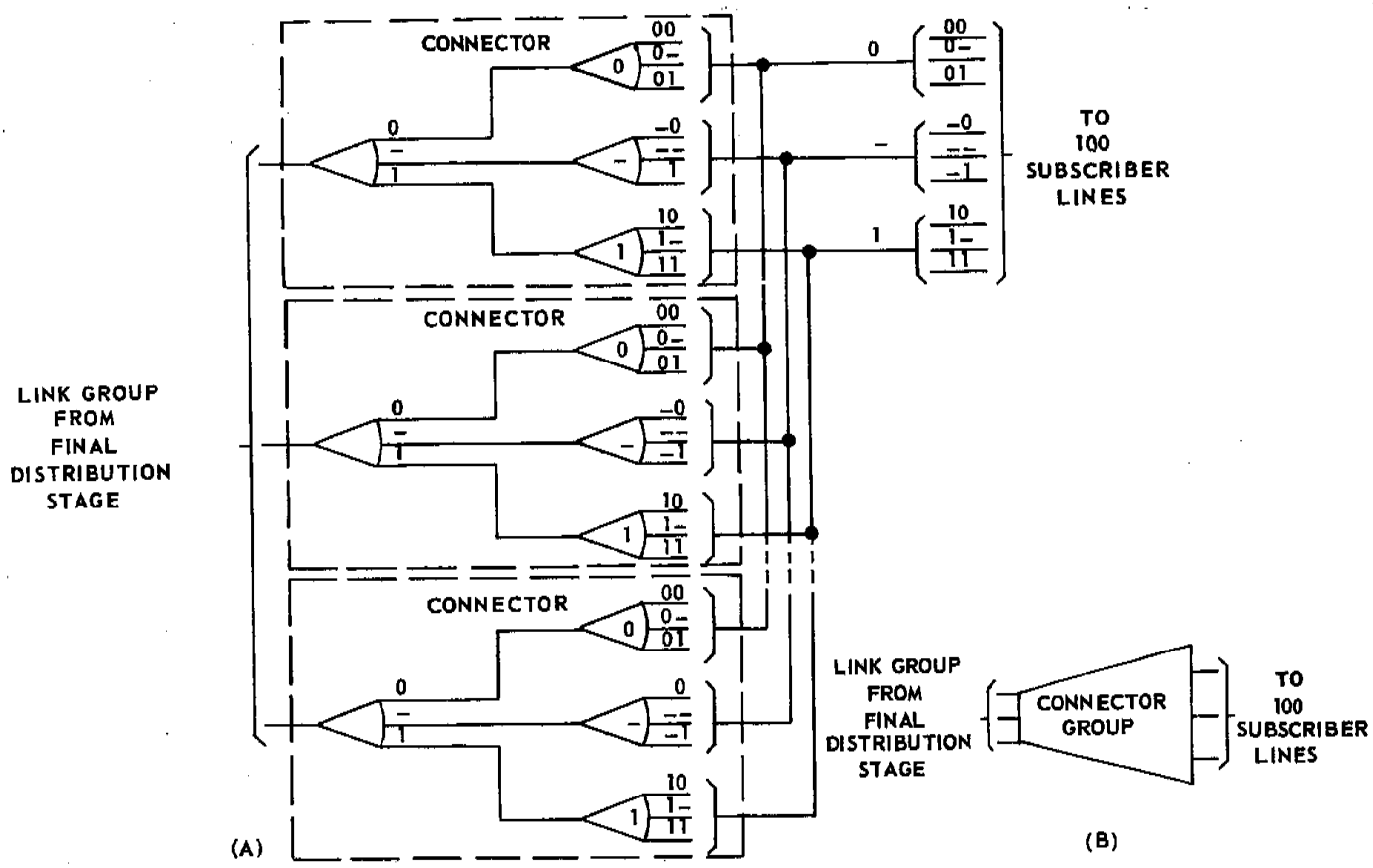

Figure 4-16 Group of Step-by-Step Connectors in Expansion Stage

There are several different types of connectors. They may be categorized as to the type of traffic which they handle: toll, local, or combined toll and local, or according to the types of lines to which they connect: two, four, eight or ten-party; terminals per station or terminals per line, or according to the type of ringing; full or semiselective, code ringing, etc.

TCI Library: www.telephonecollectors.info

Space limitations do not permit discussing the various categories of connector switches except for one important category known as "hunting." A connector operating in the pure select-select mode previously described is called a nonhunting connector. Sometimes a customer will subscribe to several lines but will have only one number listed in the directory. The group of lines is referred to as a PBX group and means are provided so that when the listed number is dialed, a connection is made to any idle line in that group. This is accomplished by a hunting connector.

When the directory number of a PBX group is dialed, a hunting connector selects the dialed terminal. If it is busy, the switch will hunt over successive terminals in the group in a left to right, bottom-up, order.

A rotary hunting connector is arranged to hunt over adjacent terminals on one level only, and may be used for PBX groups of 10 or less lines. Several groups may be located on one level. Level hunting connectors are arranged to hunt successively over terminals on adjacent levels and may be used for PBX groups of up to 100 lines. PBX grouping is accomplished by strapping together a "control" terminal associated with each line. If no idle line is found in the group, line busy tone is returned to the customer.

4.4 THE SWITCHING NETWORK

A. SWITCHING TRAINS

(1) 5-Digit Call

A generalized diagram of a 5-digit office is shown in Figure 4-17. The diagram shows the concentration, distribution, and expansion stages and also indicates the terminations within the network of incoming and outgoing trunks. Actually, the network shown represents three central offices within the same building. These offices have the single digit office codes 5, 6 and 8. Located nearby are two additional offices, 3 and 4.

TCI Library: www.telephonecollectors.info

When a subscriber lifts his receiver to place a call, a line finder having access to this subscriber's line, hunts and connects to the line. The associated first selector is seized and returns dial tone to the subscriber.

The first digit dialed by the subscriber determines which of the five offices the call is for. If the call is for one of the offices in the same building, the first digit drives the first selector to the level corresponding to that office. At the conclusion of the pulse train, the switch hunts over that level for an idle link to a second selector and cuts through the tip, ring and sleeve conductors. This same process is repeated in the second and third selector stages. In each case, the selector must find an idle trunk and cut through to it during the inter-digital time.

After the third selector has found and cut through to an idle trunk, the subscriber is connected to a connector switch. As he dials the fourth and fifth digits of the called number, the subscriber drives the connector to the desired line of the 100 lines it serves. The connection is established as soon as the subscriber finishes dialing. At this point, the connector tests the called line and, if it is idle, connects ringing current to it until the called line answers or the call is abandoned. If the line is busy, the connector returns busy tone to the calling subscriber. It is possible that during the establishment of a connection, a selector switch may have found all available links busy. In such a situation, the selector makes the 11th rotary step and returns an all-paths-busy signal to the subscriber.

If the dialing area contains a large number of lines, the office codes may of necessity be either 2 or 3 digit codes. Each additional digit dialed requires an additional stage of selectors in the switching train.

TCI Library: www.telephonecollectors.info

Each switch unit in the network provides supervisory control over all preceding switches in the train as a connection is being established.

This supervision is relinquished when the next switch in the sequence assumes control. Thus, during conversation, the connector maintains supervision of the entire connection. This connection is held until the calling subscriber hangs up.

(2) 7-Digit Call

(a) Using 7 Switching Stages

Figure 4-18 is a generalized diagram showing the originating portion of an office arranged for 7-digit switching. The diagram shows the concentration and distribution stages involved. The network shown represents 2 central offices within the same building and a portion of the other offices within the local dialing area.

A call progresses through the network in the same manner as a 5-digit call. The switching network contains two more stages of switches, 4th and 5th selectors and the customer must dial a total of 7 digits.

The additional digits are used in the originating network in selecting trunks to the local office or building. Reference to Figure 4-18 indicates that with some calls 3 digits of the office code are used in selecting outgoing trunks and in other calls only two digits of the office code are used, as in the case of codes 23- and 93-. All of the offices using 23 for the first two digits are located in one building. In this case the incoming third selector routes the call to the proper local office.

TCI Library: www.telephonecollectors.info

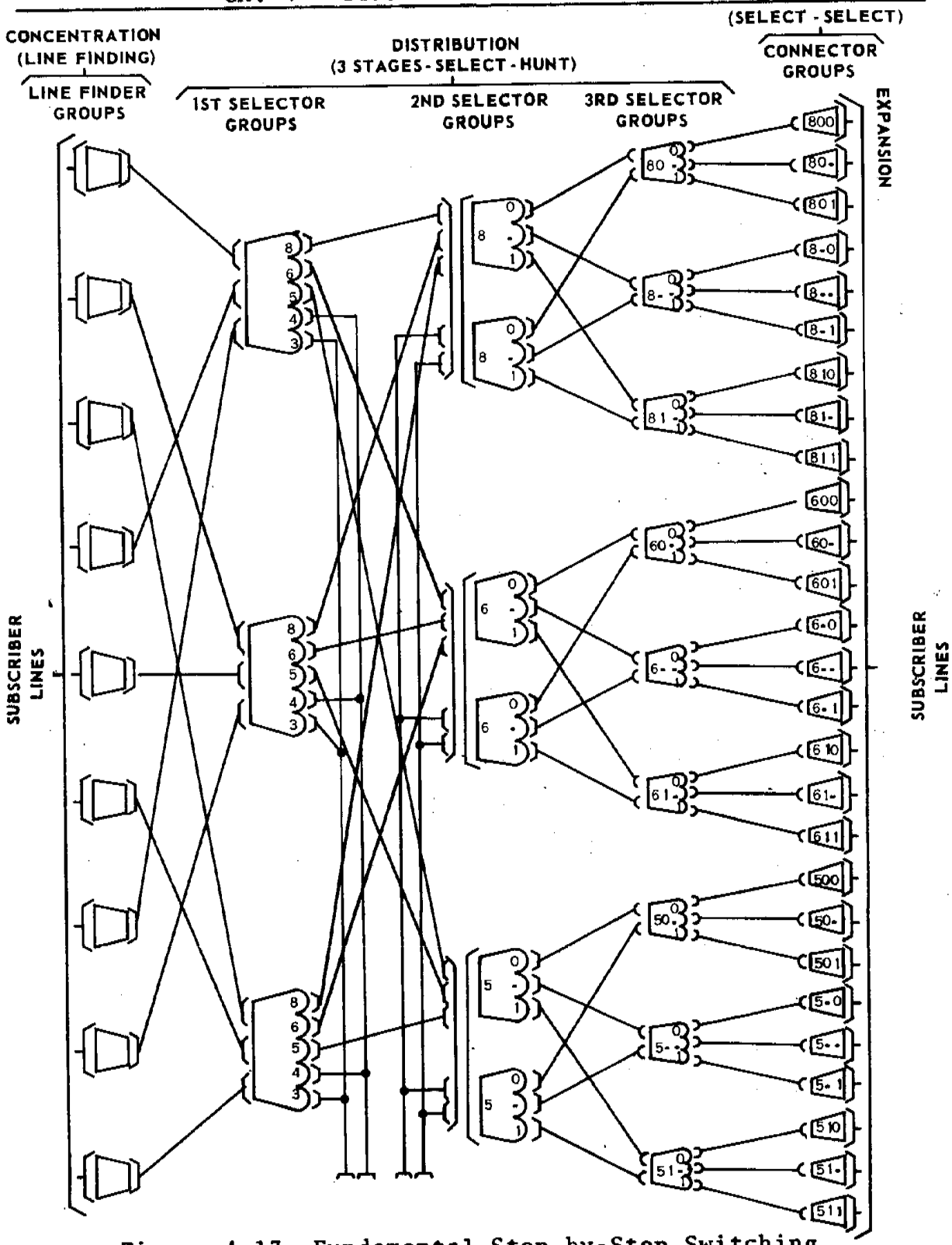

Figure 4-17 Fundamental Step-by-Step Switching Network for 5-digit Office

TCI Library: www.telephonecollectors.info

(b) Using Less Than 7 Switching Stages

The telephone companies have found it desirable to adopt a uniform numbering plan which provides a 7-digit number for all subscribers regardless of the size of the community; however, for smaller communities requiring only four, five or six digits, the 7-digit numbering plan imposes a heavy penality by requiring one, two or three selector stages that are not required from a switching standpoint. The use of selectors known as "digit-absorbing" selector avoids this wasteful practice.

As the name implies, a digit-absorbing selector absorbs digits that are not needed for economical switching but which are needed from the standpoint of uniform numbering. These switches are designed so that when a digit is received which drives the switch to a level marked for absorption, the switch drops back to normal. The levels are marked by bending cams associated with normal post springs.

Levels may be marked for "repeated" absorption and a switch will drop back to normal whenever it is driven to that level. On the other hand they may be marked for "once-only" absorption and the switch will return to normal the first time that digit is dialed but will hunt for an idle terminal on that level the second time it is dialed. Switches may also be marked to absorb on one level on the first digit and on a different level on the second digit.

Digit absorbing switches also provide a feature known as "blocking." When a level is marked for blocking, the switch, if it is driven to that level, will return paths-busy or no-such-number tone unless the switch has previously been driven to a level marked for absorption. This feature is used to restrict service and to prevent wrong numbers.

TCI Library: www.telephonecollectors.info

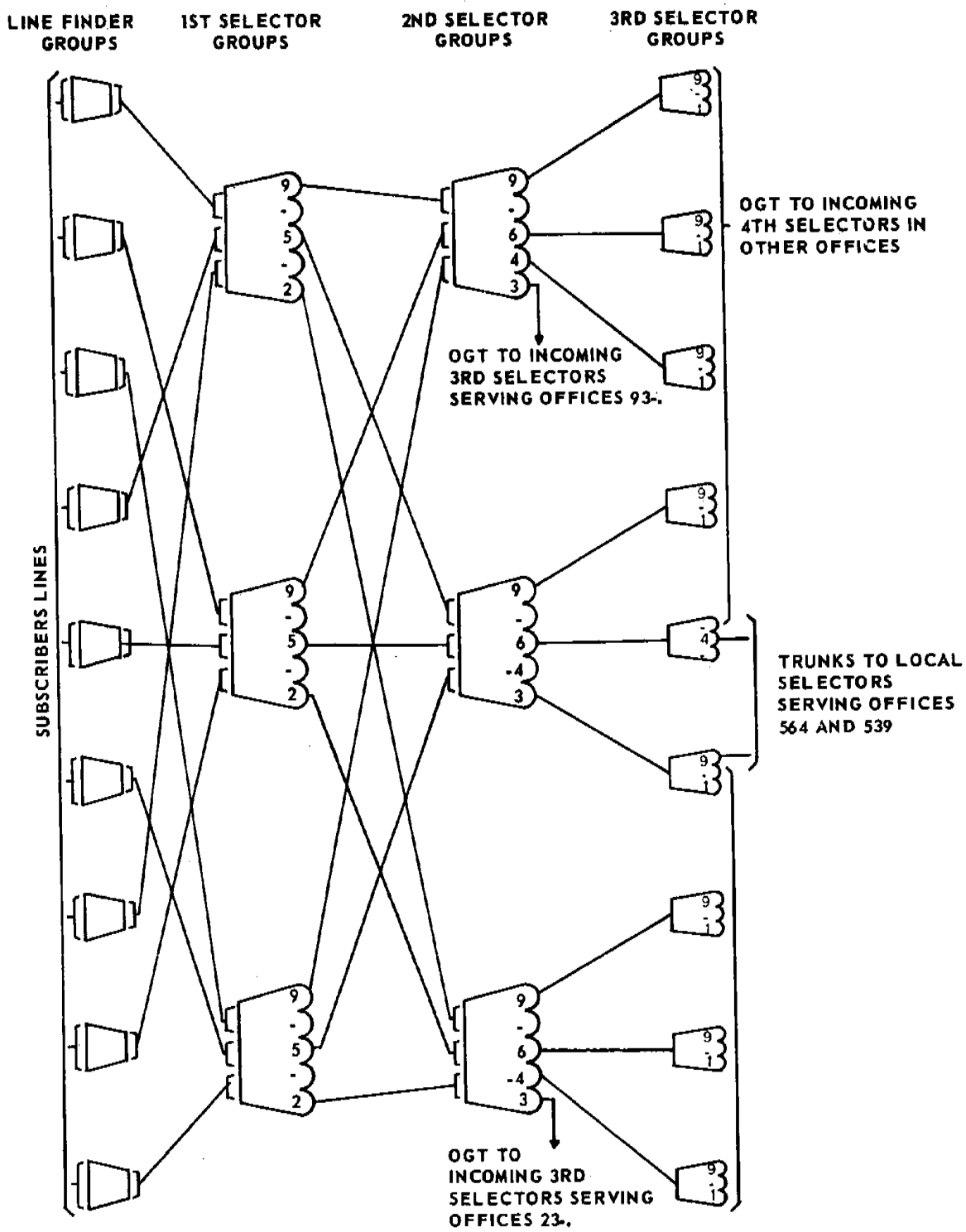

Figure 4-18 Fundamental Step-by-Step Originating Switching Network for 7-Digit Office

TCI Library: www.telephonecollectors.info

The following is an example of a possible arrangement of a two-digit, digit-absorbing selector. Levels 3 and 5 might be specified to absorb and level 6 to block on the first digit (see Figure 4-18); levels 4 and 5 to absorb and levels 0, 1, and 8 to block in the second digit; and to trunk hunt on all levels on the third digit. Assume present office codes with 5-digit effective trunking to be 354 and 545 and with 6-digit trunking to be 328. When code 354 is dialed, the first digit, 3, is absorbed, the second digit, 5, is absorbed, and the switch trunk hunts on the third digit, 4. Similarly, with code 545, the switch absorbs the first two digits and trunk hunts on the third. If code 328 is dialed, the switch absorbs the first digit, 3, and the trunk hunts on the second digit, 2. The third digit, 8, is handled by the succeeding switch (in another office). A nearby office which cannot be dialed from our sample office might have codes 677 and 587. If a customer tries to dial these codes, he will be blocked on the first or second digit, respectively.

(3) 11 X Service Codes

The 11 X codes are used for reporting trouble, requesting assistance, etc. These calls fall in a broad group known as service code calls, the "X" at the end of the code represents a digit between 2 and 0. This digit is preceded by two "1's" in order to distinguish the "X" digit from digits representing office codes.

Figure 4-19 is a line diagram showing how 11 X codes are handled. It can be seen that the first digit "1" received drives the first selector to level 1 where a trunk is seized to an idle service code selector. The service code selector is a digit absorbing selector arranged for repeated absorption of digit "1". Levels 2 to 0 of this selector can not be used unless digit "1" has been absorbed, unlocking the switch. Thus, on a code such as "117" the first selector trunk hunts on the first "1" received. The

TCI Library: www.telephonecollectors.info

service code selector absorbs the second "1" of the code and unlocks the service code selector so it can trunk hunt on the digit "7".

If an accidental jiggling of the switch hook caused a false "1" to be sent ahead of the "11 X" code, the second and third "1's" would have been absorbed in the service code selector. On the other hand, a false "1" preceding an office code, will result in a blocked call.

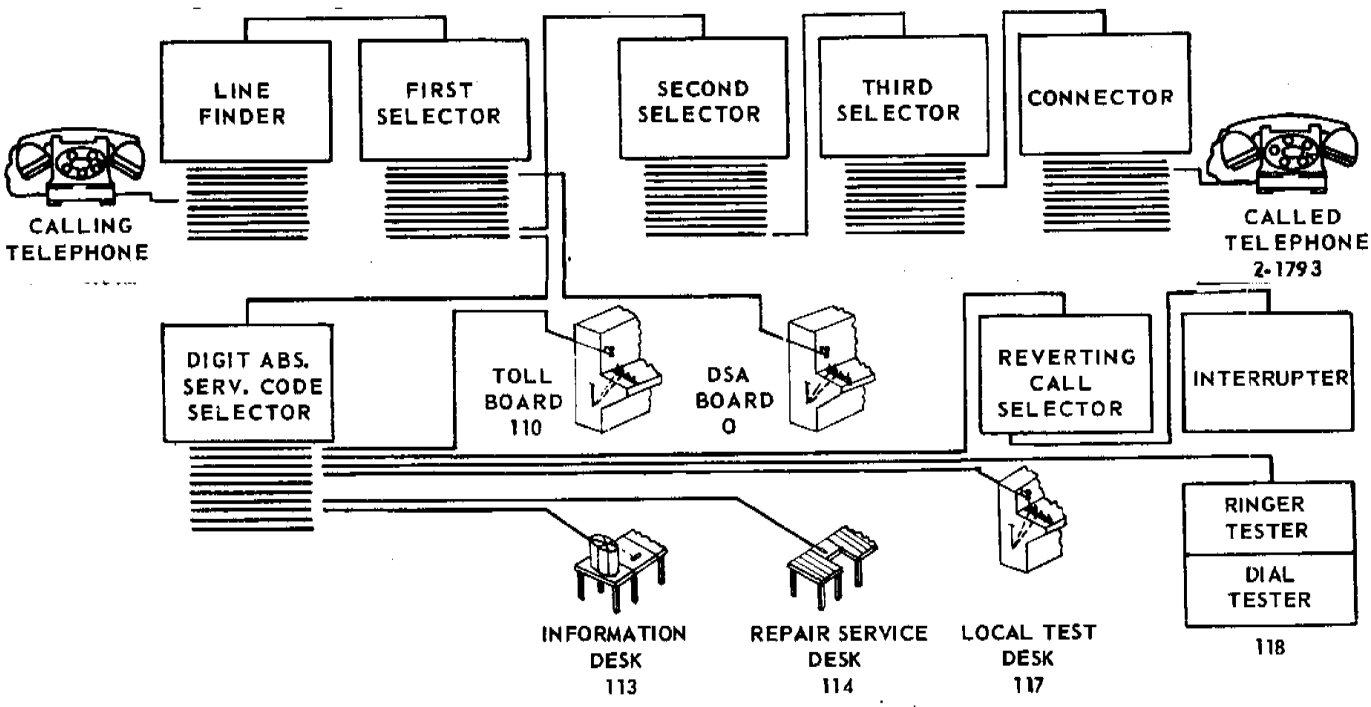

Figure 4-19 Switches, Switchboards, and Desks Used in a Step-by-Step Dial System

TCI Library: www.telephonecollectors.info

(4) One Digit Access

In placing calls into the direct distance dialing network it is necessary to present all 10 digits to the toll switching offices. In Step-by-Step offices this can be accomplished by having the customer dial a "11 X" code followed by the 10 digits required to route the call. With this technique the "11 X" code routes the call through the local office to outgoing trunks to toll.

A more desirable method is to precede the ten digits of the called number by the digit "1". A trunk is located between level 1 of the first selector and the service code selector as shown in Figure 4-20. This trunk has a connection to a trunk to toll as well as a connection to the service code selector. During the interdigital time between 1 and the first digit of the area code, a seizure signal is sent to the toll office, signaling it to prepare receiving equipment for the digits to follow. As the second digit is received it is sent to the toll office as well as to the service code selector.

If the call is a direct distance dial call, the second digit received is some digit other than "1". The trunk circuit recognizes this condition and releases the connection to the service code selector. On the other hand, if the call is a service code call, the second digit is "1"; the trunk recognizes this condition and releases the connection to the toll office.

A direct distance dial call is of the structure "1 X----"; while, a service code call is of the structure "11 X". The trunk permits the call to start routing into both networks; then upon determining if the second digit is a "1" or some other digit, it drops the connection to the undesired network.

TCI Library: www.telephonecollectors.info

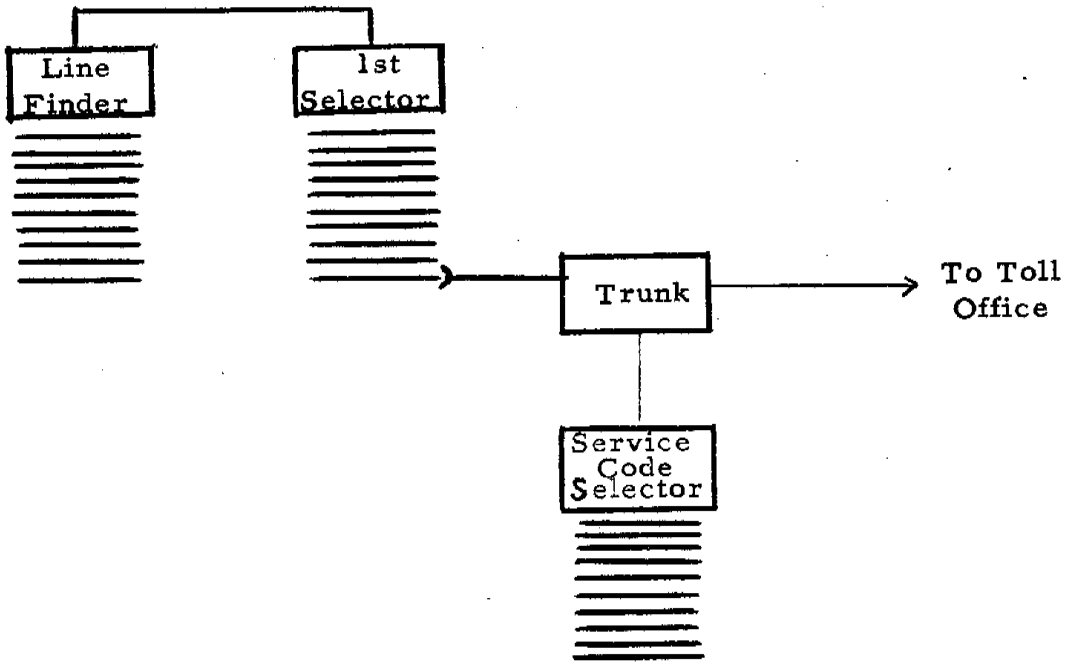

Figure 4-20 Routing For One Digit Access

(5) Toll

Step-by-Step toll switches are used to handle several categories of traffic; which, in general, can be classified as Toll Completing and Intertoll. Toll completing traffic can be defined as the traffic incoming to a local office from a toll operator or intertoll network. Intertoll traffic can be defined as traffic between toll offices.

TCI Library: www.telephonecollectors.info

The Toll Train (Toll Completing traffic) joins the local network at terminals of the connector switches through toll or combination toll and local connectors. The number of toll selector stages preceding these connectors is determined by the number of digits that must be dialed to reach the subscriber's line. Figure 4-21 is a block diagram of a Toll Train.

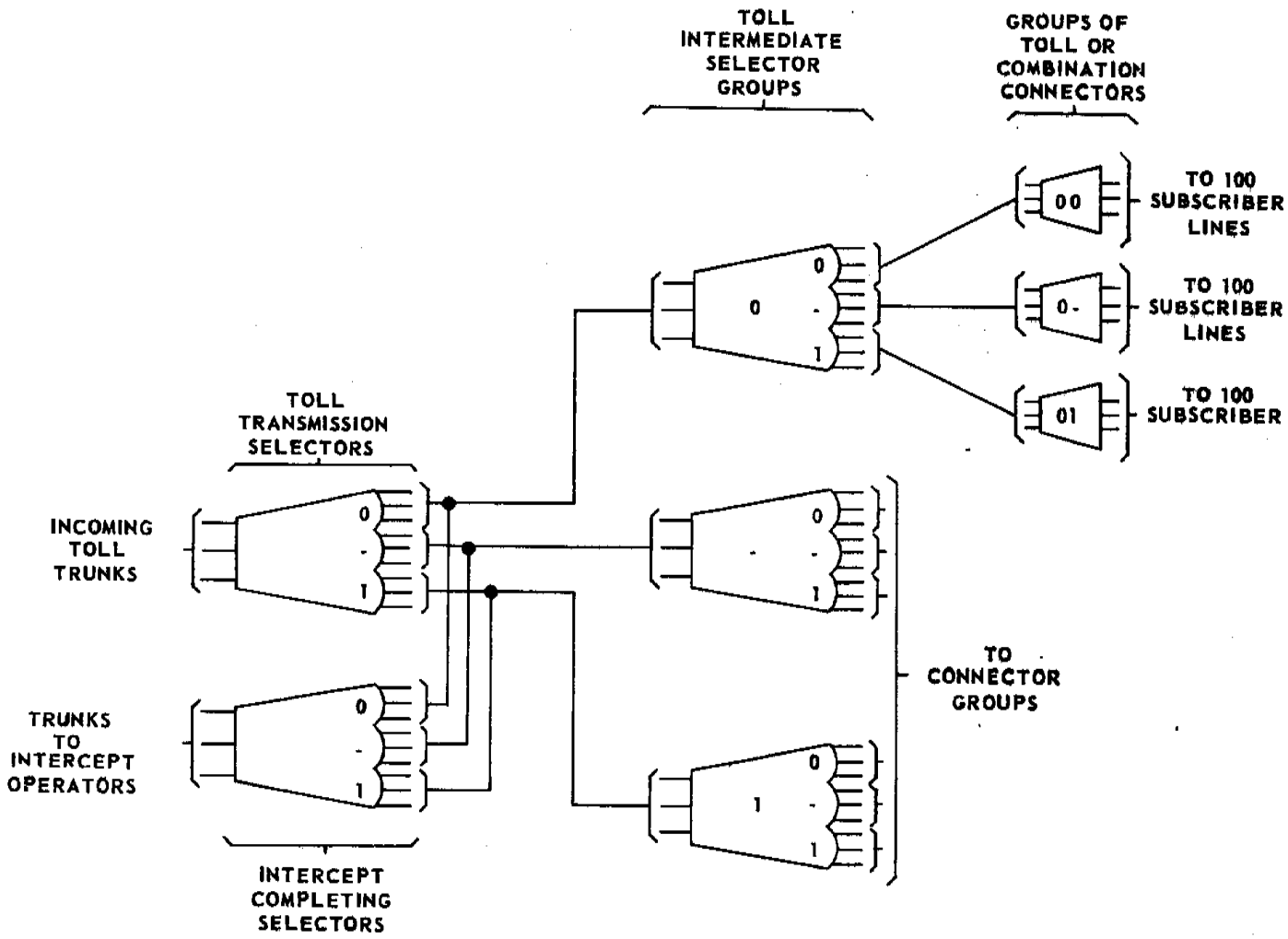

Figure 4-21 Typical Toll Train

TCI Library: www.telephonecollectors.info

The Intertoll Train is used to interconnect toll offices. Calls may be placed into the Intertoll network by operators or by "common control" offices. Likewise, calls can be terminated on toll switchboards or in common control offices. If calls are completed to Step-by-Step customers from the intertoll network, the last stages of the call is handled by Toll Trains. The number of stages of selectors required is determined by the number of outgoing trunk groups that the Intertoll offices have access to. One, two, or three stages may be required as shown in Figure 4-22.

The method of distributing trunks over the toll selector banks is identical to that used for the local selectors. The toll selectors are normally mounted on shelves designed for ten or twenty selectors; all switch banks on a shelf are permanently multipled. The basic selector subgroup, then, consists of ten or twenty switches. The bank levels of these subgroups are interconnected in a graded multiple, the exact arrangement depending upon the number of switch banks in a group and the number of trunks from each group to the succeeding stage.

B. SWITCHING FEATURES

(1) Slip Multiples

The lines are arranged on the switch banks of the line finders as indicated by the diagram of Figure 4-23. The lines which terminate on the tenth level of one line finder switch appear on the first level of the adjacent switch on one side, and on the ninth level of the adjacent switch, on the other side. In a group of twenty, 200-point line finders, for example, each group of twenty lines will terminate on the first level of two switches. The horizontal position of a particular line within the level remains the same on all switches. This method of multipling is known as a "slipped multiple."

TCI Library: www.telephonecollectors.info

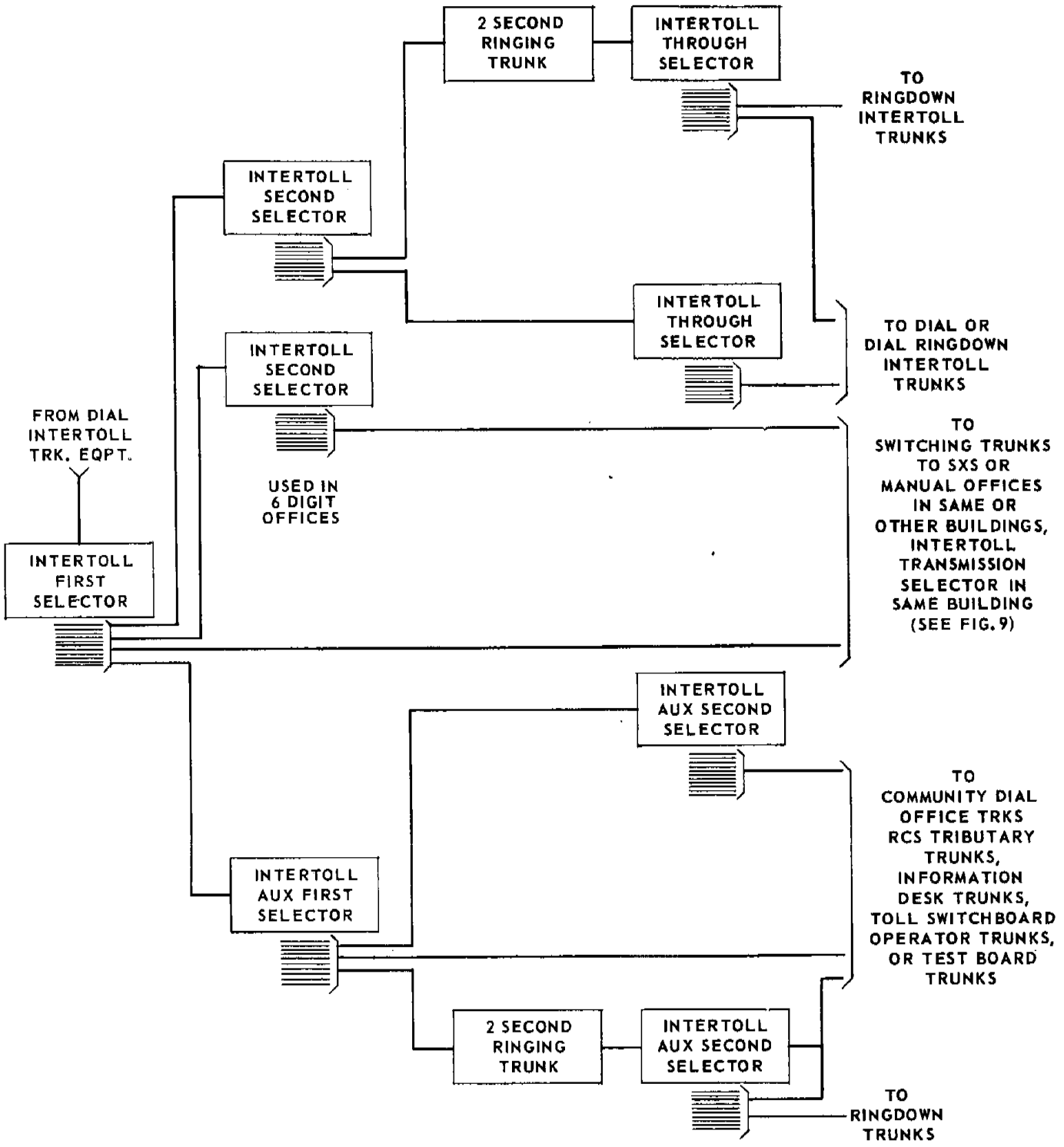

Figure 4-22 Typical Intertoll Train

TCI Library: www.telephonecollectors.info

The line finder group is controlled by an allotting circuit which allots to any call that finder, among those idle, that will find the requesting line on the lowest bank level. Thus, if all finders in the group are idle, a switch having the requesting line on its first level will be allotted to the call.

For charging purposes, subscriber lines served by a step-by-step office are divided into various classes of service such as: flat rate, individual message rate, two-party message rate, coin box, etc. Each class may be further subdivided into lines given extended dialing area service or restricted dialing area service. With certain exceptions, the lines served by a group of line finders must all be of the same class and have the same dialing area service.

(2) Graded Multiple

Selector banks are permanently multipled together in subgroups of ten banks. From an equipment standpoint, a group of selectors must be an integral multiple of ten selectors. From a traffic standpoint, however, fully equipping these subgroups with switches might not be warranted. Hence, while selector groups are fully equipped with banks, they are not necessarily fully equipped with switches.

A switching group has greatest efficiency when every input has access to every output. Figure 4-24 is an example of this arrangement, where every switch has access to every output and the maximum number of outputs depends on the access of the switch. For step-by-step switches, this limit is ten. When the number of inputs increases to the point where the output group is overloaded, the group can be split as shown in Figure 4-25. But smaller groups are less efficient than large ones and splitting the multiple would require increasing the total number of output trunks.

TCI Library: www.telephonecollectors.info

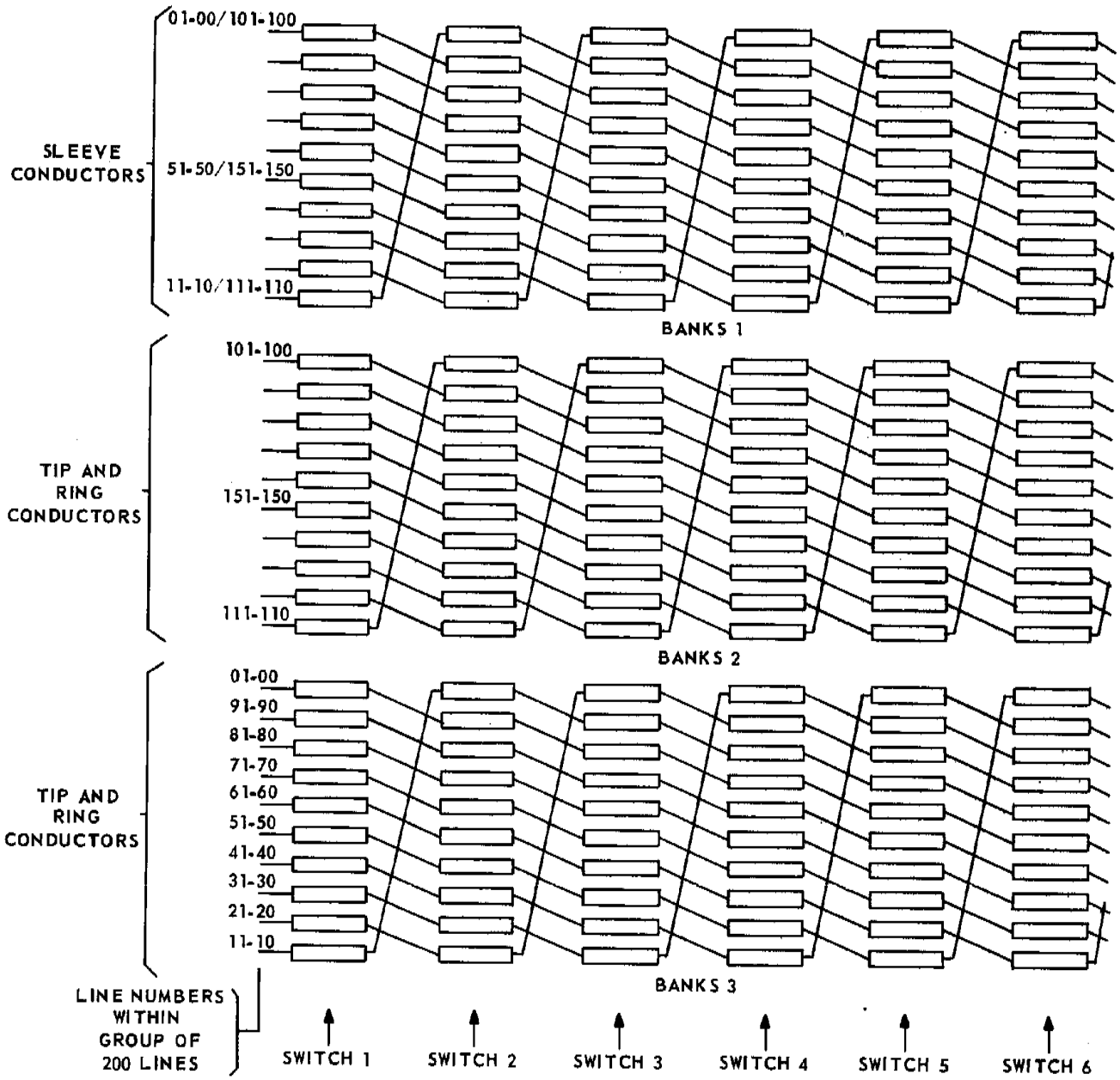

Figure 4-23 Slipped Multiple on Terminal Banks of Line Finder Switches

TCI Library: www.telephonecollectors.info

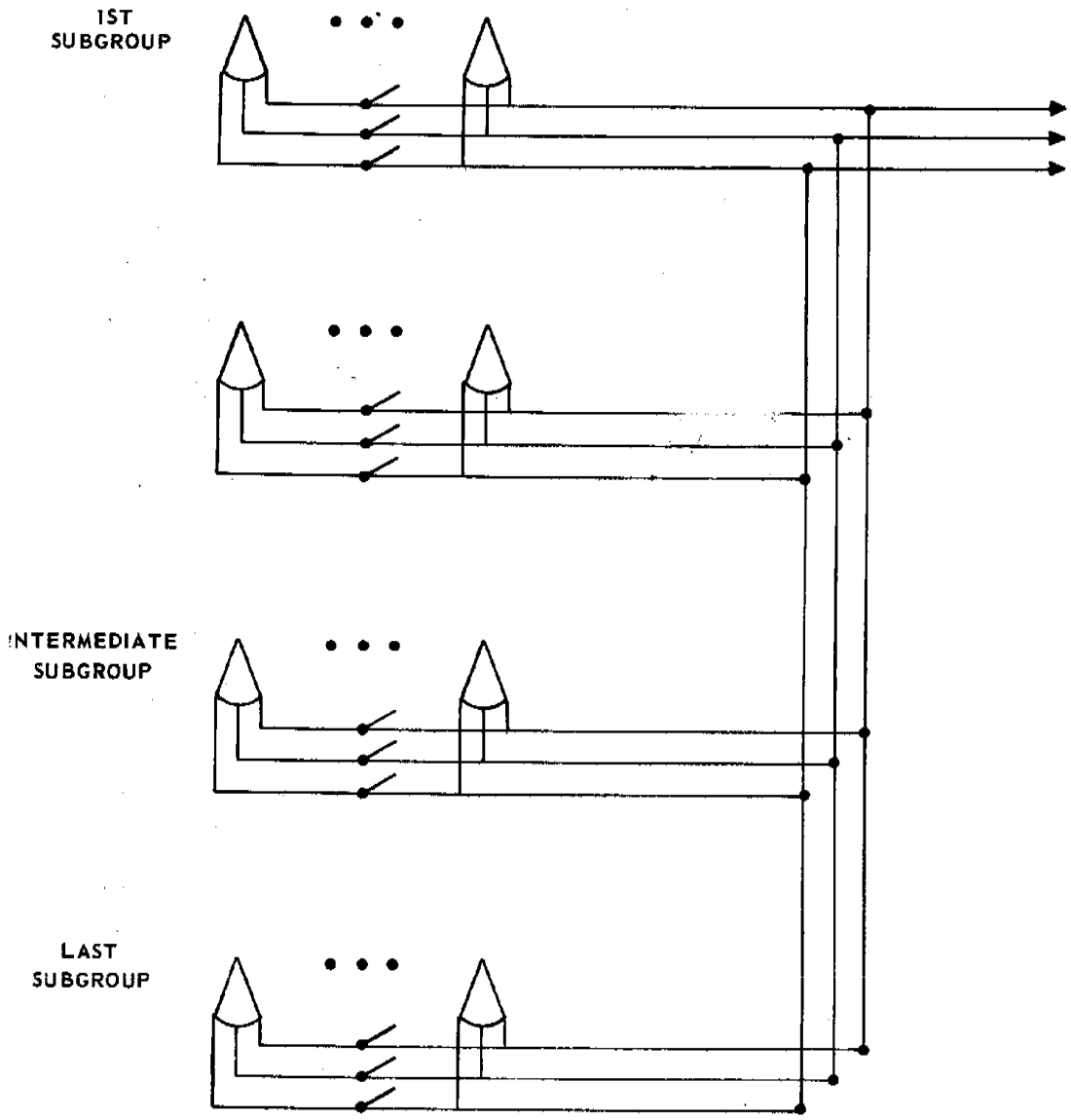

Figure 4-24 Common Multiple to All Subgroups

TCI Library: www.telephonecollectors.info

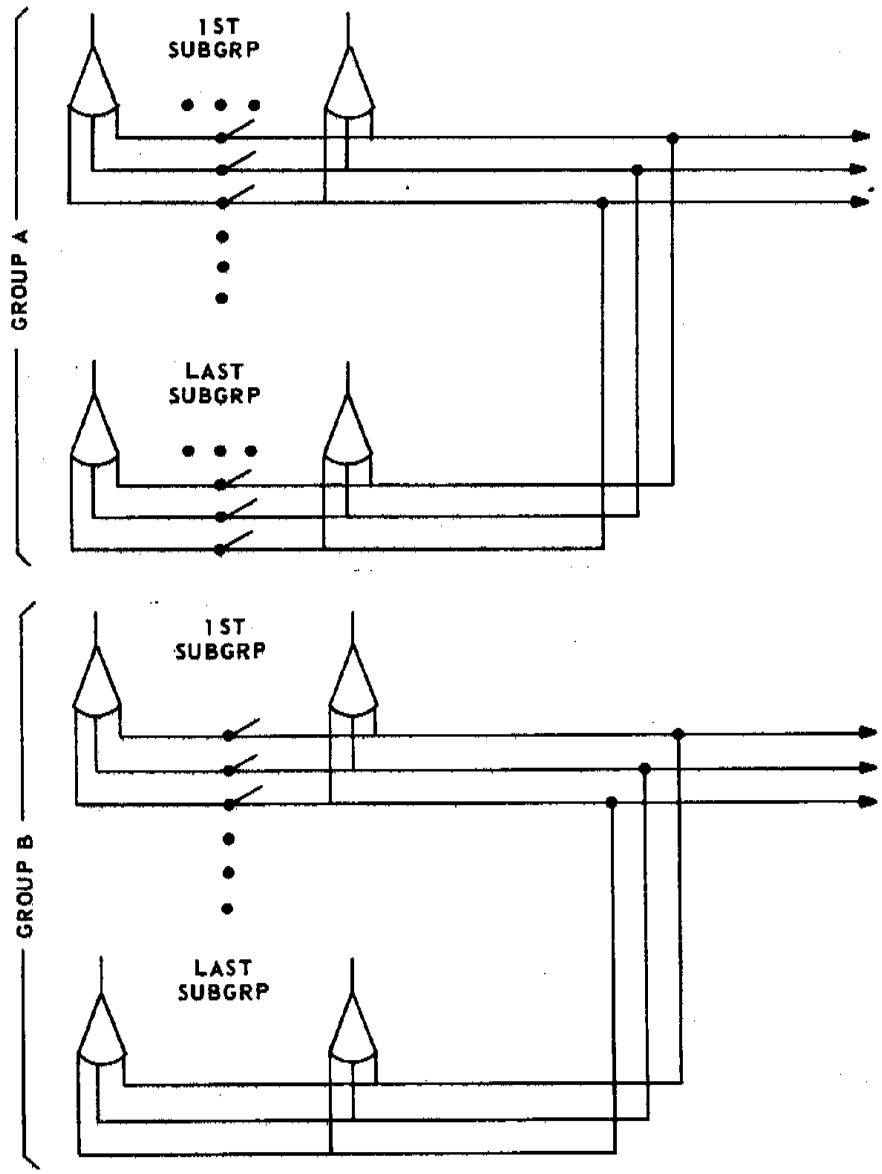

Figure 4-25 Multiple Subgrouped

TCI Library: www.telephonecollectors.info

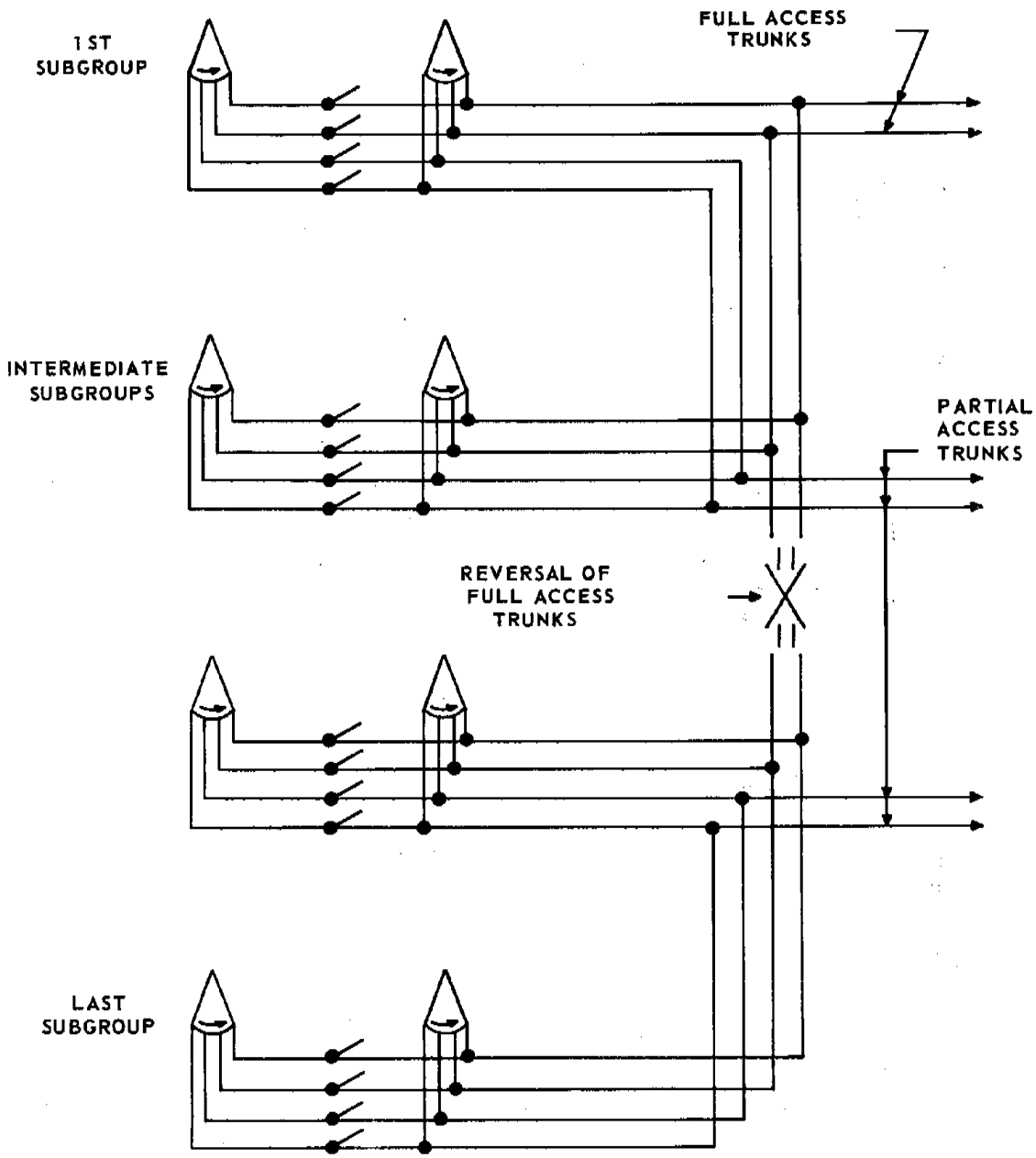

Figure 4-26 Graded Multiple

TCI Library: www.telephonecollectors.info

This situation is improved by employing graded multiples as shown in Figure 4-26. With this arrangement, there is full access to only a fraction of the trunks. The graded multiple may be thought of as a combined full access and split multiple. It is a compromise dictated by limited access switches, not as efficient as a full access multiple, but more efficient than a split multiple.

(3) Rotary Out Trunks

Traffic between local step-by-step offices leaves the originating office on outgoing trunks from the first, second or third selector stages. This traffic is distributed over the various groups and subgroups of the selector bank multiples.

Each of the above subgroups must be engineered for a given quality of service during its peak load condition. The total trunks required from all of the subgroups of trunks to a particular destination is greater than would be required if the traffic could be concentrated in one large group of trunks. The difference in the total number of trunks required by using one large group is of considerable importance from an overall cost standpoint since trunks between offices represent considerable plant investment compared to trunks within an office.

The use of Rotary Out Trunks is one method of reducing the number of interoffice trunks to the theoretical minimum. In essence, the rotary out trunks are a distribution stage between the selector terminals leaving one office and the incoming selectors of the terminating office. Approximately 40% of the outgoing trunks are connected directly to the terminating office. These trunks are in the individual subgroup portion of the graded multiple. The remaining 60% of the outgoing trunks are connected to the rotors of Rotary Selector Switches. The banks of the Rotary Selector Switches are connected to

TCI Library: www.telephonecollectors.info

the previously mentioned individual trunks as well as to enough other outgoing trunks to meet traffic requirements. Figure 4-27 shows this arrangement between two offices; office 2 and 3.

With this technique the rotary selectors have access to individual trunks from a number of subgroups as well as what would normally be called common trunks. The banks of the rotary selectors are multipled; thus, we have a distribution stage that in effect groups a number of small groups into a larger group for greater efficiency.

The connection through the rotary selector must be established during the interdigital timing period but after the previous selector completed its rotary hunt. In order to avoid traffic blockage due to two rotary hunts during one interdigital timing interval, the rotary out trunk is always positioned on an idle outgoing trunk. Whenever a trunk that has been preselected by the rotary selector is seized by some other selector, another idle trunk is preselected. The rotary hunting action of the rotary selectors is stopped during an all-trunks-busy condition to prevent the selectors from continuous hunting action.

4.5 PROGRESSIVE CONTROL TECHNIQUES

A. GENERAL

(1) Direct Progressive Control

The system examined so far has various disadvantages inherent in direct progressive control systems.

First, since signals generated by the calling subscriber's device are received directly by the switching device, improvements involving major changes in control signaling cannot be made to one device without being made to the other. This limitation in signaling flexibility

TCI Library: www.telephonecollectors.info

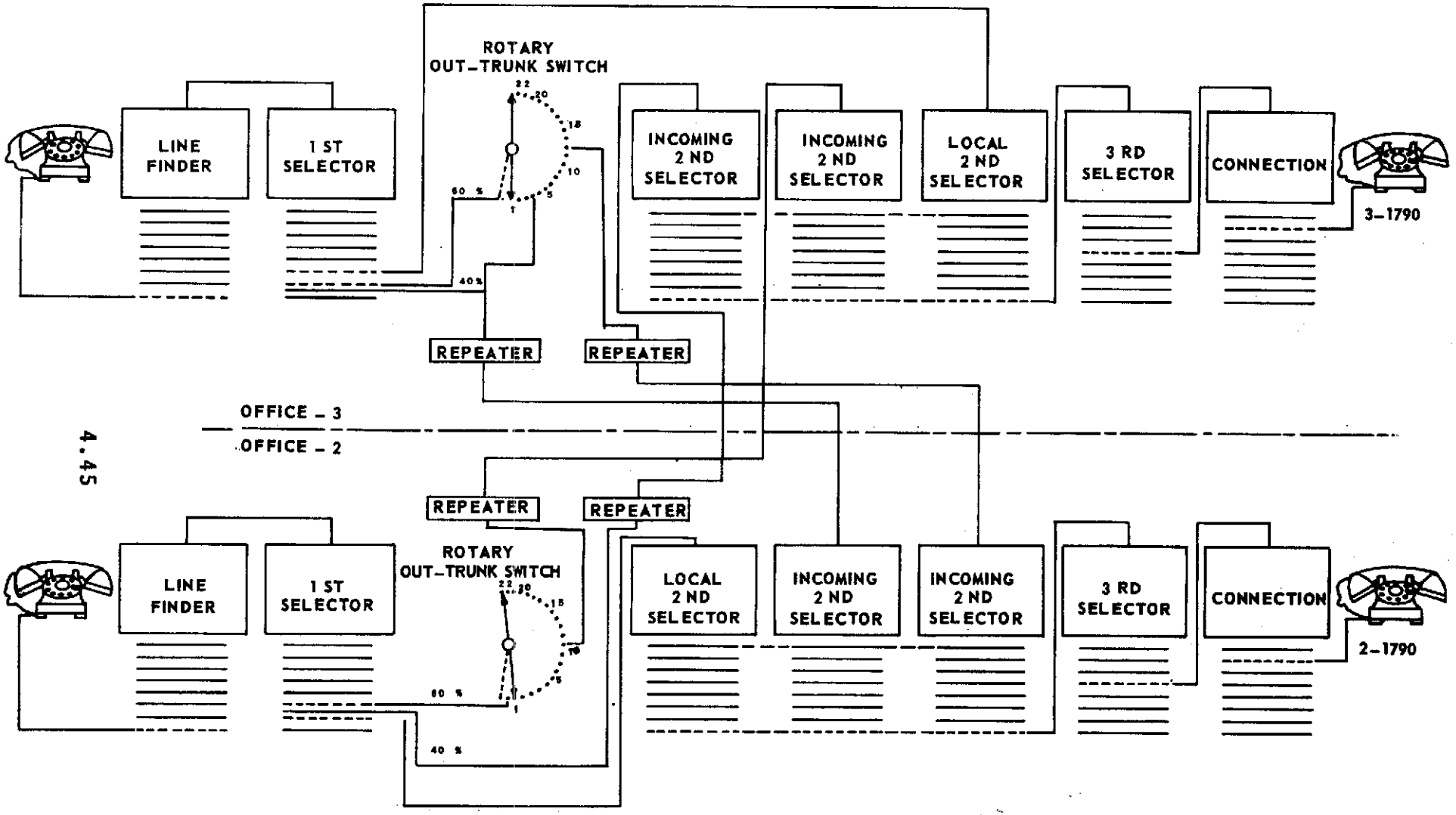

Figure 4-27 Trunking Using Rotary Out Trunks

TCI Library: www.telephonecollectors.info

has been brought sharply into focus by the introduction of touch-tone calling since the tone signals generated by the subscriber are not compatible with existing switches and it is not economically feasible to modify or replace the huge number of switches involved.

Second, the assignment of a numeric code to a subscriber specifically fixes the location of his line in the terminating stage. Similarly, assigning a numeric code to associated offices specifically fixes the location of the trunk groups to those offices in the distribution stage of the network. Extreme care is required to properly assign these codes to provide economical trunking and to insure against serious traffic imbalances or poor trunking arrangements. Also, subscribers are reluctant to have their numbers changed and it is not practical to reassign office codes to control the routing.

Third, since the switches are directly controlled by the subscriber, a signal must be generated by the subscriber for each "node" or switch in the tree-like structure of the switching network. When step-by-step intertoll facilities are used for long distance calls, from one to three switches are required at each intertoll office. When a call requires that several intertoll offices be connected in tandem, several digits must prefix the called subscriber's number in order to select the proper path through the intertoll network. Obviously this does not lend itself to the uniform dialing procedures required for direct distance dialing.

Fourth, the progressive buildup of a path through the network under the direct control of the subscriber, makes it impossible to try an alternate route if, as the path progresses, a blocked point in the network due to an all trunk busy or a trouble condition is encountered. Under this condition the call must be abandoned and another attempt made to complete the connection. This is a serious limitation.

TCI Library: www.telephonecollectors.info

(2) Register Progressive Control

In order to overcome certain of these limitation, various methods have been developed which provide, partial or full register progressive control for step-by-step systems. The step-by-step intertoll CAMA facilities is one such facility. Two other recent developments, common control and "noncompatible" touch-tone calling, also utilize register progressive control in local offices.

B. COMMON CONTROL

"Common Control" has been previously defined in terms of a switching system principle. It may also be defined, from a circuit viewpoint, as a control common to more than one switching device. When used in this context, common control circuits are used in progressive control systems.

Controlled outpulsing permits, translation, code conversion, alternate routing, multifrequency outpulsing and permanent signal routing. In addition, these facilities are compatible with the facilities needed to accept Touch-Tone signals. Hence, common control may be furnished to provide either Touch-Tone calling or controlled outpulsing or both. If only one of these features is originally provided, the other may be added at a later date by providing compatible features initially.

(1) Controlled Outpulsing

A block diagram of common control facilities is shown in Figure 4-28. When a customer lifts his receiver, a line finder begins to hunt for his line. At the same time the register trunk and link connects a register to the register trunk associated with the line finder. The register trunk splits the tip and ring between the line finder and first selector and extends the subscriber's loop to a relay in the register. A pulsing path is also extended from the register to the first selector. Dial tone is then supplied by the register to the subscriber who

TCI Library: www.telephonecollectors.info

may be calling from either a dial or a Touch-Tone telephone. If the call is from a dial pulse subscriber, the register repeats the digits over the pulsing path to the first selector. If the call is from a Touch-Tone service subscriber, no dial pulses are given to the first selector at this time.

When three digits are stored (four, if a 0 or 1 prefix digit is received) the register bids for, and connects to, a translator and decoder through their respective connectors. The trunk class connector also connects to the decoder and passes the calling customer's class of service. Having determined the code dialed and the class of service, the decoder informs the register and outpulsing controller if controlled outpulsing is required, and, if so, how it is to be handled.

It should be remembered that before the decoder has determined whether or not controlled outpulsing is required, three or four digits will have already been repeated to the distributing stage, and a switch train will have been partially established. On those few calls which do require controlled outpulsing, the established switch train is dropped by the register. The decoder then provides the register and outpulsing controller with the following information:

1. The arbitrary digits which must be prefixed to the dialed number for routing or code conversion.
2. The number of digits to delete from the called number.
3. Which digits, if any, require MF pulsing.
4. The number of digits it must outpulse before releasing.
5. Whether an alternate route is available (so that the decoder can be recalled if on all trunks busy condition is found).

The translator and decoder now release and the required digits are outpulsed, after which the register trunk cuts through; the originating register and outpulsing controller then release.

TCI Library: www.telephonecollectors.info

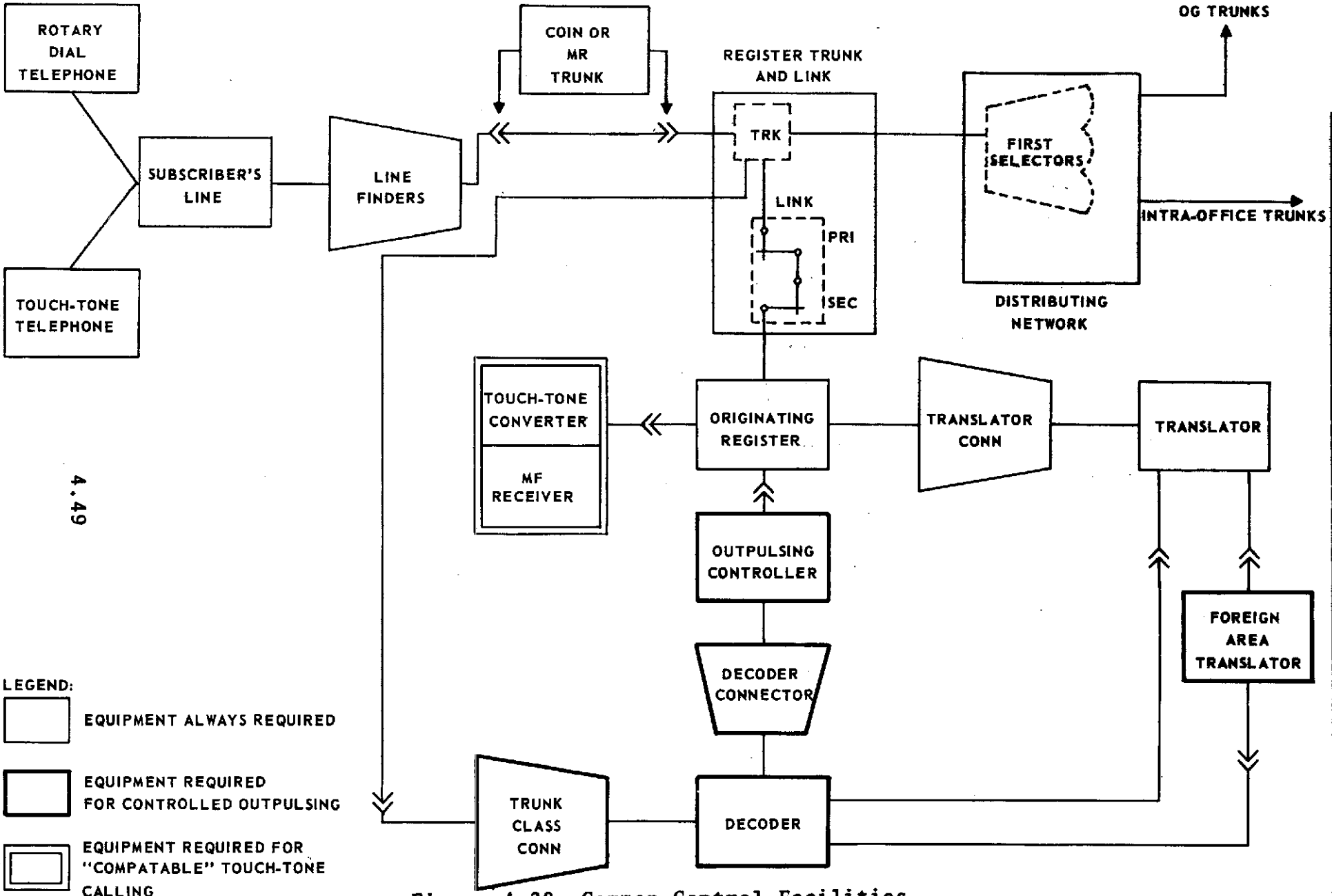

Figure 4-28 Common Control Facilities

TCI Library: www.telephonecollectors.info

However, if controlled outpulsing was not required, the action taken by the register, after the translator releases, would depend on the type of pulsing received.

When signals from a Touch-Tone phone are received, the digits are detected by the Touch-Tone converter and stored in the register. The register then generates and outpulses dial pulses to match the digits stored in its memory relays. At completion of outpulsing, the register and link release.

In dial pulsing, after the register repeats the pulses to the first selector, the register releases itself and the link during the inter-digital timing interval.

The register trunk then completes the pulsing path from the line finder to the first selector so the customers dial now controls the remaining switching stages in conventional manner.

(2) TOUCH-TONE Calling Without Controlled Outpulsing

Compatible Touch-Tone calling can be furnished initially and at some later date modified to add controlled outpulsing. In this case the equipment shown in the heavy solid line of Figure 4-28 is not required until the controlled outpulsing features are added.

Only those line groups having subscribers with Touch-Tone calling will require the register control equipment.

(a) Calls from Dial Pulse Subscribers

If dial pulses are received, the register repeats them to the first selector and then releases during the interdigital time between the first and second digit. The remainder of the digits are fed to the network on a direct progressive control basis.

TCI Library: www.telephonecollectors.info

(b) Calls from Touch-Tone Service Subscribers

If signals from a Touch-Tone phone are received, the converter and its associated receiver translate the tone signals into D-C signals and store the digits on memory relays in the register. After the first digit is stored, it begins to pulse the digits to the distributing stage at the standard rate of 10 pps.

When three digits are stored (four, if a 0 or 1 prefix digit is received) the register bids for and connects to a translator which tells it how many digits it must receive. When the required number of digits have been outpulsed, the register trunk cuts through and the originating register releases.

C. NONCOMPATIBLE TOUCH-TONE CALLING

In offices in which it would never be economically feasible to provide controlled outpulsing, a cheaper method of accepting signals from a Touch-Tone phone is available. This method is variously referred to as "noncommon control" or non-compatible" Touch-Tone calling. "Noncompatible" because this method cannot be modified to operate with controlled outpulsing. "Noncommon Control," strictly speaking, is a misnomer since this equipment does control several switching devices. However, the term control, when used in step-by-step, refers to the special case of controlled outpulsing.

This arrangement, shown in Figure 4-29, is similar to that described for "compatible Touch-Tone calling only" except that access is obtained through converter trunks and finder switches instead of a register trunk and link. In addition, the functions of the originating register and translator are built into the converter. This equipment is furnished only for those line groups having some subscribers with Touch-Tone service. When a subscriber lifts his receiver, a line finder seizes the line; the converter trunk recognizes that this is a new call and directs a trunk finder to connect to it. In smaller offices the trunk finder connects directly to a converter; but in offices with a large number of converters, increased efficiency is obtained by using converter finders which hunt for, and connect to, idle converters.

TCI Library: www.telephonecollectors.info

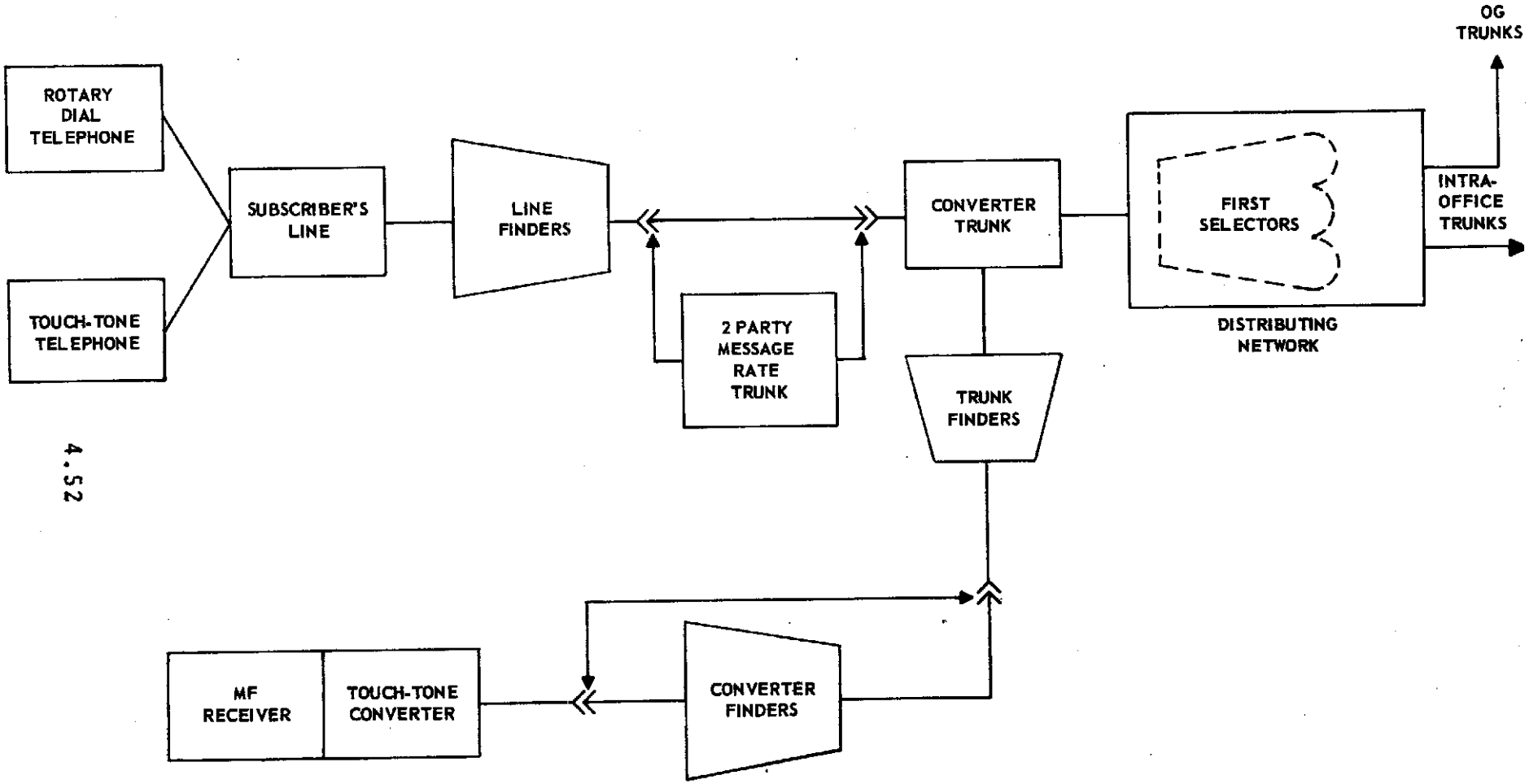

Figure 4-29 "Noncompatible" TOUCH-TONE Calling Facilities

TCI Library: www.telephonecollectors.info

The converter trunk splits the tip and ring leads between the line finder and first selector and establishes a connection through the trunk finder and converter finder, when provided, to a supervisory relay in the converter. The converter now furnishes dial tone to the customer.

If the call is from a dial telephone, the pulses of the first digit are repeated by the supervisory relay to the first selector, the converter releases during the interval between the first and second digit and the converter trunk connects tip and ring through to the first selector. The remainder of the digits are fed directly to the network on a direct progressive control basis.

When a customer having Touch-Tone calling originates a call, the converter and associated receiver translate the tone signals to D-C signals, stores them on memory relays and outpulses the digits to the distributing network. After the last digit is outpulsed, in a manner similar to that previously described for the originating register, they both release.

The modest amount of translation built into the converter enables it to minimize its holding time by recognizing the number of digits it must outpulse. However, the converter does not control the digits which are pulsed out, except in the case of permanent signals. Under this condition digits are pulsed which route the call to permanent signal holding trunks. Like the originating register the converter times out, returns recorder tone, and releases, if it has not completed a call in a specific allotted time.

TCI Library: www.telephonecollectors.info

CHAPTER 5

PANEL SWITCHING SYSTEM

5.1 INTRODUCTION

The panel system is a local dial switching system that was developed so that dial operation might be applied in large metropolitan areas where the number of central offices to be served created complicated trunking problems. In the panel system, direct control of the switches by the subscribers' dial is abandoned in favor of a register or sender in which the dialed pulses are stored until the equipment is ready to use them. This allows the selecting apparatus more time to hunt over large trunk groups than is normally permitted between the digits dialed by a subscriber. The system is applied only in the larger areas because it does not compete economically with the step-by-step system in exchange areas with a small number of central offices or in communities with only a small number of subscribers lines.

5.2 APPARATUS ELEMENTS

A. PANEL SELECTORS

In order to understand fully the operation of the panel type dial system it is necessary to study the mechanical details of the various pieces of apparatus. The principal piece of apparatus which gives the system its name is the panel type selector, so called, because the terminals over which the selector passes, are arranged in a flat rectangular bank or panel. This is used throughout the system in various forms, differing in size, in detailed arrangements and in electrical connections, but all having the same general mechanical construction. We will begin by considering the general construction and describe later the detailed differences which distinguish the various selectors.

Figure 5-1 is a general view of a selector frame. It will be observed that all apparatus is mounted upon a structural iron framework securely bolted to the floor and to the ceiling. In Figure 5-1 there will be seen several banks of terminals mounted one above the other.

TCI Library: www.telephonecollectors.info

Figure 5-2 shows one of these banks removed from the frame. It consists of flat strips of brass having projecting lugs, separated by strips of insulating material and clamped together by long bolts passing through holes in all of the strips. The lugs are so arranged that they project on both sides of the bank and are repeated thirty times on the front and thirty times on the rear of each strip. A set of three strips constitutes the terminals of one line or trunk and they are designated "tip," "ring" and "sleeve" terminals as in manual practice.

The terminals of the lines or trunks then appear in vertical rows, each row containing 100 lines or trunks in each bank and there are thirty such rows on the front and thirty on the rear, so that, each line or trunk appears sixty times in each bank. Connections to the lines or trunks are made by wire soldered to lugs at one or both ends of the bank. In actual practice, in those selector frames where these terminals represent trunks, only 90 of the 100 possible trunks in each bank are used as trunks, the remaining 10 being required for other purposes.

The selectors consist of hollow brass rods, one mounted opposite each vertical row of three terminals and arranged to slide up and down. Since there are 60 vertical rows, 60 selectors can be accommodated on each frame, 30 on each side. The selector tubes carry sets of spring fingers or "brushes" in front of each bank which may be made to rub on the terminals when the selector is driven up or down. Connections from the brushes are carried through the rods to sliding contacts at the top.

In the middle of the frame at the bottom are long rolls covered with cork composition which are constantly revolved by an electric motor through the medium of gears. The lower roll rotates in such a direction as to drive the selector upward and the upper roll in the opposite direction to drive the selector downward. Each selector tube is attached at its lower end to a flat strip of bronze called a "rack," which normally stands just in front of the revolving rolls but not touching them. In front of each rack is an electro-mechanical device called a "clutch." A separate clutch, selector rod and drive unit are shown in Figure 5-3. When an electric current is passed through one of the magnets of the clutch, a roller attached to its armature presses the rack against one of the revolving cork covered rolls which, by friction, moves the selector up or

TCI Library: www.telephonecollectors.info

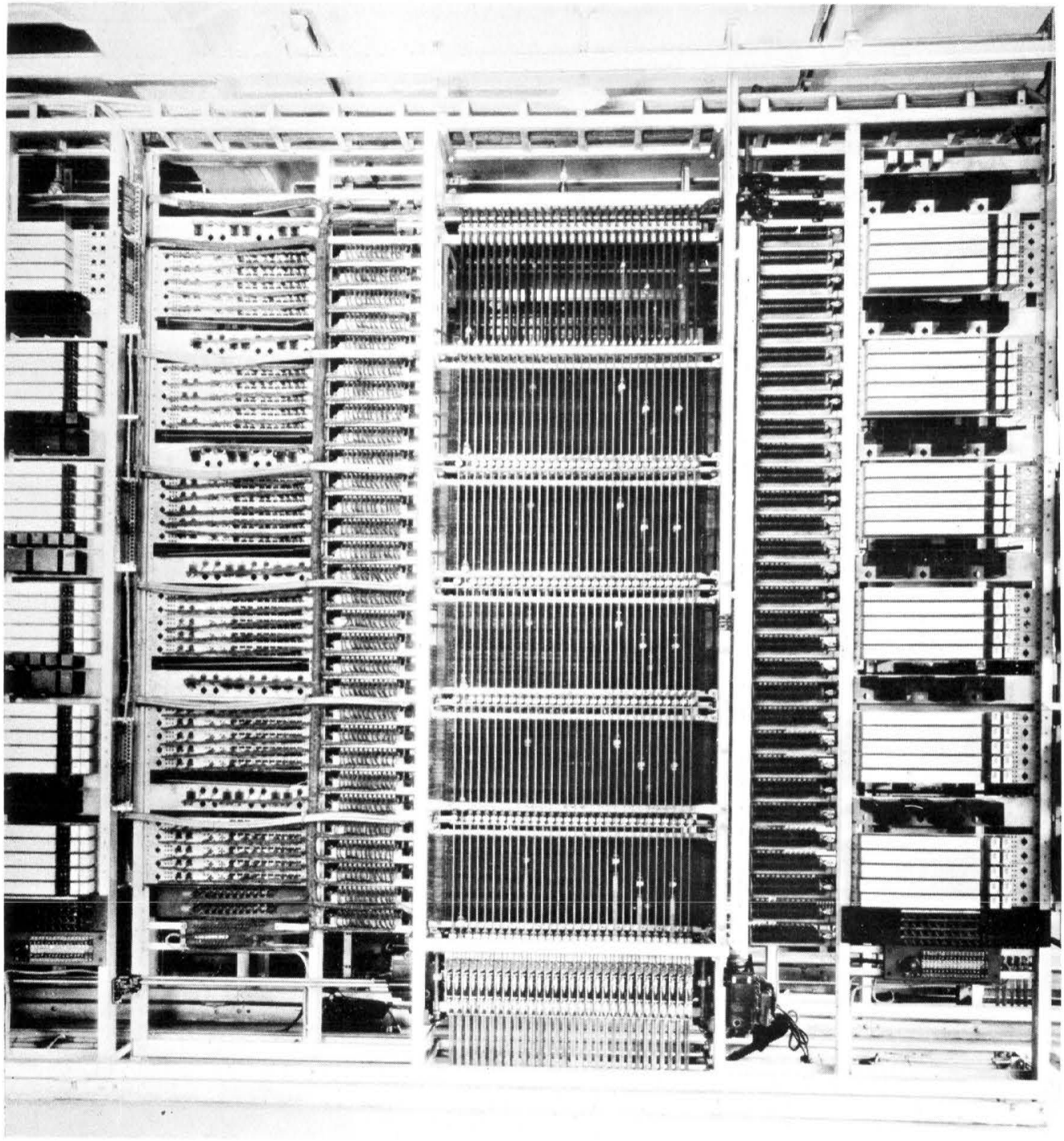

Figure 5-1 Typical Panel Dial Selector Frame

TCI Library: www.telephonecollectors.info

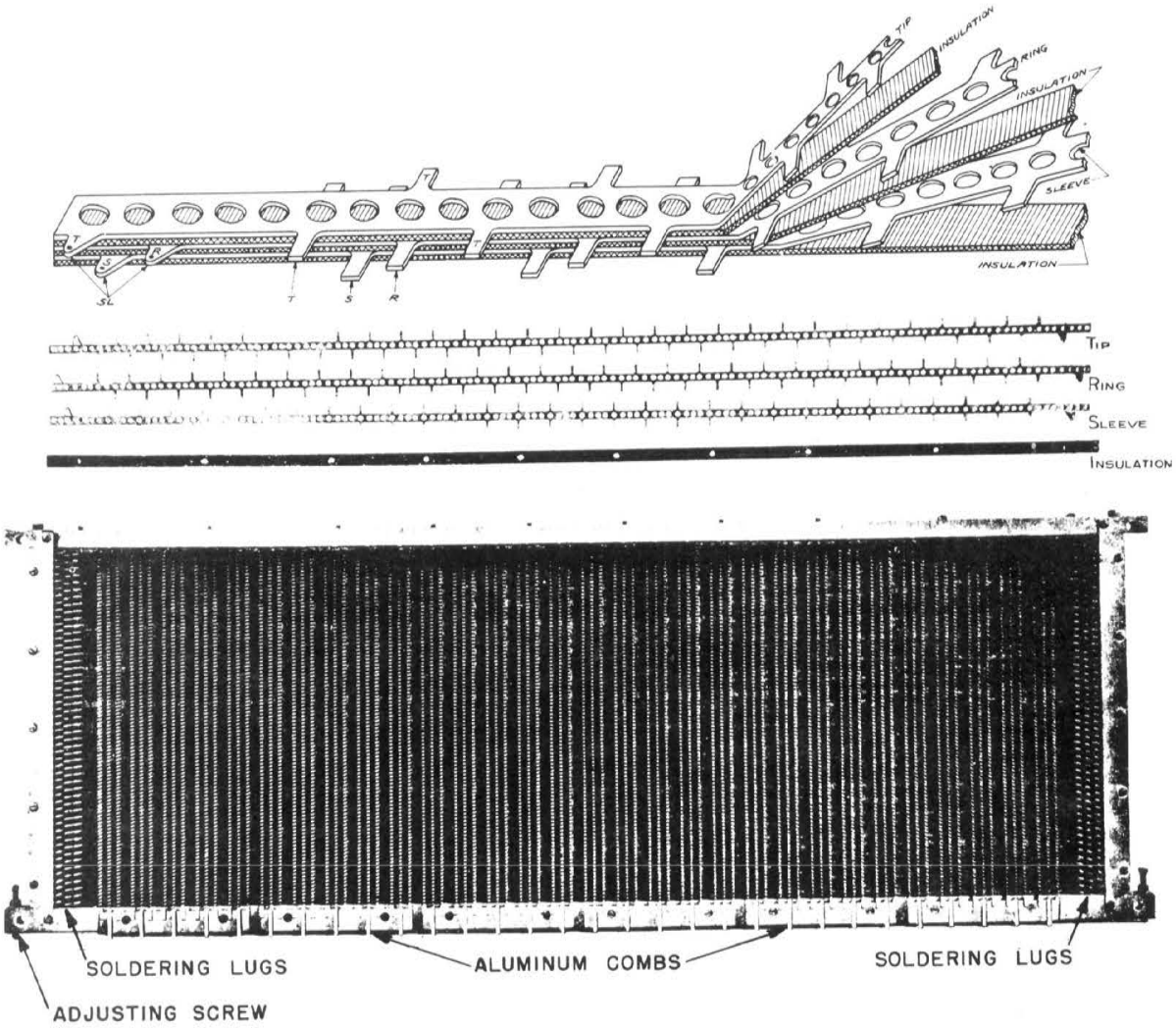

Figure 5-2 Panel Multiple Bank

TCI Library: www.telephonecollectors.info

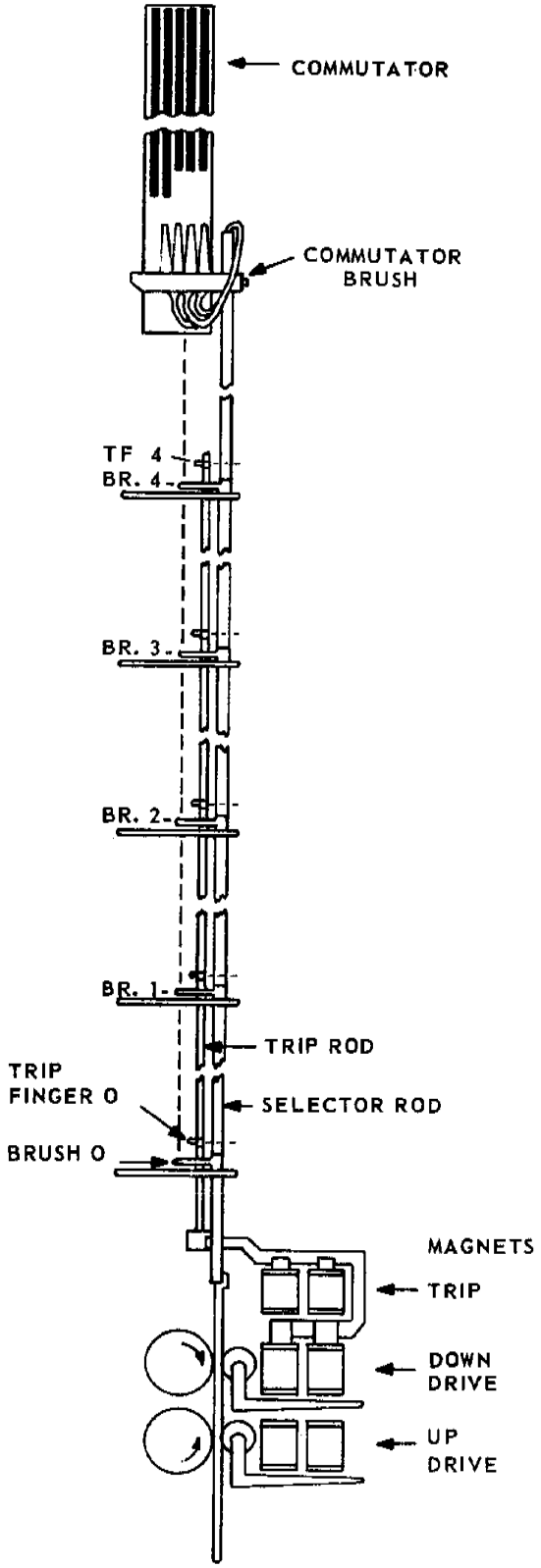

Figure 5-3 Selector Rod, Drive Mechanism, and Clutch Assembly

TCI Library: www.telephonecollectors.info

down. A spring pawl just above the upper roller of the clutch drops into notches punched in the rack, which can be seen in Figure 5-4, and prevents the selector from falling when it has been raised. An arm on the armature of the down drive manget of the clutch withdraws the pawl when the selector is driven downward. The rack, brushes, and upper part of the clutch are clearly shown in Figure 5-4.

Corresponding terminals of the five brushes on each selector tube are connected together by wires which pass inside the tube and come out at the top where they are connected to another brush of different construction mounted at the extreme top of the tube. This brush slides on a "commutator" which consists of brass bars molded in insulating material and serving to conduct current which enters the commutator through the moving selector brushes. The commutator and the commutator brush also control electrically the movement of the selector, as will be described later. The commutator and commutator brush are shown in Figure 5-5.

The selector brushes which are shown in detail in Figure 5-6 do not normally touch the terminals, their fingers being held apart by two little hard rubber rollers which are forced between them. When the selector rises, no contact is made with any of the terminals unless one of the brushes is closed or "tripped" by withdrawing the rubber rollers which hold the brush open. One method of tripping a desired brush is described in the following. Between each selector tube and its terminals and encircled by the fingers of the brushes, is a small vertical brass rod arranged to be partially rotated by a magnet at the top of the clutch (see Figure 5-4). This rod carries five spring-mounted latches and is called the "trip rod." Either in the normal position or when full rotated, the latches of the trip rod do not interfere with the movement of the selector, but if the selector is raised to a certain point and the trip rod then rotated, one of the latches will catch on a projection of the associated brush and be held there while the other latches continue to rotate with the trip rod. This projection is attached to the hard rubber rollers which hold the brush open and any further upward movement of the selector will now cause the hard rubber rollers to be withdrawn and the brush to close and make contact with the terminals of the bank. When the selector descends again, a long trigger

TCI Library: www.telephonecollectors.info

attached to the hard rubber rollers strikes the framework and restores the brush to its normally open position just as it reaches the lowest point of its travel.

The brushes on the selector tube and the latches on the trip rod are placed equal distances apart but the latches are not the same distance apart as the brushes. There is, therefore, a certain position of the selector in which the first latch on the trip rod will, if the rod is turned, catch the projection on the first brush but in this position none of the other latches will catch the projections on the other brushes, being too high. Similarly, there is a certain position in which only the second brush will be caught, the latch for the first brush being too low and the latches for the other brushes being too high. This is shown diagrammatically in Figure 5-7. Thus by moving the selector up to a certain point before turning the trip rod, any one brush on that selector can be tripped at once. By this plan any terminal in any of the five banks can be reached by the selector although the total travel of the selector is only the height of one bank.

On the line finder frame a different method of brush tripping is used. Here any one of the thirty selectors on either side of the frame may rise in response to a start signal from the subscribers line, however, once selection has started, only one elevator can updrive. In this case the trip rods are mounted horizontally at the bottom of each of the 10 banks. The trip fingers are so located that when a trip magnet operates, the fingers swing over the trip levers of all the idle finder brushes in the bank in which the subscribers line appears. Any normal elevator if then made to rise, will have the plunger of that brush pulled out, allowing the brush to make contact with the bank terminals as the line finder rises. The other brushes on the rod, not being tripped, do not touch the bank terminals.

B. SEQUENCE SWITCH

The circuits which control the movements of panel type selectors are necessarily complicated and their operation requires the making and breaking of a large number of connections. Some of these connections are established or broken by means of relays. To reduce the

TCI Library: www.telephonecollectors.info

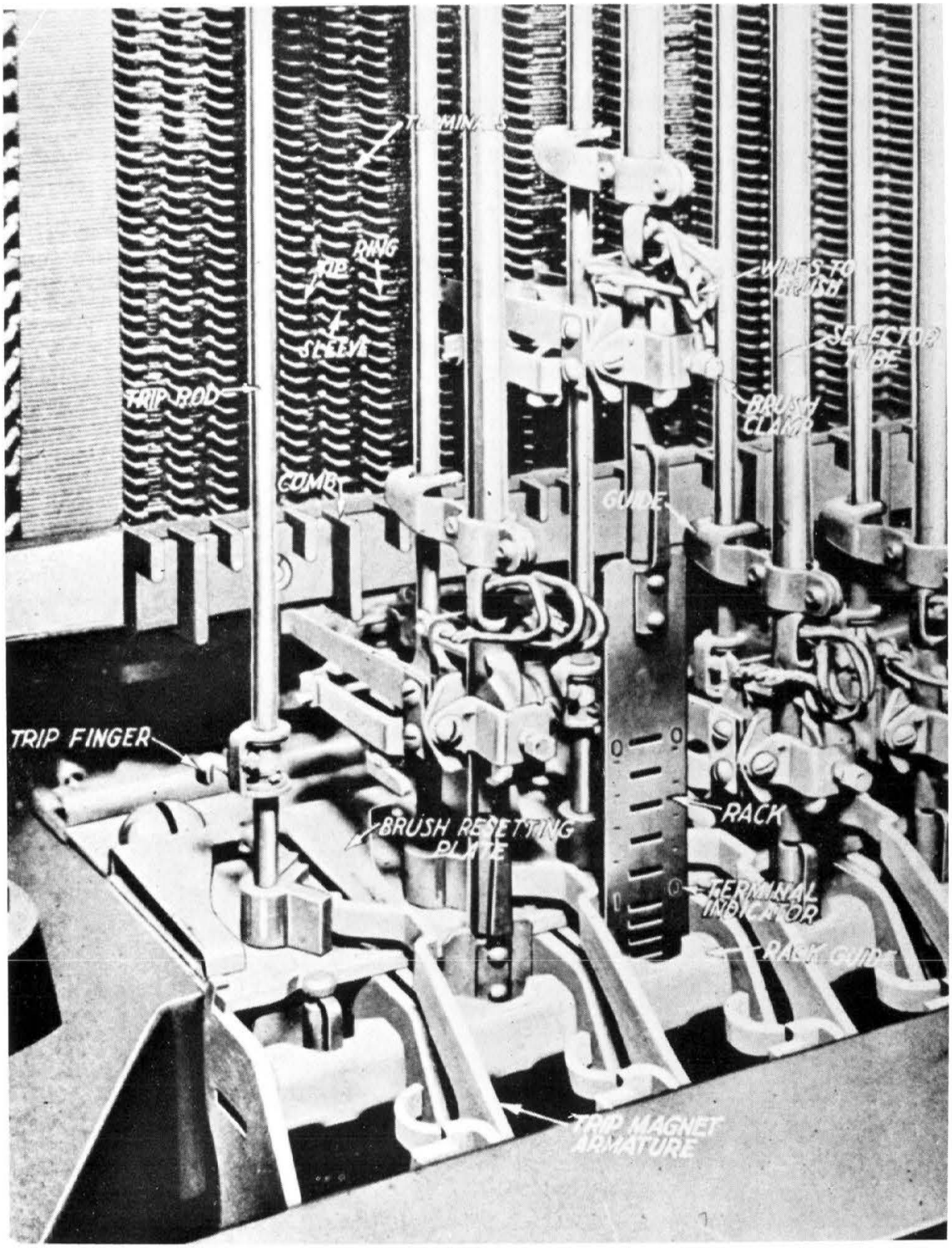

Figure 5-4 Panel Type Selecting Mechanism

TCI Library: www.telephonecollectors.info

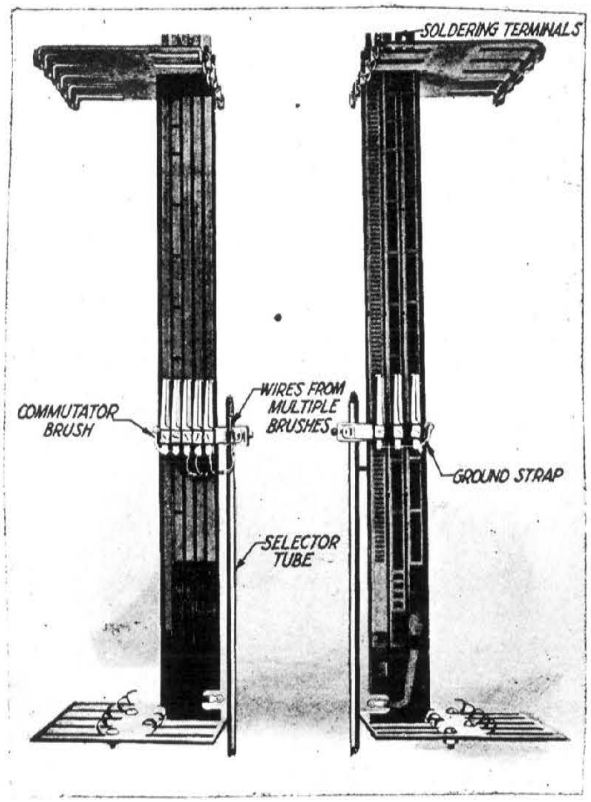

Figure 5-5 Panel Commutator Mechanism

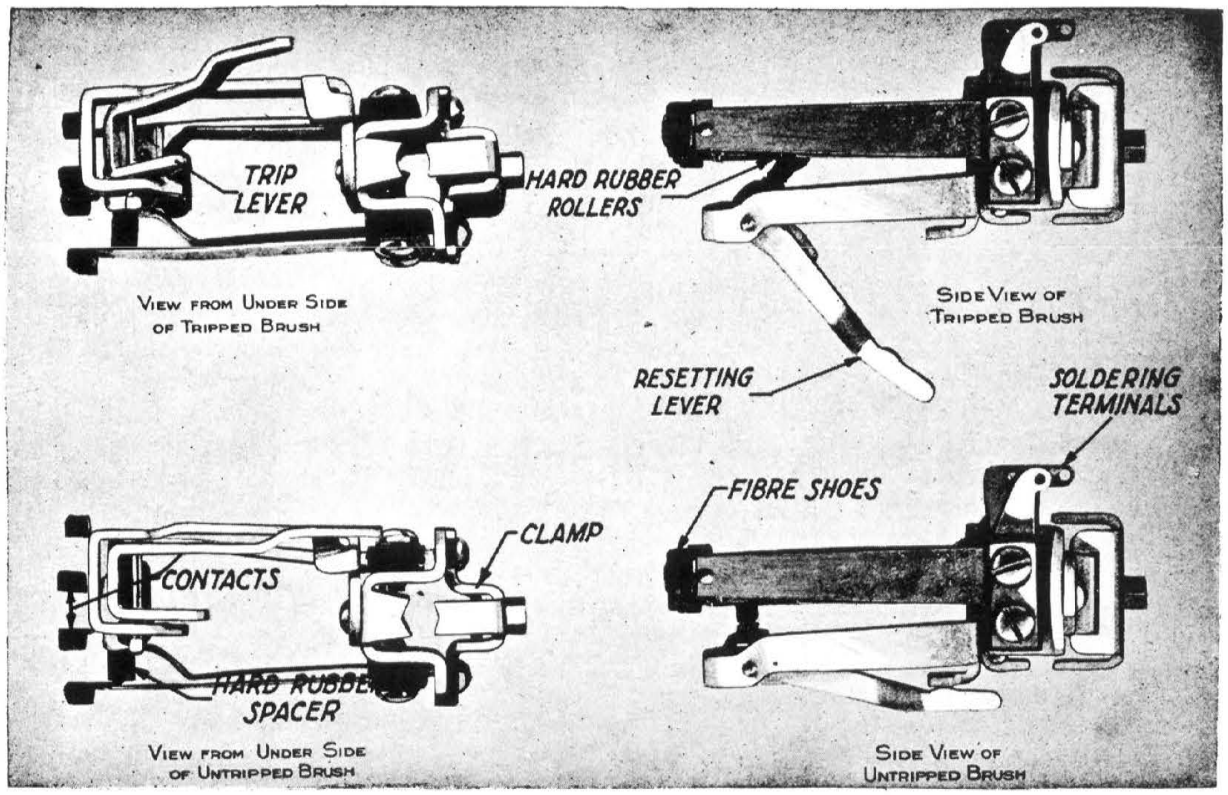

Figure 5-6 Panel Brush Mechanism

TCI Library: www.telephonecollectors.info

number of relays required, a special form of switch called a "sequence switch" has been developed which, in general, performs the functions of a group of relays. Figure 5-8 shows one of these switches, one of which is associated with each selector.

The sequence switch consists of a number of discs or "cams," each composed of two plates of metal riveted one on each side of a disc of insulating material and all mounted on a square shaft which can be revolved. Four contact springs rest on each disc and a fluted cam with a spring roller at the end of the shaft serves to hold the shaft in any one of eighteen positions. These positions are indicated by a numbered wheel at the opposite end of the shaft. The metal plates are cut out with irregular notches so that in certain positions of the shaft certain contact springs rest on the metal of the plates and others on the insulating material; while in other positions, different springs rest on the metal and the insulation, respectively. Turning the shaft therefore, serves to make and break the connections between contact springs in various combinations. As one of these switches will accommodate as many as 24 cams, each of which has four contact springs, there may be 96 separate wires connected to the switch which by turning the shaft can be connected or disconnected in 18 different arrangements. Each arrangement is capable of an almost infinite number of variations by changing the shape and size of the notches in the metal plates. Contacts may be made or broken simultaneously or separated by exact time intervals, which is difficult to do by means of relays.

The functions of a sequence switch in controlling a selector are enumerated in Table 5-1. Position number 1 is the normal position of the switch when the selector is not in use. As soon as the selector has been chosen to be used in making a call, it is necessary to select an idle sender. This is not done by the sequence switch but it serves to make certain electrical connections for this purpose when it is turned to position Number 2. Until the idle sender has been found, nothing more can be done; so the sequence switch is turned to position Number 3, where the connections are arranged to wait for the sender. In the same way, for each new operation to be performed, the sequence switch is turned to a new position and in that position makes the proper electrical connections for that operation.

TCI Library: www.telephonecollectors.info

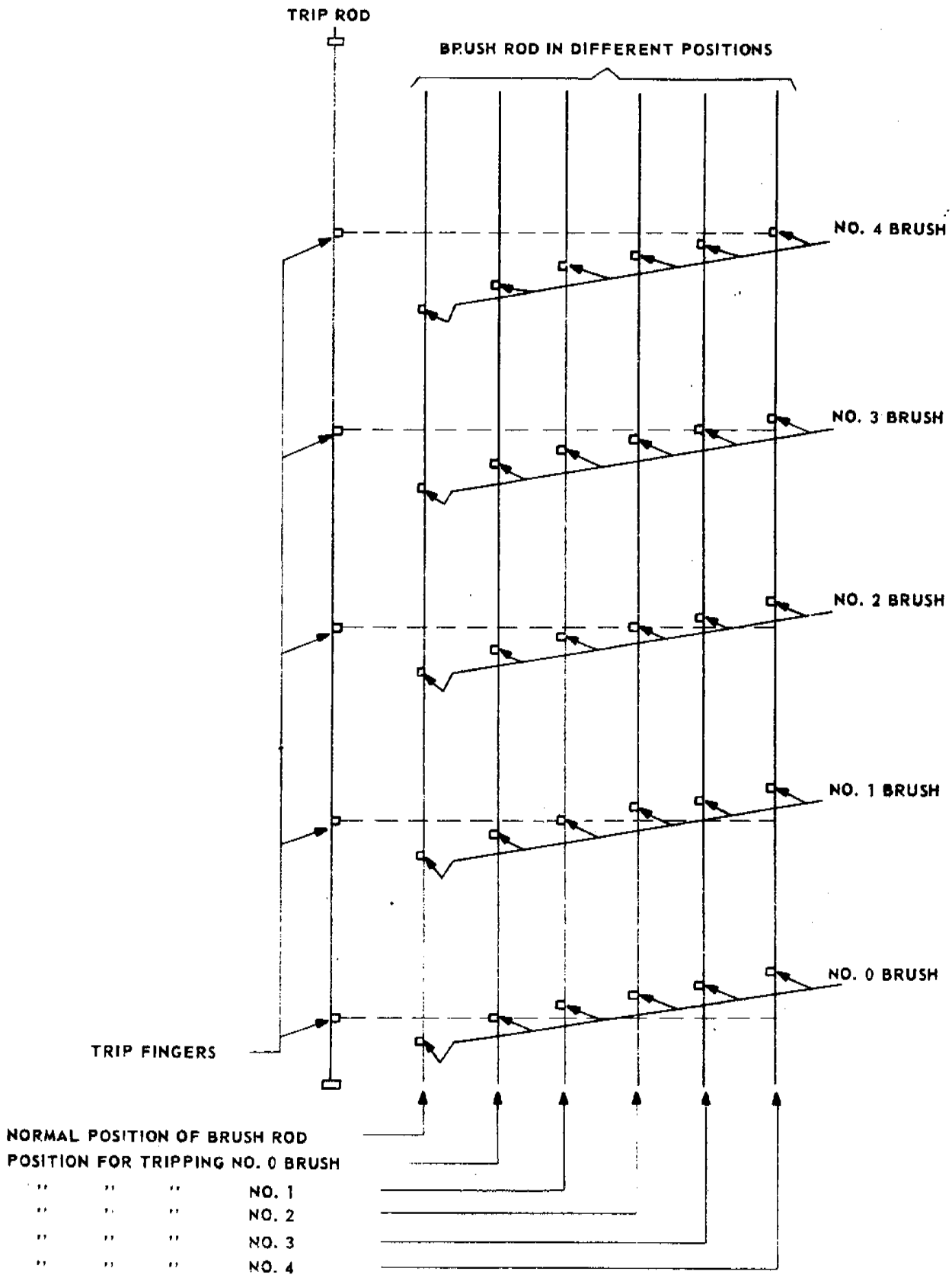

Figure 5-7 Brush Selection

TCI Library: www.telephonecollectors.info

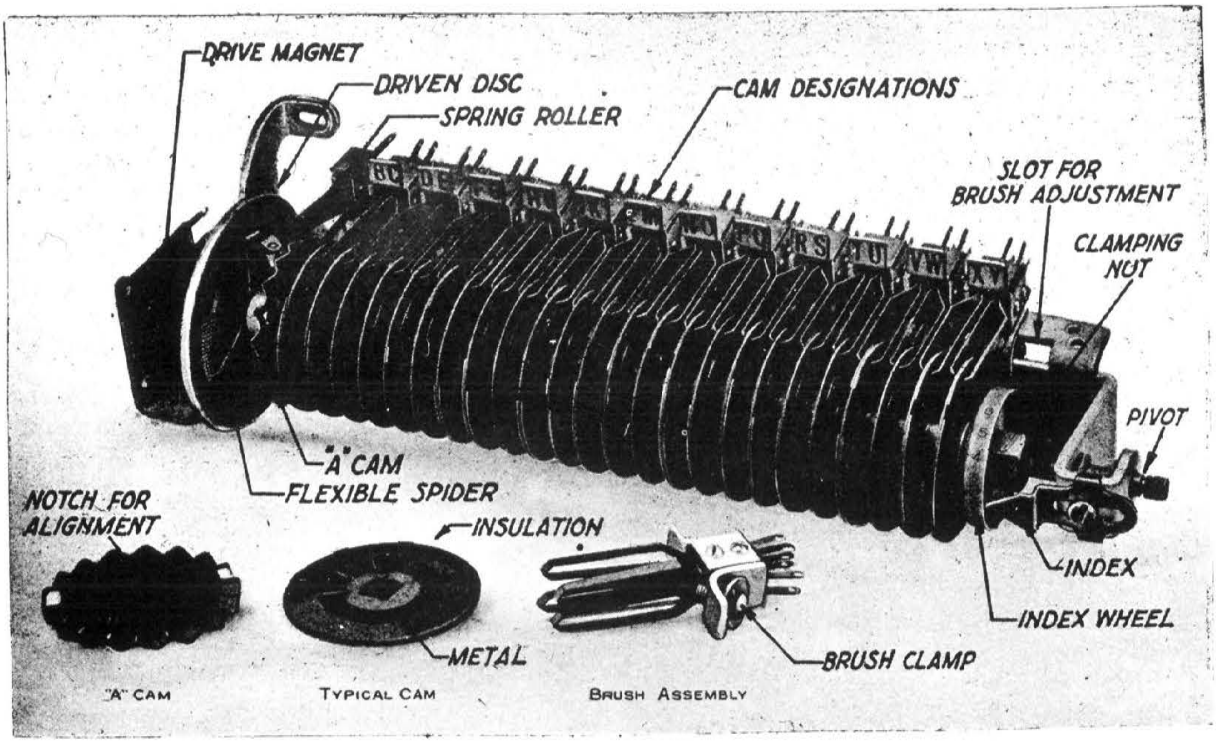

Figure 5-8 Sequence Switch

The sequence switch is turned by a friction drive mechanism at the end of its shaft. Next to the fluted cam is an iron disc mounted on a flexible bronze spider. With the sequence switch mounted on the framework, this disc stands close to but not touching a horizontal iron disc on a vertical brass shaft which is constantly revolved by the same motor which drives the cork covered rollers for the selector drive. Close to the first disc is an electromagnet. When current is applied to this magnet, the flexible mounted disc is drawn against the revolving disc and the sequence switch shaft is driven around by friction. The current on the magnet is maintained by a contact spring on the fluted cam which does not allow the switch to stop until it falls into an insulated notch in the fluted cam. It is only necessary, therefore, to put current on the magnet momentarily and the switch will revolve to the next position at which there is a notch in the fluted cam. If there is no notch in a position, the switch will not stop in that position. Each time the switch stops it is necessary to apply current momentarily to the magnet to make it turn to the next position.

TCI Library: www.telephonecollectors.info

TABLE 5-1

DISTRICT SEQUENCE SWITCH

Position	Corresponding Circuit Condition
1	Normal.
2	Selecting an idle sender.
3	Waiting for sender.
4	Selecting brush.
5	Waiting for sender.
6	Selecting group.
7	Waiting for relays.
8	Hunting idle trunk.
9	Waiting for sender.
10	Selection of brushes, groups, etc. beyond the district selector.
11	Waiting for sender.
12	Talking (nonloaded trunk).
13	Talking (medium-loaded trunk).
14	Waiting for operator to answer.
15	Talking to operator.
16	All trunks busy.
17	Operating message register.
18	Returning apparatus to normal.

5.3 EQUIPMENT ELEMENTS

The switching network, of the Panel System, consists of line finders, district and office frames, and incoming and final multiple banks.

A. LINE FINDER FRAME

The line finder frame provides a means of associating subscribers' lines with central office equipment used in establishing connections. The frame consists of ten multiple banks each of which has a capacity of forty lines. This is known as a 400-point frame. An earlier frame made provision for 300 points but is no longer used. Subscribers' lines are terminated on the multiple banks and have access to selectors. Traffic density through the frame is determined by the calling pattern of the subscribers on the frame. It is desirable, then, to provide a flexible pattern of selectors to the

TCI Library: www.telephonecollectors.info

400 lines. This is accomplished by providing an arrangement of splitting the banks and allowing the 400 lines to have access to twenty, twenty-eight, forty, or sixty selectors.

With many lines being served by few selectors there is a need for some preference arrangement on the line finder frame. To accomplish this, the multiple bank is split in the center and a reversal is inserted between the two halves of the bank. The split forms two subgroups, A and B, and half of the selectors serve each subgroup. The reversal in the bank changes the preference of the subscribers' line in each subgroup. He may be last preference in subgroup A, but he would have first preference in subgroup B. Figure 5-9 shows a line finder bank split into subgroups A and B served by sixty selectors. Figure 5-10 shows other possible arrangements of the line finder group.

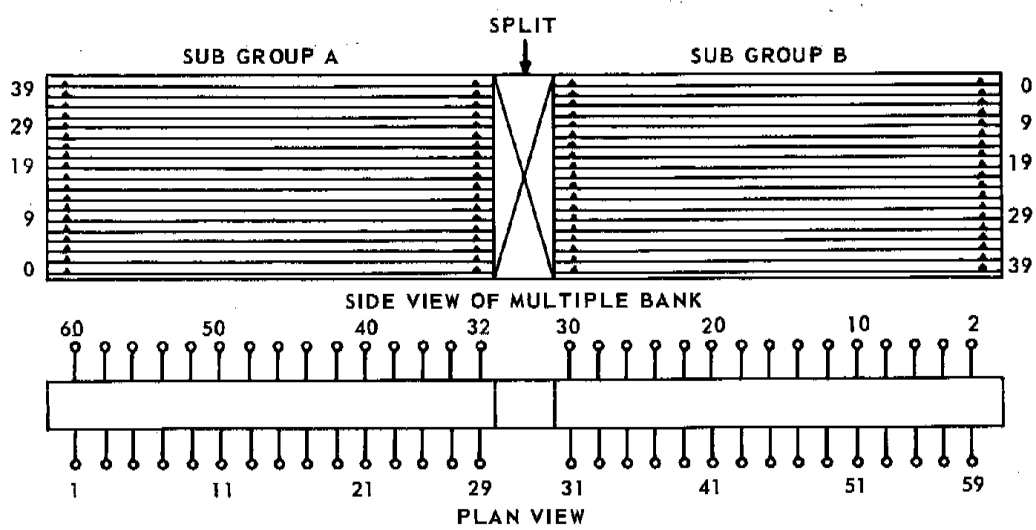

ARRANGEMENT OF MULTIPLE BANK USED FOR TERMINATING 400 LINES PER FRAME
400 LINES MULTIPLED BEFORE A MAXIMUM OF 60 LINE FINDERS

Figure 5-9 Line Finder Group

TCI Library: www.telephonecollectors.info

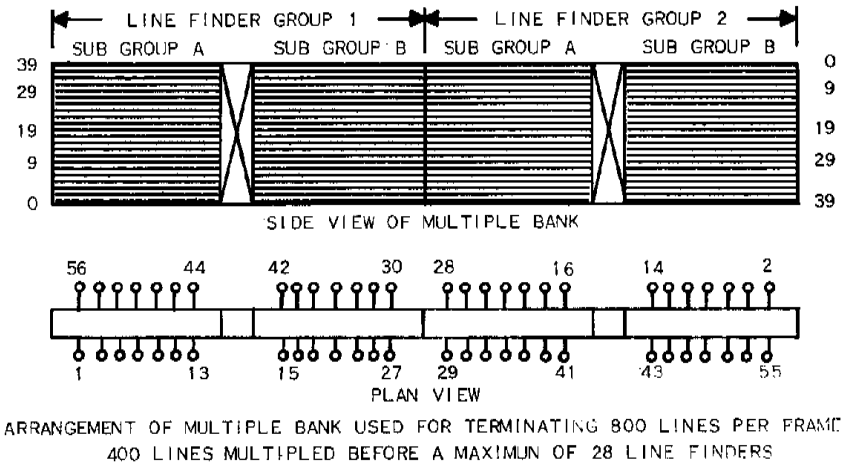

ARRANGEMENT OF MULTIPLE BANK USED FOR TERMINATING 800 LINES PER FRAME
400 LINES MULTIPLED BEFORE A MAXIMUN OF 28 LINE FINDERS

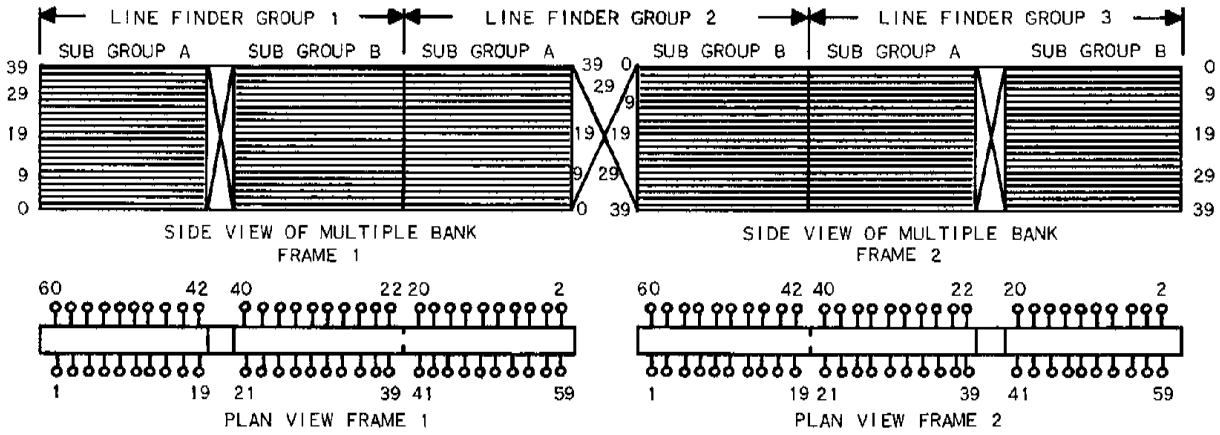

ARRANGEMENT OF MULTIPLE BANK USED FOR TERMINATING 1200 LINES ON TWO FRAMES
400 LINES MULTIPLED BEFORE A MAXIMUM OF 40 LINE FINDERS

Figure 5-10 Arrangements of Line Finder Multiple Banks

B. DISTRICT FRAME

The district frame provides the proper routing for the originating call. At this frame appear trunks to other offices, to operator or desk positions, or to office frames containing trunks to other offices.

TCI Library: www.telephonecollectors.info

The district frame consists of five multiple banks of 100 terminals per bank and has a capacity for 60 selectors together with the associated mechanism. Each bank is made up of ten sets of terminals consisting of eight sets of 11 terminals each and two sets of six terminals each. The last terminal in each set is wired as an overflow terminal, leaving 90 terminals in each bank available for assignment as trunks or paths. In case more than ten trunks are required for a trunk group the overflow terminal is so wired that it will test busy instead of giving an overflow. In this way, it is possible to establish trunk groups of more than 10 trunks and to arrange for a selector to hunt over the entire group for an idle trunk. Figure 5-11 illustrates a district frame trunk assignment in an office without office frames.

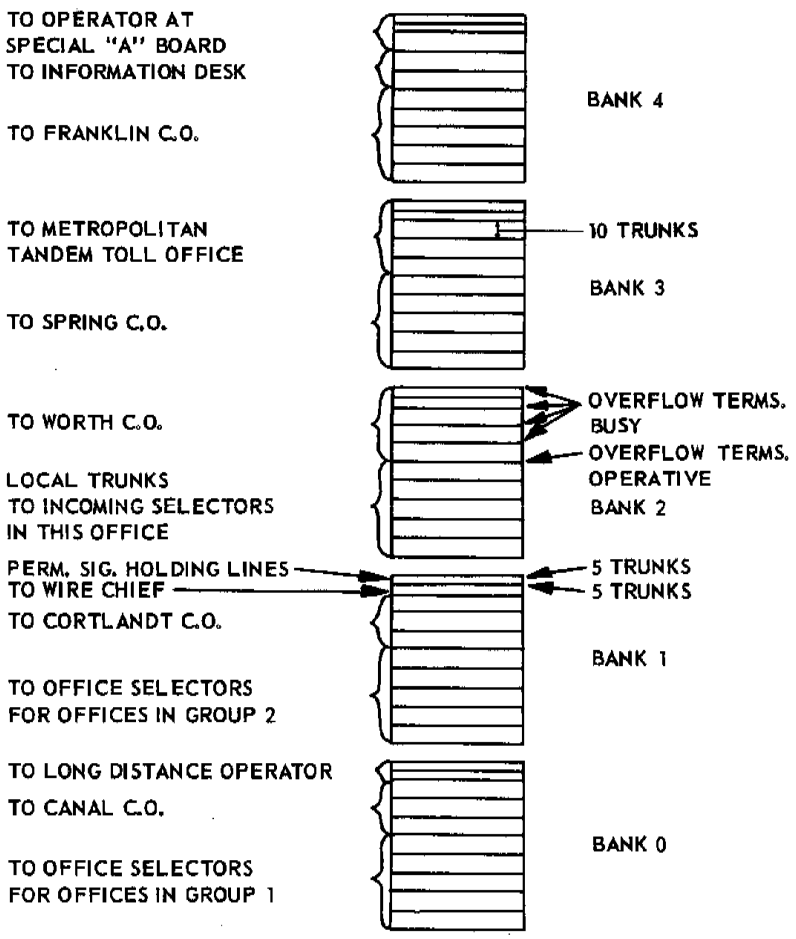

Figure 5-11 Terminal Banks of District Frame

TCI Library: www.telephonecollectors.info

C. OFFICE FRAME

Office frames are installed to provide additional outgoing trunk capacity when the requirements exceed the capacity of the district frame. The capacity of the district and office frames as well as the provision of trunk and overflow terminals within the banks, is similar. Office frames are separated into a number of groups known as office multiples. Each office multiple contains outgoing trunk capacity to a particular group of offices and consists of one or more office frames. The number of office multiples provided is dependent on the number of offices to be served and the number of trunks required to those offices. In large exchanges it may be necessary to provide several office multiples with a number of office frames in each multiples. Figure 5-12 shows the trunking between district and office frames.

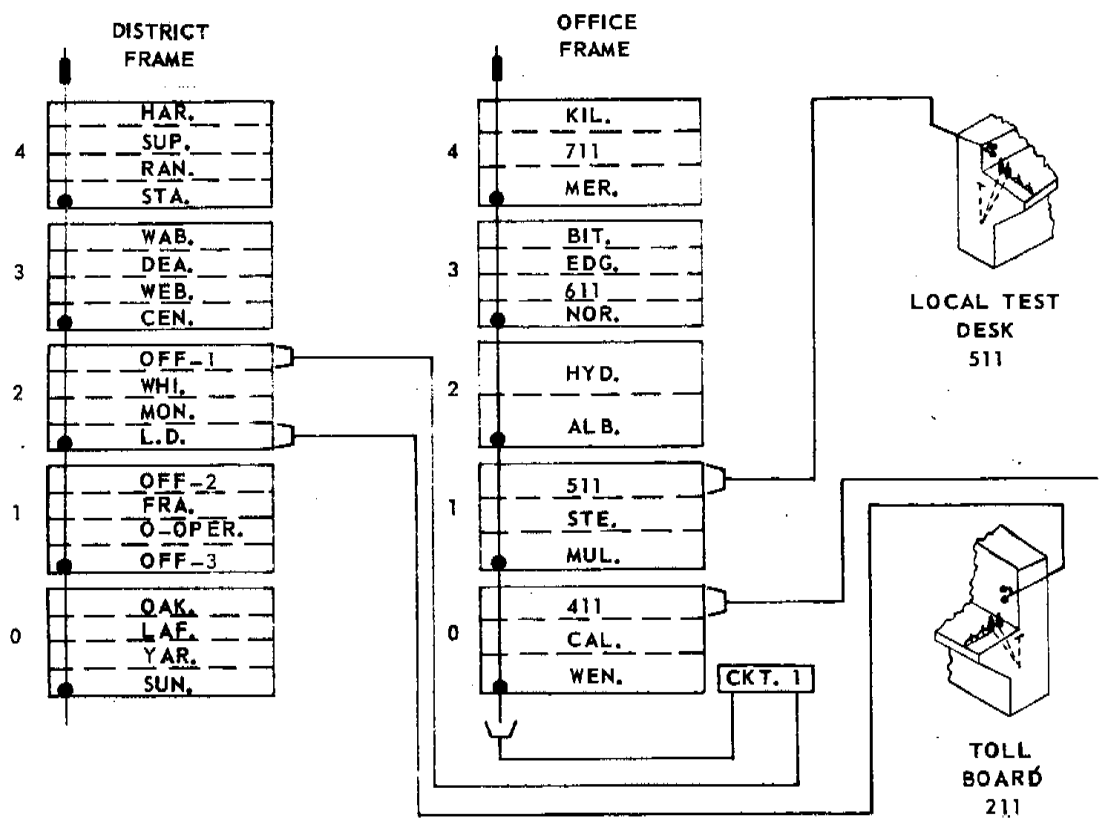

Figure 5-12 Trunking Between District and Office Frames

TCI Library: www.telephonecollectors.info

D. INCOMING FRAME

The purpose of the incoming frame is to make connection between a path or trunk incoming from a dial or manual office to equipment serving a particular 500 numbers. It also supplies the proper ringing current to ring the called station when the line has been selected on the final frame. This frame is similar to the district frame in that it contains five banks of 100 terminals per bank and capacity for 60 selectors. It differs, however, in that each bank is made up of four groups of terminals consisting of 24 trunk terminals and one overflow terminal. Thus, 500 terminals are arranged to provide 20 groups or choices, each of which has access to equipment serving 500 numbers, or a maximum capacity of 10,000 numbers or terminals for a full sized unit. Figure 5-13 shows the trunking between incoming and final frames. Due to circuit requirements, separate groups of incoming selectors are provided for handling calls from dial, manual and toll offices.

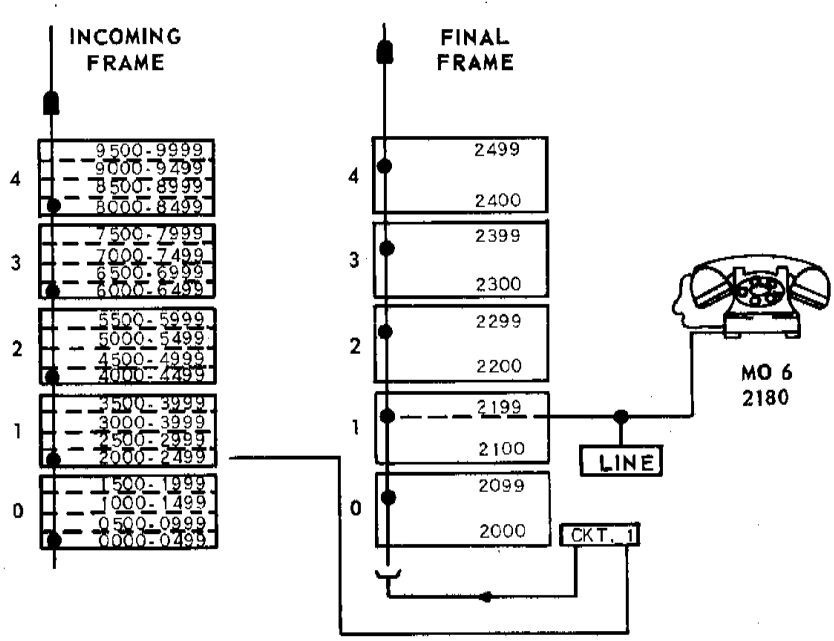

Figure 5-13 Trunking Between Incoming and Final Frames

TCI Library: www.telephonecollectors.info

E. FINAL FRAME

The final frame is the last step in the connection of a call to a dial telephone. Its function is to make a connection between the path from the incoming frame and the terminal of the called station. This frame is similar to the district and incoming frames in that it contains five banks of 100 terminals per bank and capacity for 60 selectors. However, instead of the multiple banks of trunk terminals, this frame has multiple banks of subscribers' terminals. On district, office and incoming frames the selector picks an idle terminal in a particular group while on the final frame, the selector picks a particular terminal corresponding to a subscriber's number; that is, it is of the particular-terminal selecting type rather than of the hunting type. In the case of a P.B.X. or multi-line group the wiring is so arranged that the final selector selects the first idle trunk in the P.B.X. group.

Normally, one final frame with capacity for 60 final selectors is sufficient to handle calls for a particular group of 500 numbers. However, more than one frame can be provided if conditions require more than 60 selectors. For example, if more than 60 and less than 90 final selectors are required, one final frame bridged with one-half of another constitutes a final choice. Similarly, two final frames can be bridged together, giving a maximum of 120 final selectors for a choice. Also, if less than 60 selectors are required, two-thirds or one-half of a frame can be utilized to make up a final choice.

F. SENDER CONNECTORS

(a) Sender Selector

In older offices, a branch of the line finder-district selector circuit terminates on the brushes of a rotary type switch known as a "sender selector." This switch is provided with a semi-circular multiple bank, upon the multiple contacts of which terminate trunks leading to a maximum group of 22 senders. The purpose of this switch is to select an idle sender and associate it with a line finder-district selector unit (that is, with the

TCI Library: www.telephonecollectors.info

calling line) when a call is initiated. The group of senders is multipled through the banks of as many sender selectors as will constitute a load for the sender group. The sender selector is of the "stay-put" type, that is, it does not return to normal after it has completed its functions. When it is used on a second call it starts to test for an idle sender at the point where a sender was connected on the previous call. Figure 5-12 shows the relative position of the sender selector in the train of selection.

(b) Panel Link Frame

A later development in the panel system utilizes a link in place of a sender selector as a means for associating a sender with a line finder-district selector unit. The link permits the use of larger groups of senders with consequent reduction in the total number of senders required. The earlier type or rotary link gives access to a group of 44 senders while the latest type of panel link gives access to a group of 100 senders. The general operation of both types is similar, the rotary type utilizing rotary switches and the panel type utilizing selectors and multiple banks.

The link is a double-ended type of selector and is mounted on a link frame which has capacity for 30 links. One end of the link has access to a sender selector bank with capacity for 100 sets of terminals and the other end has access to a district finder bank with capacity for 20 or 40 sets of line finder-district selector circuits. Both of these banks are mounted on the link frame. The smaller size district finder bank is used for line finder groups of 28 or 40 units while the larger bank is used for groups of 60 or 80 line finders.

TCI Library: www.telephonecollectors.info

G. SENDER

The sender is the unit of equipment which controls the establishment of a connection through the required selectors and trunks. Each sender comprises relays and other apparatus mounted in metal cabinets and 11 rotary switches and 6 sequence switches mounted outside the cabinet. Sender operation is electro-mechanical.

As previously mentioned, in the panel system, direct control of the switches by the subscriber's dial is abandoned. It is the function of the sender - 1) to record and hold the number dialed, 2) convert it into terms of selector, brush and group selections and 3) control the selectors in accordance with them. The sender, therefore, is the major control element of the panel system.

When a sender has been connected to a subscriber's line through the link frame, dial tone is returned to the subscriber which signals him to start circuit impulses which operate the line relay and, through its contacts, a chain of sensitive relays. While these relays are able to follow the rapid pulses, they do not have enough contacts to store them. At the end of each train of pulses which comprise a digit, the information dialed is transferred to a train of register relays and the counting relays return to normal to follow the next train of pulses. As many as eight trains of register relays are provided to accommodate a 3-digit office code, a 4-digit number and a party letter, and each train is called in successively to record and store the successive digits.

When the first three digits representing the office code have been dialed, recorded and stored, the sender calls in a decoder. The decoder looks at the first three digits and determines the location of the called office trunks on the district frame. This information is passed back to the sender over six relay control leads. While this operation was in process, the sender was accepting the remaining digits from the dialing station.

H. DECODER CONNECTOR FRAME

The decoder completes its operations in about 0.3 seconds so that one decoder may serve many calls if it is connected into a circuit only during the time it is

TCI Library: www.telephonecollectors.info

required. This is accomplished by the decoder connector. Dependent upon the number of senders and decoders, arrangements are provided so that all senders have access to all decoders on a preference basis. This prevents loading up one decoder. The connections are completed through relay chains and are released upon completion of the decoder function.

I. DECODER

As previously discussed, the sender is connected to the decoder and submits to it the three-digit office code. The office code is registered and checked in the decoder and then, through a translating relay chain, a particular route relay is operated, one of 800 possible choices. The route relay in operating, grounds six leads which terminate on the cross-connecting frame and which are designated by the letters "CL," "DB," "DG," "OB," "OG," and "CR." These indications are transferred back to the sender where they are locked into the sender register. The sender then sends a disconnect signal which results in restoring the decoder and disconnecting it.

J. EQUIPMENT FOR DIRECT DISTANCE DIALING

(a) The Auxiliary Sender

The auxiliary sender is a wire-spring relay equipment unit, four of which mount in a single frame. It is used in a decoder panel office to provide the Direct Distance Dialing feature for the subscribers. The auxiliary sender registers the last two digits on a 10-digit DDD call, thus supplementing the eight-digit capacity of the subscriber sender in the Panel office. When the outgoing trunk is selected, the auxiliary sender tests to make sure a remote incoming sender is attached. It then signals the subscriber sender to pass the eight digits stored in it on a PCI basis to the auxiliary sender. The auxiliary sender outpulses to the distant office on a multifrequency basis. With the completion of outpulsing, it notifies the subscriber sender so that both senders may release. Figure 5-14 shows a block diagram of auxiliary senders applied to a Panel Office.

TCI Library: www.telephonecollectors.info

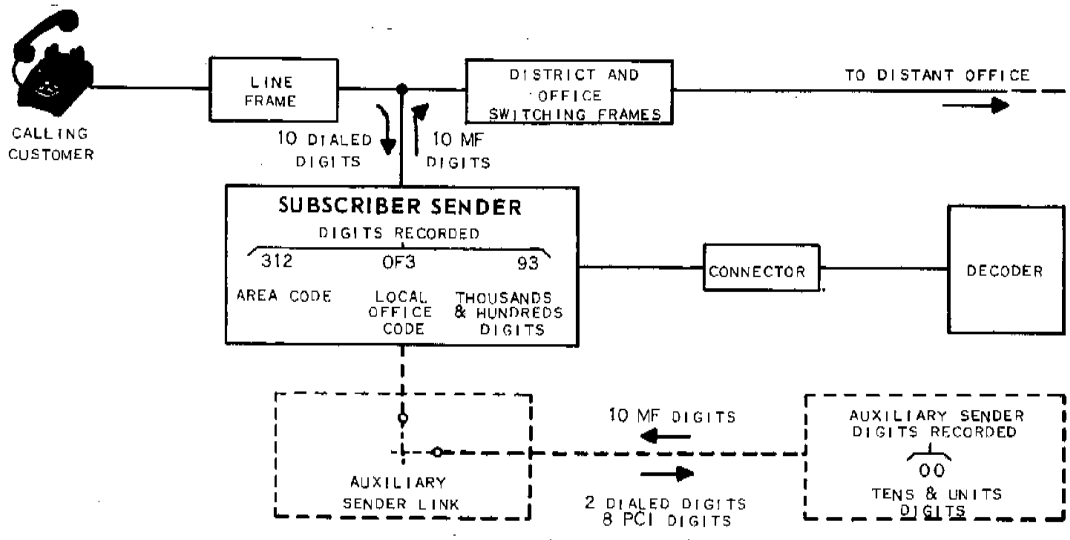

Figure 5-14 Block diagram of auxiliary sender applied to a panel central office.

(b) <u>The Auxiliary Sender Link</u>

The <u>auxiliary sender link</u> provides the connecting path between any one of a maximum of 100 subscriber senders and their associated auxiliary senders. This frame may be partially equipped in individual units, each with capacity for ten subscriber senders and, when fully equipped, consists of ten auxiliary sender link units. An auxiliary sender link unit consists of a 200-point, 6-wire crossbar switch with associated relays. The senders appear on the verticals of the unit, two verticals per sender. The auxiliary senders appear on the horizontals and may be multipled over as many link units on as many link frames, as the auxiliary sender traffic will permit.

To provide a certain degree of service protection, the senders in the same sender group should be spread over two or more

TCI Library: www.telephonecollectors.info

auxiliary sender link frames. Duplicate control equipment is normally provided so that trouble in one frame will not affect service to senders appearing on the other link frame(s). It is also possible to split the senders on a particular auxiliary sender link frame between two groups of auxiliary senders by providing control circuits for each group.

5.4 COMPLETION OF A FULL MECHANICAL CALL

Figure 5-15 is a block schematic diagram of all the elements of the panel system required to complete a call on a full mechanical basis.

The removal of the receiver from the hook operates the line circuit which in turn operates the line finder trip circuit, causing a horizontal trip rod on each side of the frame, opposite the bank in which this line appears, to operate. Two trip rods are required because the line finders available to any subscriber are on both sides of the frame and the trip rod must engage with the proper brush of any line finder that the link circuit may have previously selected to handle the call.

As soon as the trip rod has operated, the trip circuit operates the start circuit, which operated the up-drive of the line finder clutch through the wiring of the links associated with this group of 400 subscribers' lines and the line finder-district wiring. The selector rod rises, tripping the brush opposite the bank in which the subscriber's line appears.

As soon as the selector rod brush has been tripped, the start circuit is released for other serice. In any particular group of line finders only one finder can start up-drive at a time.

After the line finder has been started it continues upward until the tripped brush makes contact with the terminals of the calling line which causes its upward travel to stop. When the line finder started upward, a sender selector on the link frame also started upward to hunt for an idle sender, if not already resting on one.

TCI Library: www.telephonecollectors.info

The sender immediately sends dial tone through the sender selector and district finder of the link circuit, through the line finder-district wiring and line finder to the calling subscriber. The subscriber on hearing dial tone proceeds to dial the office code and number which is registered in the sender.

As the subscriber dials, the pulses are received by pulse control relays and as soon as each train or series is completed, the pulses control relays which cause the register relays to register the number of pulses counted by the pulse control relays. As each set of relays make their registration, they close a path to make the next registration take place in succeeding register relays.

As soon as the office code letters have been registered and the decoder connector which serves this sender is idle, the decoder connector is caused to select an idle decoder. After the connector has found an idle decoder, it connects the code letters relays through to the decoder for the purpose of informing it of which office is being called.

When the decoder has been notified which office has been called, it registers in the sender a record of the position of the terminals of trunks to that office. This record appears on the district brush, district group, office brush, and office group (marked DB, DG, OB, and OG), groups of relays via the decoder connector. As soon as the decoder outpulses DB to OG it causes itself to be released.

During the time the decoder is used and the time taken for the selections described later to be made, the subscriber continues to operate his dial until the desired number has been completely dialed. As each code letter or digit is dialed the pulses are counted and locked into the next and proper register relays. After the decoder has been disconnected from the sender enough information has been received to start selecting a trunk to the desired office, so the selection control causes the district to start brush selection, governed by the sender's selection circuit through the setting of the DB relays.

There are three steps taken by the district selector in selecting an idle trunk; i.e., first, the selection of the brush on whose bank the trunks to the called office

TCI Library: www.telephonecollectors.info

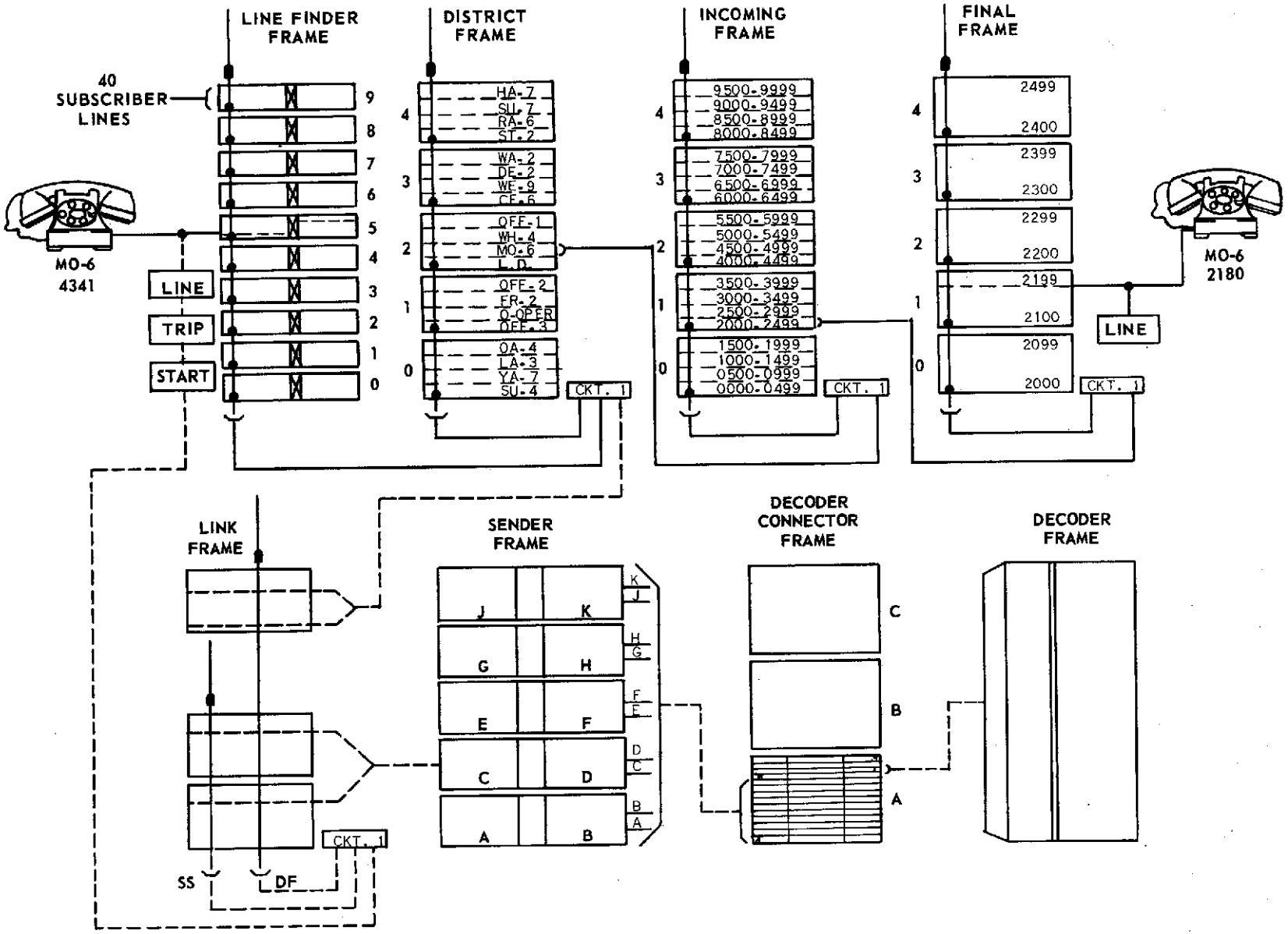

Figure 5-15 Plan of Direct Mechanical Selection

TCI Library: www.telephonecollectors.info

appear (called district brush selection); second, the passing over all trunks to other offices that may appear lower on the bank (called group selection); and third, the picking of the first idle trunk (called trunk hunting).

The sender having found from the decoder which brush to trip causes the district elevator to up-drive to a position where a trip finger on the trip rod will engage with the trip lever of the brush to be tripped when the trip rod operates. In order that the sender can exactly control the height of rise by the elevator, the progress for brush selection is indicated to the sender by means of "A" commutator segments at the top of the selector. Figure 5-16 shows the "A" segments of the commutator used on the district selector.

As the elevator is moved up under control of the sender, the "A" commutator spring, moving with it, passes over "A" commutator segments. The "A" spring when sliding over each segment causes a pulse to be sent to the sender, whose selection control circuit counts or registers the pulses. As soon as the sender receives as many pulses as are recorded to be needed for the DB selection (DB relay group set by decoder) it stops the up-drive of the district elevator. The clutch pawl engages with the rack and upon operation of the trip magnet the proper trip finger engages with a brush trip lever. At this time the brushes have not yet come opposite any bank terminals but have risen only far enough for brush selection. After brush selection the elevator continues for other selections.

Group selection is also governed by the registration in the sender from the decoder through the use of commutator segments and the selection control circuit. The metal commutator strip "B" (Figure 5-17) is used for group selection and is mounted with commuator "A" and other commutator strips in the surface of the insulating base of the commutator. It has a number of segments 0, 1, 2, etc., corresponding to the group or layer division of each multiple bank. The length of the commutator strip "B" corresponds to the height of the 100 terminals in a multiple bank, and the distance between the first sets of terminals of adjacent multiple layers or groups. This is illustrated in Figure 5-17, where the commutator is placed opposite a bank of multiple terminals so as to show the relation between the first terminal of

TCI Library: www.telephonecollectors.info

each layer or group and their respective commutator segments. Commutator brush "B" is arranged to make contact with these segments as the elevator moves upward for group selection. Each time the spring makes contact with a segment it sends a pulse to the selection control circuit of the sender, where it is counted or registered, and when the number of pulses equal the number recorded as necessary for district group selection in the sender by the decoder, the up-drive is stopped. This leaves the tripped brush in contact with the first trunk in the group to the desired office. As soon as the brush reaches the level of the first trunk in the desired group it comes under the control of the trunk hunting circuit and continues to rise until it reaches the first idle trunk in the group.

Some offices have their trunks appear in the groups on the banks of an office frame, in which case a trunk to an office circuit is selected by the district office. After the office selector circuit has been picked, the sender directs the office selector into contact with a trunk to the desired office in exactly the same manner as a district selector is directed into contact with a trunk. The sender for office selections uses the registration received from the decoder by the OB and OG groups of relays.

The incoming selector circuit which the district (or office) selector has chosen may be on a frame at the same office in which the call originated or any other dial system office.

For terminating connections, the subscriber's lines are multipled on the banks of final frames in groups of five hundred. This makes it necessary that a final selector be used that has access to the group of 500 lines where the called line appears. The incoming selector chooses the selector on the proper final frame.

As there are twenty final choices of usually one frame each in a complete central office unit of 10,000 lines, the terminals on the incoming banks are divided into twenty layers or groups, four groups to each bank. There are 100 terminals in each bank; therefore, in each group on an incoming bank there are twenty-five terminals, twenty-four of which are terminals of trunks to final selectors, the other being an overflow set of terminals. In order that connection can be made to terminals in any one of the five banks, brush selection must be made.

TCI Library: www.telephonecollectors.info

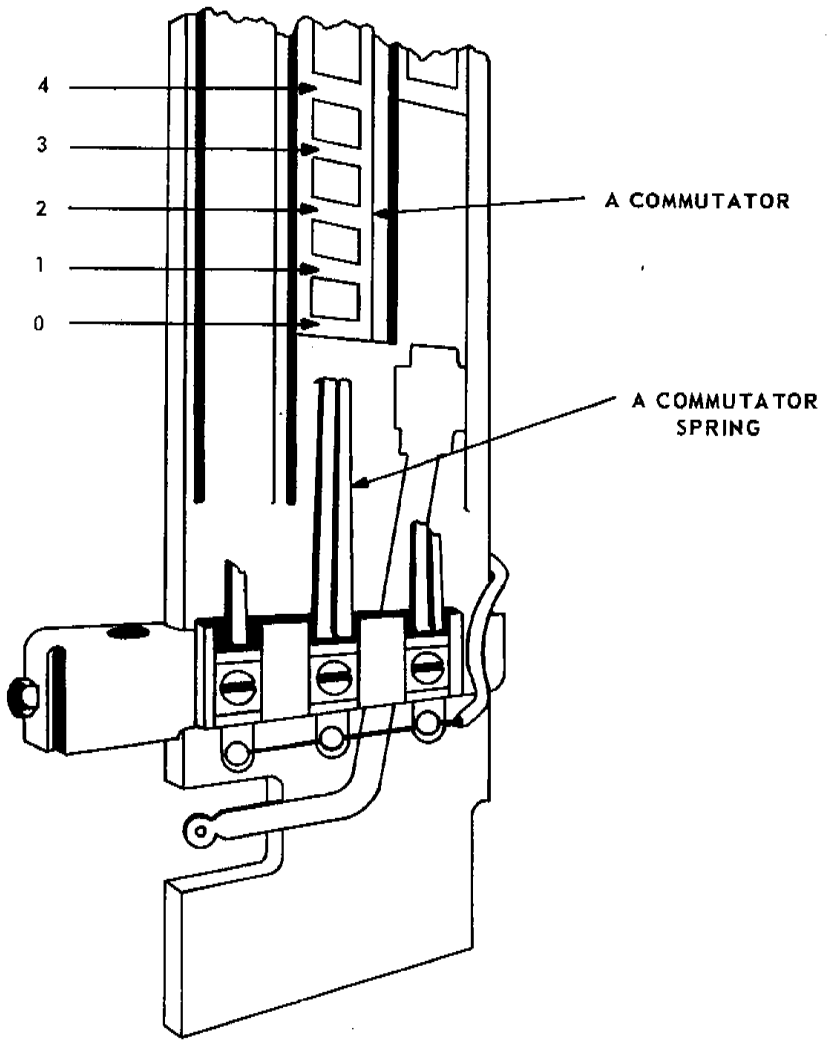

Figure 5-16 "A" Commutator Segments

TCI Library: www.telephonecollectors.info

The sender, as soon as an idle trunk to an incoming frame is found, registers the number of the brush and group to be used on the incoming frame on its IB and IG groups of relays as determined by the setting of the TH and H pulse registering relays. The selection control circuit can then direct the incoming elevator up for brush selection, counting pulses from the "A" segments just as it did for district brush selection and office brush selection.

After the incoming elevator has risen far enough and stopped in position for the proper trip finger to engage with the brush trip lever, it must rise again for group selection to trip the brush and connect to the first set of terminals in the group to which the trunks to the proper final frame are connected. The selection control circuit starts the elevator upward and counts pulses, until the number received from the "B" commutator segments agrees with the registration on the IG group of relays. The method of group selection, as well as brush selection, is identical with brush and group selections of the district and office selectors, only the number and spacing of "B" commutator segments being different.

When the incoming elevator stops on the first terminals of a group, it immediately starts up again if the trunk sleeve terminal is connected to ground; which indicates that the trunk is busy. When an open condition is found on a sleeve terminal, the incoming elevator is stopped and remains in contact with that set of terminals. This leaves a connection established through which final selections now take place.

As the called subscriber's line may be in any one of the five banks, the final frame must make brush selection through use of "A" commutator segments just the same as the district office, or incoming selector does, except that the sender gets its information from the registration in the "H" group of register relays.

When brush selection has been completed the sender directs the final brush up for group or tens selection, the selected group depending on the registration in the "T" group of register relays. Tens selection is made in the same way that group selection is made on district, office or incoming selectors. The "B" commutator segments are numbered from 0 to 9 and are so positioned that they correspond to every tenth subscriber's line terminal

TCI Library: www.telephonecollectors.info

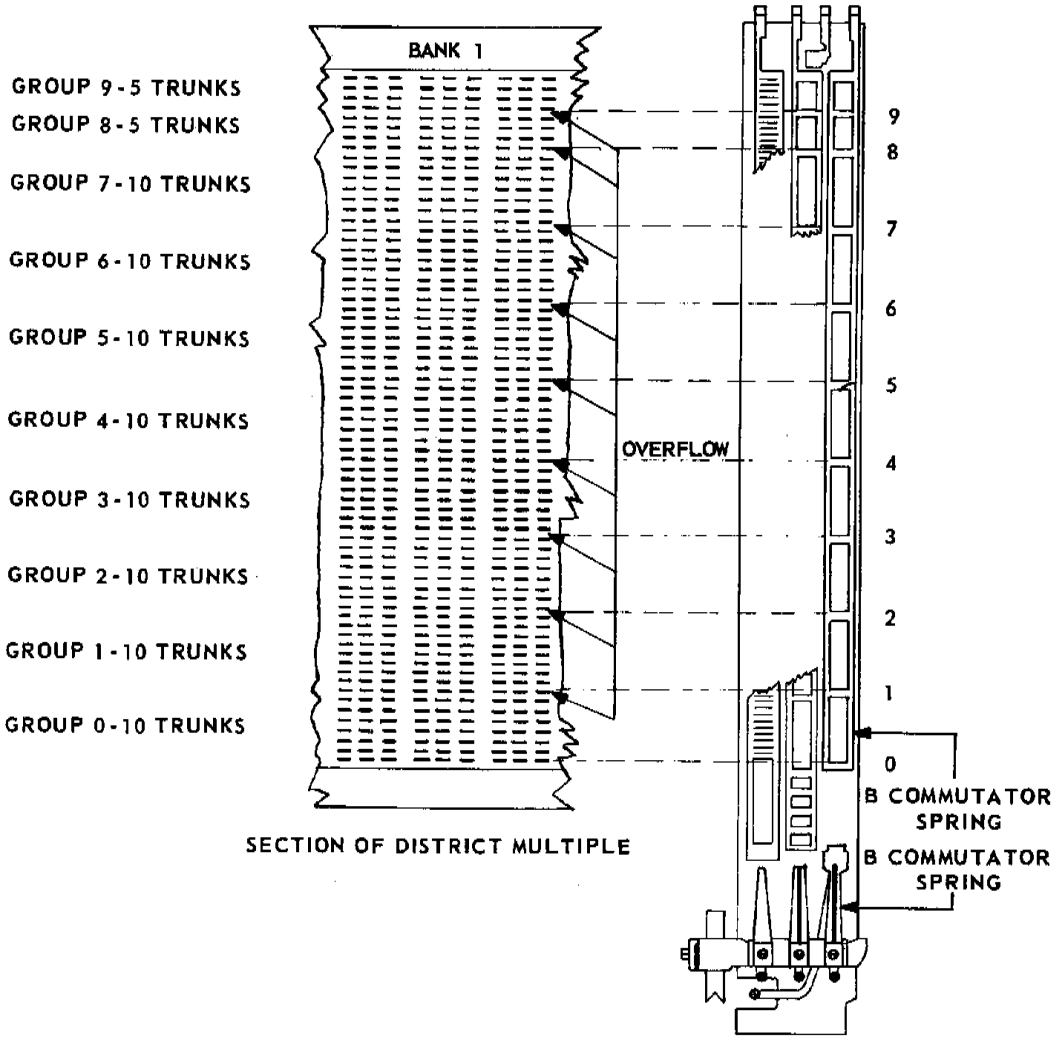

Figure 5-17 District Brush Selection

TCI Library: www.telephonecollectors.info

on the banks. By this arrangement when the sender has counted the proper number of pulses from the "B" commutator it stops the final elevator, leaving the tripped brush on a line whose number ends in 00, 10, 20, 30, 40, 50, 60, 70, 80 or 90. The wires to the brush are open circuited in the final wiring at this time so that such lines are undisturbed while units selection drives the elevator up again from 1 to 9 terminals if necessary for connection to the called line as determined by the units digit of the dialed number.

Units selection is under control of the sender, which counts pulses from the "U" commutator segments and when the number of pulses properly match the number registered on the "U" register relays it stops the up-drive, leaving the final selector on the called line.

When selections have been completed, the link discharges the sender and selects an idle line finder-district circuit to be used later when that link's turn to be used arrives again.

The talking path is closed between the line finder and the district selector under control of the sender just before it is discharged, completing the connection between the calling and called subscribers. Intermittent ringing current is then applied automatically by the incoming selector to the called subscriber's line until he removes the receiver.

When the conversation is finished, replacing the receivers on the hooks causes all selectors through which talking occurs to return to normal, where they await reselection for another call.

TCI Library: www.telephonecollectors.info

CHAPTER 6

PRINCIPLES OF CROSSBAR SWITCHING

6.1 INTRODUCTION

Crossbar systems were developed in the mid 1930's to counteract some of the disadvantages of the Panel System. The panel selector switches, which introduced a high degree of noise, were eliminated from the new systems as well as their associated power driven elements. Instead, virtually noise-free talking paths were developed by using a radically new type of switch called a crossbar switch and relays with precious metal contacts. The crossbar common control units made possible more efficient operation of line and trunk network connections, derived the maximum use of intraoffice and interoffice trunk circuits and eased the overflow traffic during busy hours into alternate routes. Furthermore, the crossbar system provided the additional advantages of shorter call completing times and reduced maintenance.

6.2 THE CROSSBAR SWITCH

The basic element of any crossbar system is the crossbar switch, through which all talking connections are made. The crossbar switch is essentially a relay mechanism consisting of ten horizontal paths and ten or 20 vertical paths, depending on what size switch is needed. Any horizontal path can be connected to any vertical path by means of magnets. The points of connection are known as crosspoints. The switch with ten vertical paths has 100 crosspoints and is called a 100-point switch; the one with 20 vertical paths has 200 crosspoints and is called a 200-point switch. Figure 6-1 shows a partial perspective view of a crossbar switch.

Horizontal Paths: There are five selecting bars mounted horizontally across the face of each switch. Each selecting bar has flexible selecting fingers attached to it, one finger for each vertical path, and the bars can be rotated slightly to cause the select fingers to go either up or down.

TCI Library: www.telephonecollectors.info

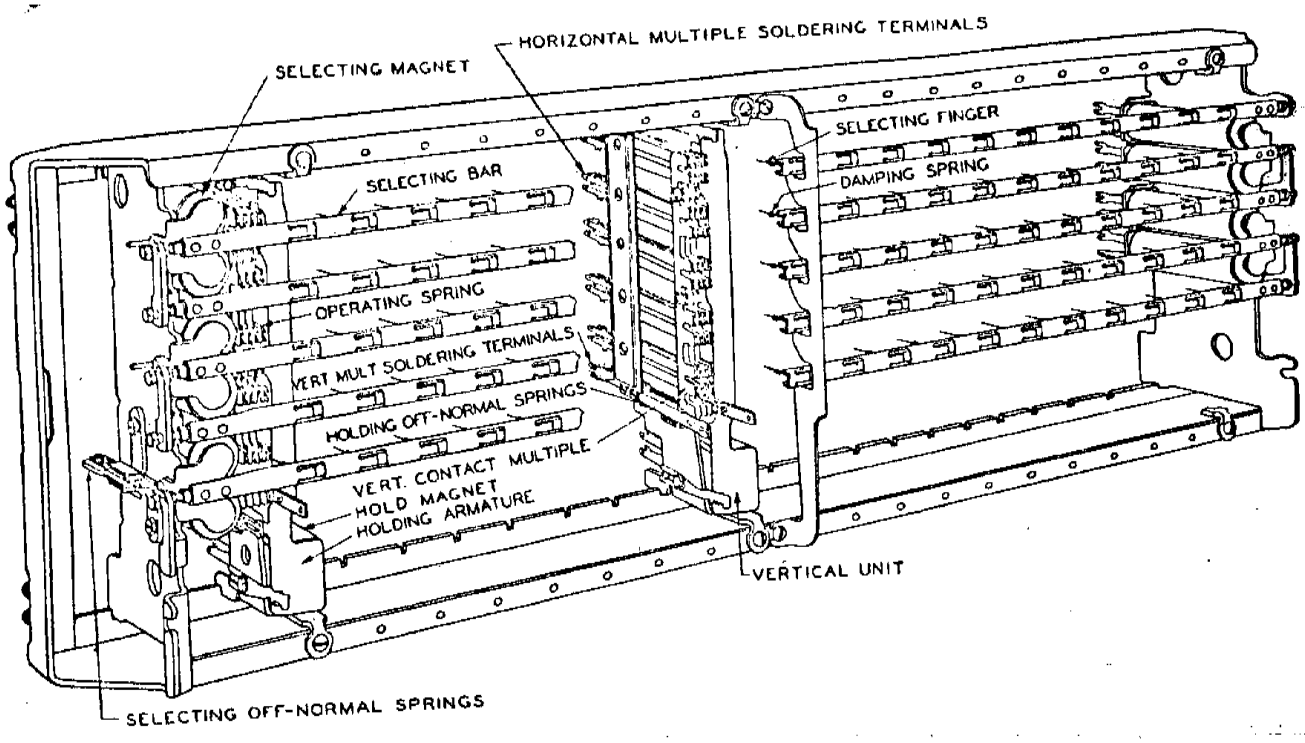

Figure 6-1 Partial Perspective View of a 200-Point Crossbar Switch - For 20 Vertical Units

Vertical Paths - Ten or 20 vertical units are mounted on the switch and each unit forms one vertical path. Each unit operates under control of a hold magnet and has ten groups of contacts (one for each horizontal path) associated with it.

3-Wire or 6-Wire - Each group of contacts may consist of three to six pairs of contact springs. A switch is classified according to the number of crosspoints and pairs of springs, for example, a 200-point, 3-wire crossbar switch or a 200-point, 6-wire crossbar switch.

Operation of the Crossbar Switch - The normal position of the selecting fingers is horizontal, lying between two groups of contacts. When a select magnet operates, the selecting bar is rotated and one of the two horizontal paths available to this bar is chosen. The selecting fingers now lie in front a group of contacts as shown in Figure 6-2.

TCI Library: www.telephonecollectors.info

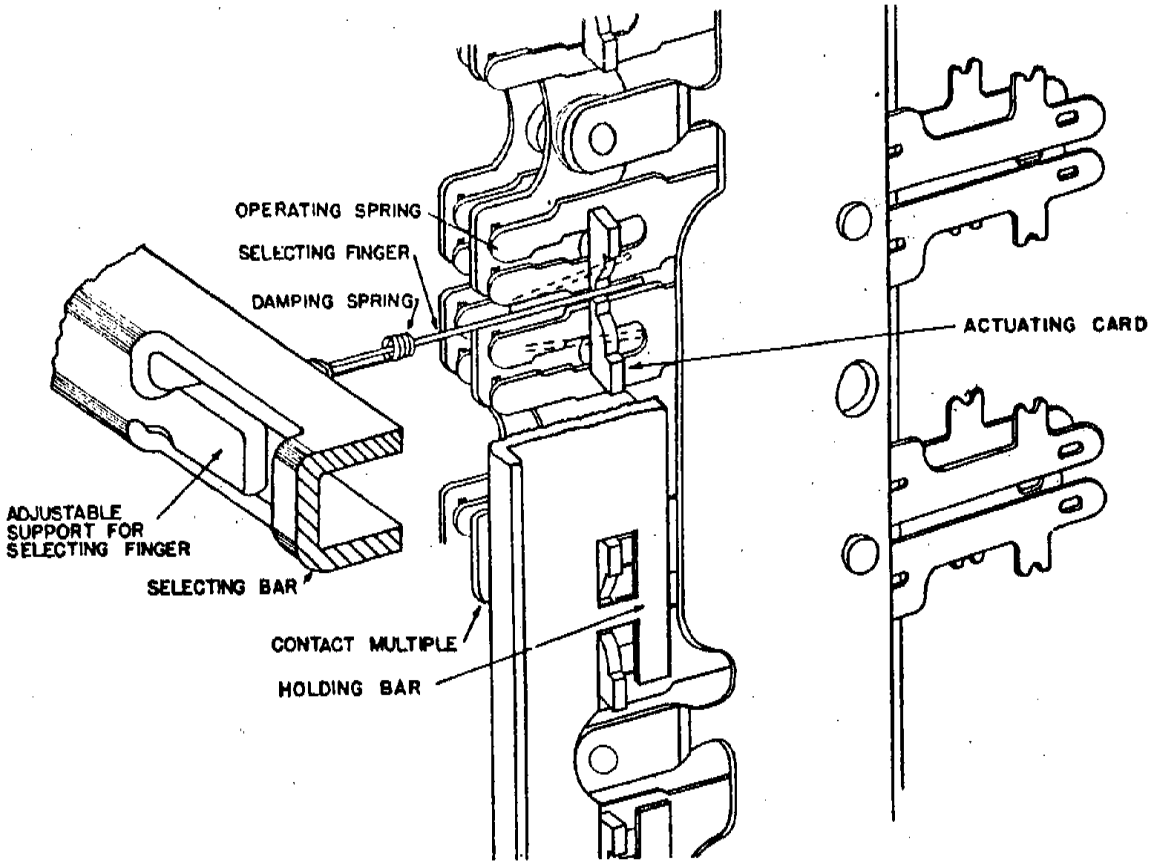

Figure 6-2 Crossbar Switch Selecting Mechanism

The hold magnet of the vertical path to be connected to this horizontal path then operates its holding bar which, using the selecting finger as a wedge, causes the group of contacts beside the selecting finger to operate, thus connecting the horizontal and vertical paths. Both the select and hold magnets must be operated in order to close a crosspoint. The other groups of contacts on this vertical unit do not operate since there is no selecting finger between them and the holding bar.

After the operation of the hold magnet, the select magnet releases returning the horizontal bar and all of the selecting fingers back to normal, except those actively held by operated hold magnets. The finger used to establish the connection, being flexible, remains wedged against the

TCI Library: www.telephonecollectors.info

contacts by the holding bar, and in this way, keeps the contacts operated. When the hold magnet releases, the connection is released and the selecting finger returns to normal. Since the selecting finger tends to oscillate upon being released, damping cones are provided on the hold magnet armature to act in conjunction with the damping springs to minimize these oscillations.

Only one selecting magnet on a switch may be operated at one time if the closing of more than one crosspoint on a vertical unit, with the resulting double connection, is to be avoided. More than one connection throughout a switch may exist at the same time without interference after the crosspoints for each have been closed, but those crosspoints must each be closed one at a time.

The handling of one connection at a time in a switch, later extended to handling one call at a time in a frame of switches, is a fundamental operating principle of all crossbar systems. Thus double connections are avoided and the time required by a control circuit to establish each connection is reduced to a minimum.

6.3 NETWORKS

Groups of interconnected and interrelated crossbar switches, structured to form a system of metallic paths used for talking and for signals such as tones and ringing, comprise a switching network. Networks and the paths of a network are selected and controlled by relay logic units. Collectively, these relay logic units in crossbar systems are known as the "markers".

In developing a switching network using crossbar switches it was possible to vary the size of each group of subscribers and trunks and still satisfy the requirement that a telephone switching network have multiple access from each subscriber to any other subscriber or trunk.

Depicted in Figure 6-3 is a typical two stage grid network. Each switch block in both stages may be considered to have ten inputs and ten outputs. Within each block the switches can connect any input to any output. The switch units within the blocks may be either forward or backward-facing without affecting the validity of the network as a

TCI Library: www.telephonecollectors.info

connecting means. The ten outputs of each input switch block fan out equally to the ten output switch blocks to give a total of 100 links spread uniformly between inputs and outputs. However, if each group (group size assumed to be ten) is spread equally over the ten output blocks, each individual output of a group is accessible to a separate link from a particular input group. Thus, any input can reach an output group via ten links, but a particular link and a particular output must be matched for a successful connection. This type of network then provides adequate access into an output group. Since the whole switch structure represents a coordinate grid with each intersection of horizontal and vertical forming a crosspoint with no directional motion, either side can be considered as the input.

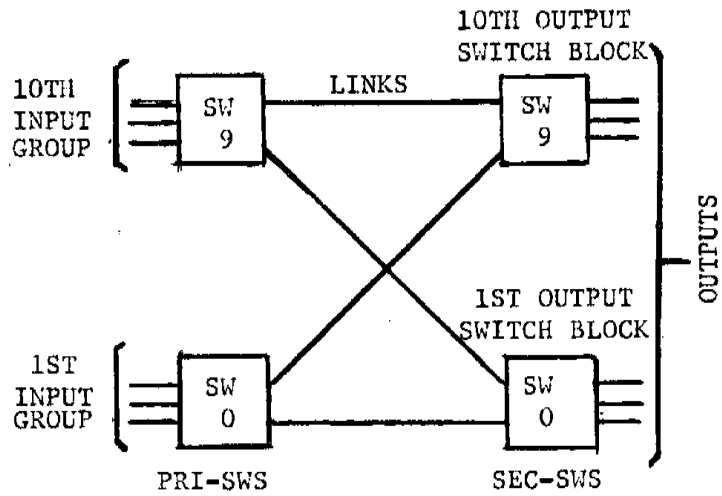

Figure 6-3 Two-Stage Grid Network

The input switches of the grid are usually designated as primary switches, and the output switches as secondary switches. The basic requirement is that each primary switch have access via at least one link to each secondary switch group. The link spread between switch groups is almost invariably laid out in an orderly fashion for ease of control and administration. For example, in Figure 6-3 note how the 0 outputs of all primary switch groups connect to the 0 secondary switch group, the 1 outputs connect to the 1 secondary switch group, and so forth. In allocating secondary terminations of links, the output terminal number on the primary switch designates the secondary switch number, and the primary switch number designates the secondary switch terminal. This is characteristic of primary-secondary grids.

TCI Library: www.telephonecollectors.info

With crossbar switches, a convenient size for the grid is ten switches high, both primary and secondary. There are usually ten or twenty link groups per switch, although in the latter case the links are usually considered as two groups of ten per switch. There are occasional situations in which the link spread is different from that described, but these are special cases.

When it is recognized that a two-stage grid wired as in Figure 6-3 is satisfactory for connecting any input to one of a group of outputs, it is not difficult to extend the grid to provide for connection to a particular output. It is only necessary to add a third stage, the links which will duplicate the link spread between the first two stages. This is shown symbolically in Figure 6-4 where each stage is assumed to be ten switch blocks high. Examination of this network will show that any network input can be connected to any network output over ten matching pairs of paths, usually called channels. To determine the set of ten paths which can be used, it is only necessary to know the input and output switch blocks involved. The identifying number of both links in a matching pair are the same when the numbers are assigned according to the position of the link on the switch blocks of the primary and tertiary stages.

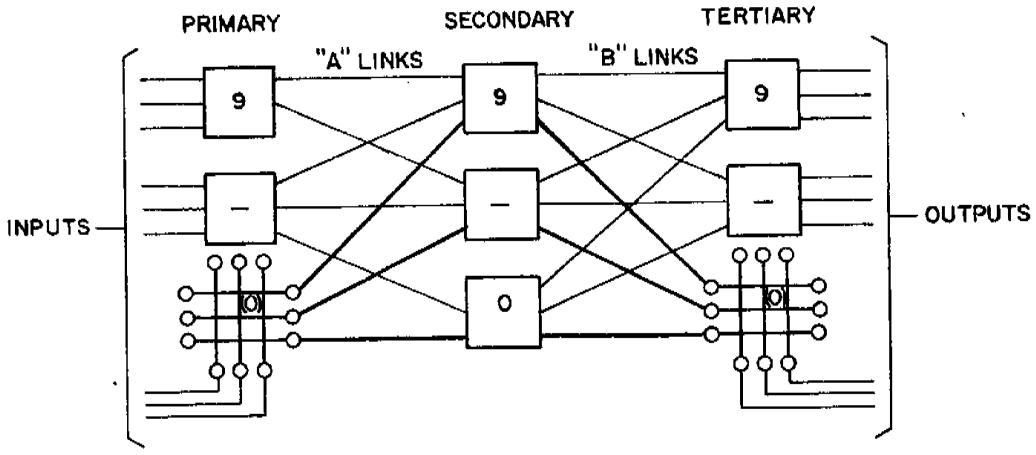

Figure 6-4 Three-Stage Switching Network

TCI Library: www.telephonecollectors.info

For a call between an input on primary switch block 0 and an output on tertiary switch block 0, the links which can form permissible channels are shown in heavy lines on Figure 6-4. If the input were on primary switch block 1 while the output remained unchanged, a new set of "A" links are required to match with the original set of "B" links. Since the links that make up the matching channels are available to more inputs and outputs than there are links, blocking on a particular call can occur. Since a channel can be made busy by either link in a matching pair, idle "A" and "B" links may, and frequently will, exist in the busy channel group. The hazard of blocking is reduced if the control means always assigns channels in a definite order instead of at random.

The three-stage grid is not generally suitable as an overall network because of the relatively limited number of paths it provides. However, it is useful for small switching systems. In the larger switching systems, the interconnecting paths are most frequently made up of a network of two stages of primary-secondary grids, which is, in effect, a four stage grid. A typical arrangement of these grids is shown in Figure 6-5. The fourth stage, which is actually the primary stage of the output grids, results from splitting the secondary switches on Figure 6-4. The interconnections between grids (called junctors) are not necessarily distributed in the same manner that links are within a grid. It is merely required that at least one junctor per secondary switch of each input grid connect to one primary switch of each output grid. The junctors are wired between switches of corresponding number on the opposing grids. This provides, as a minimum, one junctor to match with any pair of originating and terminating links. If the junctors are numbered in accordance with the number of the switch on which they originate or terminate, the result is a simple system of coordinating links and junctors into channels. For example, if in Figure 6-5 an input on input grid 0, primary switch 0 requires connection to an output on output grid 1 secondary switch 1, ten channels are available utilizing a particular "A" link group, a particular "B" link or junctor group, and a particular "C" link group. From input to output there exists matched A, B and C links designed to provide a pattern of fixed wired paths or channels. With this wiring scheme, previous calls equal in number to the size of the link or junctor group can block a call to an idle output, since the use of any single element in a channel makes the whole channel busy.

TCI Library: www.telephonecollectors.info

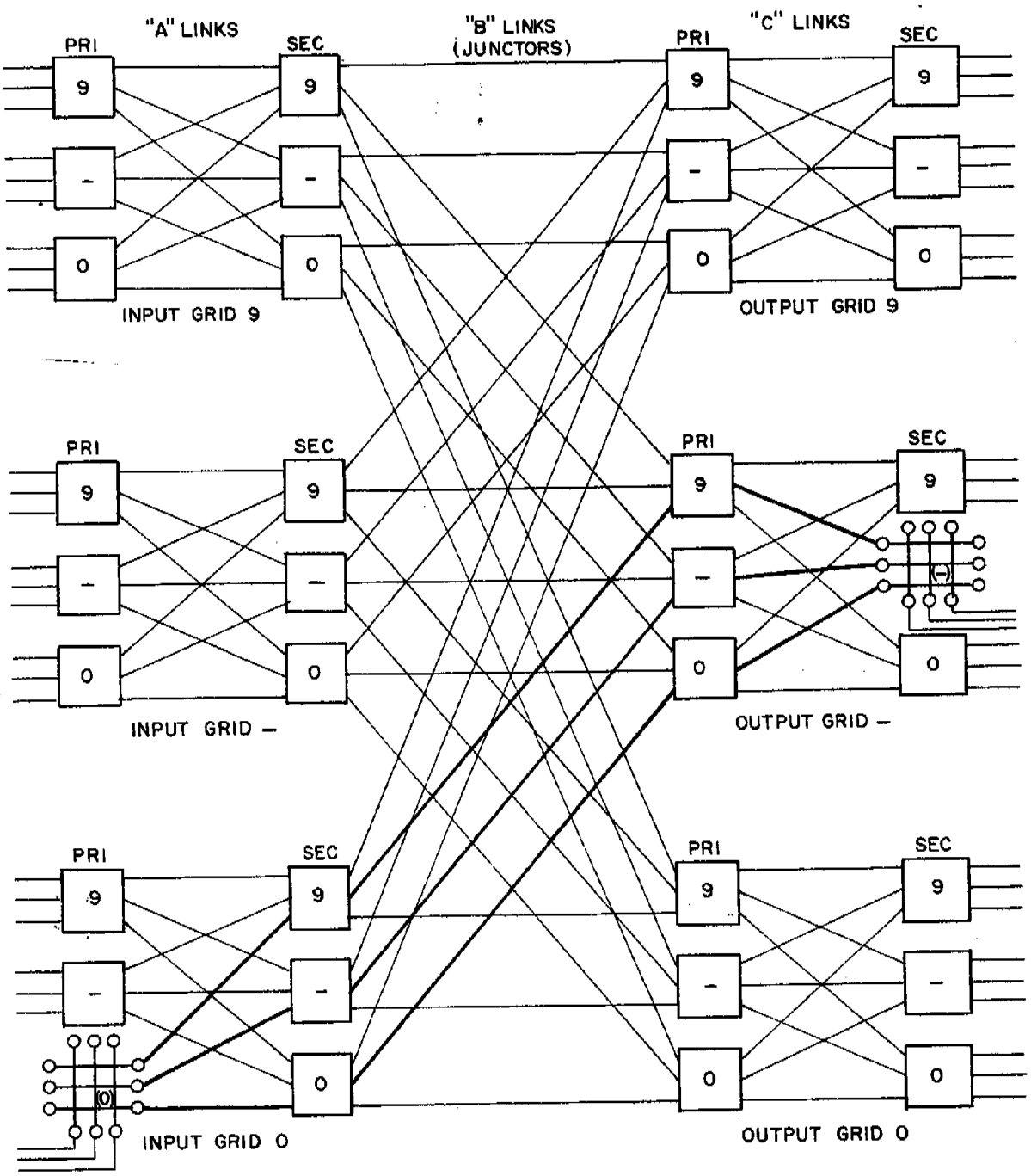

Figure 6-5 A Four-Stage Switching Network

TCI Library: www.telephonecollectors.info

6.4 NETWORK SWITCHING CONTROL

In applying the principle of the grid network to a telephone switching system we can see by inspection of Figure 6-5 that the selection of a path or channel through the grid, or switching network using crossbar switches, requires knowledge of both input and output assignments. The selection of a channel in a crossbar system is commonly called a marking function. Following this line of reasoning the marking function cannot be performed until the digit information of the telephone number has been received either in whole or part, depending upon the particular control arrangement used. It can also be reasoned that since the group of outgoing trunks to a particular destination is distributed over the secondary switches of the output group, some means is required for associating a code number and a number of widely distributed outgoing trunk locations. Besides this association there must be some means of testing these widely distributed locations and making logical decisions regarding availability and selection. It is not only possible but very probable that the digit information dialed by the subscriber is received at the central office before the marking function is completed. Therefore, in order to transmit the digit information to the next office some means of storing and regenerating digits is required.

Some of the major functions that must be accomplished by the control circuits of a marker system are:

a. Registration: Counting and storage of the digits dialed by the customer.

b. Translation: Conversion of code numbers into equipment locations such as office code into outgoing trunk locations, of the subscriber's number into his particular equipment location.

c. Testing and Selection: Making busy tests of possible outgoing trunks or paths through the switching network and then selecting one to be used on each call.

d. Outpulsing: Generation of pulses to match the stored digit information and of the proper type to be used by the next switching office.

TCI Library: www.telephonecollectors.info

e. Connection: Means of temporarily interconnecting various circuits for controlling circuit action or passage of information.

f. Various other logical decisions regarding items such as identification of calling subscribers, authorized or unauthorized calls, quantity of digits to be outpulsed, type of pulsing required and alternate action to be taken due to busy or trouble conditions.

The circuits for accomplishing the above functions are physically separated into common groups of frames or units. There is a great variation of operating time between the various functions as well as variations of circuit size for each function.

6.5 GENERALIZATION OF THE MARKER SYSTEM

Figure 6-6 shows a schematic representation of an interconnecting network and its associated common control or marker. For the moment, the central office network will be considered as being split into separate originating and terminating halves, and the network of Figure 6-6 may represent either half. If it is the originating half, the inputs are subscriber lines and the outputs are trunk groups. If it is the terminating half, the inputs are incoming trunks and the outputs are subscriber lines. If a tandem[1] operation is considered, Figure 6-6 may represent the entire office and both inputs and outputs are trunks. In any case, associated with the inputs are registers which receive the call information and which have access to the marker. Access from the inputs to the register can be achieved in a variety of ways, either through separate connectors or through the main interconnecting network.

On an originating call, the register must receive information from the subscriber before it can utilize the services of the marker. In the general case the office code is sufficient to identify the required outgoing trunk group, and as soon as it has been received, the register can request the marker to set up the connection between the subscriber's line and an outgoing trunk. When access is established between the register and marker, the register transfers the office code together with information of the location of the calling input, to the marker. Since this latter information

[1] Tandem Central Offices are used primarily as intermediate switching points between other central offices.

TCI Library: www.telephonecollectors.info

is used for control purposes, the register establishes means of determining the calling input location for use by the marker.

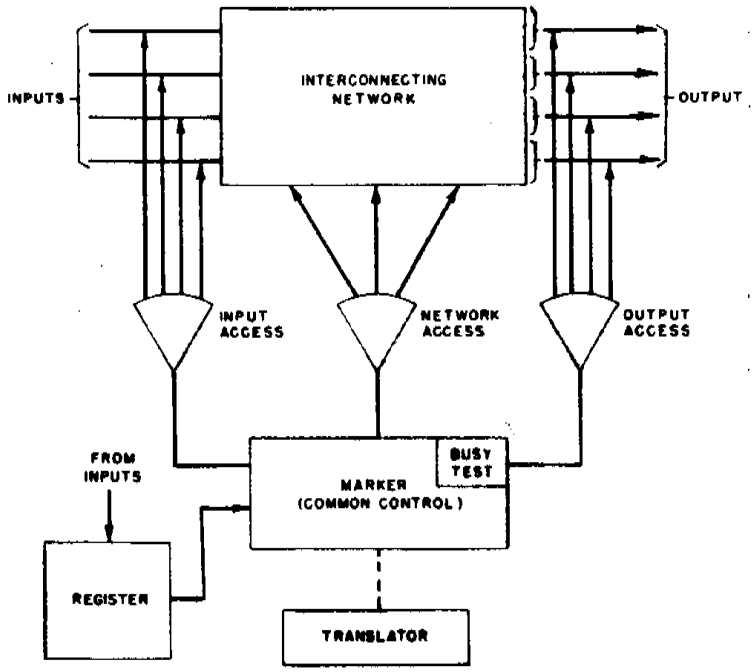

Figure 6-6 Generalization of Marker System

It is highly desirable not to have a fixed relationship between office code and trunk location on the switches. Furthermore, the nature of grid networks almost necessarily precludes such a relationship. Therefore, when the marker receives the office code from the register, it determines by translation how to gain access to the trunk group, plus any other pertinent information such as the type of trunk, pulsing required, customer charges, etc. Since it is neither practical nor desirable to establish a method of automatically hunting over adjacent terminals by the crossbar switches themselves, the individual trunks of a group can be dispersed over the whole network with considerable freedom. This, however, requires that the trunk busy test function be concentrated in the marker and that access be provided from the marker to the test leads of the trunk group. Successive individual tests of the trunks take too much time, consequently, the test leads are grouped for simultaneous testing.

TCI Library: www.telephonecollectors.info

There are several ways in which the marker can determine the location of a particular trunk. On Figure 6-6, a generalized access to the output groups is shown. This access may include control paths in addition to the testing paths. At the same time that the marker is locating and connecting to the output terminal of the network, it connects to the particular input terminal being served, through the input access paths.

As a result of these two actions the marker has control of the terminal points that must be connected together. The marker examines the individual network links which match to form a channel and connects together an idle set. It is desirable to examine all links simultaneously, rather than on a progressive basis, in order to save time. Within the marker, the link testing paths, are grouped to associate the "A", "B" and "C" links into matching sets so that the channel matching circuit of the marker can determine in which channels all links are idle. One is selected and the channel control circuit transmits the control signals over the access paths to establish the connection.

On Figure 6-6 only one marker is shown. This is obviously the most efficient means of control, concentrating as it does all test and control features into a single equipment unit. With relay type control circuits, the traffic volume of an average office requires the use of several markers.

As soon as more than one marker is introduced into a system, the problems multiply rapidly. Since it must be possible to place a call from any input switch to any output switch, access must be provided from each marker to every grid in the network. Each access path consists of a large number of leads which are necessary to test and establish paths on a single switch, although only a small fraction are utilized on a particular call. A simplified block schematic indicating how the access problem grows with several grids and markers is shown in Figure 6-7. When so many leads are involved, the only practicable method of handling access is to use multicontact relay connectors. The connectors can be designed so that control signals cause selection of the individual groups of frame leads applicable to a particular call. A limited number of leads then pass from markers to the connectors on the grids and the fanning out of the leads takes place within the grid frame. Furthermore, much of the connector equipment can be used in common by all control circuits.

TCI Library: www.telephonecollectors.info

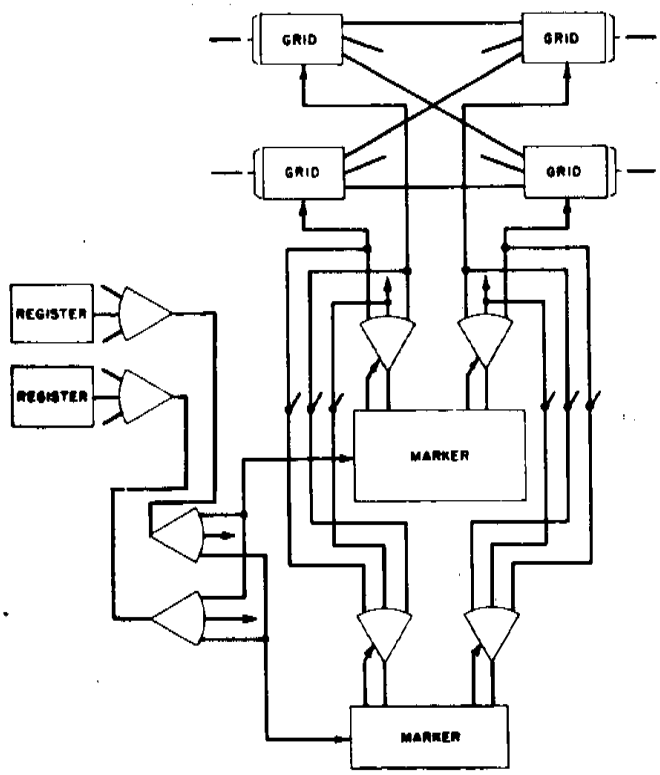

Figure 6-7 Several Markers Applied to a Network of Grids

It is inherent in most common control systems that only one control unit can work into an individual frame at a time. Otherwise there is mutual interference that may permit double connections or mutilated calls. This requires an elaborate system of lockouts in the connectors to provide exclusive access. A result of this is that the markers may block each other in the handling of calls and are subject to delays while waiting for frames to become idle. This, of course, reduces the efficiency of use of the control units. In designing systems care must be taken that such blocking cannot cause complete exclusion between control circuits. For example, if two markers simultaneously require access to the same input and output frames and each is able to seize one of the two frames, an impasse exists. This difficulty can be obviated by designing the circuits so that the grid frames must be seized in a definite order (output before input, for example). Preference assignments for each frame will also help to eliminate attempts of double seizure.

TCI Library: www.telephonecollectors.info

These considerations, in addition to the fact that marker units are very complex and expensive, make clear the necessity of keeping the holding time per call very low. A small holding time reduces the required number of markers, with their associated access, and increases their efficiency of use. Marker holding time is to a large extent dependent upon the actuating time of the switches making up the interconnecting network. For this reason common control of the type discussed here is only economical when a high-speed switch mechanism is available. The necessity for speed has also imposed the use of fast-acting circuit elements in the control circuits themselves. The present result of this is that common control circuits are almost invariably all-relay devices with some utilization of electron tubes. This has a definite effect upon the complexity of control circuits since many circuit functions that are performed very simply, although slowly, by a multiterminal switch require intricate arrangements of many relays for equivalent action.

An important aspect of marker systems is that the control circuits themselves must incorporate intricate checking features to insure that they are functioning properly. When a trouble condition, serious enough to block a call is encountered by a marker, additional efforts must be made to take care of the call or it will be left hanging in the air, so to speak. Such efforts are, however, facilitated by the nature of common control which is capable of making subsequent attempts to complete a call via second trial features. In theory it is possible to make an unlimited number of additional trials to complete a call. However, each trial requires extra marker usage which reduces the availability of markers to other calls. In practice, therefore, additional trials may be restricted to two.

After the marker has picked a trunk or a called line, it may discover a channel busy condition. If there are alternate channels available, they will be tested as a second attempt. On originating calls to outgoing trunk groups, the next recourse is to choose a new trunk in the same group which will usually make available a new set of channels. When a marker encounters an all-trunks or all-channels busy condition, it also must take some alternative action. Common control is ideally suited for utilizing alternate routes, since it tests trunks early in the control-circuit cycle before paths are set up. Hence, such systems permit optimum use of direct and tandem trunking facilities. When the

TCI Library: www.telephonecollectors.info

control unit determines that all trunks in a particular direct group are busy, it can, with very little additional holding time, request the translator for directions to an alternate (tandem) trunk group. The control circuit then handles the call in the same fashion as though it were the original attempt. If there are additional tandem routes available, the alternate routine process can be continued as far as necessary. If all usable trunk groups are busy, the final route, in effect, is to a tone source or recorded announcement which can return a trunks busy or overflow signal to the subscriber. On terminating calls to a subscriber line, if the line is busy, a line busy signal is transmitted back to the originator.

The marker translators must provide full flexibility in furnishing information appropriate to each office code. At the present time the equipment usually consists of relay circuits plus changeable cross-connection fields on which the information for each code can be wired. Changes are relatively simple to make and the number of translator units is small. Some toll switching systems use punched cards which interrupt light beams in various patterns to provide translation information and some use electronic translators which utilize stored program control.

The information furnished by the office code translator includes the location of the trunk group for immediate use in establishing the originating connection, alternate routing directions, the type of pulsing and the number of digits to be pulsed to the terminating office. The necessary signaling information must be transferred to an outpulsing circuit. The latter circuit can be incorporated in the originating register or provided as a separate unit.

The outpulsing function is, of course, always necessary for communication with other offices and, in some systems, with the terminating end of the same office. The outpulsing function may be furnished as part of the register unit or may be furnished as separate units. If the register calls in a marker after the office code has been received, but before the rest of the called number is received, the register and outpulsing functions may be combined as shown in Figure 6-8A. This arrangement allows the outpulsing to start before registration of all digits is completed. If the register does not call in the marker until all digits are received, then separate register and outpulsing units are required as shown in Figure 6-8B.

TCI Library: www.telephonecollectors.info

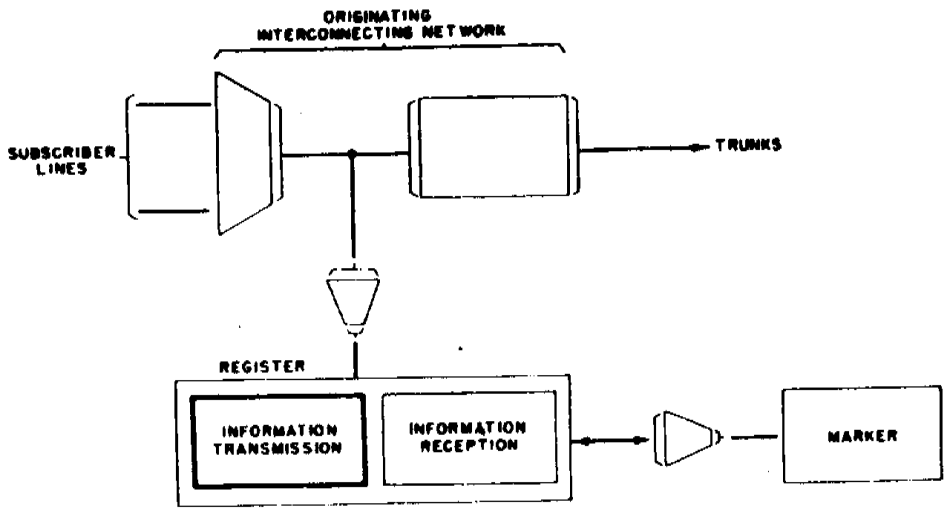

A ASSOCIATED WITH REGISTER

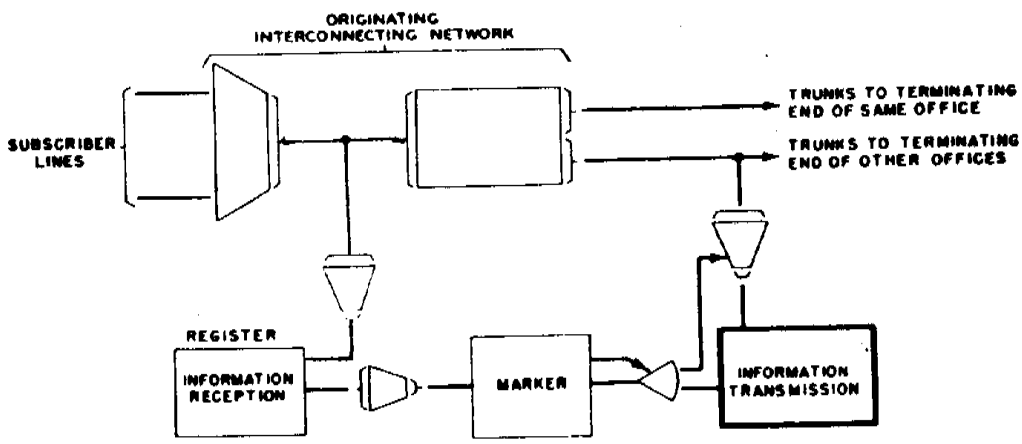

B ASSOCIATED WITH TRUNK

Figure 6-8 Location of Outpulsing Functions in Marker Systems

TCI Library: www.telephonecollectors.info

6.6 DIRECTORY NUMBER TO LINE NUMBER TRANSLATION

With grid type networks, line number to switch location translation, similar to office code translation, is almost invariably necessary. This comes about, not only because it is difficult to set up a logical relationship between line directory number and switch location with grid networks, but because the inherent advantages of flexibility. Therefore, line translators must be provided which enable the control circuit to determine the line location from the directory number. This implies that the overall control of terminating calls is similar to that for originating calls. The principle difference derives from the translation technique.

The considerations applying to line number translation are quite different from those obtaining for office code translation. The difference is primarily a matter of magnitude since line numbers in one central office may run up to 10,000 while office codes are well under 1,000. The resulting size and cost of the line translator is such, with present techniques, that it is uneconomical to provide one per marker. The alternative is to furnish common translators with access from all markers. Advantage can be taken of the probability that simultaneous calls will be to lines well distributed throughout the line number series. This permits breaking up one large translator into several parts, each containing the information pertinent to a grouped fraction of the lines. Each marker must have access to all subdivisions of the translator; the access must be exclusive to prevent mutual interference. This is the plan followed in present-day marker systems where the translator is known as the number group.

A sketch of this translation arrangement is shown in Figure 6-9. For convenience, each translator subdivision is shown as comprising 1,000 lines, although this number may vary from system to system depending upon traffic considerations and the particular translation method employed. It is also necessary to employ with the marker some form of pretranslation to determine the particular translator subdivision to use.

In addition to called line location and Private Branch Exchange hunting directions, the translator must also furnish information on the type of ringing required. This is later used to set up the trunk circuits to send out the correct ringing signals to the called subscriber.

TCI Library: www.telephonecollectors.info

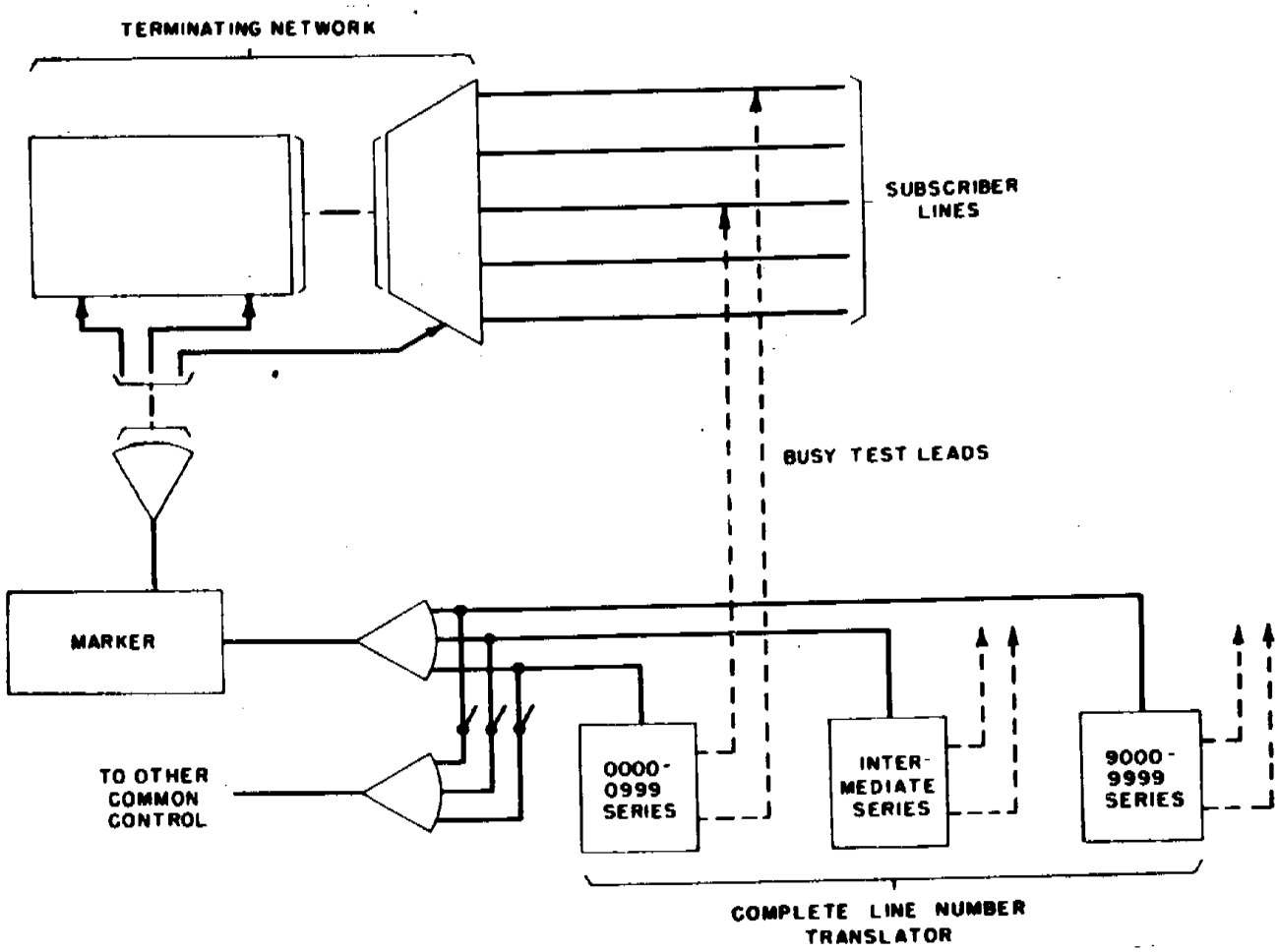

Figure 6-9 Number Translator in Marker Systems

6.7 PULSING LANGUAGES

Crossbar systems are designed to interpret the various types of pulsing used in other systems. Senders, for example, receive digits in the language of the calling central office and outpulse digits in a different language as required by the receiving central office. Some of the major pulsing techniques are Panel Call Indicator, Multifrequencing, Key Pulsing, Dial Pulsing, Revertive Pulsing, the Frequency Shift Pulse and Touch-Tone Calling.

TCI Library: www.telephonecollectors.info

A. Panel Call Indicator

The panel system, for example, receives digits in one machine language called Panel Call Indicator (PCI). In this language the tandem office receives from the originating central office a set of timed code pulses. Each Panel Call Indicator digit consists of four pulsing periods during which time four different signals are uded in combination to represent the various digits. The four signals are:

a. Light Negative	(LN)	(6500 ohm battery on ring)
b. Negative	(HN)	(115 ohm battery on ring)
c. Light Positive	(LP)	(6500 ohm battery on tip)
d. Blank	(-)	(Open circuit on tip)

These pulses are generated by sequence switches in the panel office and by relays in the crossbar offices at the rate of three digits per second. PCI digits 0, 1 and 9 for example would appear as shown in Table 6-1.

Table 6-1 PCI

Digits	1st Pulse Period	2nd	3rd	4th Pulse Period
0	-	LN	-	LN
1	LP	LN	-	LN
9	-	LN	LP	HN

B. Multifrequency

On the other hand, multifrequency pulsing or MF is a method of pulsing in which the identity of ten digits (0 to 9) and the start and end signals are each determined by various combinations of two each of six audio frequencies. The two frequencies for each digit or signal are transmitted simultaneously over the trunk. The frequencies are 700, 900, 1100, 1300 and 1500 CPS and are coded 0, 1, 2, 4 and 7 respectively. The sixth frequency 1700 CPS controls the start and end signals. Digit 1, for example, uses codes 0 and 1 and frequencies 700 and 900; digit 3 uses codes 1 and 2 and frequencies 900 and 1100. Digit 0, the exception, uses codes 4 and 7 and frequencies 1300 and 1500.

TCI Library: www.telephonecollectors.info

C. Key Pulsing

The language of the manual office of course is the spoken word. However, to transmit intelligence from a manual office to a mechanical office the key pulsing method is used. There are several key pulsing languages: 2 wire D.C., 3 wire D.C., 5 wire D.C. and MF key pulsing. In all of these the operator is supplied with a 10 button keyset which she uses to generate the signals which represent the various decimal digits. In the 2 wire D.C. key pulsing scheme, to cite just one of the above key pulsing methods, the system uses four register relays 1, 2, 4 and 5 and the sum of the number of relays operated indicates the digit recorded.

D. Dial Pulsing

The standard telephone with its rotary dial produces dial pulses. Dial pulses are generated by the customer's dial or by senders and consist of breaks or interruptions in the circuit happening at a speed of ten pulses per second. Ten breaks correspond to digit 0 while one to nine interruptions correspond to digits 1 to 9 respectively. Some dial pulse senders and registers can operate at a speed of twenty pulses per second.

E. Straight-Forward

When a tandem office establishes a connection to certain switchboard operators ahead on the straight-forward (SFD) basis, the forward operator receives a request for her action verbally from the originating point through the tandem office.

F. Revertive Pulsing

Revertive pulsing or RP is a system of DC pulsing in which intelligence is transmitted in the following manner.

a. The near end presets itself in a condition representing the number of pulses required, and in a condition to count the pulses received from the far end.

b. The terminating end transmits a series of pulses by momentarily grounding out its battery supply until the originating end breaks the DC path to indicate that the required number of pulses has been counted.

TCI Library: www.telephonecollectors.info

G. Frequency Shift Pulse

Frequency Shift Pulse represents an innovation in signaling. An electromechanical unit temporarily stores the binary digits to be transmitted and places mark or space signals on two sets of six leads going to a binary encoder. Continuous transmission is achieved by placing one digit (6 bits) on one of two sets of 6 leads and at the same time placing the next digit condition on the other set of 6 leads. At the terminal end these modulated frequencies are converted to signals on the two sets of leads to operate relays representing digits. FSP employs electronic computer techniques to transmit 200 bits per second over narrow band transmission facilities. The transmission consists of a synchronizing bit called a key pulse start signal followed by 6 bits representing a digit. The bits are 5 milliseconds in duration. A mark or space condition is set for each bit position and each digit is given a code of two mark and four space bits. The bits are arbitrarily designated 0, 1, 2, 4, 7 and 10. The coding is similar to that for multifrequency where two frequencies represent the digit, except for 0 which uses 4 and 7. The 10 bit is used for the key pulse start and finish signal. Digits are transmitted by modulating 1170CPS $\pm$ 100CPS; 1070 CPS represents a mark and 1270 CPS represents a space.

H. Touch Tone

In Touch-Tone calling the customer's telephone set is equipped with a keyset instead of a dial. The keyset uses a variation of multifrequency pulsing to transmit digit information back to the central office. Seven audio frequencies are used in different combination of two to translate ten decimal digits. The keys form three horizontal rows on the telephone set; the first row keys are: 1, 2, 3; the second row, 4, 5, 6; the third row, 7, 8, and 9. Centered below the last row is the "0" key. The horizontal frequency codes corresponding to each horizontal key row are 0, 3, 6 and 9. The vertical frequency code corresponding to the three vertical columns of keys are: 1, 2 and 3. Depressing a key causes the associated horizontal and vertical frequencies to be transmitted to the central office. Thus any depressed key represents the appropriate decimal digit derived from the additive value of the horizontal and vertical frequency codes. Again "0" is the exception in that it utilizes codes 2 and 9.

TCI Library: www.telephonecollectors.info

CHAPTER 7

NO. 1 CROSSBAR AND CROSSBAR TANDEM SYSTEMS

7.1 NO. 1 CROSSBAR SYSTEM

A. GENERAL

The No. 1 Crossbar System was developed in the mid-1930's to overcome some of the disadvantages of the Panel System. For instance, No. 1 Crossbar offered better transmission characteristics by using precious metal contacts in talking path connections; gave one appearance to each subscriber line on the frames for both originating and terminating traffic; and PBX hunting lines could be added without number changes. No. 1 Crossbar also made possible shorter call completing times and required less system maintenance.

Since it was expected that this system would be used largely in panel areas, revertive pulsing was employed for both incoming and outgoing traffic. The No. 1 Crossbar System is also a common control system; its originating and terminating equipment each has its own senders which function with the markers to complete subscribers' connections. A simplified view of the overall equipment arrangement is shown in Figure 7-1.

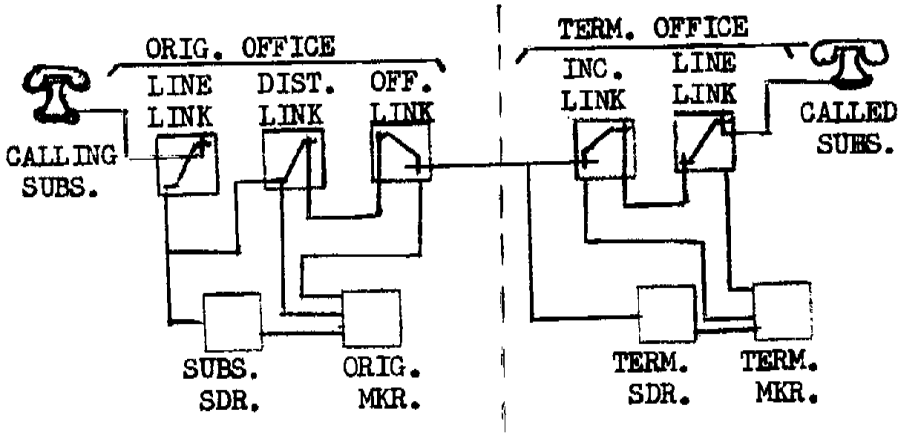

Figure 7-1 Simplified Block Diagram - No. 1 Crossbar System

TCI Library: www.telephonecollectors.info

From a traffic standpoint the major No. 1 Crossbar dial system frames may be divided into two general classes:

Originating Equipment

Line Link Frame
District Frame Group
- District Junctor Frame
- District Link Frame

Subscriber Sender Link

Office Link Frame
Office Extension Frame
Subscriber Sender Frame
Originating Marker Connector Frame
Originating Marker Frame

Terminating Equipment

Incoming Frame Group
- Incoming Trunk Frame
- Incoming Link Frame
- Incoming Link Extension Frame
- Terminating Sender link Frame

Terminating Sender Frame
Terminating Marker Connector Frame
Terminating Marker Frame
Number Group Connector Frame
Block Relay Frame
Line Distributing Frame
Line Choice Connector Frame
Line Junctor Connector Frame
Line Link Frame

Two distributing frames are also provided. The Main Distributing Frame (MDF) is used for cross-connecting the subscriber and trunk cable pairs to the crossbar frames. The Line Distributing Frame (LDF), provides a means of cross-connecting the line link frames to the terminating marker. This permits any directory number (vertical side LDF) to be assigned to any "line" circuit (Col. -Sw.-Vert. horizontal side LDF) as shown in Figure 7-2.

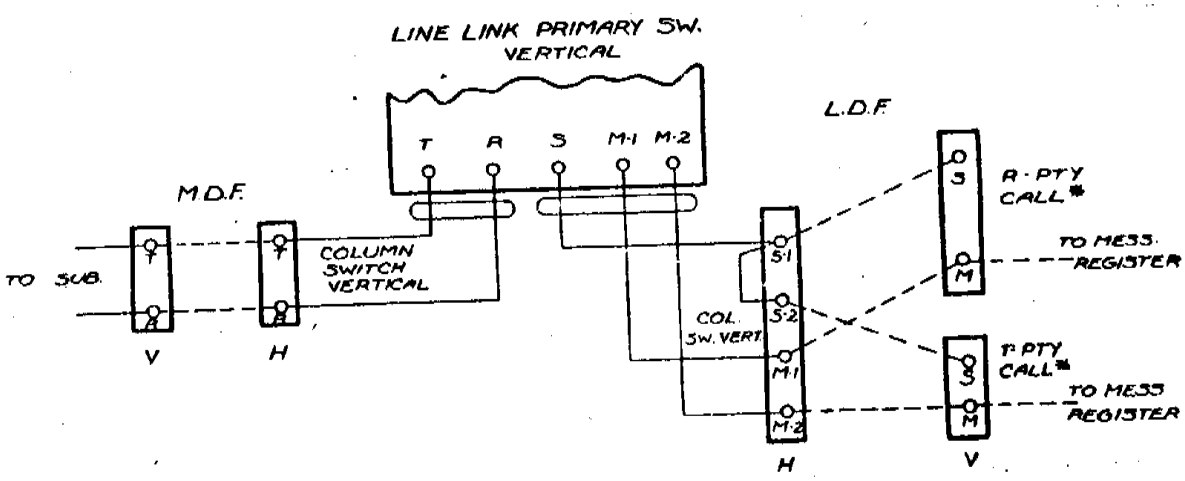

Figure 7-2 Distributing Frame Connections for No. 1 Crossbar Line Link Frames

TCI Library: www.telephonecollectors.info

The equipment required to complete a call and the path of a call through the No. 1 Crossbar System equipment frames is shown in Figure 7-3.

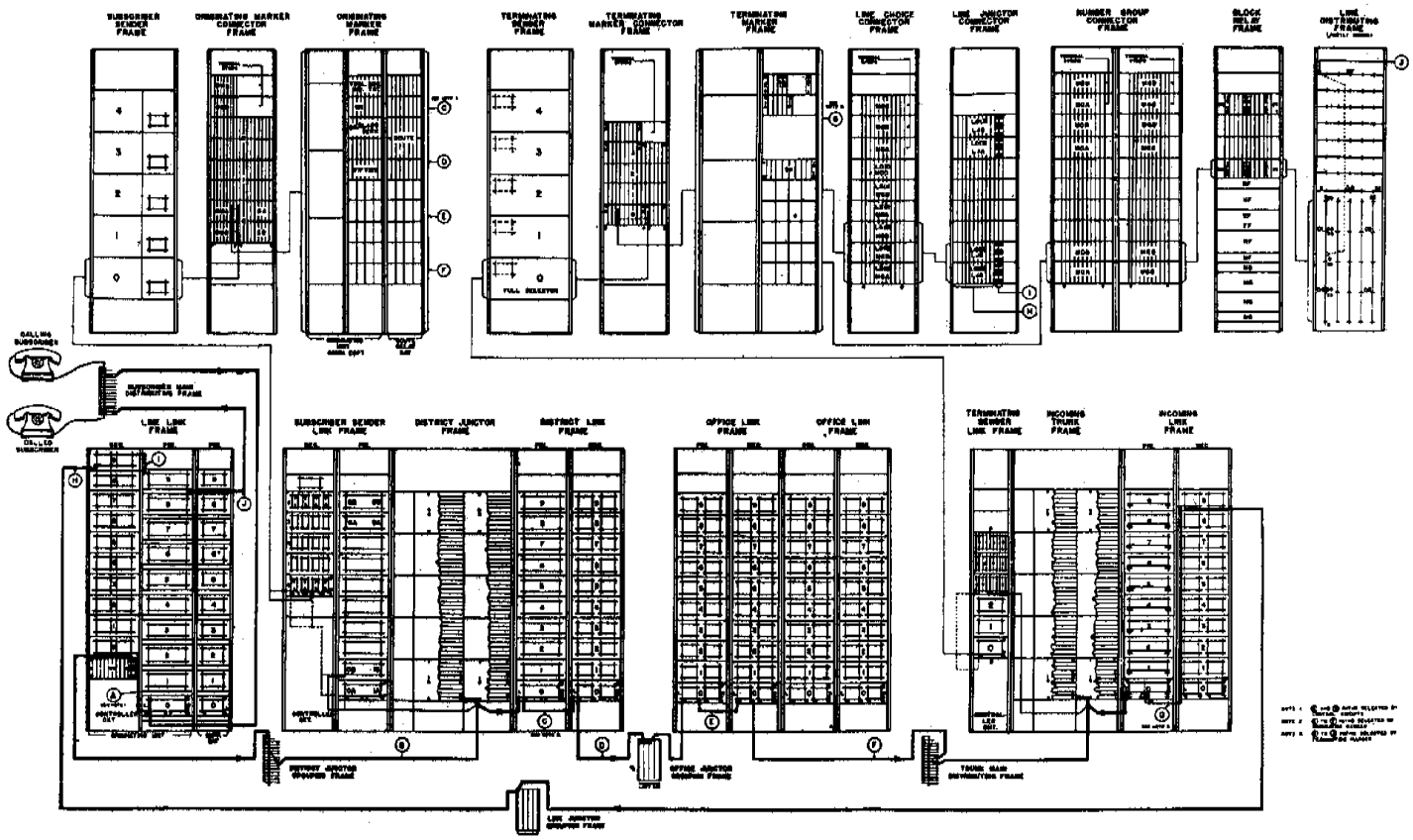

Figure 7-3 Major No. 1 Crossbar Frames

B. FRAME EQUIPMENT

1. Line Link

The line link frame is used for both originating and terminating calls. It connects the customers lines, which are assigned to verticals of the

TCI Library: www.telephonecollectors.info

primary switches, with district junctors for outgoing calls and with line junctors for incoming calls. The assignment of lines to the line junctors for incoming calls. The assignment of lines to the line link frame is governed by load characteristics, calculated by the CCS per line for both in and out calls. CCS is an abbreviation for "Hundred Call-Second Per Hour" measurement of line load indicating the sum of the length of the time for each call on the line is one hour.

The crossbar customer's line is assigned to, and has exclusive use of a vertical of a primary crossbar switch. The primary switch has ten horizontal paths with which this vertical may connect. The ten paths handle all the traffic, both outward and inward for all the lines on a single switch. The first vertical on the first ten primary switches on each line link frame is used to obtain access to busy lines for test and verification purposes. These ten primary switches, plus the ten secondary switches are called the "basic unit." Since the traffic load for nineteen lines does not normally load the ten horizontal paths, or line links efficiently, additional switches for additional lines are added laterally to form what is known as a horizontal group shown in Figure 7-4.

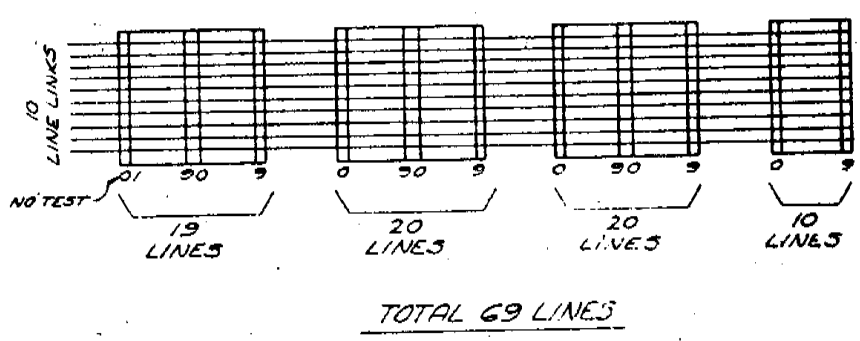

Figure 7-4 Maximum Horizontal Group

TCI Library: www.telephonecollectors.info

On service orders each line assignment will carry a location number for the line on the line link frame just as it does in the manual office (panel and jack), in the panel office (line group and terminal), and in the crossbar unit (column, switch, and vertical). For example, 0152 means column 01, switch 5 and vertical 2, illustrated in Figure 7-5.

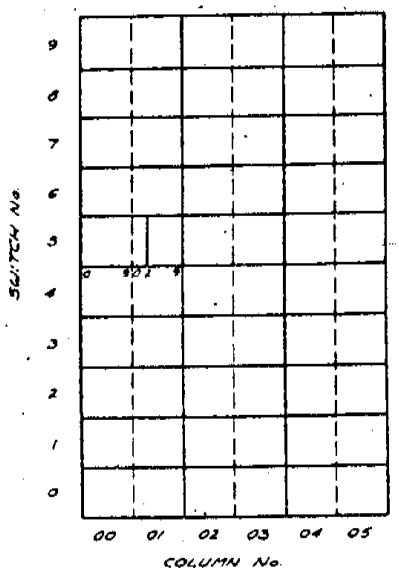

Figure 7-5 Service Order Number 0152.

Each line link frame has associated with it a "control circuit" whose function it is to recognize a calling line, choose an idle line link and assist in the selection of an idle district junctor and to operate the necessary selecting and holding magnets for connecting these paths together. On a terminating call it assists in setting up the call from the incoming trunk over a line junctor and line link to the called line.

Since a line link controller circuit may provide service to as many as 690 subscriber's lines, it is of the utmost importance that there is always a controller circuit available. As a service precaution, line link frames are arranged in pairs insofar as their controllers are concerned.

TCI Library: www.telephonecollectors.info

This arrangement is called a "home" and "mate" controller circuit operation. If a call is delayed in the "home" controller circuit, it will be transferred automatically to the "mate" controller circuit and handled on an "emergency" basis.

2. District Junctor

The district junctor frame is mounted in the center of the "District Frame Group," the subscriber sender link is on the left and the district link frame is on the right. The district junctor frame is used to mount the relay equipment which provides talking battery and supervision for the calling subscriber and controls the operation of the subscriber message register on calls dialed directly by the subscriber. Each frame will care for the 100 district junctors of the associated district link frame. The subscriber sender link frame provides access to office junctors. The district junctors are multipled to 2, 3, 4, 5, 6, or 7 line link frames as indicated by the traffic requirements. A diagram of connections to a district junctor is shown in Figure 7-6.

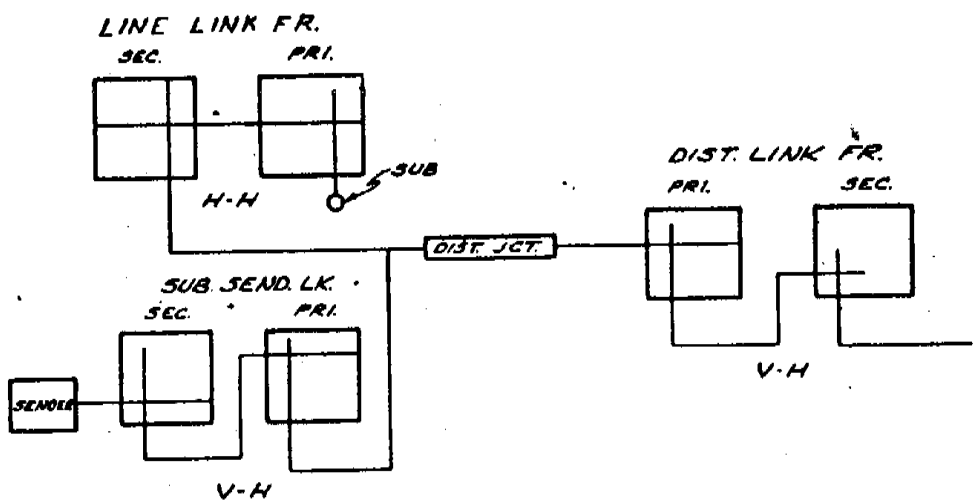

Figure 7-6 Connections Provided by a District Junctor.

TCI Library: www.telephonecollectors.info

The coin district junctors, in conjunction with a coin control circuit, collect or refund coins depending on whether or not the called party answers. Noncoin district junctor circuits can be arranged in conjunction with zone registration equipment to make additional charges for calls outside of the local charge zone or area.

3. District Link Frame

The district link frame also uses the primary - secondary arrangement of crossbar switches, each frame being equipped with ten 200 point primary switches and ten 200 point secondary switches.

The district junctors, which originate at the line link frames, terminate on the horizontals of the district link primary switches, ten junctors per switch. Further, the horizontals of the primary switches are continuous across each switch. Those on the secondary switches are cut (split) between the 10th and 11th verticals.

In addition to the primary and secondary switches, the district link frame is equipped with multicontact relays. The relays, located at the top of the district frame, are used by the originating marker to gain access to the links and junctors of the district link frames.

4. Subscriber Sender Link Frame

The subscriber senders are selected for each call by the subscriber sender link frame. This frame consists of primary and secondary switches whose function it is to connect an idle subscriber sender to the particular district junctor which has been selected for a given call. Since this frame must function before the subscriber begins to dial, and before the originating marker is connected, it is provided with a control circuit. The control circuit assists the line link control circuit in selecting the district junctor to be used on each outgoing call. It also determines which senders are available for use for each particular call.

An emergency control circuit is provided for use with any subscriber sender link frame. It can be connected to any one of the subscriber

TCI Library: www.telephonecollectors.info

sender link frames by means of manually operated switches located directly above each regular controller cabinet.

Each subscriber sender link frame can handle a maximum of 100 district junctors and 10 sub-groups (10 senders each) or 100 originating senders.

5. Office Link Frame

Each office frame consists of a unit or bay of ten primary switches and ten secondary switches. All the switches are of the 200 point type.

Two hundred office junctors, originating on the secondary switch verticals of the district link frames, terminate on the vertical units of the office link frame primary switches. The two hundred links (left and right) originate on the office link frame primary switch horizontals and terminate on the secondary switch vertical units.

This arrangement makes it possible for any district junctor to obtain connection to as many as 4000 trunk locations (20 office frames with extensions times 200 trunks).

The outgoing trunks, which appear on the horizontals of the office link frame secondary switches are cabled to the main distributing frame. Here they can be cross-connected by jumpers to a local or underground trunk cable, to reach the various exchange areas.

Office frames are always used in pairs, and it is required that trunks to a given exchange be assigned to a pair of office link frames. This insures, that if a trouble condition occurs on one of the frames of the pair, a call to a given central office will be completed over a trunk available on the second office link frame.

6. Office Extension Frames

When the number of office frames exceeds ten and it is desirable to operate more than 200 trunks per pair of frames, extension frames must be provided. Extension frames consist of an

TCI Library: www.telephonecollectors.info

additional group or bay of ten 200 point switches which are installed adjacent to the regular secondary switches of each office frame. The office link circuits are multipled giving each trunk location access to all the links.

7. Subscriber Sender

Each subscriber sender frame mounts five senders. The ten senders of two adjacent frames normally make up a subscriber sender group.

The subscriber senders of the crossbar system are similar to and perform much the same functions as those of the panel system, except that they do not control the setting up of the paths between the calling line and the outgoing trunk. On calls to panel and crossbar offices control of the incoming and final selections in the distant office will be on a revertive pulsing basis. In the case of a crossbar distant office, selections will require the use of full selector terminating senders. In panel distant offices the control remains with the originating sender for the entire operation. Calls to manual offices are handled on a call indicator or call announcer basis in the same manner as formerly handled by panel subscriber senders.

8. Originating Marker Connector

Each originating marker connector frame will accommodate three connectors which connect subscriber and keypulsing senders to origination markers.

Each connector circuit will serve a maximum of ten subscriber senders, or a maximum of eight subscriber and keypulsing senders combined. These may be connected to a minimum of two or a maximum of eight markers.

9. Originating Marker

The originating marker circuit receives information from the originating sender which it decodes and then returns information to the sender for controlling selections at the terminating end. The marker also selects a trunk

TCI Library: www.telephonecollectors.info

to the desired office and establishes a path from the district junctor to the selected trunk as well as transmitting talking selection, charge or noncharge, and party information to the district junctor.

The originating markers are arranged for a maximum of 24 subscriber classes and one operator class of service per marker group. A maximum of eight markers per group may be provided. A group of markers may be associated with a maximum of 20 district frames.

The number of markers required for traffic is based on the originating office busy hour calls plus the keypulsing calls.

A few features and limitations of the originating markers follows:

a. The marker has a capacity for 802 possible codes including zero and permanent signal.

b. The maximum capacity of the originating marker when trunk groups are subdivided is as follows:

   30 trunk groups with 2 first choice subgroups - 1 route relay.

   3 trunk groups with 3 first choice subgroups - 2 route relays with common subgroups.

   3 trunk groups with 4 first choice subgroups - 2 route relays with common subgroups.

   3 trunk groups with 2, 3, 4, 6 or 12 first choice subgroups - 2 route relays.

   All trunk groups may or may not have a common subgroup in addition to above.

c. Each marker is equipped with a route relay bay arranged for 100 route relays (50 multi-contact relays). Supplementary bays may be added each of which will care for 100 additional route relays.

TCI Library: www.telephonecollectors.info

10. Incoming Frame Group

The first frames encountered in handling incoming calls are known as the incoming frame group. Similar to the district frame group, they employ three frames: a terminating sender link frame which is always installed to the left of an incoming trunk frame, and an incoming link frame which is mounted to the right of the incoming trunk frames.

11. Incoming Trunk Frame

The incoming trunk frame provides a location for the relay equipment associated with the incoming trunk circuit. Its functions are to ring the called party's bell, to recognize removal of receiver from switchhook by the called party, to furnish talking battery, and to maintain called party supervision during conversation. In addition, it returns overflow or line busy indications to the calling subscriber in case the call cannot be completed.

Each incoming trunk frame can handle 100 trunks, (5 groups of 20) of the full selector type. Larger size trunks (more relays per circuit) will occupy more space on the frame so these extra circuits are placed on the supplementary frame.

12. Incoming Link

The incoming link frame differs from the district link frame in that it is provided with a different type of primary switch equipped to connect 16 trunks instead of the usual 10.

As ten primary switches are provided, each incoming link frame can therefore connect to 160 incoming trunks. Since each incoming trunk frame can mount a maximum of only 100 trunks, the extra 60 trunks are located on an additional incoming trunk frame. This frame is known as an auxiliary incoming trunk frame, and mounts a maximum of 100 incoming trunk circuits, which will connect through the primary switches of several incoming link frames.

TCI Library: www.telephonecollectors.info

Each primary switch has twenty, ten left and ten right links, going to the secondary switches in a vertical to horizontal spread arrangement.

Multicontact relays located above the switches on the incoming link frame assist the terminating marker in the selection of the crosspoints on the primary and secondary switches of the incoming link frame.

13. Terminating Sender Link

The terminating sender link frame connects an idle terminating sender, of the proper type to an incoming trunk for the handling of an incoming call.

The terminating sender link frame is arranged to mount three 100 point 6 wire primary and three 100 point 6-wire secondary crossbar switches together with the associated control equipment.

The control circuits of a pair of link frames are arranged to work on a mate frame basis to care for emergencies.

14. Terminating Sender

The terminating sender receives information from the originating subscriber sender, from keypulse sender or from dialing trunks. This information is converted by the sender into the called number and passed to the terminating marker.

The terminating sender frame is arranged to mount five senders. The top three positions (2, 3 and 4) will mount full selector senders only while the bottom two positions (0 and 1) will mount either full selector or "B" senders.

15. Terminating Marker Connector

The terminating marker connector selects an idle terminating marker and connects the sender to the marker.

TCI Library: www.telephonecollectors.info

Each connector frame will care for four marker connector circuits, associated control and alarm relay equipment common to these circuits, together with a location at the top of the frame for a maximum of two "B" position finder units, required when the office unit is served by a local "B" switchboard.

One connector circuit will consist of from 7 to 15 multicontact relays. The number varies with the number of terminating markers and the number of senders associated with connector.

16. Terminating Marker

The terminating marker frame is used to register the called number it receives from the terminating sender and from the translation of that number, locate and test the called line, and control the selection and closure of a path from the incoming trunk through the incoming link and line frames to the called line.

The number of terminating markers provided in an office will vary from two to ten, depending on the total number of terminating busy hour calls the markers will be required to handle.

When a marker is seized by a sender, it must determine, from the number that has been dialed, the correct number group connector to operate, and also the correct 100 block and 20 block relays to operate in the number group. This process is known as decoding, because the decimal directory number received, must be translated in terms designating a number group, a 500 group relay, a 100 block relay, and a 20 block relay. The marker can be arranged to test twenty lines at one time.

17. Number Group Connector Circuit

The 10,000 numbers in a given office are divided into "number groups." A number group consists of a series of numbers into which all the terminating markers have access, but only one at a time. The size of a number group depends upon the amount of terminating traffic

TCI Library: www.telephonecollectors.info

delivered to the numbers. Number groups will never be smaller than 100 numbers and are furnished in increments of 100 numbers up to a maximum of 2500 numbers.

The terminating marker obtains access to a particular number group through a number group connector circuit composed of equipment on a number group connector frame and block relay frame.

It is impractical to build a marker that is able to recognize ten thousand individual indications, and it is, therefore, arranged so that in conjunction with the number group connector and block relay frames it may locate and test the lines in blocks of twenty numbers each, selecting a block of twenty and ultimately the particular one of that block of twenty corresponding to the called number.

The possible 10,000 subscriber numbers of the office are arranged in blocks of twenty, and a 20 block relay (TB) is provided for each sub-group. There may be as many as 500 of these 20 block relays in an office, and, to simplify the selection of the desired one they are grouped into sets of five and operated through a 100 block relay (HB) also located on the block relay frame. Several of the 100 block relays are formed into a "number group" and by means of a number group connector can be temporarily connected to any one of the terminating markers.

18. Block Relays

The block relay frame, besides mounting the hundred and twenty block relays associated with 800 lines, is equipped with cross-connecting fields for passing additional line information to the marker.

One field, the "NF," is used to cross-connect the subscribers number to the line choice using one of the following punchings: (a) RF punching if the line is ring party, individual line, or the last line of a PBX hunting group (b) TF punchings if the line is a tip party of a party line; (C) HF punching if it is the first or an

TCI Library: www.telephonecollectors.info

intermediate line of a PBX group; (d) JF punching to indicate "jump hunting;" (e) ANF punching for line overflow registrations.

The other cross-connecting field (NC) associated with each number is used for (a) quarter choice location and (b) horizontal group location for the called number.

Another cross-connection which is not associated with the block relay frame is required to give the marker complete information regarding the subscriber line. This is the NS lead which is run on the LDF. It cross-connects the subscriber's number to the column - Switch - Vertical.

19. Direct Distance Dial Service

In addition to certain modifications required in existing subscriber senders and originating markers, two new equipment elements are required for providing DDD facilities in No. 1 Crossbar offices. These are the auxiliary sender and the auxiliary sender link.

20. Auxiliary Sender

The auxiliary sender is a wire-spring relay unit and performs the following basic functions:

(a) Registers two dialed digits, thus supplementing the 8-digit capacity of the subscriber sender to enable the customer to dial 10-digit foreign area calls.

(b) Makes trunk test toward the distant office when dialing is completed, and when the remote incoming sender is attached, gives the subscriber sender an indication that it is ready to receive the digits registered in the subscriber sender.

(c) Receives the digit stored in the subscriber sender on a PCI basis in the order dialed and outpulses each digit, after it is received, on an MF basis to the distant office.

TCI Library: www.telephonecollectors.info

(d) Notifies the subscriber sender when outpulsing is completed so that both senders may release.

21. Auxiliary Sender Link

The auxiliary sender link provides the connecting path between any one of a maximum of 100 subscriber senders and their associated auxiliary senders. This frame may be partially equipped in individual units, each with capacity for ten subscriber senders and, when fully equipped, consists of ten auxiliary sender link units. An auxiliary sender link unit is made up of of 200-point, 6-wire crossbar switch with associated relays.

22. Subscriber Senders

Certain modifications have been made to existing subscriber senders in order to function properly with the auxiliary sender and auxiliary sender link.

Relays have been added to these senders to enable them to perform the following functions:

(a) Recognize calls which require an auxiliary sender either through the "0" or "1" in the second digit of the foreign numbering plan area code for 10-digit calls or on instructions from the originating marker for 7- or 8-digit calls.

(b) Passes on to the auxiliary sender, on instructions from the originating marker, the number of digits to be deleted, if any.

(c) Routes to overflow any 10-digit call for which an auxiliary sender is not connected in time to register the first pulse of the ninth digit.

(d) PCI pulse its eight digits in the order dialed into the auxiliary sender instead of sending the stations digit ahead of the thousands, as is presently done when eight digits are outpulsed PCI.

TCI Library: www.telephonecollectors.info

23. Originating Markers

The originating markers have been modified to inform the subscriber sender when an auxiliary sender is required on 7-digit calls. Also, the markers will pass to the auxiliary sender via the subscriber sender, the number of digits to be deleted.

SWITCHING A CALL THROUGH THE NO. 1 CROSSBAR SYSTEM

When a subscriber lifts the receiver, a line relay, associated with the line link frame primary switch vertical to which the line is connected, operates. The operation of the line relay notifies the line link controller that a call is being originated. The controller identifies the calling line by determining the horizontal group, vertical column, and vertical file in which the line is located. The progress of the call can be readily traced by following the heavy connecting lines shown in Figure 7-7.

The Line Link controller also connects itself to one of several sender link controllers with which the line link frame is associated. The two controllers function together to select an idle district junctor. The selection is made from one of the groups of ten district junctors which has an idle line link back to the calling line and an idle sender link to a sender sub-group which has an idle sender. District junctor groups having at least two idle junctors are preferred.

Coincident with the selection of a district junctor, the sender link controller is selecting an idle sender. This selection is made from subgroups having an idle sender link to the selected district junctors. Preference is given to those subgroups having two or more idle senders.

Following these selections, crosspoints are closed on the line link frame primary and secondary switches connecting the customer's line to a district junctor, and at the same time crosspoints are closed on the sender link primary and secondary switches to connect the

TCI Library: www.telephonecollectors.info

district junctor to a sender. Over these paths the tip and ring of the customer's line are now connected to a subscriber's sender. The sender sends out dial tone, indicating that it is ready to receive dial pulses. Approximately 0.6 second is required to complete this connection.

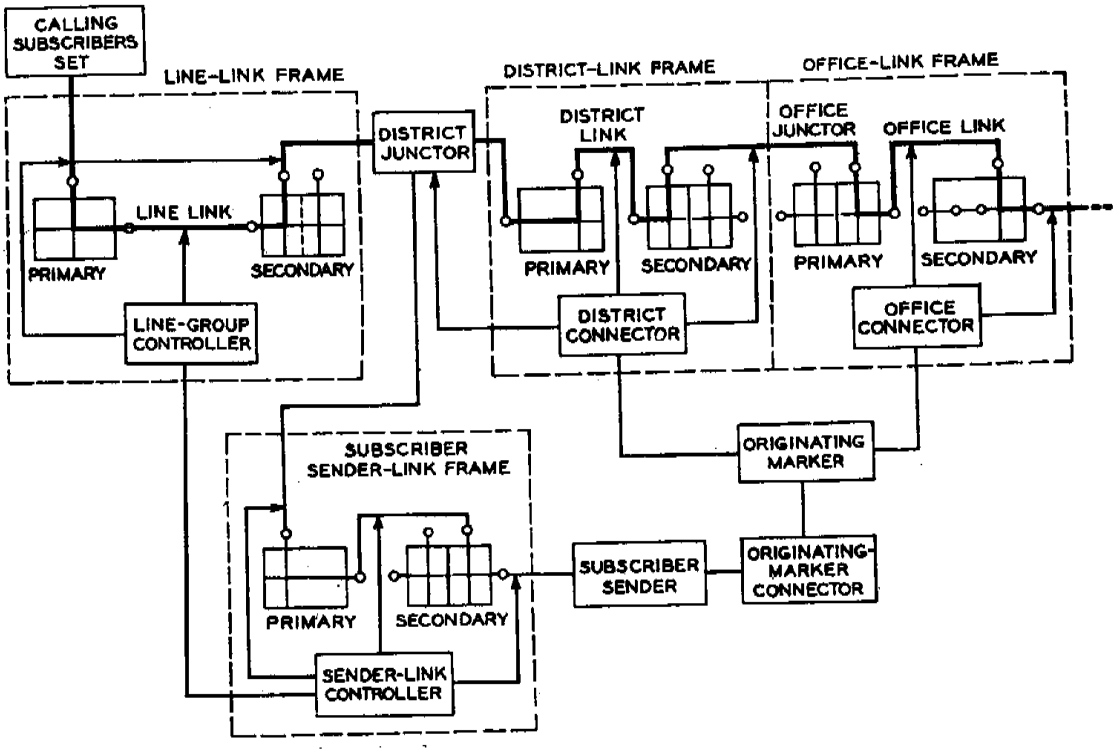

Figure 7-7 Originating Call in a No. 1 Crossbar Office

The sender also registers the number of the link frame involved, receiving this information from the sender controller.

The subscriber now dials the office code and directory number of the called subscriber. The sender counts the dial pulses and registers all digits dialed on the register switch.

TCI Library: www.telephonecollectors.info

As soon as the office code is registered, the sender signals the originating marker connector which connects the sender to an idle originating marker cutting through a large number of leads over which the sender and marker exchange information.

The marker receives from the sender the district frame number and the office code dialed. It decodes this information and sends back to the sender the information it needs to complete its part in handling the call.

From the route relay assigned to the office code the marker determines the pair of office frames on which the trunks to the desired office are located. The route relay also provides information as to the trunk level and the start and stop test points within that level. Through connector relays at the office frame, the marker gains access to the specified trunk locations, tests and selects an idle trunk.

The marker gains access to the office links that serve the selected trunk through connector relays at the office link frame. It also obtains access to the district link that serves the district junctor and office junctors leading to the office frame on which the selected trunk is located. Access to both the office links and office junctors is obtained through the district frame connector relays. From this combination of links and junctors the marker selects an idle district link which has access to an idle office junctor which in turn has access to an idle office link which appears before the selected trunk.

The marker now operates the select and hold magnets on the district and office link frames necessary to complete this channel from the district junctor to the selected trunk. This also provides a path from the subscriber sender to the trunk since the sender was cut through to the district junctor. The marker now has completed its functions and releases. The marker completes its function in approximately 0.5 second.

TCI Library: www.telephonecollectors.info

This outgoing trunk is connected to an incoming trunk in the terminating office shown in Figure 7-8.

The incoming trunk when signaled by the subscriber sender, will cause the terminating sender link controller to select an idle terminating sender and to connect it to the incoming trunk.

The two senders are now connected. The called number is transferred from the subscriber sender to the terminating sender where it is recorded on a register switch. With this information transferred the originating sender has completed its functions and releases.

The terminating sender now signals the terminating marker connector which connects an idle terminating marker to the sender cutting through the leads over which information is passed. The marker receives the called number and the incoming frame number from the sender.

The terminating marker translates this number as being in a block of 100 numbers and finally as being in one of five blocks of twenty lines in the selected block of 100 numbers. By means of cross-connections, the marker will then operate its number group connector relays in the proper number group, the proper hundreds block relay and through it the twenty block relay associated with twenty consecutively numbered lines, one of which is the called number.

The twenty block relay operates and cuts through to the marker a number of control leads which give the necessary information regarding the line and its location. The marker then tests the called line to determine whether it is busy or idle. If busy, the marker will set the incoming trunk so that the calling subscriber will receive busy tone. (The marker will then release immediately.)

If idle, the marker will determine from cross-connections on the block relay frame whether it is an individual or PBX line, whether tip or ring party ringing is required, in which line

TCI Library: www.telephonecollectors.info

choice, on which one of the four line link frames of the choice and in which horizontal group of the line link frame the called line is located.

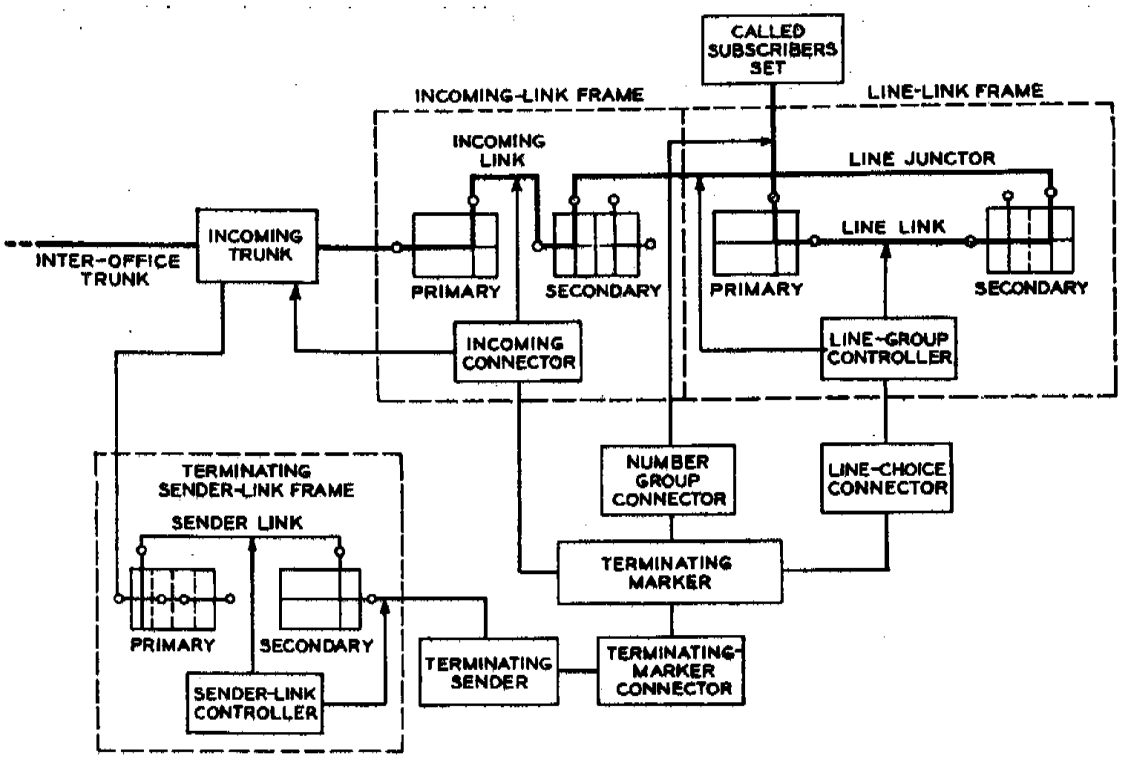

Figure 7-8 Terminating Call in a No. 1 Crossbar Office

From the line location information, the marker, by way of a line choice connector and line junctor connector, is able to test the line links that serve the horizontal group in which the called line is located. Knowing the incoming link frame to which it must connect, the marker tests the line junctors between this frame and the line link frame. At the incoming link frame, connector relays give the marker access to the links available to serve the incoming trunk. From this combination of links and junctors, the marker selects an idle incoming link with access to an idle line

TCI Library: www.telephonecollectors.info

junctor which in turn has access to a line link serving the horizontal group in which the called line is located. The marker will then operate the primary and secondary select and hold magnets on the line link and incoming link frames necessary to close this path between the incoming trunks and the called subscriber.

The marker also sets the incoming trunk to apply proper ringing to the called line. The marker and terminating sender now release. This marker has completed its function in about 0.5 second.

The incoming trunk applies ringing current to the called line and, when the called party answers stops the ringing and signals the district junctor that the called party has answered, so that the correct charge may be made. The calling subscriber may now talk to the called subscriber, the district junctor applying talking battery to the calling subscriber, and the incoming trunk to the called subscriber. At the end of the conversation, the two parties will hang up, and all circuits will release.

A DIRECT DISTANCE DIALING (DDD) CALL SWITCHED THROUGH THE NO. 1 CROSSBAR SYSTEM

It is the function of the auxiliary sender to receive the 10-digit DDD calls or the 7- or 8-digit home area calls. Figure 7-9 illustrates the function of the auxiliary sender.

24. Ten-digit Call

A customer originating a call to a foreign area is connected to a subscriber sender in the usual manner and first dials the X 0/1 X foreign area code followed by the 7-digit directory number. The subscriber sender recognizes the "0" or "1" in the second digit as an indication that an auxiliary sender may be required to aid in the completion of the call. (Service codes in the X-1-1 series indicate only 3-digit calls which do not require use of the auxiliary sender.) After the third digit is dialed, the subscriber sender calls for an originating marker as at present. When one is connected, it

TCI Library: www.telephonecollectors.info

decodes the foreign area code in the same manner as a local office ABX code, completes a path to the outgoing CAMA tandem trunk, transmits to the subscriber sender the usual selection information, and releases.

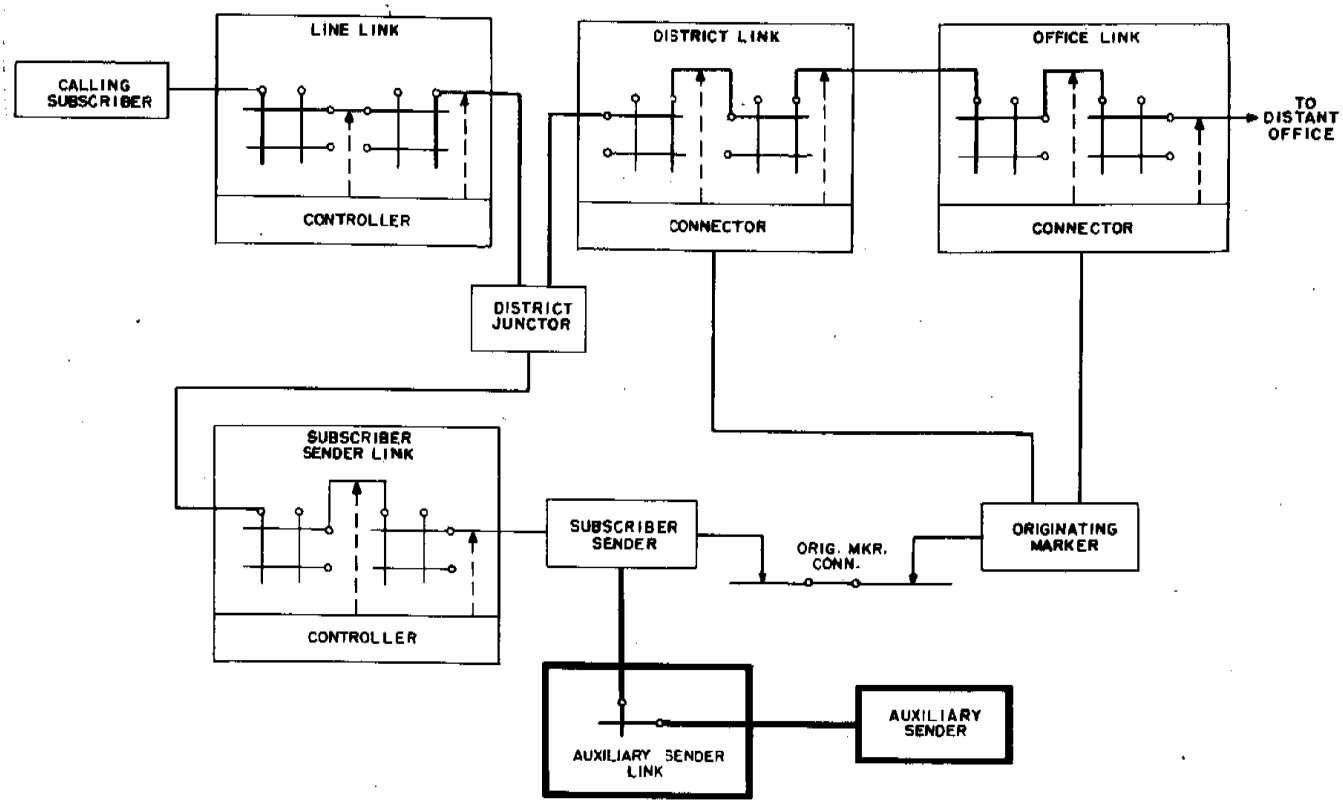

Figure 7-9 Diagram of Auxiliary Sender of the No. 1 Crossbar System.

Meanwhile, the subscriber sender continues to receive dialed digits and when the seventh digit is registered, it makes a bid for an auxiliary sender through the auxiliary sender link frame. Before the first pulse of the ninth digit, a connection is made to an auxiliary sender for registration of the ninth and tenth digits as they are dialed. If, for any reason, an auxiliary is not connected in time, the subscriber sender sends the call to overflow.

TCI Library: www.telephonecollectors.info

The auxiliary sender signals the subscriber sender when dialing is completed. The subscriber sender reacts by making PCI trunk test toward the auxiliary sender. The auxiliary sender then signals for a distant office sender via the subscriber sender, and when one is connected, gives the assignment signal to the subscriber sender. The eight digits in the subscriber sender are then PCI pulsed, in the order dialed, into the auxiliary sender. These digits are received in the auxiliary sender on either one of two dual function register circuits which are capable of receiving PCI digits and controlling the outpulsing of MF digits to the distant office. While one register circuit is receiving a PCI digit, the other register is controlling the MF outpulsing of the preceding digit and preparing to receive the next PCI digit. Since the MF outpulsing overlaps with the PCI inpulsing, this is referred to as the "overlap" method of operation. Therefore, the eight digits in the subscriber sender are MF outpulsed at the PCI rate. The two digits registered in the auxiliary sender are outpulsed at the regular MF rate.

After the eight digits in the subscriber sender and the ninth and tenth digits in the auxiliary are MF outpulsed, the auxiliary signals the subscriber sender that outpulsing is completed and both circuits release.

25. Seven-digit Call

The auxiliary sender may also be used to MF outpulse 7- or 8-digit calls. The only difference in handling this type of call compared with a 10-digit call is that the indication that an auxiliary sender is to be used comes from the originating marker rather than from the second dialed digit. Once the auxiliary sender is connected and a distant incoming sender is attached, outpulsing proceeds as described above.

26. Digit Deletion

There is a feature in the auxiliary sender which permits it to delete the first two (skip 2) or three (skip 3) digits received from the subscriber

TCI Library: www.telephonecollectors.info

sender. On 7-digit calls, this feature enables the use of MF pulsing over direct trunks to No. 1 or No. 5 Crossbar offices which are equipped with MF receivers and are within the charging range of the originating office. For 10-digit traffic, the skip 3 feature may be used to delete the area code on calls going into an adjacent area through a "directional" CAMA crossbar tandem office used only for calls to that particular area.

7.2 CROSSBAR TANDEM SWITCHING SYSTEM

A. GENERAL

Crossbar tandem is a relatively young switching system. It first went into service in 1941. Crossbar tandem equipment is used primarily in panel, step-by-step, and crossbar areas to switch calls among offices by means of crossbar switches in a marker common control system. Its central location provides for the application of Automatic Message Accounting (AMA) to record billing data for local and toll calls. It permits the use of AMA on calls from panel offices for which local AMA has not been developed. It provides for the application of Traffic Service Positions to the tandem office to extend customer Direct Distant Dialing (DDD) to include customer dialing of special toll calls, Coin Distance Dialing (Coin DD), and local and toll dial assistance originated as Dial Zero Calls. With proper terminating equipment it also provides for switching intertoll trunks on a 2-wire basis.

The basic need for a local tandem switching system arises in large metropolitan areas where local telephone service is furnished by many central offices as illustrated in Figure 7-10. In such areas tandem systems are used:

a. To effect trunking economies by combining small amounts of interoffice traffic originating in the various central offices and routing this combined traffic over a common trunk group to the required destination, thus eliminating the necessity for inefficient, small, direct inter-office trunk groups.

b. To effect central office economies by serving as a machine language interpreter" between the different types of central offices, thereby eliminating the costly necessity of equipping

TCI Library: www.telephonecollectors.info

every central office for direct communication with every other type of central office as illustrated in Figure 7-11.

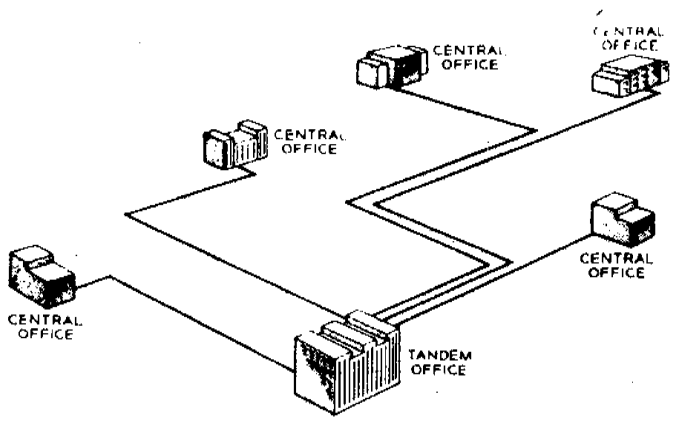

Figure 7-10 Local Tandem Switching

c. To effect overall service economies by centralizing equipment for rendering 1-way message service (weather reports, etc.) and equipment needed as normal adjuncts of telephone service (charging equipment, etc.). Centralization results in efficient use of such equipment as compared with furnishing the same at each local central office requiring it.

B. THE SYSTEM

The crossbar tandem is a 2-wire switching system, that is, it switches only one pair of voice transmission wires over which conversation flows in both directions. The crossbar tandem system functions in many respects like a No. 1 Crossbar office. The basic arrangement is shown in the upper portion of Figure 7-12. The lower portion of Figure 7-12 shows equipment elements required when AMA operation is provided for a crossbar tandem system. An incoming trunk is connected through a trunk link frame, office junctor grouping frame, office link frame and an outgoing trunk to another office. In operation, the incoming trunk is connected to a sender through a sender link frame. The sender registers the called number and other information required and connects to a marker

TCI Library: www.telephonecollectors.info

through a marker connector frame. The marker receives information from the sender and supplies the sender with information it needs to complete the call. The marker selects an outgoing trunk to the desired destination and connects the incoming trunk through the trunk and office link frames to the outgoing trunk.

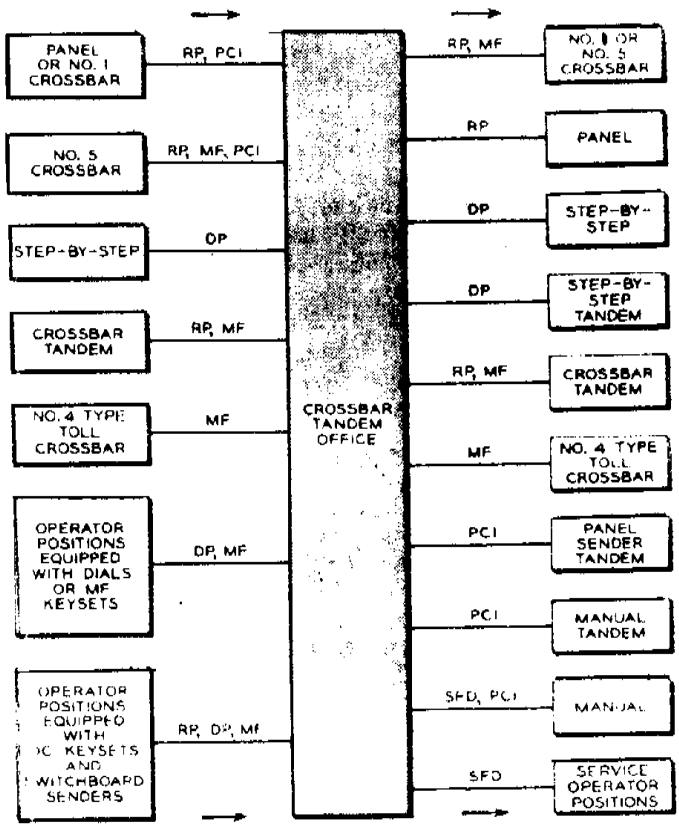

Figure 7-11 Block Diagram of Sources and Destinations of Traffic Routed through Crossbar Tandem Systems.

In the simplified block diagram of Figure 7-13 the switching network of the system consists of crossbar link frames. Incoming trunks from the calling central offices appear on trunk link frames and outgoing trunks to the called central offices appear on office link frames. Through a system of links and junctors, which interconnect the crossbar switches on these frames, any incoming trunk can be connected to any outgoing trunk. For each connec-

TCI Library: www.telephonecollectors.info

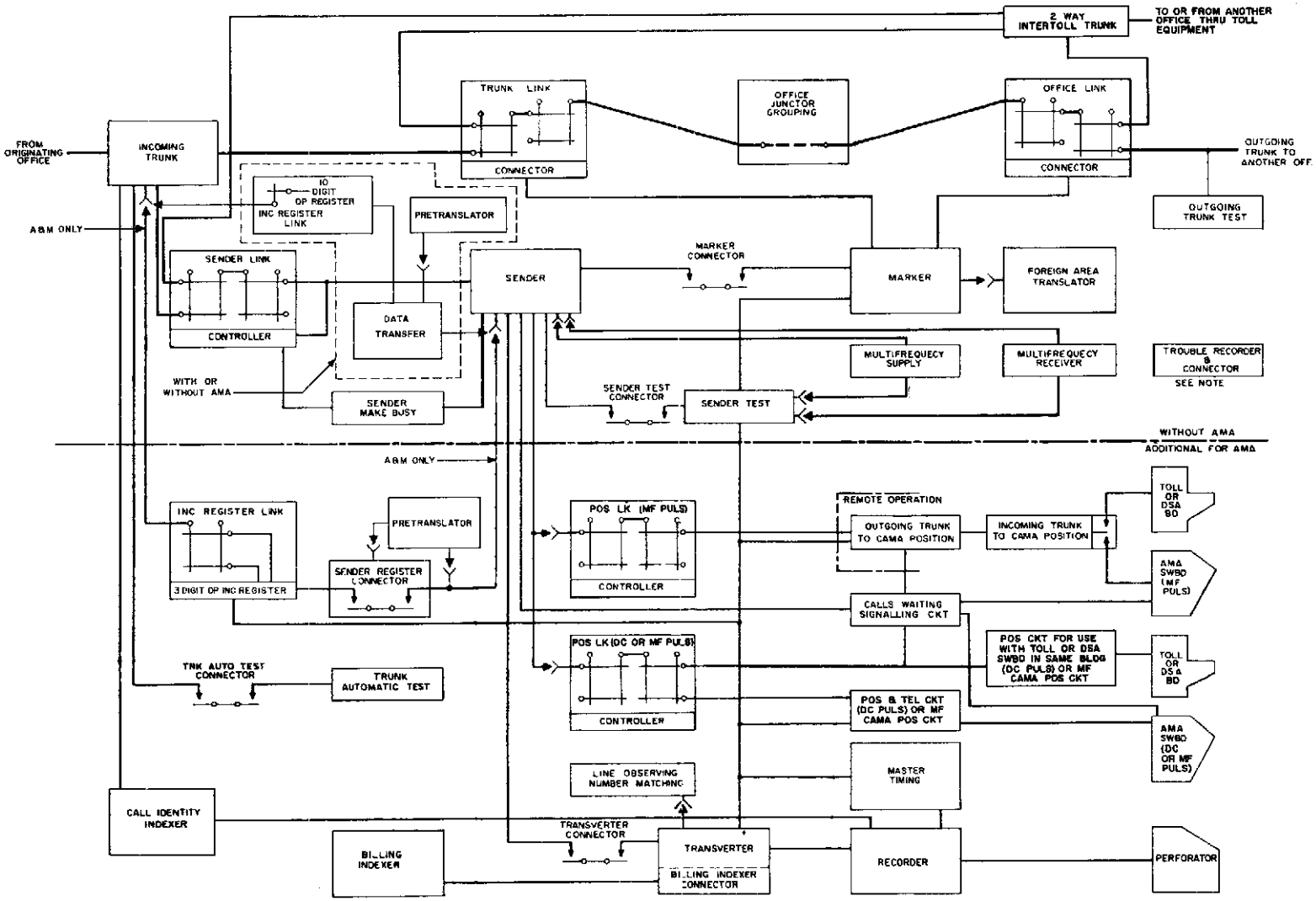

Figure 7-12 Block Diagram With and Without AMA

TCI Library: www.telephonecollectors.info

tion there are several possible paths (or channels) through these frames and, on a call, one of these paths is selected by the common control equipment: senders, markers, connectors, etc.

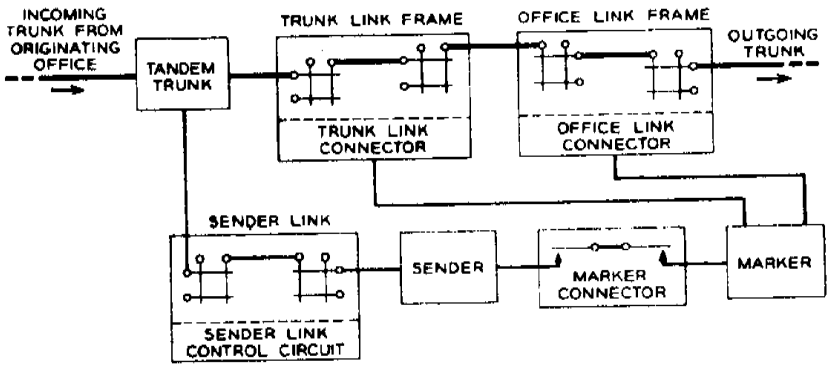

Figure 7-13 Simplified block diagram of crossbar tandem

To establish a path, the incoming trunk calls for the services of the common control equipment. This equipment consists of a samll number of elements (senders, markers, etc.), each of which is called into service for a relatively short time, performs its functions, releases, and is free to serve another call. The basic functions of these common control elements are:

1. Store the digits as they are received (sender function).

2. Translate these digits into switching control information (marker function).

3. Test for and select an idle outgoing trunk (marker function).

4. Test for and select a matching set of connecting links between the incoming trunk and the outgoing trunk (marker function).

TCI Library: www.telephonecollectors.info

5. Outpulse as required (sender function).

Over the years, this original switching plan of the crossbar tandem has proved to be highly satisfactory for meeting the first fundamental tandem system objective of enabling trunking economies to be effected in large metropolitan areas. Its switching speed, traffic capacity, and trunking flexibility are all adequate, since its control circuits are fast, and it can accommodate a maximum of about 3,000 incoming trunks and 4,000 outgoing trunks assignable in a wide range of group sizes.

1. Frames and Framework

Since it is not practical in this text to illustrate each type of switching frame used in crossbar tandem, nevertheless a few illustrations are provided to aid in visualizing how circuit elements such as relays, resistors, inductors, capacitors, electron tubes, etc. are first mounted in position on precisely drilled mounting bars which in turn are assembled in various units and finally are mounted on metal frame uprights. In crossbar tandem, frames measure 11 feet 6 inches high with sheet metal bases 10 inches wide and are of varying lengths. Most frames have their own fuse panels which are mounted on the top. Nomenclature is important. The name given to a type of equipment performing a specialized function in the system often reveals its purpose or use in that system. For example, Figure 7-14 shows a Trunk Link and Trunk LInk Extension Frames while Figure 7-19 depicts the Marker Frame. It is worthwhile to note from these figures and Figure 7-12 that link frame types contain crossbar switches primarily; while frames housing control equipment such as controllers, senders, markers, trunks, etc., contain circuit elements other than crossbar switches.

2. Trunk Link

The trunk link frame shown in Figure 7-14 consists of primary and secondary bays of switches and relay equipment comprising 200 links used for interconnection of incoming trunks and office junctors. The primary ends of the links are arranged to serve 160 incoming trunks (basic

TCI Library: www.telephonecollectors.info

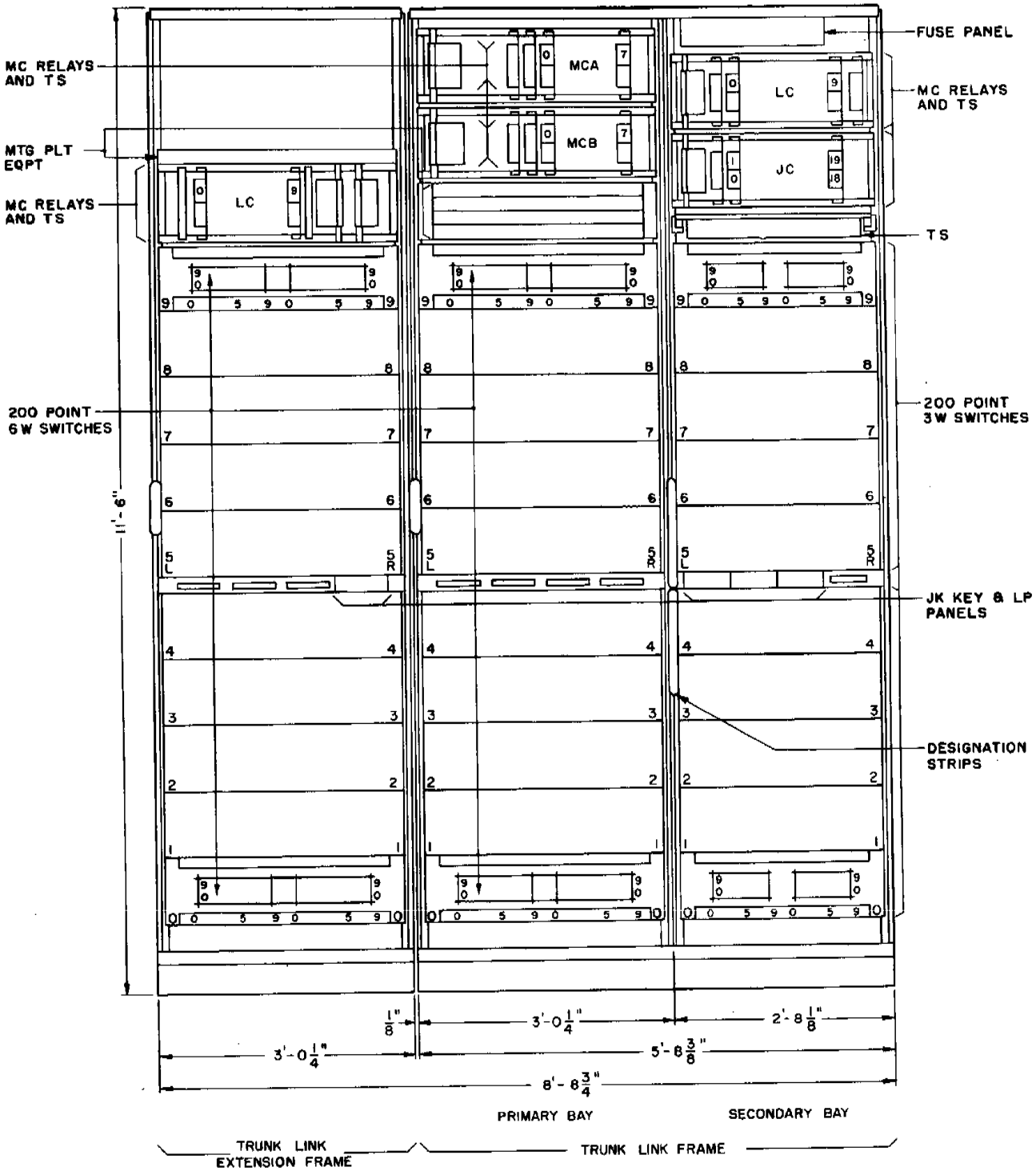

Figure 7-14 - Trunk Link and Trunk Link Extension Frames

TCI Library: www.telephonecollectors.info

frame) or 320 trunks (with trunk link extension frame). The secondary ends of the links serve 200 office junctors. The trunk link frame is arranged to operate with a maximum of eight markers and 20 office link frames and will serve any combination of AMA and non-AMA trunks, limited only by the decade requirements and cabling considerations.

The trunk link extension frame provides for a maximum of 160 trunks to which the trunk links are given access by a multiple between the primary and primary extension switches.

The trunk link arrangement is symbolically represented in Figure 7-15.

3. Office Link

This 2-bay frame and one-bay office extension frame are the same as the corresponding frames used in No. 1 local crossbar offices. A second extension frame may also be furnished in tandem offices to provide increased trunk capacity.

The office link frame has a capacity of 200 links, the primary switches of which serve 200 office junctors. The secondary switches provide for 100 outgoing trunks if the switches are not split and a maximum of 200 or 300 outgoing trunks if the horizontal multiples of all switches are split. The extension frame has a capacity of 100 outgoing trunks.

On the basis of 200 or 300 trunks per frame and a maximum of 20 office link frames (as limited by the marker), the physical maximum number of outgoing trunks per marker group is 4000 with one extension frame and 6000 with two extension frames. To insure uninterrupted service, a test group of trunks is divided between two office link or extension frames, and the frames are furnished and operated in pairs.

The office link arrangement is symbolically represented in Figure 7-16.

TCI Library: www.telephonecollectors.info

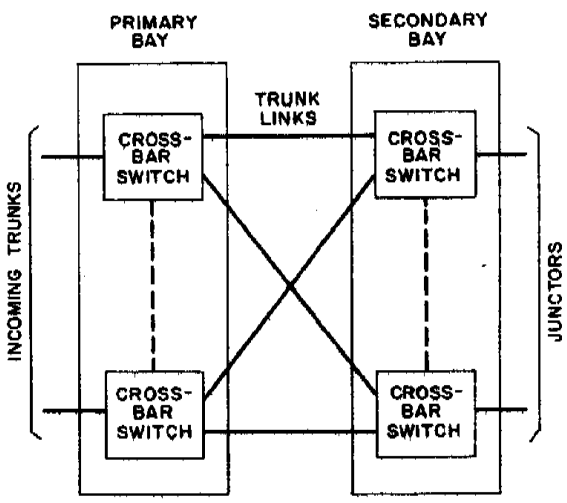

Figure 7-15 Trunk Link Frame - Primary and Secondary Bays Connected by Trunk Links

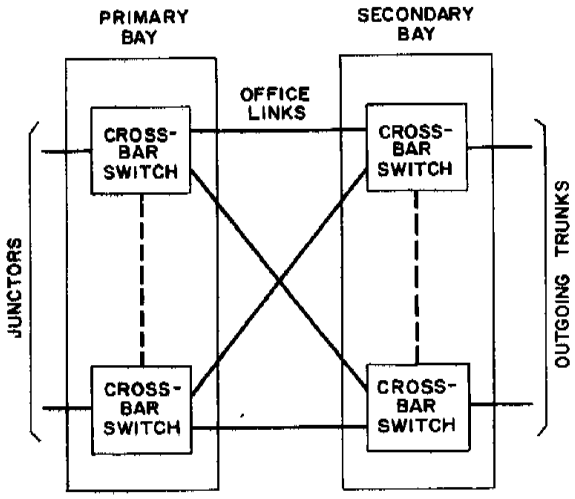

Figure 7-16 Office Link Frame - Primary and Secondary Bays Connected by Office Links

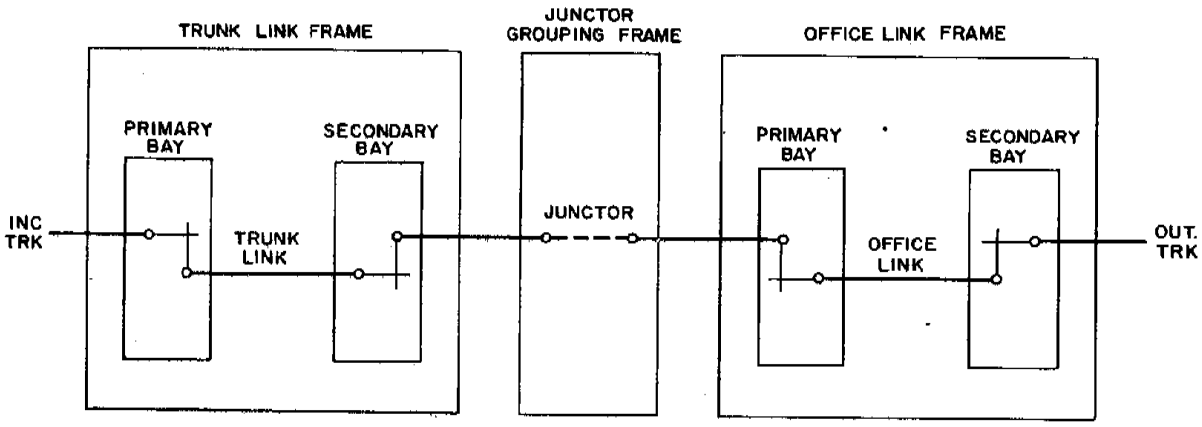

Figure 7-17 A Complete TJO Channel

TCI Library: www.telephonecollectors.info

4. Office Junctor Grouping Frame

This is a 2-bay frame on which are mounted terminal strips and jumper distributing rings used to interconnect the secondary of the trunk link frames with the primary of the office link frames in such a way as to obtain complete access of incoming trunks to outgoing trunks. In addition to this, the grouping frame is arranged so that as the size of the office increases, the effort required to change the junctor distribution is kept to a minimum. Figures 7-18a and 7-18b illustrate an initial and a growth distribution arrangement.

The junctor channel between the trunk link frames and the office link frames is referred to as a TJO channel. A channel consists of a trunk link, a junctor, and an office link connecting an incoming trunk to an outgoing trunk as represented in Figure 7-17.

5. Sender Link

This frame is a 2-bay structure. Four 200-point, 5-wire primary switches and four 200-point, 5-wire secondary switches, together with the sender subgroup connector multicontact relays and terminal strips, are mounted in one bay. The other bay contains a fuse panel, trunk group connector multicontact relays, and two controller circuits enclosed in a front casing and a rear enclosure.

The sender link frame is provided with ten groups of four primary-secondary links, each group having access on the primary switches to ten trunks and on the secondary switches to a total of 40 senders of either of two kinds. The frame serves a maximum of 100 trunks and has access to a maximum of 80 senders.

Each of the two controller circuits, A and B, serves half of the 40 links interconnecting the primary switch verticals with the secondary switch verticals. Each group of four links serving ten trunks is made up of two A and two B links.

TCI Library: www.telephonecollectors.info

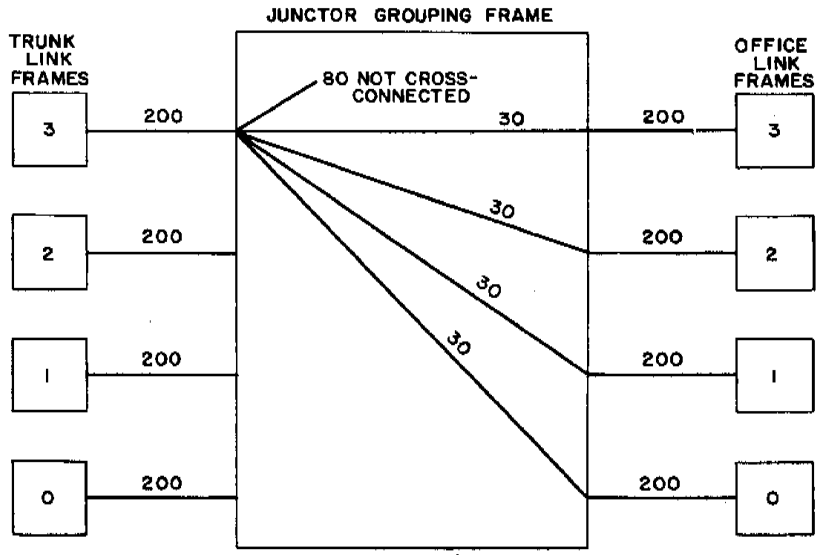

Figure 7-18a Junctor Groups - 4-4 Size Office

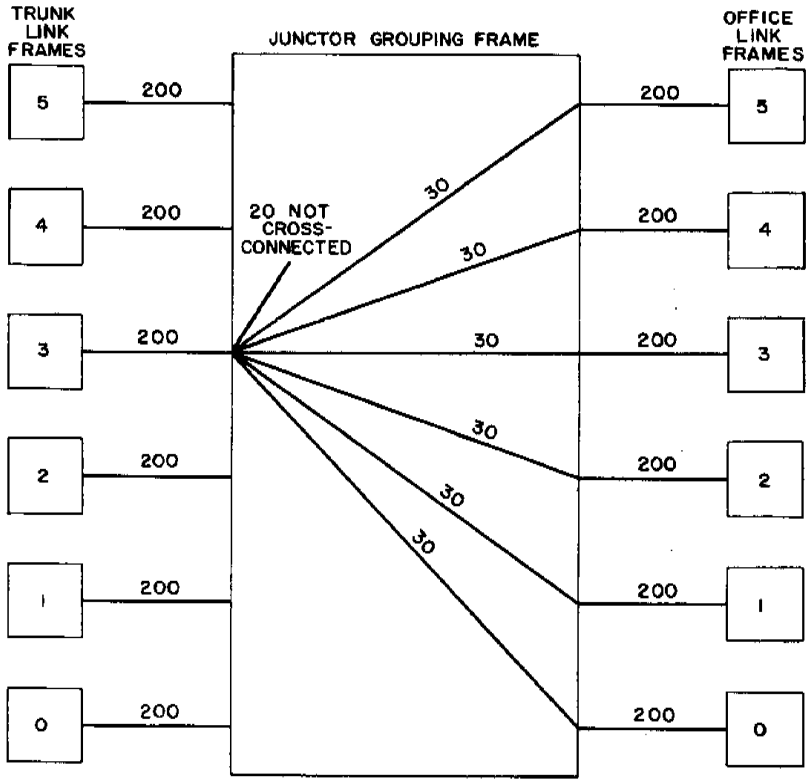

Figure 7-18b Junctor Groups - 6-6 Size Office (Initially 4-4 Size)

TCI Library: www.telephonecollectors.info

The ten horizontals of each secondary switch are cabled to ten senders of one kind or to ten senders of each of two kinds. These two kinds of senders may be revertive and dial pulse, revertive and multifrequency, dial pulse and multifrequency, or PCI arranged for AMA and multifrequency, etc. When there are two kinds of senders, the horizontal multiple strapping is cut at the point corresponding to the division between the links serving trunks requiring one kind of senders and those serving trunks requiring the other kind. Senders are treated in switch subgroups of five. Each switch subgroup of senders appears at secondary switch horizontals 0 to 4 or 5 to 9. Each group of four links has access to senders of one kind only. The multiples for the different kinds of senders are entirely independent of each other and each may appear on some frames to the exclusion of the other kind. The sender multiple for each kind of sender is arranged so that all sender subgroups have approximately the same number of appearances and are extended through the greatest possible number of frames.

6. Senders

A sender is used to assist in the completion of a call through the tandem office. The sender receives and stores information required by other circuits and controls the selection in the tandem office of a trunk to the desired terminating office.

The sender receives from the originating office the called number and the calling number (when the tandem office is arranged for automatic number identification (ANI) operation).

The sender receives and registers from the sender link frame, the trunk link frame number which serves the trunk, the trunk class mark, trunk data group number, rate class, if any, and other information required to complete the call.

After the sender registers the office or area and office codes, it connects through a marker connector to the marker. It transmits information to the marker and receives from the marker information that is required to complete the call.

TCI Library: www.telephonecollectors.info

There are four types of senders and sender frames available, namely: revertive, PCI, dial, and multifrequency pulse. The pulsing used in transmitting the called number from the originating office to the tandem sender indicates the type of sender.

The revertive pulse sender frame has a capacity of five revertive senders. This sender functions with trunks incoming from panel or crossbar offices that control the routing of the call partly or wholly on a revertive pulsing basis. It is used to complete calls to panel, crossbar, step-by-step, and manual offices.

The revertive sender is arranged to register seven digits and to complete calls by revertive pulsing, dial pulsing (4, 5 or 6 digits), and on a straightforward basis. PCI calls are completed by closing a circuit for the direct transmission of PCI pulses from the originating office over the tandem completing trunk.

The PCI, dial, and multifrequency pulse senders are arranged for AMA, but will also handle non-AMA calls. They are able to register and out-pulse a greater number of digits than the revertive sender and to complete calls by revertive, PCI, dial, and multifrequency pulsing and on a straightforward basis.

The PCI sender frame has a capacity of three PCI senders. This sender is used in the completion through tandem of calls dialed by subscribers in panel and crossbar offices. PCI pulsing into the tandem office is used to obtain greater code capacity (640 as compared to 300 for revertive) and to permit outpulsing of party letters from the local office. It is arranged to register eight digits and to outpulse four to eight digits on a dial or multifrequency basis. The digits may be four or five numerals or four numerals and a party letter preceded, if desired, by 1-, 2-, or 3-code digits. The code digits may be transmitted as registered or converted to any other values by translation from the marker.

TCI Library: www.telephonecollectors.info

The dial pulse sender frame and the multi-frequency pulse sender frame have a capacity of four dial pulse senders and four multi-frequency pulse senders respectively. The dial pulse sender is used in the completion through tandem of calls from step-by-step subscribers, from manual, DSA and toll switchboards equipped with dials, from other senders arranged for dial pulsing. The multifrequency pulse sender is used in the completion through tandem of calls from senders arranged to transmit multifrequency pulses and from manual, DSA, and toll switchboards equipped for multifrequency keypulsing. These senders will accept three to eleven digits and will outpulse one to eleven digits. The out-pulsed digits may be as registered, 1, 2, or 3 digits prefixed to the registered digits to be outpulsed, the first three digits changed and on area calls, the first three registered digits may be deleted and the next three digits code converted.

The dial pulse sender is arranged for bylink operation to avoid second dial tone to step-by-step subscribers. With this feature, the first three digits following the directing code are registered in an incoming register which is connected to the tandem incoming trunk by the incoming register link. .Subsequent digits are dialed directly into the sender. The digits in the register are transferred to the sender through a sender register connector.

The association of trunk, trunk link, and sender link frames is by direct cabling. The 160-trunk capacity of the basic trunk link frame is accommodated on ten primary switches. The added 160 trunk capacity of the trunk link extension frame is accommodated on ten primary switches. Each switch accommodates 16 trunks in pairs on eight levels. The other two levels are used for discriminating purposes to serve the proper one of a pair of trunks involved in a given call. A group of ten trunks is considered to be of one type from the standpoint of sender requirements and code grouping as well as circuit features. It is cabled to appear as a primary switch group of ten trunks on the sender link frame. It is served, therefore, by that one type of sender to which

TCI Library: www.telephonecollectors.info

it can give but one indication as to the associated trunk link frame number and code group. Because of this, trunks may have traffic characteristics differing in general between decades or groups of a maximum of ten trunks. These groups are cabled to the trunk link frames in such quantities that each frame serves trunks of varying characteristics in approximately the same proportion. To carry this plan of load distribution still further, the ten trunks of each group are terminated one in each of ten primary switches of the trunk link frame. Since the trunk link frame gives the marker indication by primary switch levels of certain characteristics of the associated trunks, it is necessary that both trunks on each level be of the same type in this regard.

7. Multifrequency Current Supply

When senders are arranged for multifrequency outpulsing, multifrequency current supply equipment is required. This frame consists of two 6-frequency oscillator units, an alarm and transfer unit, distributing resistance panels, and miscellaneous equipment.

8. Marker Connector

The function of a marker connector is to connect a sender to an idle marker for the selection of a trunk to the proper destination and for information necessary for completing the call.

The dial pulse and multifrequency senders transmit to the marker on certain leads on a two-out-of-five digits basis. The revertive and PCI senders transmit to the marker on certain leads on a two-out-of-seven digits basis. These different systems of transmitting to the marker result in these leads in the marker multiple differing in designation and use at the marker. Multifrequency senders, for example, when not arranged for foreign area translation, transmit to the marker on certain leads on a two-out-of-seven basis and on a two-out-of-five basis when arranged for foreigh area translation.

TCI Library: www.telephonecollectors.info

9. Marker

In completing a call through a crossbar tandem office the marker is used to decode the office or area code, to select and test the corresponding outgoing trunk group and channels thereto, to set up information in the sender for handling the call, and to operate the proper select and hold magnets on the trunk and office link frames to connect the incoming trunk to the selected outgoing trunk. Calls may originate in step-by-step, crossbar, and panel offices, private branch exchanges, and at dialing and keypulsing switchboards. They may be completed to panel, crossbar, step-by-step, and manual call indicator offices, to private branch exchanges, and to official codes; they may be extended to panel sender, crossbar, step-by-step, and manual call indicator tandem offices, and to panel distant office equipment. Operator calls may be extended to manual straightforward positions.

In processing a call involving an area code or PBX indialing, the marker receives six digits. The first three digits are decoded and used to cause a translator to be connected to the marker. The translator registers and decodes the second three digits and causes an FAC code point in the marker to be grounded.

Routing information is obtained from two wires threaded through rings in a ring field consisting of nine horizontal rows of rings, each row containing from three to seven rings. Part of the routing information is stored by threading a wire connected to a code point through one or two rings in each row, as required, to a first string firing circuit terminal. The remainder of the routing information is stored by threading a second wire from a related second string terminal through one of two rings in each row, as required, to a second string firing circuit terminal. When the code point is grounded, a surge is sent through the first wire; a voltage is induced in every coil through which the wire is threaded, firing associated tubes which operate associated relays. The output of these relays are registered and the tubes and associated relays released. The

TCI Library: www.telephonecollectors.info

related second string terminal is then grounded and the second string firing circuit sends a surge through the second wire which induces a voltage in every coil through which the wire is threaded, firing associated tubes which operate associated relays. The output of these relays is registered and completes the route information for the particular code point.

The marker frame consists of a single-bay marker control unit and a double-bay marker route unit shown in Figure 7-19.

10. Translator

The translator frame, is a single-bay frame used in conjunction with the marker to provide for 6-digit translation for a maximum of five foreign areas with 60 routes for each area. Its use provides for selecting the best route to a particular office in a foreign area where there are several routes by which the tandem office can reach the foreign area. It is also used for selecting a particular PBX when several share a 3-digit code.

11. Trunks

The trunk frames accommodate the numerous trunks used to provide incoming calls access to crossbar tandem switching equipment elements. The trunk frames are single-bay structures accommodating either 23-inch mounting plate units or 30-1/2 inch mounting plate units. The frames have capacities of 10, 20, 30, 40 or 60 trunks depending on the apparatus involved. Trunks are grouped in decades of one to ten trunks numbered 00 to 09, 10 to 19, etc. or 50 to 59 on the trunk frames. The trunks in a decade have certain common requirements and are handled on a decade basis at the various trunk appearances. At the trunk link frame, each trunk decade (00 to 09, 10 to 19) is connected at the trunk link frame so as to contribute one trunk to each of the ten primary switches on the frame. Each primary switch accommodates a maximum of sixteen trunks, two on each level from 2 to 9. Trunks 00 to 09 will normally appear as the first of the trunks on a level and

TCI Library: www.telephonecollectors.info

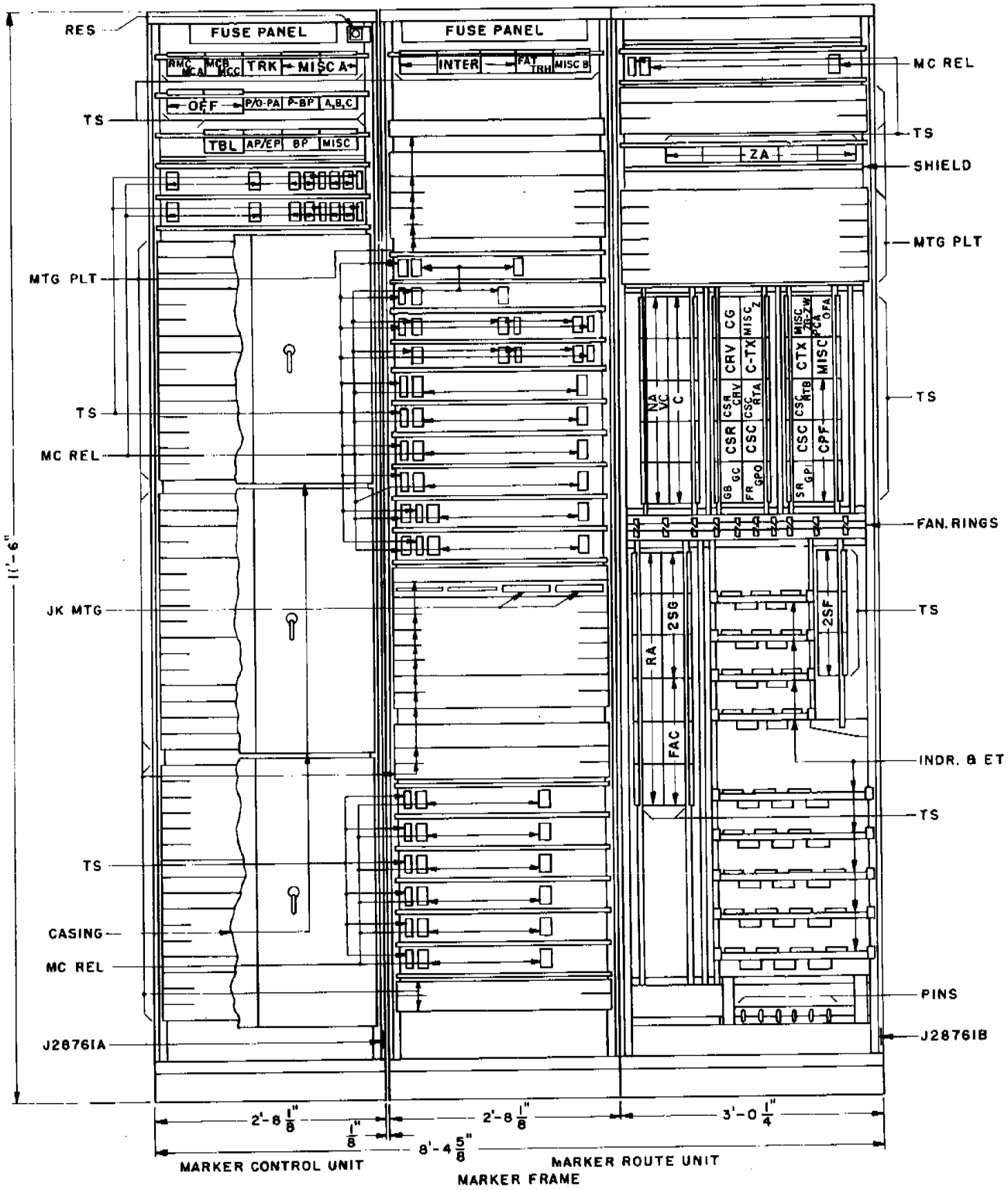

Figure 7-19 - Marker Frame

TCI Library: www.telephonecollectors.info

trunks 10 to 19 as the second. The trunk numbering consequently indicates by the units digit, 0 to 9, the trunk link primary switch on which it appears and by the tens digit, even or odd, the position on the level.

Trunk frames fall into four general categories, Non-AMA, AMA, 100B TSPS, and 2-way.

12. Non-AMA Trunks

The non-AMA trunk frames are remote-control zone registration, through supervision, repeater supervision, simplex or composite supervision, PCI pulsing, MF pulsing, and Extended Area Service, Loop or E&M.

Remote-control zone registration trunks are used for calls from panel offices arranged for remote-control zone registration. Charge pulses are sent to the originating office according to the rate cross connections in the trunk and the duration of the call. In the case of 2-rate trunks, the marker determines whether the lower or higher rate is effective.

Reserve trunks are provided to handle calls for remote-control zone registration trunks which are under routine test. They are automatically substituted for any associated service trunk under test and are arranged to assume, automatically, the particular rate schedule of the trunk for which they may be substituted at the time.

The through supervision trunks are used in completing calls from No. 1 Crossbar or panel offices.

The repeated supervision trunks are used on calls involving revertive, dial or multifrequency pulsing from crossbar, panel, step-by-step, and No. 4 type offices, and from operators.

The simplex or composite supervision trunks are used on dial pulsing or multifrequency pulsing calls from local or toll offices and may be arranged to rering forward with a simplex ringing signal.

TCI Library: www.telephonecollectors.info

The PCI pulsing trunks are used with PCI senders in completing calls from panel, No. 1, and No. 5 Crossbar offices on a non-AMA basis.

The MF pulsing trunks are used on calls from a toll switchboard in the same or adjacent building.

The Extended Area Service (EAS) trunk accommodates E&M or loop lead supervision trunks, arranged for dial pulsing and convertible to MF pulsing.

13. AMA Trunks

The AMA trunk frames are of three types PCI, dial pulsing, and multifrequency pulsing accommodating 30, 20 and 20 incoming trunks, respectively, and the common relay interrupter and miscellaneous equipment. These trunks are used on calls from subscribers in panel, step-by-step, and crossbar offices and control the recording of the call by the associated AMA equipment.

An AMA trunk functions the same as a non-AMA trunk in establishing a connection through the trunk and office link frames to an outgoing trunk. On seizure, a sender arranged for AMA is attached through a sender link. In processing the call, the trunk identified itself to the recorder through the call identity indexer causing the trunk number to be perforated as part of the initial entry. After the call is answered, the trunk again calls in the recorder to perforate the trunk number with the answer time entry. By means of the trunk number the separated elements of the call are brought together in the accounting center for billing purposes.

When a call originates in a step-by-step office, a DP trunk is seized after a directing code is dialed by the subscriber. In the interdigital time between this directing code and the area or office code, the trunk causes a register link to seek an idle register and a sender link a sender. It is intended that a register be connected in the interdigital time and record

TCI Library: www.telephonecollectors.info

the three digits of the area or office code. The sender must be connected before these three digits are recorded in the register. When the register has recorded three digits, it signals the sender to record the remaining digits. Subsequently the area or office digits are transmitted to the sender through a sender register connector and the register disconnects. As soon as these digits are recorded in the sender, a marker is called in and the call is processed as for other trunks.

Special toll trunks cover the handling of calls such as person-to-person, reverse-charge, charge to third party, or credit card charge. The customer dials a directing digit followed by the called number. The directing digit directs the call to the tandem office over trunks associated with the traffic service position. On seizure, the trunk is connected to a tandem sender by way of its associated sender link and controller circuit. After the calling and called numbers are received by the sender, it signals the trunk circuit to connect to an idle operator's position through its associated switchboard link and connector circuit. The position requests the services of a data transfer circuit which connects to the trunk and sender circuits and transfers the call data to registers at the selected position. The operator is then connected to the transmission circuit for talking to the calling customer, while the sender calls a marker to set up a channel to the desired outgoing trunk. The trunk circuit assists in setting up this connection by identifying itself to the marker, closing the first crosspoints in the trunk link frame, and supplying means for maintaining the connection through the trunk and office links for duration of the call.

Recording-completing trunks provide service for customers who desire operator assistance. The customer dials an operator code and is routed to the tandem office over a recording completing trunk associated with the 100B traffic service position.

TCI Library: www.telephonecollectors.info

When a customer dials the operator code, a recording completing trunk in the tandem office is seized which causes a tandem sender to be connected. After ANI (Automatic Number Identification) information is recorded, the sender passes a position request signal to the trunk. After receiving the call details, the position enables conversation to take place between the calling customer and the operator.

The customer informs the operator of the called number and whether the call is person to person, station to station, station paid, collect, or special, and she then keys this information into her position register. When the position is reattached, the position calls in the data transfer circuit and the called number is passed from the position register through the data transfer circuit.

There are a few types of calls which the traffic service position operator will not complete. They are: overseas calls, marine operator calls, conference calls, mobile telephone calls, and sequence calls. In these cases, the operator initiates a transfer of the call. The trunk starts a trunk finder which cuases a cord-type tollboard operator to take up the call. The 100B TSPS operator will be bridged on the transfer connection and will pass the call details. After this she releases her position, leaving the transfer connection under joint control of the calling customer and the cord-type toll switchboard operator.

Centralized dial coin trunks are furnished in a tandem office to permit the handling of calls dialed by coin subscribers. When the incoming coin trunk is seized at the tandem office, it connects to a sender through the sender link frame. From the sender link, the sender receives information identifying the trunk class and its data group number. The sender receives and registers the called number followed by the station paid start pulse consisting of 1500 and 1700 cps. After this the sender requests ANI from the originating office. Following receipt of the ANI information, the sender signals the trunk to bid for a position which in turn bids

TCI Library: www.telephonecollectors.info

for a data transfer circuit. The data transfer circuit, when seized, closes through a number of transmitting and receiving leads between the sender, the trunk, the rater, and the position. The sender passes the called and calling number information as well as the station (1+) mark to the position. The sender passes to the rater the first six digits of the called number, a 7- or 10-digit mark, class of service, recorder number and the station mark. The rater also receives the office index from the trunk and combines this with the recorder number to determine the originating rate center from which the call came. From the above date, the rater determines the rate treatment number which is used by the computer to indicate the charges for the duration of the initial and overtime periods. In addition, the rater determines the duration of the initial period to set the trunk timer for the initial period. Should the call be to a vacant code, the sender requests the marker to set up the call to a VACANT CODE announcement. Should the call be to a point which cannot be rated automatically, it must be manually rated by the operator.

14. Traffic Usage Recorder

The traffic usage recorder frame is used to measure usage of various circuits by scanning on a 100-second cycle and recording busies on traffic registers. The crossbar switches are divided into scan and register switches which provide for scanning a maximum of 3600 circuits and provide access to a maximum of 1200 traffic usage registers. Circuits having holding times over 10 seconds are given one scan switch appearance and the 100-second scanning rate provides accurate hourly measurements in terms of hundred call seconds (CCS). Circuits having holding times of 10 seconds or less are given ten equally spaced appearances on the switches and are scanned at a 10-second rate to obtain the desired accuracy.

The traffic usage recorder equipment also controls the cameras used to photograph traffic usage registers or regular traffic registers. The traffic register equipment provides for

TCI Library: www.telephonecollectors.info

obtaining traffic data, such as overflow, group busy, peg count, load and usage. A single-sided distributing frame is furnished adjacent to the traffic registers for terminating the many leads from the connecting circuits and for flexibility of cross connections between the traffic registers and the connecting circuits.

15. Service Observing

Multiline service observing equipment for incoming trunks provide for service observing at a No. 12 service observing desk in the same or another building. This equipment consists of small surface-wired units and patching facilities mounted in relay rack bays. Each multiline service observing circuit has a maximum of 50 loop connectors arranged for patching to the relay-rack appearance of the trunks to be observed.

16. Floor Alarms

The floor alarm unit accommodates the alarm relay equipment for a variable number of frames and aisles of equipment distributed over a maximum of two floors. It provides audible and visual signals under trouble conditions and supplements the alarms appearing on the individual frames. The audible signals by means of distinctive tones indicate the type of alarm. The visual signals in the form of floor and aisle pilots using differently colored lamps indicate the general nature and location of the trouble. The alarms may be transmitted to an alarm receiving center by means of alarm sending and transfer equipment when unattended operation of the tandem office is required.

17. Power

The power requirements for crossbar tandem offices are similar to local No. 1 Crossbar offices and the same power plants may be used if available. For a new office a 302A plant for 24 and 48 volts is used. For zone resigtration trunk timers or master timers, a source of 22 volts ac is required. This is supplied from a relay rack mounted 506A power plant unit. A

TCI Library: www.telephonecollectors.info

504B plant is required to furnish 115-volt, 60-cycle current from the office battery during commercial power failure or low voltage to the 506A power plant and to the perforator cabinet output reel motors. For zone registration charging pulses a 170-volt supply, tapped at 135 volts, is required. Various circuits require + 130 volts. This voltage is supplied by 405A or 410B power plants. Low tone and ringing are taken from an existing local office ringing plant. The 48-volt talking battery required for some trunks is obtained through filters.

For a comprehensive look at the power plants mentioned above refer to "Telephone Power Plants," Chapter 18.

C. SYSTEM MAINTENANCE

As in all switching systems a variety of test equipment form an integral and indispensable part of the system. Test frames detect and localize malfunctions and other circuit deficiencies in the system. Corrective action is then applied by the maintenance personnel.

1. Incoming Trunk Test

The incoming trunk test frame, is a single bay of equipment used for testing the incoming trunks in the terminating office. It is associated with these trunks through the incoming trunk test connector frame and makes its tests automatically or repeatedly as desired. One frame has a basic capacity of 4000 trunks but may be arranged for an additional 4000 if required. A supplementary teletypewriter frame may also be provided for automatically printing records of transmission tests.

2. Sender Test

The sender test frame, associated connector frame, the supplementary test frame, and the register test connector frame, provide for testing PCI, revertive pulse, multifrequency pulse and dial pulse senders, local CAMA operator positions, trunks to toll or DSA switchboards equipped for CAMA operation, incoming registers, and

TCI Library: www.telephonecollectors.info

transverters. Remote multifrequency pulsing positions are not tested by this test frame. The testing of outgoing trunks to remote positions and the operation of these positions is done at the manual outgoing trunk test frame.

3. Trouble Recorder and Connector Frames

The trouble recorder frame, the associated trouble recorder connector frame, are used to record automatically troubles encountered during the establishment of service and test calls. A record is made by punching holes in a card by means of a perforator. The record card is printed so that the information recorded can be read directly by a maintenance man.

4. Sender Make-busy

The sender make-busy frame, is a single-bay frame accommodating a jack field, registers, and relay equipment. The primary function of the sender make-busy frame is to provide sender make-busy jacks for use in removing any sender from service. Associated with these MB jacks are SS lamps which light to indicate as well as to identify stuck senders; SC lamps which light to indicate as well as to identify stuck senders involved in delayed assignments of PC1 calls and CP keys affording means of canceling the automatic priming feature of any stuck sender when it is desired to trace the trouble. There are sender subgroup make-busy jacks, jacks to reduce the timing intervals of the senders, a load register lamp per group of senders, and an alarm which operates when a predetermined number of sender subgroups become busy.

D. CROSSBAR TANDEM SWITCHING TELEPHONE CALLS

The path of an ordinary telephone call requiring a 3-digit translation is illustrated in Figure 7-20. The sequence of connections are numbered to aid in tracing the path.

TCI Library: www.telephonecollectors.info

The call arrives in the tandem office over an incoming trunk and leaves over an outgoing trunk. The incoming trunk may be selected by an operator, a local office, a tandem office, or a dial toll office. The procedure in the tandem office is the same in any case.

As shown in Figure 7-20, each incoming trunk has two major appearances in a crossbar tandem office; one on the trunk link frame (used for the talking connection) and one on the sender link frame (used for passing information to the common control equipment). The trunks are arranged in decades on the sender link frame to permit the sender link to provide to the sender information which is common to ten trunks.

The sender link frame is the first of the trunk appearances to be used. It consists of two sets of crossbar switches, primary and secondary. The incoming trunks appear on the primary switches and the senders on the secondary.

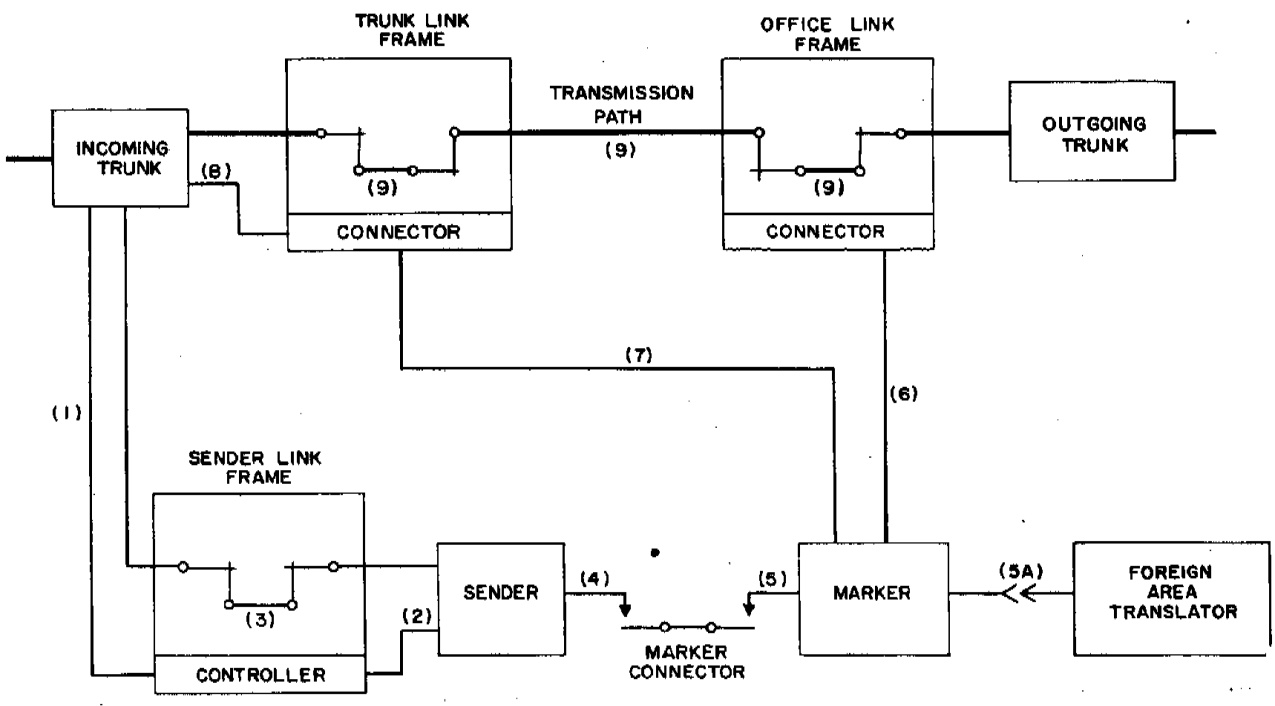

Figure 7-20 Path of a Call Through a Crossbar Tandem Office

TCI Library: www.telephonecollectors.info

As soon as an incoming trunk is seized, it signals a sender link controller (connection 1) to connect an idle sender for registering the incoming pulses. The sender link controller tests for and selects an idle sender (connection 2). The controller then sets up the connection through the crossbar switches of the sender link (connection 3). This completes the function of the sender link controller which releases from the connection and is free to serve other calls.

As soon as the sender is attached, it signals the originating operator or preceding office sender to begin pulsing. When three digits have been received, the sender signals the marker connector (connection 4) to seize an idle marker (connection 5).

The sender passes the first three digits (the code) to the marker along with the information derived from the decade arrangement on the sender link frame. The marker (1) decodes the information received from the sender, (2) operates one of its route relays from which it derives the information required for routing the call, and (3) passes the outpulsing instructions to the sender.

The marker then seizes the office link connector that has access to the pair of office link frames on which the outgoing trunk group is terminated (connection 6). As soon as it is connected to the pair of office link frames, the marker does two things simultaneously; (1) it seizes the trunk link connector that serves the trunk link frame on which the incoming trunk is terminated (connection 7) and (2) it starts testing for an idle outgoing trunk. (The marker knows the number of the trunk link frame from information stored in the sender which was obtained from cross-connections associated with the sender link decade arrangement.) The marker then instructs the incoming trunk through the sender to connect to the trunk link connector (connection 8), which in turn cuts through to the marker the test leads associated with the trunk links that serve the switch on which the incoming trunk is terminated.

When the pair of office link frames was seized, the marker also started testing for an idle outgoing trunk, as mentioned above. At this point, the marker signals the sender to release the marker connector which in turn releases the marker. This completes the first or decoding stage of the marker operation. The marker connection is now free to serve other calls. The marker may also serve

TCI Library: www.telephonecollectors.info

another call but only up to the point where the outpulsing instructions are passed to the sender. For the call in progress, the marker maintains a path to the sender via the trunk link connector, the incoming trunk, and the sender link (connections 7, 8 and 3).

When the outgoing trunk is seized and made busy, the trunk selection relay in the marker indicates whether the trunk is located on the even or odd office link frame. The marker then causes the trunk link frame to cut through the test leads associated with the junctors to that office link frame.

The office link frame cuts through to the marker the test leads associated with the office links serving the selected outgoing trunk.

The marker now has access to the test leads for the trunk links, junctors, and office links, and it proceeds to set up the connection from the incoming trunk to the outgoing trunk. It makes the channel test by testing groups of three leads simultaneously, selects one group, and then closes the crosspoints to establish the selected channel (connection 9). The marker signals the sender that the path has been established and then releases from the trunk link and office link frames.

The sender then sends a signal forward and upon receipt of a go signal it outpulses as it had been directed by the marker. After outpulsing is completed, the talking path is cut through. The sender and sender link then release and the call is under control of the incoming trunk.

When the incoming trunk receives a release signal from the calling end, it releases the switches through the office.

1. Call Requiring 6-digit Translation

A call requiring 6-digit translation follows the same method of operation as described above for a call requiring 3-digit translation up to the point of marker seizure. Since this sender is arranged for 6-digit translation and the first

TCI Library: www.telephonecollectors.info

three digits of this call are of the form NOX/N1X[1], the sender waits for six digits before calling in a marker.

The marker decodes the first three digits and operates an area relay rather than a route relay. The operation of this area relay causes the associated foreign area translator to be called in (connection 5A).

The fourth, fifth, and sixth digits are sent to the foreign area translator which translates them to one of 60 route indications. The marker uses this information to operate a route relay and the call is completed as described above.

2. Remote Control Zone Registration

The calls thus far described have involved no charging functions at the crossbar tandem. All charging was handled at the originating offices. Crossbar tandem can also handle calls where the message registers at the local office are controlled by signals from the crossbar tandem equipment. This is known as remote control zone registration.

Calls using remote control zone registration are handled by revertive pulsing trunks and senders. The trunks have options for various initial and overtime intervals and for various numbers of registrations for the initial and overtime periods. A trunk may be arranged for one or two rates. To indicate more than two rates, separate trunk groups to tandem must be used. Where a trunk is arranged for two rates, the marker examines the called code and determines which rate is to be applied.

3. Coin Zone Dialing with Local Office Operator Assistance

Crossbar tandem can also handle coin zone calls with the assistance operators located at the local originating office or in a near-by building.

[1]NOX/N1X Where area codes take this form
N = Any number from 2 to 9
X = Any number from 0 to 9

TCI Library: www.telephonecollectors.info

This type of call is dialed by a customer at a coin station and is routed to crossbar tandem by the local office. An operator is called in to request and monitor the initial deposit and to time the overtime on calls which exceed the initial period. The operator must also compute, request, and monitor overtime charges.

This arrangement is limited to a maximum of four charges per trunk group, and only traffic originating in panel and No. 1 Crossbar offices can be served.

This traffic is handled at crossbar tandem by PCI trunks and senders. The sender is arranged to delay outpulsing on these calls until it has received a go ahead signal from the operator.

4. Centrex Features

a. Inward Dialing

The association of crossbar tandem and PBX's (Private Branch Exchange) is shown in Figure 7-21. It is possible to employ crossbar tandem to dial direct to PBX extensions where a central office code is shared by more than one PBX. This is accomplished by assigning to the PBX a number series within a central office code used for PBX purposes at the crossbar tandem, with each extension assigned a standard seven digit number. As many as sixty P.B.X.'s can share one central office code. The marker will recognize the shared office code and arrange for six-digit translation using the office code and first three digits of the extension number. This permits reservation of numbers in groups of ten, so that the entire number series is used most efficiently.

For P.B.X. indialing, six digit translation is required for local type codes that are assigned to more than one P.B.X. and on a non-shared basis when the number of digits to be outpulsed to that P.B.X. varies on different calls. For example, six-digit translation is required on nonshared codes when the tandem office does not outpulse any digits to reach

TCI Library: www.telephonecollectors.info

the P.B.X. attendent (access to the attendent is on a separate trunk group) and does outpulse one to four digits to reach the extension. Two marker seizures are required on indialed calls requiring six-digit translation.

If a home area code plus an office code that is shared by several P.B.X.'s is received in the tandem, the marker sets up a connection to an appearance on the office link frame which is connected back through the office to the incoming trunk. This "loop around" operation causes the home area code to be deleted during the first connection through the office so that the call can be completed to the P.B.X. in the usual manner during the second connection. Three marker seizures are generally required for this type of call.

5. Other Features of Crossbar Tandem

In addition to the major adjuncts to basic crossbar tandem, toll, CAMA and the Traffic Service Position, there are a number of other features or changes of significance, many of which have been added recently to the tandem switching system. Most do not involve extensive new equipment as such, but rather changes or additions to already existing equipment. Of note is the following, with some mention of the equipment area affected:

a. PBX In and Out Dialing

This feature promotes means for dialing to and from PBX extensions without calling in the PBX attendant. For indialing each extension is assigned a 7-digit number which may be dialed by any authorized customer on either a local or toll basis. The first three digits make use of an unused office code in the area and several PBX's can share these digits by assigning each a block in the 10,000 numbers.

For outdialing the extension will dial an exit code (usually "9"), receive second dial tone from crossbar tandem and then proceed with dialing on local, toll or assistance calls in the usual way. Charging is by message register on one message unit nonovertime calls and by CAMA on all others.

TCI Library: www.telephonecollectors.info

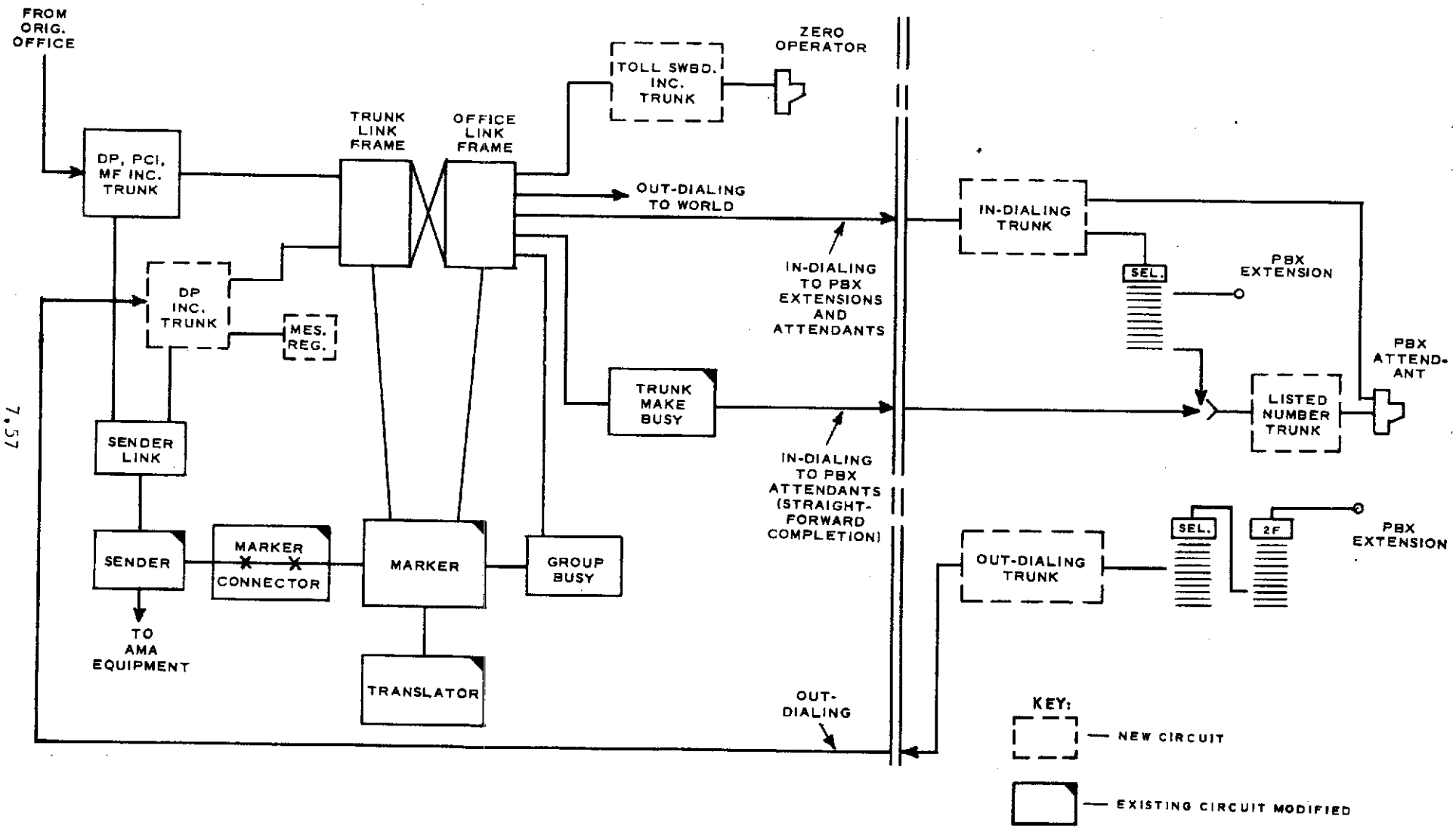

Figure 7-21 PBX In- and Out- Dialing Through Crossbar Tandem

TCI Library: www.telephonecollectors.info

E. CENTRALIZED AUTOMATIC MESSAGE ACCOUNTING

Centralized Automatic Message Accounting (CAMA) features have been introduced into the crossbar tandem system making it possible to provide the centralized facilities of AMA to all offices using the tandem office. Figure 7-22 depicts crossbar tandem with the first version of CAMA. A broader and more detailed description of CAMA is given in Chapter 14. However, in a limited manner, it would be appropriate to add that when a crossbar tandem office is arranged for AMA, additional functions and frames are required to record data for billing purposes and to complete special calls with the aid of a traffic service position operator. Billing data is recorded as perforations on paper tape as are local offices arranged for AMA. The tapes are processed in accounting centers on the same machines used in processing local AMA tapes.

The elements of an AMA call recorded for billing purposes include the called and calling subscriber numbers, the time of answer, the time of disconnect, the called area, message billing index, and the trunk number.

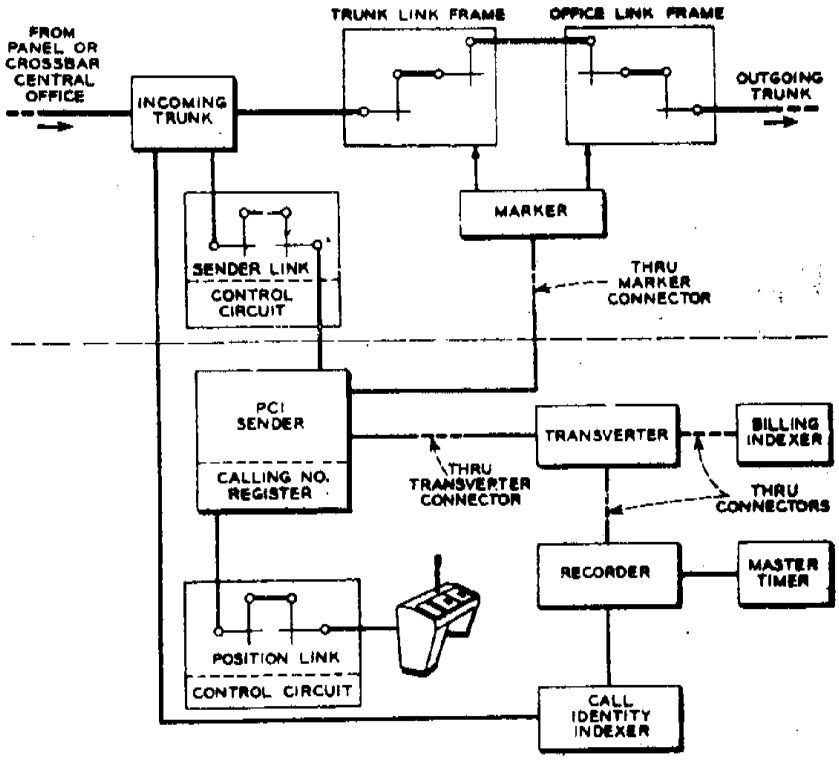

Figure 7-22 Functional block diagram of crossbar tandem with the first version of CAMA

TCI Library: www.telephonecollectors.info

On AMA calls, the calling number may be registered by an operator or by multifrequency pulsing from an originating local office arranged for automatic number identification. For operator identified calls, the sender causes the position link to connect the subscriber to an operator at the CAMA switchboard.

The AMA equipment consists primarily of a switchboard, perforators, position links, transverters, master timer, transverter connector, billing indexer, recorder, call identity indexer, 3-digit incoming register and link, sender register connector, 10-digit incoming register and link, data transfer, rater, timer link, and charge computer frames. The three digit incoming register and link (3-digit register) and its associated sender register connector are used in step-by-step areas to avoid second dial tone. The 10-digit incoming register and link equipment is also used in step-by-step areas; however, all digits are registered in the register and upon completion of dialing, this information is transmitted to the MF sender by way of the data transfer circuit.

TCI Library: www.telephonecollectors.info

CHAPTER 8

NO. 5 CROSSBAR SYSTEM

8.1 INTRODUCTION

The No. 5 Crossbar system was originally developed to fill a need for a system especially suitable for isolated small cities and for residential areas on the fringes of large cities. The design of the system was influenced by the special characteristics of telephone traffic in these regions. The percentage of calls completed to subscribers in the same office was expected to be relatively high. It was recognized that the system would have to interconnect with existing offices of all types. In addition, the tendency toward extension of dialing areas indicated that a local system with some provision for tandem or intertoll switching would simplify trunking, relieve the load on regular tandem offices, and reduce backhaul. This meant that where toll requirements are small, the No. 5 office could be established as a toll center with control switching point (CSP) features. Finally, the new concept of extended subscriber dialing demanded automatic recording of call details.

In addition to the requirements outlined above, the system also has built intc it other features that adapt it to new concepts of telephone service. Improvements and added features have widened the application of the No. 5 equipment. It is presently being used to handle traffic that varies from large metropolitan business exchanges to small rural centers of a few hundred lines.

The No. 5 Crossbar system is first of all a highly efficient local telephone switching system which can operate with all present local, tandem, and toll switching offices, except that it cannot direct calls through a panel 2-wire office selector. Table 8-1 shows the usual kinds of pulsing, or manner of operation, for the various combinations of No. 5 Crossbar and connecting offices.

No. 5 Crossbar has several features that distinguish it from previous local systems. The more important ones are:

a. Utilization of common control to a higher degree than any other electromechanical system

TCI Library: www.telephonecollectors.info

TABLE 8-1

TYPE OF PULSING USED BETWEEN NO. 5 CROSSBAR OFFICES AND OTHER TYPE OF OFFICES.

Type of Connecting Office	No. 5 Crossbar Office Type Received	No. 5 Crossbar Office Type Outpulsed
No. 5 Crossbar	MF DP RP FSP	MF DP RP FSP
No. 1 Crossbar	RP MF	MF RP DP
Crossbar Tandem	MF DP RP	MF DP RP PCI
No. 4 Toll Crossbar	MF DP	MF DP
Panel	RP MF	RP
Panel Distant Office Tandem	RP	No Provision
Panel Sender Tandem	RP DP	PCI
Step-by-Step Local	DP MF	DP MF
Step-by-Step Intertoll	DP MF	DP MF
Manual Local	MF	PCI Straightforward
Manual Toll	MF DP	Straightforward PCI

LEGEND: DP - Dial Pulsing
MF - Multifrequency
FSP - Frequency Shift Pulsing
PCI - Panel Call Indicator
RP - Revertive Pulsing

TCI Library: www.telephonecollectors.info

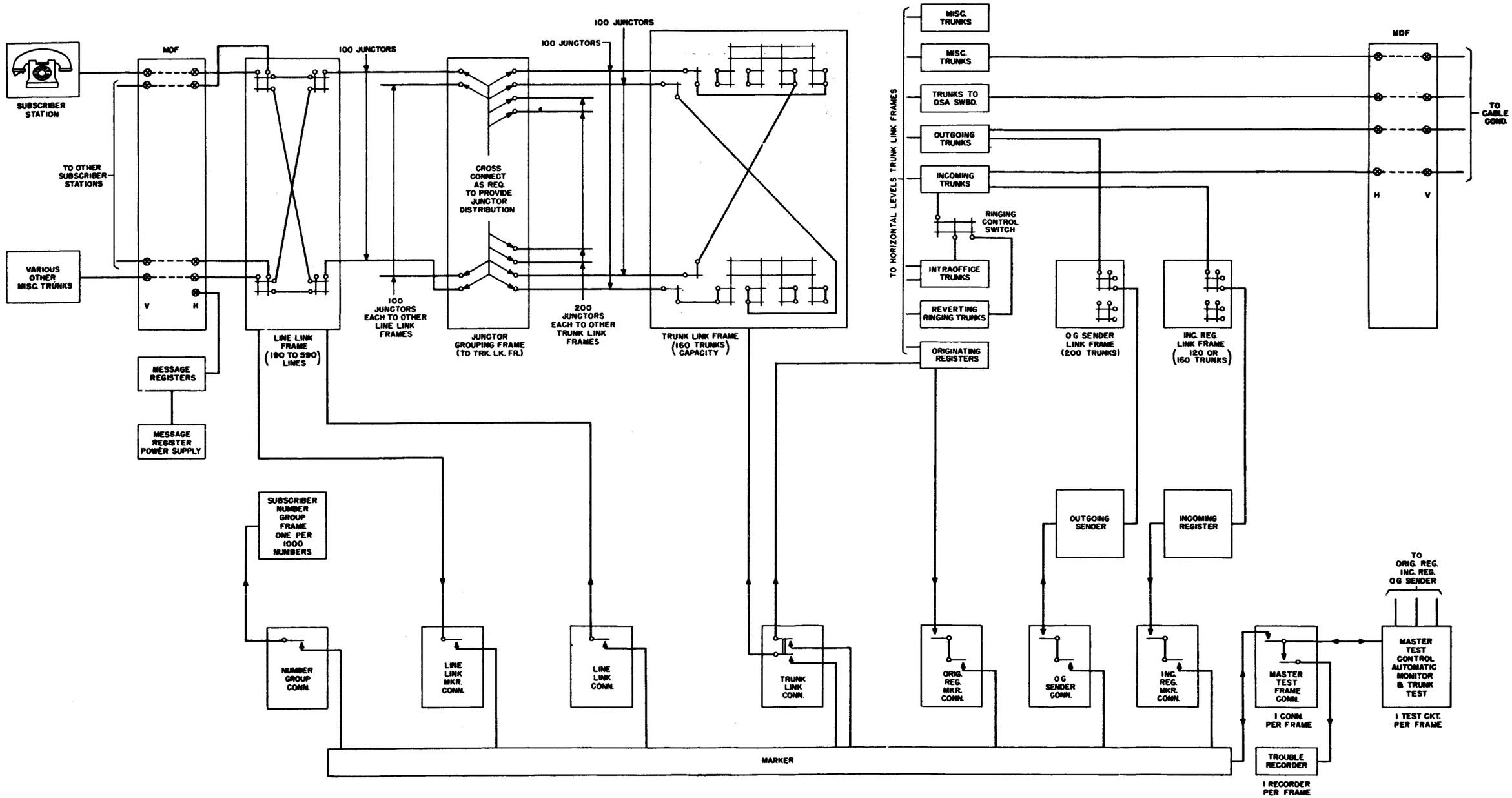

Fig. 8-1 - Equipment Schematic of No. 5 Crossbar Office

Figure 8-1

TCI Library: www.telephonecollectors.info

b. A unique switching plan. A single switching train is used for all traffic whether incoming or outgoing, or switched through.

c. Improved distribution of usage over various equipment units by means of rotating sequence and memory circuits.

d. Provision of toll and tandem switching features with the same common control equipment as is used for local traffic.

e. Improved trouble detecting features including automatic recording of failures on punched cards and automatic monitoring of pulsing circuits.

f. Provision of features essential to the expansion of operator and customer toll dialing; eleven digit capacity, alternate routing, code conversion, marker pulse conversion, six digit translation, and other similar features.

8.2 SWITCHING PLAN

The No. 5 system uses the fundamental two link frame, four-stage, switching network, but unlike other familar systems, employs a single switching network to handle all types of calls; incoming, outgoing or switched through. In addition, the connection of the subscriber to the dial register circuit is also made through this switching network. This eliminates the line link and sender link controllers, as well as the sender link frames required in the No. 1 Crossbar system. The functions of the controllers has been transferred to the markers while the function of the sender link frames has been consolidated with the switching network. A generalized block diagram is shown in Figure 8-1.

A. LINE LINK

The crossbar switches on the line link frame are divided functionally into line switches and junctor switches, as shown in Figure 8-2. Subscriber lines are connected to the line switch verticals. Line links, which are merely connecting wires, interconnect the line switches and junctor switches in a standard linkage pattern of 100 links. The basic line link frame provides 290 line terminations, ten no-test verticals and 100 junctor terminations. Since the calling rate and holding time

TCI Library: www.telephonecollectors.info

habits of subscribers may vary widely in different areas, provision is made for adding supplementary line switch bays of 100 or 200 line capacity in order to increase the line capacity of the frame to meet traffic requirements. These supplementary bays will increase the capacity of the basic frame from the 290 line minimum to 590 the line maximum. Figure 8-3 illustrates schematically a line link frame arranged for 490 lines. With the introduction of the wire-spring line link frame, a feature was added whereby line switch bays may be split between two line link frames. This feature along with the change in the size of the basic frame from a two-bay to a possible one-bay frame permits the line link frames to be furnished in sizes varying from a minimum of 190 lines and 10 no-test verticals to a maximum size of 590 lines and 10 no-test verticals, in increments of 50 lines. Line link sizes in 50 line increments are illustrated in Figure 8-4.

The line link frames just described are the frames that are used for two-wire subscriber lines or trunks. When it is necessary to switch four-wire traffic, a separate network, using line link frames of 190 line capacity using 5-wire switches is furnished.

Line links appear on the horizontals of the switches; ten line links on each switch. These ten line links are distributed among the ten junctor switches, one link to one horizontal on each of the ten junctor switches in a standard linkage pattern. This system of links permits each line on a line link frame to reach anyone of the 100 junctors serving that frame.

In addition, to the switches, line relays and control relays are also mounted on the frame. The hold magnets on the line switches are equipped with off-normal springs which serve as cutoff relays for the line circuit.

No. 5 Crossbar differs from earlier systems in that the same link frame can serve customers who have various classes of service. For example: flat rate, message rate, or coin. In the initial design, provision was made for a maximum of 30 classes of service on each line link frame and the associated marker group. As the system further developed and new features and services were introduced, the number of classes of service were also increased; first to 60 classes and ultimately to 100 classes, with 20 treatments for each class of service.

TCI Library: www.telephonecollectors.info

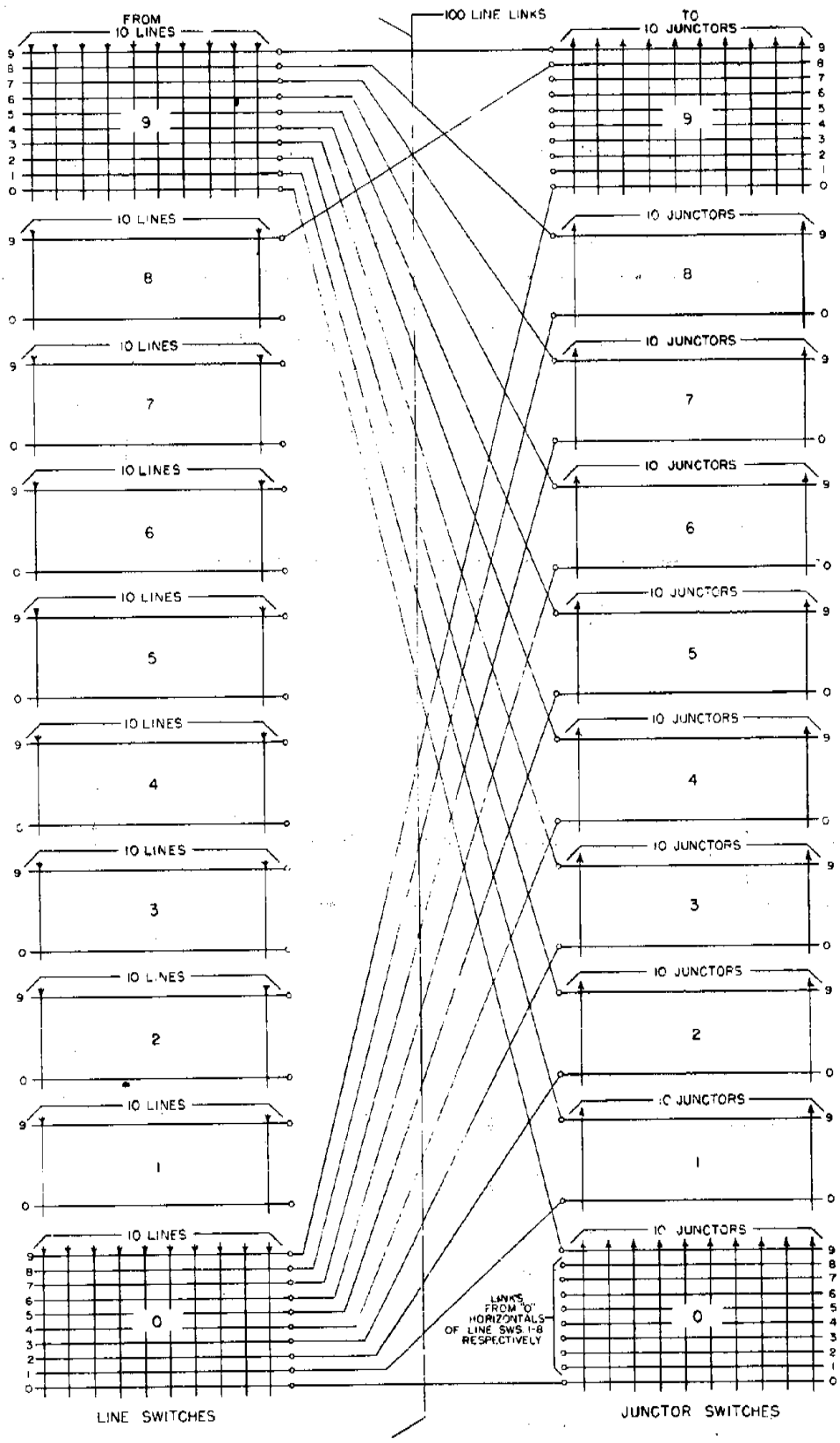

Figure 8-2 - Line Link Distribution

TCI Library: www.telephonecollectors.info

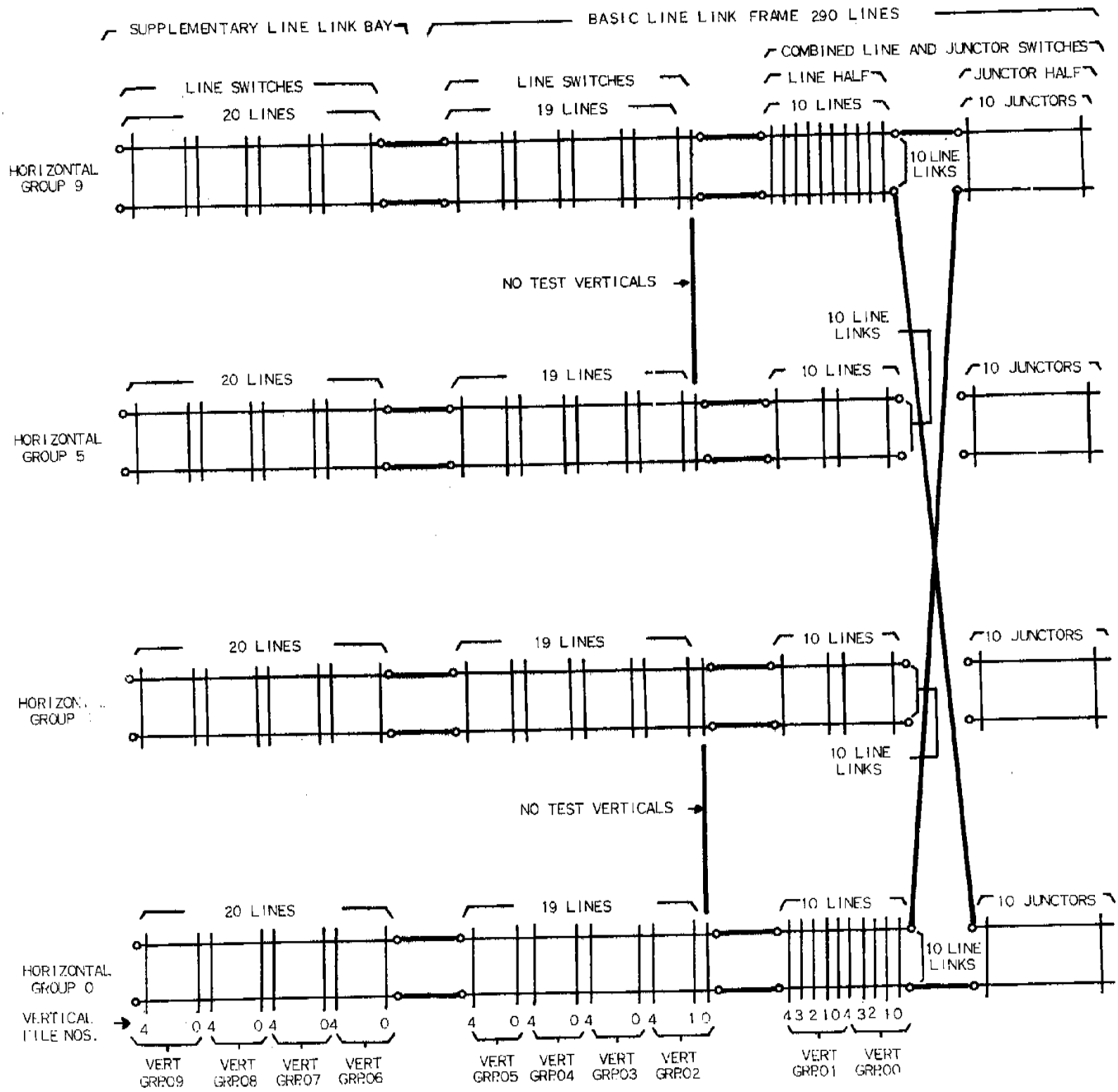

Figure 8-3 Line Link Frames Schematic Frame Arranged for 490 Lines

TCI Library: www.telephonecollectors.info

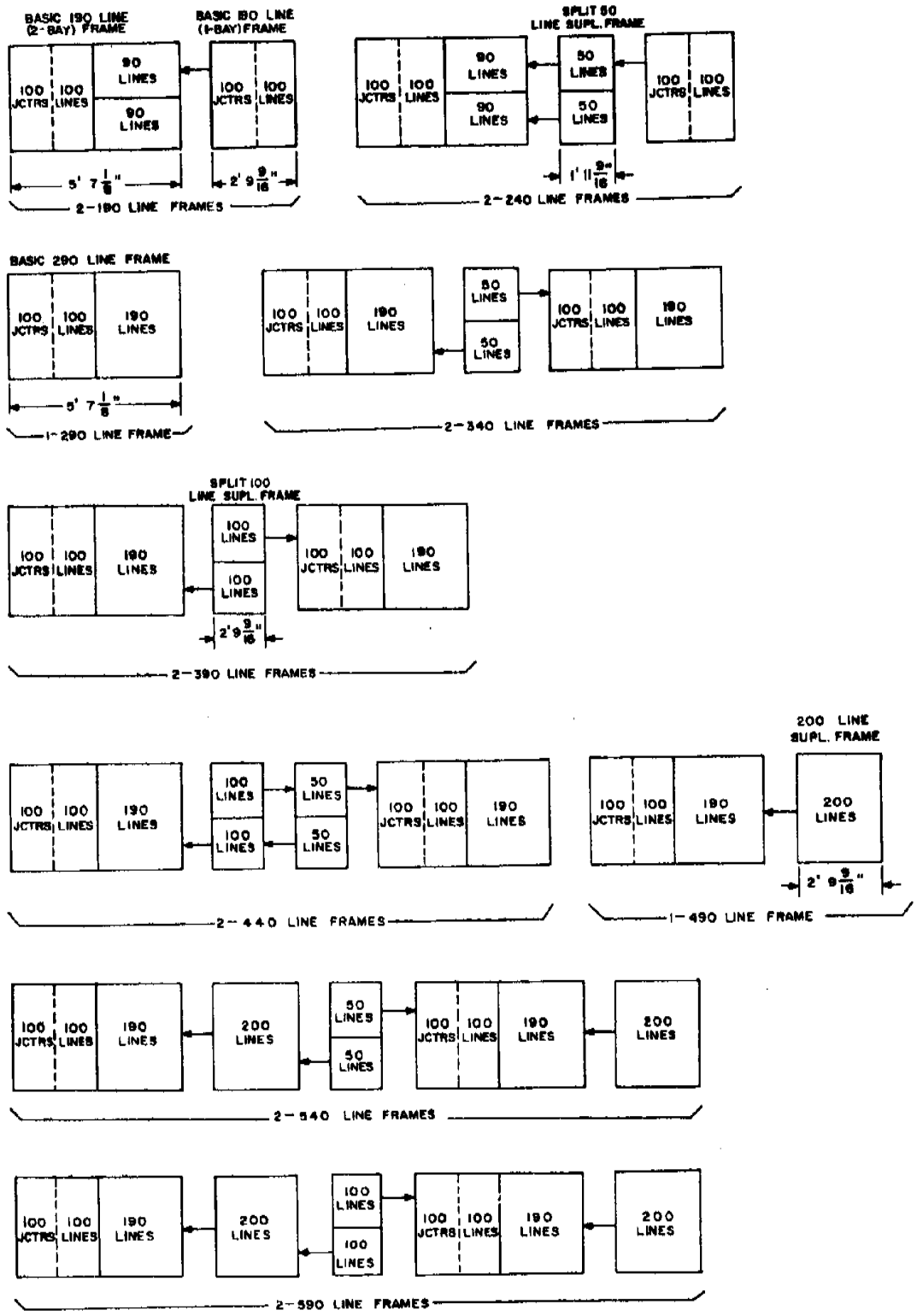

Figure 8-4 - Association of Line Link Basic and Supplementary Frames for 50-line Increments

TCI Library: www.telephonecollectors.info

B. TRUNK LINK

The crossbar switches on the trunk link frames are divided functionally into junctor switches and line switches, Figure 8-5.

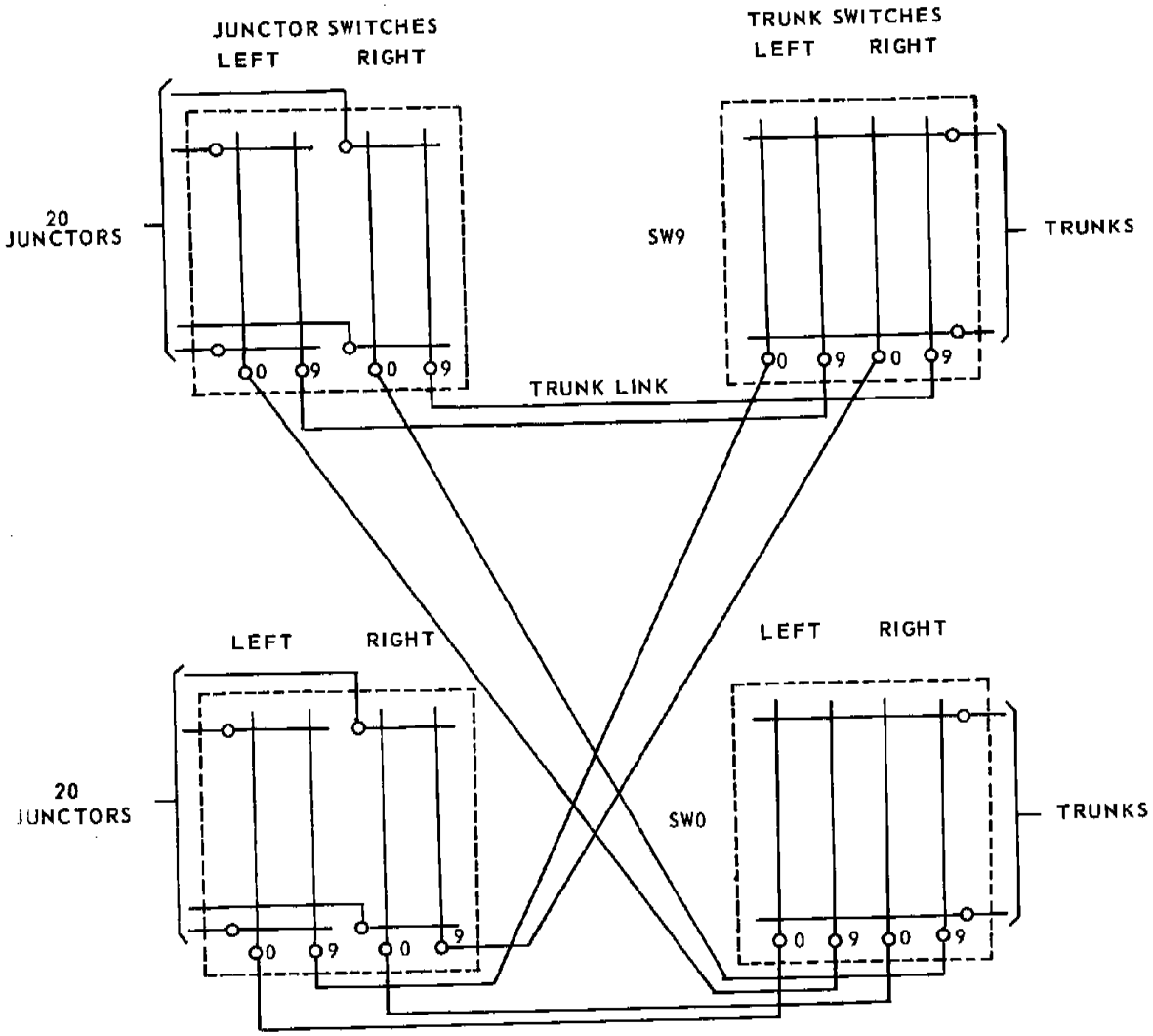

Figure 8-5 Trunk Link Distribution

Originating registers and trunks are connected to the trunk switch horizontals and junctors to the junctor switch horizontals. Trunk links, which are merely connecting wires, interconnect the junctor switches and the trunk switches.

TCI Library: www.telephonecollectors.info

The basic trunk link frame is a two-bay framework with each bay mounting ten 200 crosspoint switches. The 10 switches in one bay are six-wire switches and are used to provide terminations for 160 trunks.[1] The ten 200 point switches on the other bay are three-wire switches, used as junctor switches. While these switches are physically 200 crosspoint switches, their horizontals are split between the 10th and 11th vertical so that electrically there are 20 switches of the 100 crosspoint size. 200 junctors from the line link frame are terminated on the 20 horizontals of these 20 junctor switches. The junctor switches are designated 0 to 9, left and right.

The system of trunk links that permits any trunk on the trunk link frame to be connected to any of the 200 junctors serving that frame is similar in principal to that used on the line link frames. The links from the left junctor switches are terminated on the verticals on the left half of the trunk switches while the links from the right set of junctor switches are terminated on the verticals on the right half of the trunk switches.

Each line link frame has 100 junctor terminations which are used to connect to the trunk link frames in the office. Since each trunk link frame has 200 junctor terminations for connecting to the line link frames, the ratio of line link frames to trunk link frames in an office is generally 2 to 1. There are no half frames. In an office with 13 line link frames for example there would be seven trunk link frames.

The 100 junctors from each line link frame are divided into approximately equal groups, with one group going to each trunk link frame. The number of junctors in a group depends on the number of trunk link frames in the office. However, there will always be a minimum junctor group size of ten junctors for access from one line link frame to any particular trunk link frame.

When there are ten or fewer trunk link frames in an office, each junctor group has ten or more junctors. For example, in an office with eight trunk link frames and 16 line link frames, each junctor group contains either 12 or 13 junctors. Figure 8-6 illustrates the junctor distribution for two trunk link frames and four line link frames.

[1] The 160 trunk capacity is for two-wire trunks; however, when four-wire trunks are required, a 200 trunk capacity arrangement is used consisting of a basic 100 trunk frame and a 100 trunk buildout frame.

TCI Library: www.telephonecollectors.info

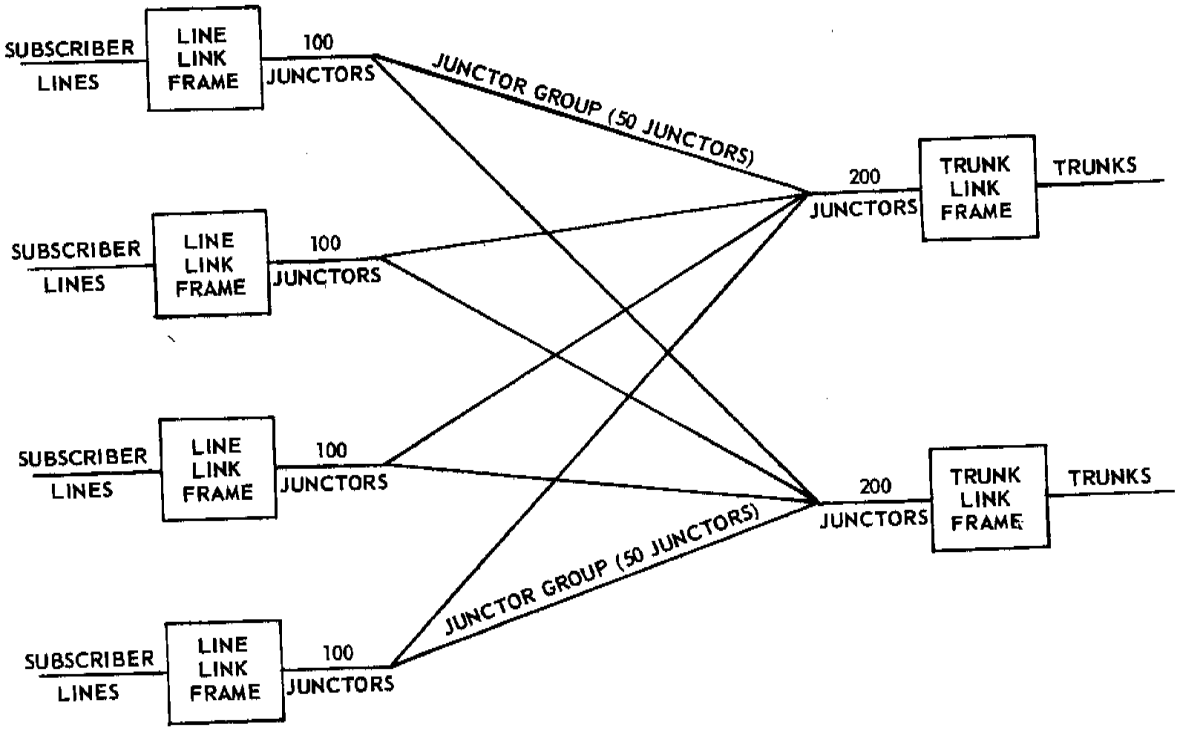

Figure 8-6 Junctor Distribution (4 Line Link and 2 Trunk Link Frame)

However, in an office with 11 to 20 trunk link frames, each junctor from the line link frames are multipled to two trunk link frames in order to have at least ten junctors per group. In order to accommodate the two appearances on the trunk link frames it is necessary to provide additional junctor switches, for the trunk link frames. These additional switches are mounted on the extension trunk link frame. In an office with 20 trunk link frames and 40 line link frames, each junctor group contains 10 junctors. Figure 8-7 illustrates the junctor distribution for 20 trunk link frames and 40 line link

TCI Library: www.telephonecollectors.info

frames. In this case, the number of junctors in a group is determined by dividing 100 by the number of pairs of trunk link frames. The maximum office size is 60 line link frames and 30 trunk link frames. In an office of this type the trunk link frames are furnished in groups of three.

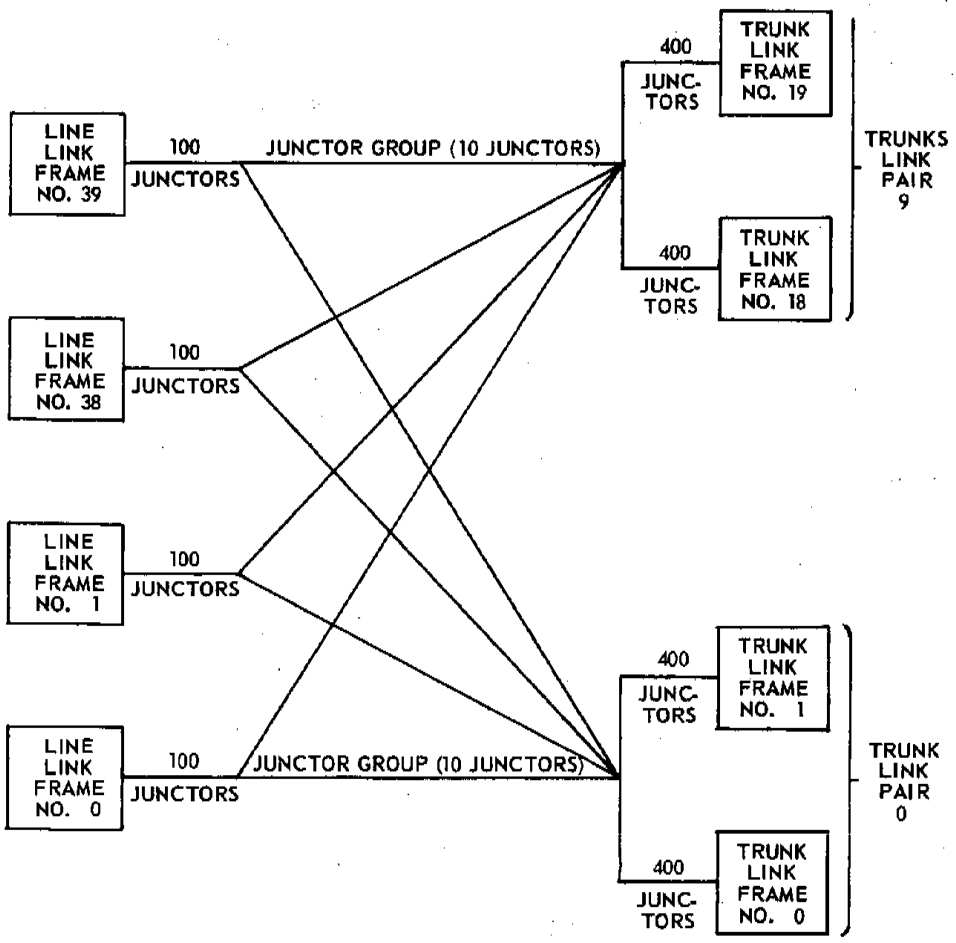

Figure 8-7 Pairing of Trunk Link Frame (40 Line Link and 20 Trunk Link Frames) Initial Installation.

C. EXTENSION TRUNK LINK

As stated previously, when 11 to 20 trunk link frames are involved, each junctor is multipled to two trunk link frames in order that each junctor group contain a minimum of ten junctors. This requirement reduces the junctor capacity of the basic trunk link frame by 50 per cent,

TCI Library: www.telephonecollectors.info

and it is therefore necessary to provide additional junctor switches for each trunk link frame in order to balance the traffic between junctors and links. These additional switches are mounted on the extension trunk link frames which, if possible, are located adjacent to the junctor switch bay of the trunk link frame. The extension frame consists of ten 200 point switches, the same as the junctor switches on the trunk link frame. These switches have their horizontals split and have a capacity for 200 junctors on the horizontal of the ten electrical switches. These 200 junctors and link terminations along with the 200 junctors on the trunk link frame provide a total of 400 junctors for the combination.

When an office has from 21 to 30 trunk link frames, two extension trunk link frames are associated with each trunk link frame; now by furnishing the trunk link frame in groups of three, there will be 600 links and 600 junctors per group. The 600 junctors from the ten groups of trunk link frames will accommodate the 6000 junctors from the 60 line link frames.

1. Channels

A channel is a combination of a line link, a junctor, and a trunk link that can be formed by crosspoint closures, into a transmission path that interconnects a line and a trunk. Each line link, junctor, and trunk link consists of a tip, ring, and sleeve lead with a switch appearance at each end.

The ten or more junctors in a group connecting a line link frame with a trunk link frame are distributed over the ten junctor switches of both the line link and trunk link frames, the junctor switch number being the same on both ends of each junctor. There are ten line links serving each particular subscriber line on the line link frame, and these are also distributed over the ten junctor switches. A typical channel for a 20 line link arrangement is shown in Figure 8-8. The line link to trunk link channel distribution is shown in Figure 8-9.

TCI Library: www.telephonecollectors.info

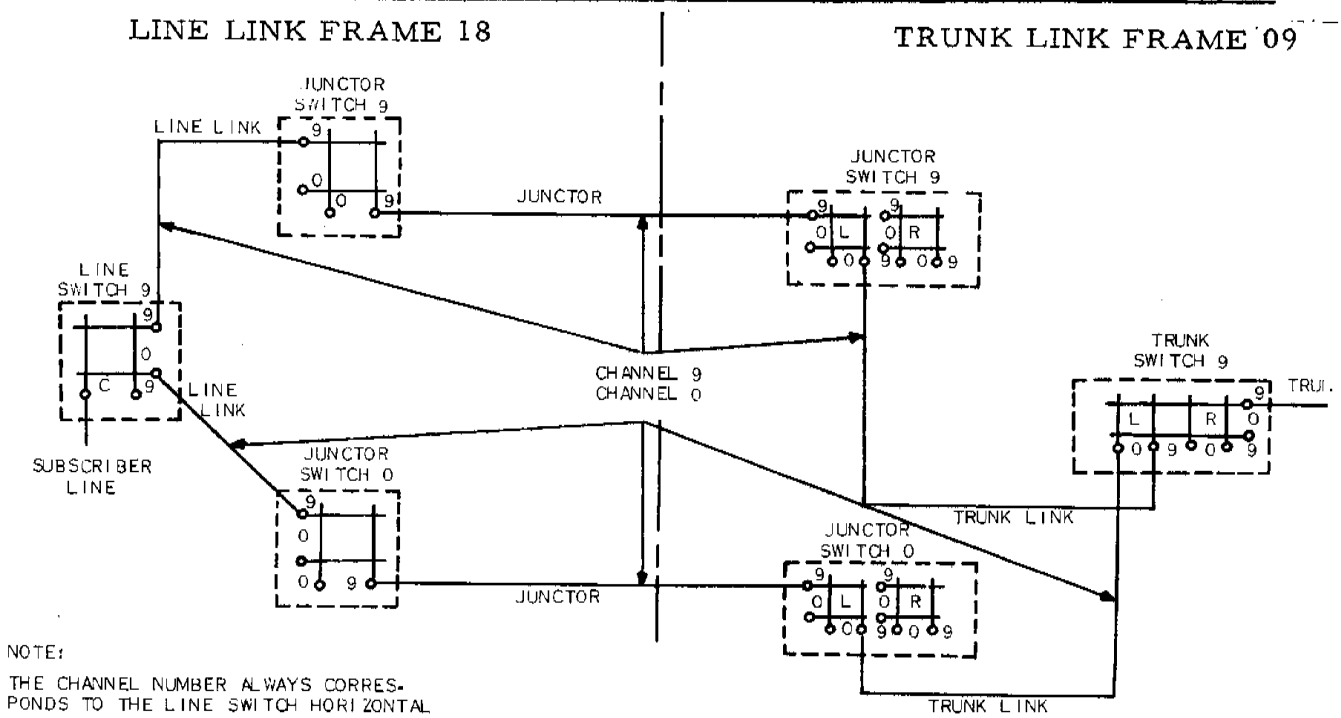

NOTE:

THE CHANNEL NUMBER ALWAYS CORRESPONDS TO THE LINE SWITCH HORIZONTAL NUMBER OF THE LINE LINK, THE TRUNK SWITCH VERTICAL NUMBER OF THE TRUNK LINK, AND THE JUNCTOR SWITCH NUMBER. ALL OTHER ELEMENTS ARE NUMBERED INDEPENDENTLY OF CHANNEL NUMBER CONSIDERATIONS.

Figure 8-8 Channels for 20 Line Link-10 Trunk Link Frames

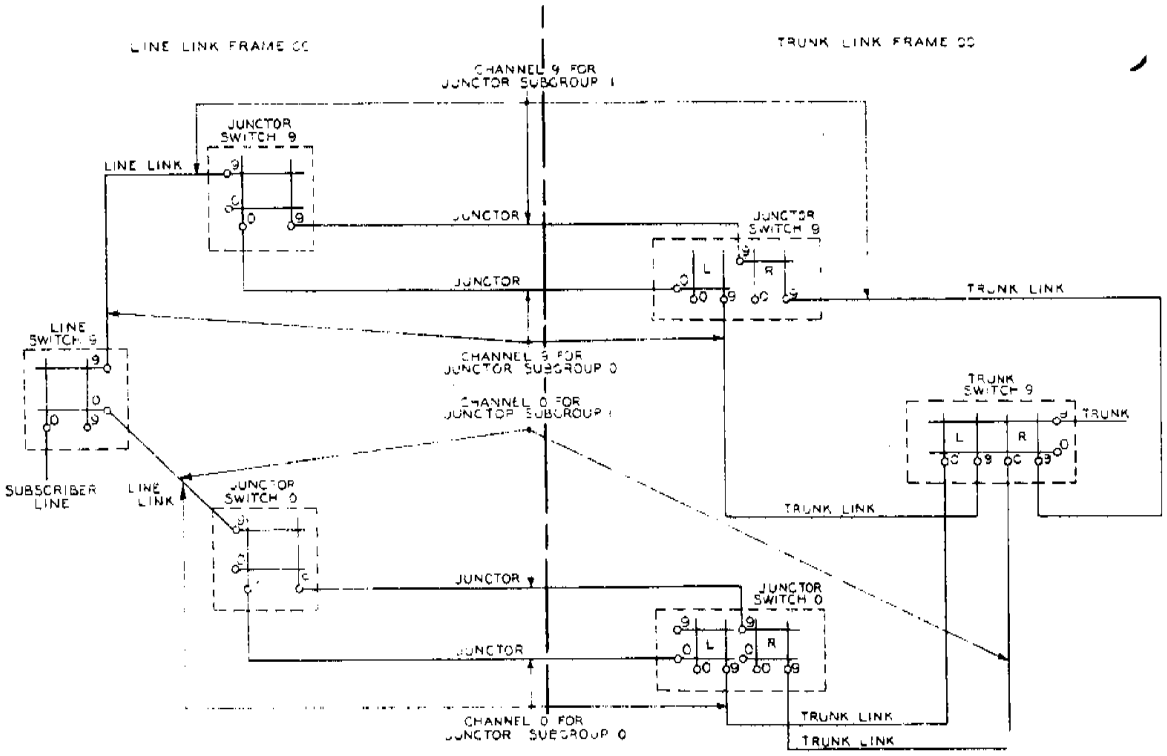

Figure 8-9 Channel Distribution -- Line Link to Trunk Link Frames

TCI Library: www.telephonecollectors.info

D. TRUNKS

The following is a list of principal categories of trunks. Many miscellaneous types are not listed.

(1) Intraoffice trunks handle traffic between customers served by the same marker group[1]. Each trunk requires two trunk link frame locations, an A appearance for the calling customer, and a B appearance for the called customer. These trunks are usually divided into three groups; message rate (AMA or message register), flat rate, and coin.

(2) Outgoing interlocal trunks are used to transmit calls outgoing from the No. 5 Crossbar office to a connecting office. The types of outgoing trunks used depend on the traffic in an individual office. Usually, there is one group of trunks for flat rate and message rate traffic and another for coin traffic.

(3) Incoming interlocal trunks carry the traffic incoming to a No. 5 office. There are two general types of these trunks, namely nontandem and tandem. The nontandem-type trunks carry only the calls completing to customers in the office, and these trunks have one location in the office. This location is on the trunk link frame. The tandem-type trunks carry calls completing to customers in the office and also calls which are switched through when the No. 5 office functions as a tandem switching point. Tandem trunks have two frame locations in the office, one on the line link frame for switching calls through, and the other on the trunk link frame for calls that terminate in the tandem office.

(4) Two-way interlocal trunks are provided on small trunk groups when it is uneconomical to use one-way trunk groups. The trunks are arranged for bylink operation with either loop or CX (E and M lead) signaling to SXS offices.

[1] A common group of markers which serve one or more central offices. A marker group is arranged to handle a maximum of six office code groups spread over six number series with a maximum of 40,000 numbers. The term marker group is also used to refer to the equipment served by a marker group.

TCI Library: www.telephonecollectors.info

(5) Intermarker group trunks handle traffic between two No. 5 Crossbar marker groups located in the same building. The following three types of trunks are used for this traffic.

(a) Customer to customer.

(b) Customer to trunk.

(c) Trunk to customer.

(6) Operator, special service, and recording completing trunks are used by DSA operators to handle assistance traffic. There are usually separate groups of trunks for various classes of service.

(7) Tone trunks are used to give line busy on intra-office call, overflow, (paths busy), partial dial, and vacant code tones. Again there may be coin and noncoin groups of these trunks.

(8) Common overflow trunks are provided as a final route when all permanent signal holding or non-coin combination tone trunks are busy or to return an announcement when dial tone delays are excessive under extreme conditions. This trunk returns a reorder (120 IPM) signal to a calling party.

(9) Intertoll trunks are used to switch toll calls between toll centers. These trunks are of three general types, as follows.

(a) One-Way Incoming Trunks: These have three frame locations in an office: two line link frame locations for calls switched through the No. 5 office as a toll center, and one trunk link frame location for calls terminating in the toll center.

(b) One-Way Outgoing Trunks: These have one trunk link frame location for calls outgoing from the No. 5 office as a toll center, and one jack location at the toll switchboard for operator-handled outgoing calls.

(c) Two-Way Trunks: These have all of the locations mentioned above.

TCI Library: www.telephonecollectors.info

Since interlocal and intertoll trunks employ different supervision and inpedance characteristics, one type may not be switched directly to the other type without conversion arrangements.

(10) Junctor Circuits: These circuits are combinations of outgoing and incoming trunks in the No. 5 office, permanently wired back-to-back, or their equivalent in design. Their functions are as follows:

(a) Operator Junctor: This circuit functions to complete calls on a tandem basis from a switchboard located in the same building as the No. 5 switches to customers located in other local offices.

(b) Operator Toll Junctor: The functions of this circuit are similar to those of the operator junctor, except that the trunks involved are of the intertoll type.

(c) Coin Junctor: This circuit functions to provide for coin operation (coin collect, coin return, coin test, etc.) for local coin calls to be routed over outgoing trunks not arranged for each coin service.

(d) Coin Zone Junctor: Besides being capable of performing the functions of a coin junctor, this circuit is arranged to call in an operator for the initial and overtime charges for coin zone customer-dialed calls.

(e) Message Register Junctor: This circuit functions to provide message register charging facilities for customer calls to be routed over trunks not arranged for message register service.

(f) AMA Junctor: This circuit functions to provide AMA charging facilities for customer calls to be routed over trunks not arranged for AMA service.

TCI Library: www.telephonecollectors.info

(11) Coin Supervisory Circuits

Coin supervisory circuits handle all the coin operations except those taken care of by the originating register. In operation, when required, one of these circuits is connected to a trunk that is serving a coin call. The duties of this circuit are to collect the coins at the end of a completed call for which a charge is made, and to effect coin return when the call is not completed or is one for which no charge is made.

In offices with coin overtime, this circuit makes coin test and collects the coin for the initial and subsequent periods. If a deposit is not made for an overtime period, the circuit signals for an operator to come in on the connection.

E. COIN SUPERVISORY LINKS

These links connect coin trunks to coin supervisory circuits. The frame is similar to the incoming register link frame, and the circuit arrangements are the same. However, because the holding times of coin supervisory circuits with coin trunks are very short, a group of ten coin supervisory circuits can serve as many as 480 trunks.

F. MESSAGE REGISTER

Calls involving one message unit may be recorded by AMA equipment or on message registers.

Message registration is accomplished over a single-sleeve lead which permits line link frames with 3-wire switches to serve all classes of lines. The message register service charging arrangement involves a cold-cathode vacuum tube. Selective operation of either a tip-party or a ring-party register on 2-party lines is obtained.

A distinguishing feature of the switching train is that, unlike other local systems, supervisory and charging circuits are not an integral part of the switching train, as in the case of the panel district selector or the No. 1 Crossbar district junctor circuit. The supervisory and charge features are functions of the various trunk

TCI Library: www.telephonecollectors.info

circuits which connect to the trunk levels of the trunk link frames. By this arrangement trunks may be provided in type and quantity as dictated by the requirements of a particular telephone company.

8.3 CONTROL EQUIPMENT

A. MARKERS

The marker is the most active piece of common control equipment in the office. It is used one or more times in the completion of every call. Different offices have various numbers of markers depending on the size of the office and the amount of traffic. All the markers and their associated equipment serve up to a maximum of 40,000 numbers, make up a marker group.

There are three types of markers: (a) combined (manfacture discontinued), (b) dial tone, and (c) completing. The combined marker performs all the marker jobs while the dial tone and completing markers divide the jobs of the combined marker between them.

The dial tone marker, as the name implies, is used exclusively on dial tone connections while the completing marker performs all the other marker jobs. Economic and traffic conditions determined whether an office had a single group of combined markers or a subgroup of dial tone and a subgroup of completing markers. In general, the combined marker proved more economical only for very small installations, such as those requiring three or less markers. Small installations now use an Originating Line Identifier Unit and its associated completing marker for establishing the dial tone connection.

Each marker normally completes each of its various functions in less than one second; therefore, a small number of markers can serve a large office.

The principal functions of the dial tone marker are:

(a) To respond to demands for dial tone by determining the location of the calling line on the line link frame.

(b) To establish a connection between the calling line and an originating register.

TCI Library: www.telephonecollectors.info

(c) To transfer the calling line location and customer class-of-service information to the originating register. (The register stores this information and after dialing is completed, passes it to a completing marker for use in routing and recording the call.)

The principal functions of the completing marker are as follows:

(a) To determine the proper route for the call from the area or office code digits of the called number and the class of service of the calling customer.

(b) To establish the connection from a calling customer to a trunk or from a trunk to a called customer.

(c) To connect to the proper number group to determine the location of the called line on the line link frame.

(d) To determine from the class of service and the destination the proper charge condition for the call.

(e) When outgoing pulsing is required, to select an outgoing sender of the proper type. The marker then passes information to the sender which the sender transmits when the connecting office equipment is ready.

(f) To recognize line busy, vacant numbers, and intercept conditions, and to control hunting operation in terminal hunting groups.

(g) To complete a call regardless of certain trouble conditions.

(h) To call in the trouble recorder which makes a record of the marker progress if its operation is abnormally delayed or if certain trouble conditions are encountered.

TCI Library: www.telephonecollectors.info

Special Features in the Marker

Two markers (0 and 1) in a group of combined or completing markers are usually equipped with special features for handling certain test calls. These calls are set up by operators, testmen, or maintenance men and are of the following types:

a. No-test calls originated at the test desk or a DSA switchboard.

b. No-hunt calls originated at the outgoing trunk test frame or the message register rack.

c. Special hunt test calls originated at the local test desk.

B. ORIGINATING REGISTERS

Originating registers furnish dial tone to subscribers and record the digits that are dialed. After dialing is completed, the called number is transmitted from the register to the marker. These registers also make party test to determine whether a tip or ring party is making the call. Originating registers appear on trunk link frames and are connected to the subscriber's line by the combined or dial tone marker when the customer lifts the receiver off the hook. A No. 5 Crossbar office which includes any coin lines must have all the originating registers in the office arranged for coin operation.

C. PRETRANSLATORS

Pretranslator circuits may be provided in offices located in areas where some calls require the dialing of more digits than others. The originating register circuit may be arranged to seize the pretranslator after either the second or third digit has been dialed. From these digits, the pretranslator determines how many more digits the register should expect before seizing a marker.

When the volume of calls of this nature is not great and the numbering plan is not too complex, pretranslation can take place in the originating register. The register can be arranged to determine how many digits it should receive from the first digit or from a limited combination of the first and second digits.

TCI Library: www.telephonecollectors.info

On calls to stations where a party letter is part of the directory number, the register has to wait for an extra digit. This situation is known as stations delay. The pretranslator recognizes stations delay from the dialed code and informs the register to wait for a possible additional digit. If the No. 5 office handled FACD (Foreign Area Customer Dialing) traffic, pretranslators are always required.

D. NUMBER GROUPS

The number group translates subscriber directory numbers into line equipment locations of subscriber lines. (The line equipment location identifies the line link frame location of a subscriber line.) The number group also supplies the proper ringing control information and other information concerning the called number, such as whether it is in a terminal hunting group or in a physical, theoretical or extra theoretical office.

A number group serves 1000 consecutive directory numbers. For example, one number group will serve directory numbers 2000 to 2999.

The number group is also used on tandem or toll through-switched calls. On these calls the number group supplies the marker with the line link location of the trunk seeking a path through the office. Each trunk requires two appearances in the number groups. Each trunk uses the same hundreds, tens and units numericals in each of the two number groups assigned to trunk numbers.

E. OUTGOING SENDERS

An outgoing sender is employed on all calls requiring pulsing to connecting offices. The marker transfers the required digits of the called number to a sender which is connected to an outgoing trunk. (The function of the sender is to furnish the pulses which control the operation of the switching equipment in the connecting office.) The type of connecting office (step-by-step, panel, manual, or crossbar) determines what kind of sender should be used to transmit the called number. Therefore, four different types of outgoing senders are provided in a No. 5 Crossbar office, as listed below:

a. Dial Pulse (DP)

b. Multifrequency (MF)

TCI Library: www.telephonecollectors.info

c. Revertive pulse (RP)

d. Panel call indicator (PCI)

e. Frequency Shift Pulse (FSP)

F. INTERMARKER GROUP SENDERS

The intermarker group sender is used for traffic between two different No. 5 Crossbar marker groups housed in the same building. It serves in two capacities; as an outgoing sender for the calling marker and as an incoming register for the called marker. These senders transfer information from one marker group to the other by means of connectors rather than by pulsing.

G. OUTGOING SENDER LINKS

Outgoing sender links connect outgoing and intermarker group senders to outgoing trunks. Information from a sender to a trunk is transmitted through this sender link.

One sender link frame mounts ten 200 point crossbar switches. All types of senders may be located on one sender link frame. The senders connect to horizontals, the trunks to verticals of the switches. Control is by the markers.

H. INCOMING REGISTERS

Incoming registers record the pulses on calls received over incoming trunks from operators or connecting offices. Since these pulses are incoming from various types of offices, the following different incoming registers are provided to record them:

a. Dial pulse (DP)

b. Multifrequency (MF)

c. Revertive pulse (RP)

I. INCOMING REGISTER LINKS

The incoming register links connect incoming trunks to incoming registers. This connection is made without the use of a marker. Information from incoming trunks to incoming registers is transmitted through these links.

TCI Library: www.telephonecollectors.info

The link frames use 200 point crossbar switches to connect a maximum of ten incoming registers of one type to trunks connected to verticals of the switches. The number of trunks served by a group of ten registers can be increased by associating several frames into a "link group."

Cross-connections associated with the individual trunks advise the selected register of the trunk's class and trunk link frame number. If the trunk is used for through switching, a trunk number will also be derived in the register. These facts about the trunk will be given to the marker to enable it to set up the call.

When the incoming register link frame handles calls dialed directly by subscribers in step-by-step offices, the connection from the trunk to the register through the crossbar switch may not be closed when pulsing of the first digit starts. For this type of call an early "by-link" path is provided through trunk and register preference relays to start registration of the first digit before closure of the final pulsing path through the link switch.

J. CONNECTORS

A connector is a relay-type switching device for interconnecting, for a short interval of time, two equipment elements by a relatively large number of leads.

A specific method is used in naming these connectors. If more than one type of equipment can originate action toward another type, the connector is named according to both the originating and terminating action; for example, in connectors such as the line link marker connector with the word "marker" in the title, the action terminates in the marker and is originated by the line link frame. The originating circuit must be mentioned because other circuits can originate action toward the marker. Other connectors of this class are the originating register marker connector and the incoming register marker connector. Eight principal types of connectors are shown in Figure 8-10.

Similarly, when only one type of equipment can originate action toward another type, the connector is named according to where the connector action terminates.

TCI Library: www.telephonecollectors.info

For this reason the connectors from markers to other frames do not contain the word "marker" in the title. Connectors in this class are the line link, trunk link, number group, and outsender connectors.

K. FOREIGN AREA TRANSLATORS

A foreign area translator frame and associated connectors contain circuits which operate in conjunction with the markers to permit routing calls to other national numbering areas if there is more than one trunk route available to the numbering area. Arrangements are provided for translation into a maximum of six foreign areas.

Where only one route is available to each numbering area, or one combined route is available for a number of areas, the marker can route calls to them without using the foreign area translator. However, if different AMA charge treatment is required for two or more destination codes reached over a single route to a foreign area, the foreign area translator will be required.

8.4 SYSTEM MAINTENANCE

The basic provisions for the maintenance of No. 5 Crossbar system offices consist of:

(a) Testing equipment for the various circuits and associated apparatus.

(b) Arrangements for providing evidence and information about failures occurring on service and test calls.

(c) Provisions for removing equipment from service.

The master test frame which incorporates all of the above features is located in the maintenance center. Included in the apparatus of this frame is a recording device which automatically provides, in the form of punched cards, both information concerning failures or service calls and the results of certain test calls.

Some of the other testing equipments used include:

(a) Test lines for use in making tests of the operating and signaling features of local and intertoll trunk circuits.

TCI Library: www.telephonecollectors.info

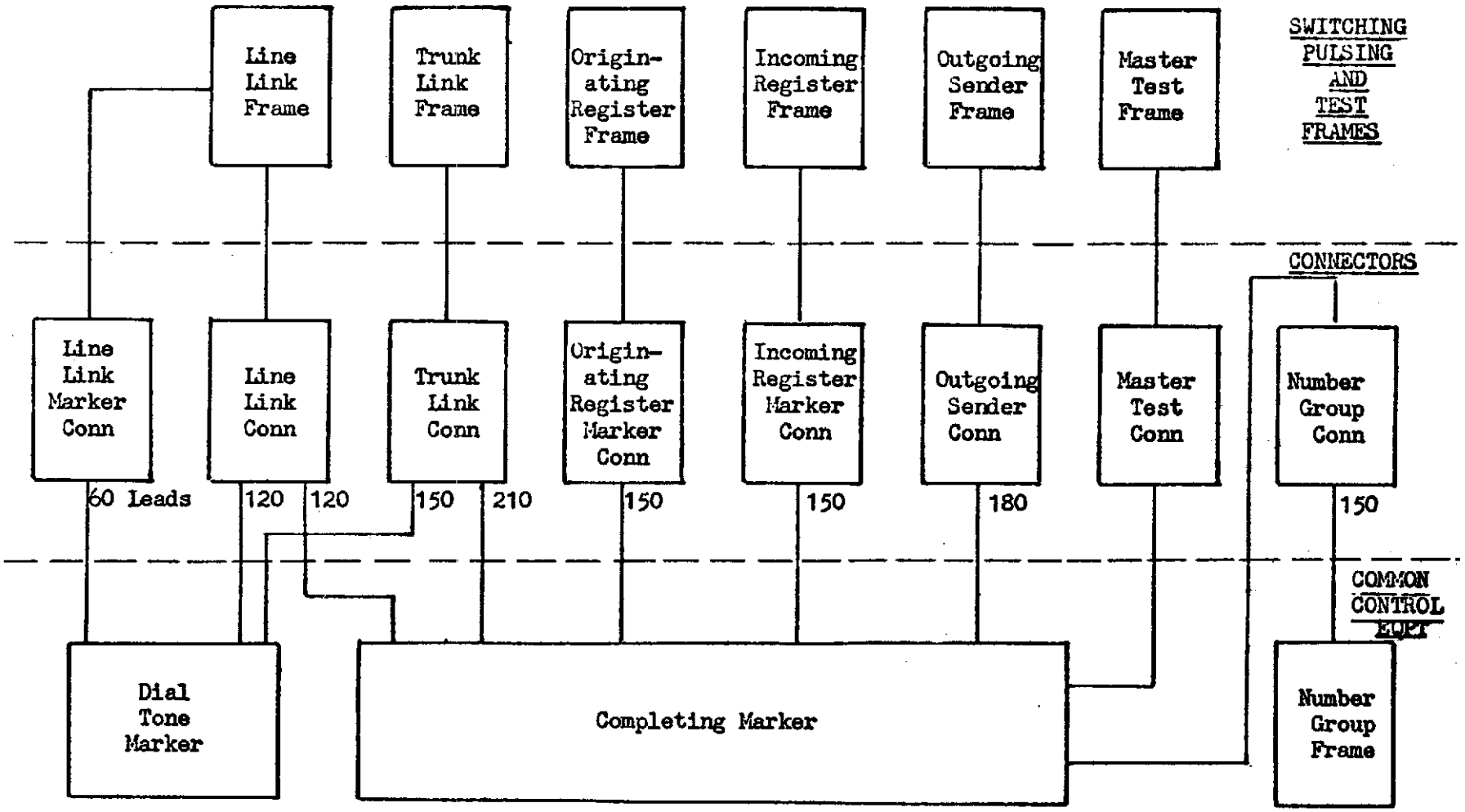

Figure 8.10 The Eight Principal Types of Connectors Used in the No. 5 Crossbar System

TCI Library: www.telephonecollectors.info

(b) Test circuits for checking foreign area translator code cross connections.

(c) Equipment for automatically testing intraoffice type trunks, customer to customer intermarker group type trunks, and outgoing interoffice type trunks.

(d) Several portable test sets.

An alarm system giving audible and visual signals is provided to alert the central office force of the occurrence of trouble conditions and to direct them to the proper location. The direction is accomplished by a pilot lamp indicating the floor involved and the pilot lamps at main aisles and cross aisles.

8.5 NO. 5 CROSSBAR SYSTEM SWITCHING TELEPHONE CALLS

The calls handled by a No. 5 Crossbar office are of four general types: intraoffice, outgoing, incoming and tandem or through switched.

All calls require the use of a register for counting and storing digit information. Originating registers are used to count and store digits from subscribers while incoming registers count and store digits from other offices.

A. DIAL TONE CONNECTION

The originating registers are assigned to the trunk switches of the trunk link frames. A connection from the subscriber lines to the originating registers requires the selection and closure of a channel. A marker is required for the channel selection as well as register selection and calling line identification.

See Figure 8-11 for the block diagram showing the sequence of connection for the dial tone job. When a subscriber removes the receiver from the switch hook, a line relay is operated which causes the line link frame to inform the line link marker connector that a marker is required. The line link marker connector selects an idle dial tone or combined marker, connection #1.

TCI Library: www.telephonecollectors.info

In order to establish a dialing connection between the subscriber's line and an idle originating register, the marker must determine the equipment location of the calling line, select an idle register and then determine that a channel between the line and the register can be obtained.

The marker tests for the calling line location through the connection set up by the line link marker connector. While the marker is recording this information, it is also selecting an originating register, connection #2. The originating registers are distributed as evenly as possible over all the trunk link frames. The selection of an idle originating register is a two-step operation. The first step consists of the marker selecting an idle trunk link frame that has an appearance of one or more idle originating registers. The second step is the selection of a particular register on the selected trunk link frame.

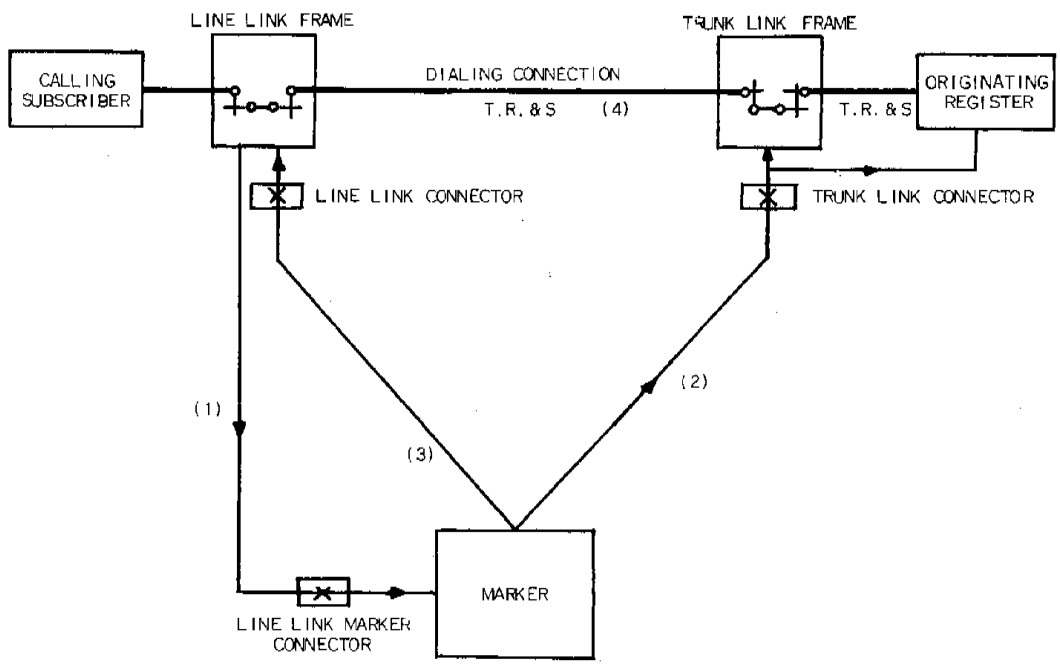

Figure 8-11 Establishing Dialing Connection

After the marker has selected the trunk link frame, the marker then returns to the line link frame via the line link connector, connection #3. Through this connection, the

TCI Library: www.telephonecollectors.info

marker will be able to complete the subscriber line identification and also control the closing of the contacts on the crossbar switches, for the selected channel.

The marker must select an idle channel between the subscriber's line and the selected originating register. When the marker finds an idle channel, it operates the select and hold magnet required for channel closure. The marker indicates to the originating register the identity of the line link used in the channel, the equipment location, and class of service of the calling line. The register stores this information for later use.

Before the marker transfers control of the channel to the originating register, it checks the connection for continuity, crosses or false grounds. The marker, upon satisfying itself that it has established a valid connection, releases its associated connectors and itself leaving the control of the channel with the originating register. The register furnishes dial tone to the subscriber and is now ready to receive the digit information from the subscriber's set.

This completes the dial tone connection. The digits which the subscriber dials or keys into the originating register are stored in the register for later marker use. As soon as dialing is completed, the register will seize a completing marker and transmit to it all registered information. This information consists basically of (a) class of service of the calling subscriber, (b) line link location of the calling subscriber and party identification, and (c) dialed digits.

The preceding operation is standard regardless of the type of call being initiated. Since the originating register initiates action to obtain a completing marker at completion of dialing it must be able to determine how many digits are to be dialed for each call. While most calls will consist of seven digits: three for an office code identification and four numericals, the register may be required to complete calls on the basis of 3 to 11 digits.

In order to determine the number of digits to be received on each individual call, a pretranslation of the dialed information is performed. Pretranslation is the process of determining from the first 1, 2, or 3 dialed digits, how many digits the register should expect to receive on that particular call. When the number of calls

TCI Library: www.telephonecollectors.info

that differ from the normal seven digits is small and the numbering plan is not too complex, pretranslation can take place in the originating register. For more complex numbering plans, or a large volume of calls using a variable number of digits, a separate pretranslator is provided. This circuit is called in by the originating register through the pretranslator connector after the first two or three digits have been set in the register. The pretranslator determines from these digits how many digits should be dialed and tells the register the number of digits that it should receive before calling in the completing marker.

B. OUTGOING CALL (INTEROFFICE)

Outgoing calls are established to connecting offices or to operators for some type of service assistance. It is necessary to establish a connection from the subscriber's line to one of the outgoing trunks that terminate in the connecting office or operator's position. It may also be necessary to determine what, if any, charge is to be made and how to send the digits of the called number to the connecting office. Figure 8-12 shows the sequence of connections for an outgoing call.

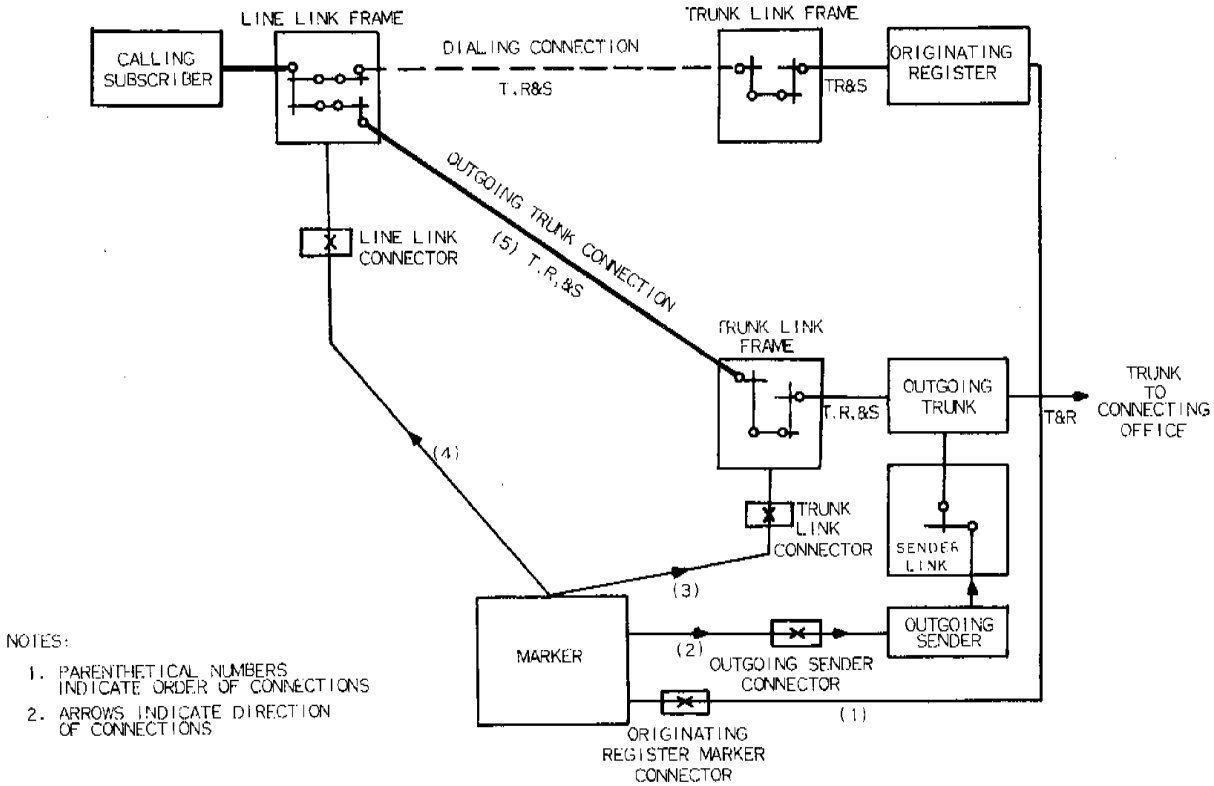

Figure 8-12 Outgoing Trunk Connection

TCI Library: www.telephonecollectors.info

After the originating register has recorded the proper number of digits, it signals its originating register marker connector that a completing marker is required. The originating register marker connector selects an idle completing marker and establishes a connection from the originating register to the marker (Connection #1). The originating register then transmits to the completing marker all of the stored information; class of service, line link location, party identification, channel number and digit information.

The marker obtains routing instructions from a route relay which is operated by relating the called office code to the calling subscriber's class of service. This route relay will instruct the marker as to what type of pulsing to use and which group of outgoing trunks are going to the proper termination. The marker then proceeds to test for and select an idle outgoing sender of the proper type (Connection #2). Once the marker has determined the availability of an outgoing sender, it then proceeds to test the office for location of idle outgoing trunks and idle trunk link frames serving those idle outgoing trunks. The marker then selects a particular outgoing trunk and trunk link frame to serve this call using the same technique as in the selection of an idle originating register (Connection #3). It then causes the sender link frame to set up a connection between the outgoing trunk and the outgoing sender. While this connection is being completed, the marker seizes the line link connector associated with the subscriber's line link frame (Connection #4). Information as to the equipment location of the calling subscriber was obtained from the originating register. The marker now tests for and selects an idle channel from the calling subscriber to the outgoing trunk. When the marker finds an idle channel, it operates a select and hold magnet required to close through the channel; testing the channel for validity. The marker then tests for continuity before transferring control to the outgoing sender (Connection #5).

While the marker was setting these latter connections, it was instructing the outgoing sender on how to handle this particular call. It informed the outgoing sender of the digits dialed, which digits if any are to be deleted, what digits, if any, to prefix, and the type of test or supervisory signals required by the connecting trunks. The marker then releases its associated connectors and itself, leaving the outgoing sender in charge of the call. The outgoing sender will test and outpulse to the terminating office in accordance with the class instructions it received from the marker.

TCI Library: www.telephonecollectors.info

C. INCOMING CALL

An incoming call is the completion, in a called office, of an outgoing call from a connecting office. In the called office, the trunk from the originating office is termed an incoming trunk. The incoming connection consists of a channel between the incoming trunk and the called subscriber. Refer to Figure 8-13 for the block diagram showing the sequence of connections for an incoming call.

As soon as the incoming trunk is activated by a call originating in a connecting office, it seizes an incoming register through an incoming register link, connection #1. As soon as the incoming register has been seized, it signals the connecting office that it is connected to the trunk and ready to receive digit information. As soon as the register has received the proper number of digits, it signals the incoming register marker connector that a connection to a completing marker is required, connection #2. The incoming register marker connector selects an idle completing marker and establishes a connection from the incoming register to that marker. The incoming register then transfers information from its memory circuit to the completing marker. This information consists of the dialed digits, the class of the incoming trunk, and the trunk link frame number on which this trunk is assigned.

The marker first seizes the connector of the trunk link frame associated with the incoming trunk, connection #3. From the trunk class indication and the digits received, the marker selects the number group frame in which the called number is assigned, connection #4. As soon as the connection is established the marker transfers the hundreds, tens, and unit digits information into the number group. The number group translates and returns to the marker information concerning the line link equipment location of the called subscriber, the type of ringing that will be required for this subscriber along with other information for the marker to establish the validity of the call.

The marker then seizes the connector associated with the called subscriber's line link frame, connection #5, and proceeds to test for and select an idle channel from the incoming trunk to the called subscriber. When this channel has been selected, closed, and tested, connection #6, it transfers control of the channel and of the call to the

TCI Library: www.telephonecollectors.info

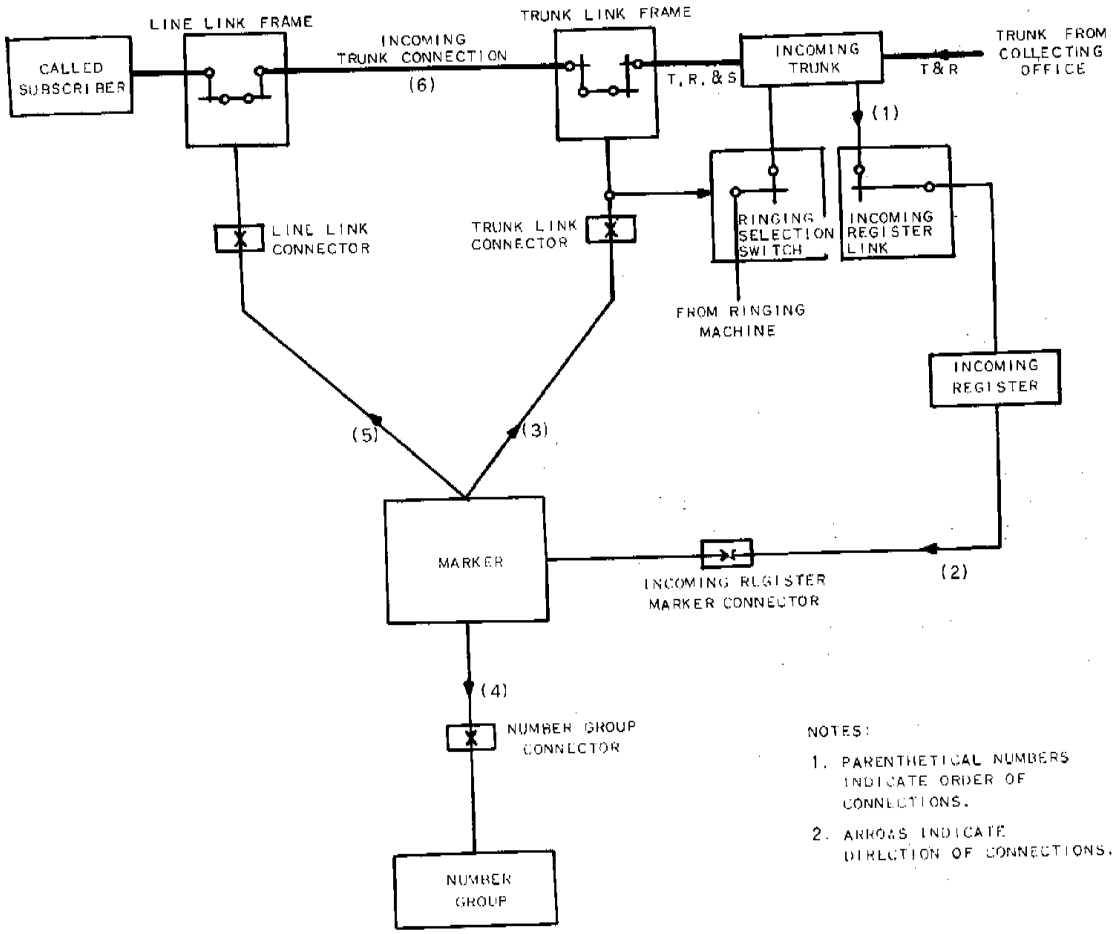

Figure 8-13 Incoming Trunk Connection

incoming trunk. The marker sets the ringing selection switch with the proper type of ringing for the called subscriber. The marker upon having completed its useful functions, releases itself and all control equipment leaving the path from the incoming trunk to the called subscriber under control of the trunk which will apply ringing tone to the called line.

TCI Library: www.telephonecollectors.info

D. INTRAOFFICE CALL

An intraoffice call is one that is placed from one subscriber to another subscriber within the same marker group. Since a channel can only be established between a line link termination and a trunk link termination, it will be necessary to establish two channels through the office. The trunk used for this purpose must have two trunk link appearances in order to terminate and form a loop around for the two channel connections; refer to Figure 8-14 for the block diagram showing the sequence of connections for an intraoffice call.

This call starts in the same manner as the outgoing trunk connection in that the originating register upon receipt of the proper number of digits, signals the originating register marker connector for a connection to a completing marker, connection #1. The information stored in the originating register is then transferred to the marker over this connection.

The marker upon examining the office code and subscriber's class of service for route relay operation, which will provide the marker with routing instructions, finds that the office code represents a call to its own equipment. The routing instruction gives the marker the location of the intraoffice trunks to be used for this call. It proceeds to test and select an idle intraoffice trunk on one of the idle trunk link frames, connection #2.

The marker then by using the office code and the thousands digits selects the proper number group and receives from the number group the line link location of the ringing combination of the called subscriber, connection #3. The marker then seizes the line link frame of the called subscriber by seizing the proper line link connector, connection #4, tests and selects a channel from the called subscriber to the B-appearance of the intraoffice trunk and sets the ringing selection switch for the proper type of ringing, connection #5.

The marker then proceeds to seize the line link frame of the calling subscriber, connection #6, testing for and selecting an idle channel from the calling subscriber to the A-appearance of the intraoffice trunk on the trunk link frame, connection #7. All required connections having now been established, the marker releases itself and all control circuits leaving the trunk in charge of the connection to the office.

TCI Library: www.telephonecollectors.info

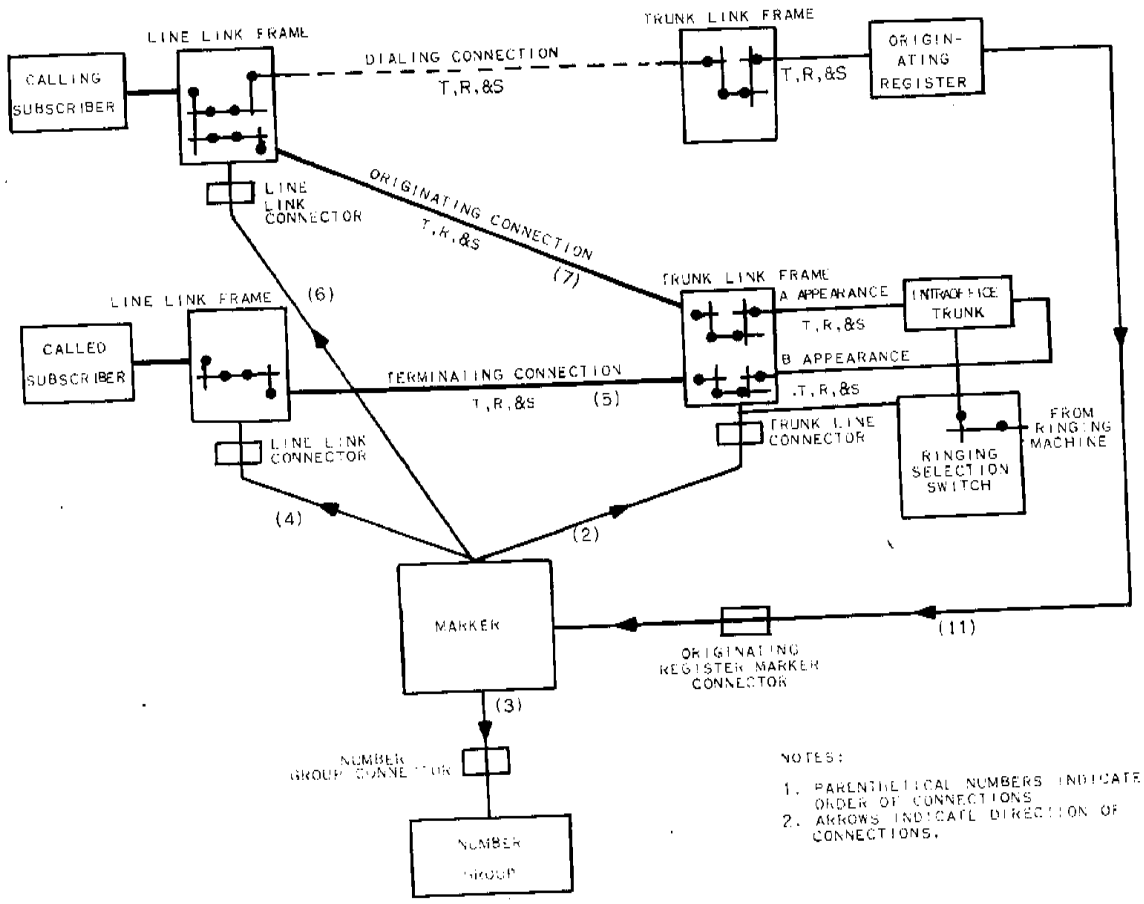

Figure 8-14 Intraoffice Trunk Connection

8.6 TANDEM OR TOLL THROUGH SWITCH CALL

Since it is not economical to have direct trunks between all central offices, intermediate switching points are provided to handle traffic between offices that have no direct connection. This type of operation is known as tandem or through switching. A local No. 5 Crossbar office may be arranged to serve tandem as well as toll center traffic for surrounding offices.

TCI Library: www.telephonecollectors.info

A No. 5 Crossbar office can be used to provide this tandem switching service in addition to its regular functions. An incoming trunk arranged for handling tandem traffic at a No. 5 Crossbar office with tandem switching features can also handle traffic for completion to this office, since it is generally economical to combine these two types of traffic over the same trunk group. To permit this dual use, it is necessary to provide such trunks with both trunk link and line link frame locations in the No. 5 office with tandem switching features. The trunk link frame location is used when a call coming in on a tandem trunk terminates in the No. 5 Crossbar office. When the incoming call is to be switched to a connecting office through the No. 5 Crossbar office, the line link frame location is used.

Figure 8-15 is the block diagram showing the sequence of a call through an office arranged for through switching. An incoming trunk is seized at the connecting office and in a manner similar to a regular incoming call. It, in turn, seizes the incoming register (Connection #1). Digit information is stored in the register as in other incoming calls. At completion of dialing the register seizes a marker and transfers all of the stored information to the marker in conventional fashion (Connection #2). The additional information that is transferred in this type of call are the three digits that represent the trunk identification. The marker upon looking at the office code and the class of the incoming trunk will go through route relay operation which will identify this call as a tandem type of call. The marker will then test for and select an idle outgoing sender (Connection #3). The next action by the marker is to test and select an outgoing trunk to the proper termination, (Connection #4), and establish the connection from the outgoing trunk to the outgoing sender through the outgoing sender link frame. Using the three digits of the trunk number, the marker seizes the number group frame assigned to trunk numbers (Connection #5), and receives from it the line link location of the incoming trunk. This location is always furnished in duplicate, in two separate number groups. To increase the possibility of completing a toll call, the trunk is assigned two separate line link locations. Each of the two number group locations of the toll trunk will translate one of the line link locations. If a marker has trouble in establishing a connection on its retrial, it will go to the other number group and thereby obtain the other line link location of this trunk. The tandem trunks have an identical line link location in both number groups.

TCI Library: www.telephonecollectors.info

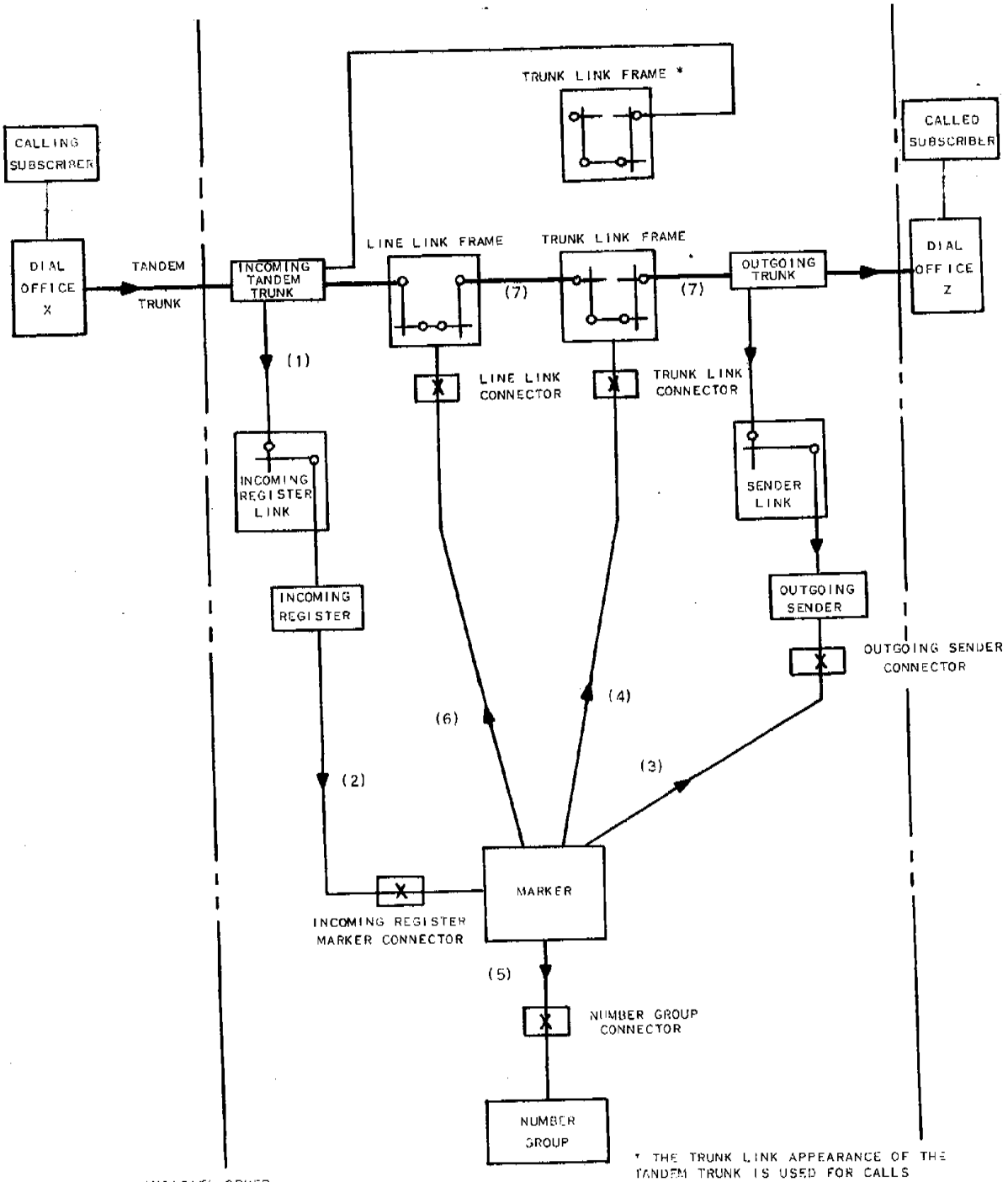

NOTES:
1 PARENTHETICAL NUMBERS INDICATE ORDER OF CONNECTIONS

2 ARROWS INDICATE DIRECTION OF CONNECTIONS

* THE TRUNK LINK APPEARANCE OF THE TANDEM TRUNK IS USED FOR CALLS TERMINATING IN THIS NO 5 CROSSBAR OFFICE.

Figure 8-15 Tandem or Through Switched Call

TCI Library: www.telephonecollectors.info

The marker now seizes the line link frame on which the incoming trunk is assigned as shown in connection #6. The marker now tests for and selects a channel in conventional manner from the incoming trunk assignment on the line link frame to the outgoing trunk assignment. Upon completing test of this channel and transfer of outpulsing information to the outgoing sender, the marker releases itself and all of its connectors; the call now proceeds the same as an outgoing call.

8.7 OTHER TYPES OF CALLS

With slight modifications in the techniques of handling calls, No. 5 Crossbar is able to perform many other useful types of call switching. Many of the functions performed in these calls are identical to the functions relating to the previously described calls.

A. REVERTING CALL

A reverting call is one that takes place between subscribers who share the same party line. A connection is set up to a reverting trunk for provision of talking battery and supervisory functions.

This call is very similar to an intraoffice trunk connection except that a trunk with only one trunk link appearance is required and only one channel is set up from the one line serving both parties, to the reverting trunk. The block schematic for this type of call is shown in Figure 8-16 and differs only slightly from Figure 8-14. After the marker has received the line link location of the called subscriber from the number group frame and it finds that this location matches the location of the calling subscriber, as given to it by the originating register, the marker then releases, connection #2 and proceeds to go through the trunk selection the second time; this time selecting an idle reverting trunk. After the marker seizes the line link frame and tests for and closes a channel in the usual manner, it releases itself and its connectors leaving the reverting trunk in charge of the call.

The operating procedure when multiparty lines are furnished is for a steady tone to be returned to the calling subscriber. This is the signal to the calling subscriber to dial the party code digit numerical that appears on his dial. Upon receiving this one-digit information, the reverting trunk now returns busy tone and sets up a ringing

TCI Library: www.telephonecollectors.info

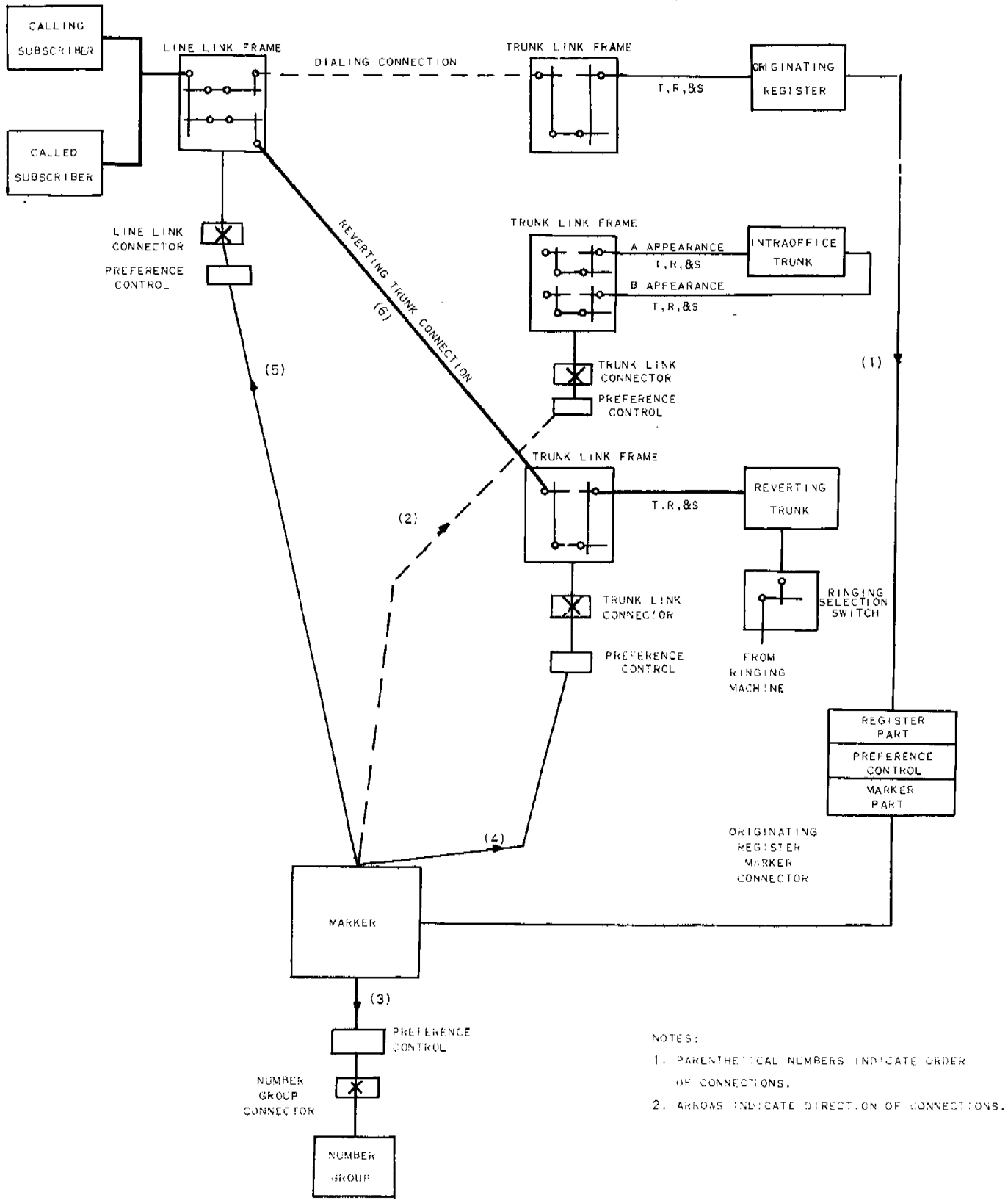

Figure 8-16 Reverting Trunk Connection

TCI Library: www.telephonecollectors.info

selection switch for the calling subscribers ringing code. The subscriber hangs up and the trunk will alternately ring the called and calling subscribers lines, tripping the ringing as soon as the receiver has been lifted at the called subscribers line.

B. INTERMARKER GROUP OPERATION

Intermarker group operation is where a call is completed from one marker group to another marker group within the same building. This call may be from a subscriber, from a subscriber to a trunk or from a trunk to a subscriber. For illustration we will use a call from a subscriber to a trunk. The block schematic for this call is shown in Figure 8-17.

By inspection of Figure 8-17 we will see that each intermarker group trunk appears in one marker group as an outgoing trunk and in the other marker group as an incoming tandem type of trunk, except for assignment to the incoming register link frame. This call differs from a regular outgoing or tandem call in the fact that the outgoing sender is replaced by an intermarker group sender which is assigned in the first marker group as an outgoing sender and used in the second marker group as an incoming register. With the intermarker group sender connected in this manner, it is not necessary to actually outpulse and again receive the pulsed digit information. It will simply take the information it receives from the completing marker and through the incoming register marker connector transmit this information to a completing marker in the second marker group.

This type of operation reduces the number of incoming registers and incoming tandem trunks that would be required in the second marker group. It will also permit the outgoing trunks to a particular connecting office to appear in only one of the marker groups within the building.

C. OPERATOR JUNCTOR OPERATION

Operator junctors are trunks that originate at the toll and DSA switchboards and terminate in the crossbar No. 5 office. These trunks are used by the toll and DSA operators to gain access to the outgoing trunks in the crossbar No. 5 office. Since the operator junctor is a type of tandem trunk, a No. 5 office must be equipped for tandem operation in order to use it. The block schematic for operator junctor operation is shown in Figure 8-18.

TCI Library: www.telephonecollectors.info

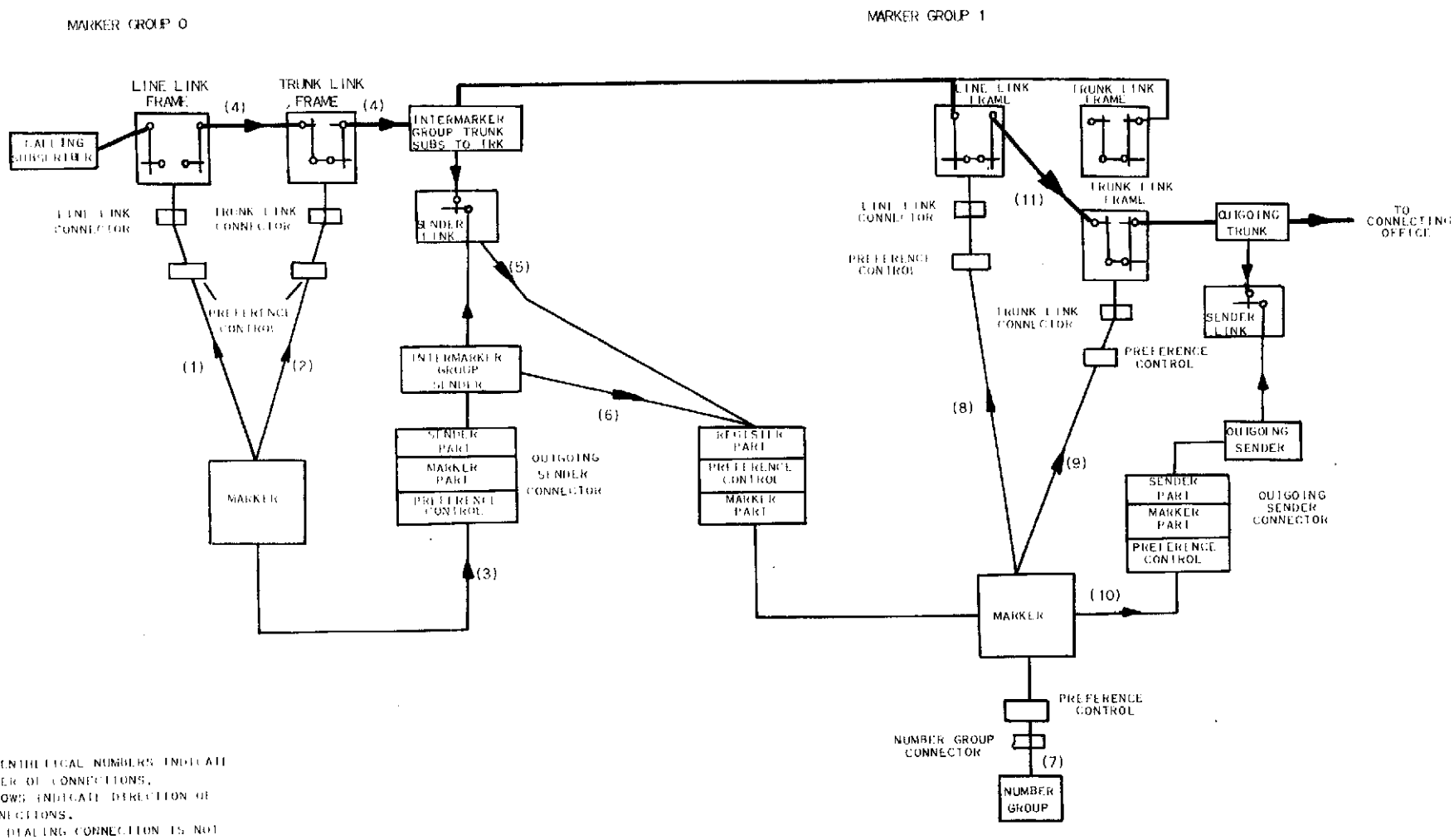

NOTES:

1. PARENTHETICAL NUMBERS INDICATE ORDER OF CONNECTIONS.
2. ARROWS INDICATE DIRECTION OF CONNECTIONS.
3. THE DIALING CONNECTION IS NOT SHOWN.

Figure 8.17 Intermarker Group Trunk Connection Customer to Trunk

TCI Library: www.telephonecollectors.info

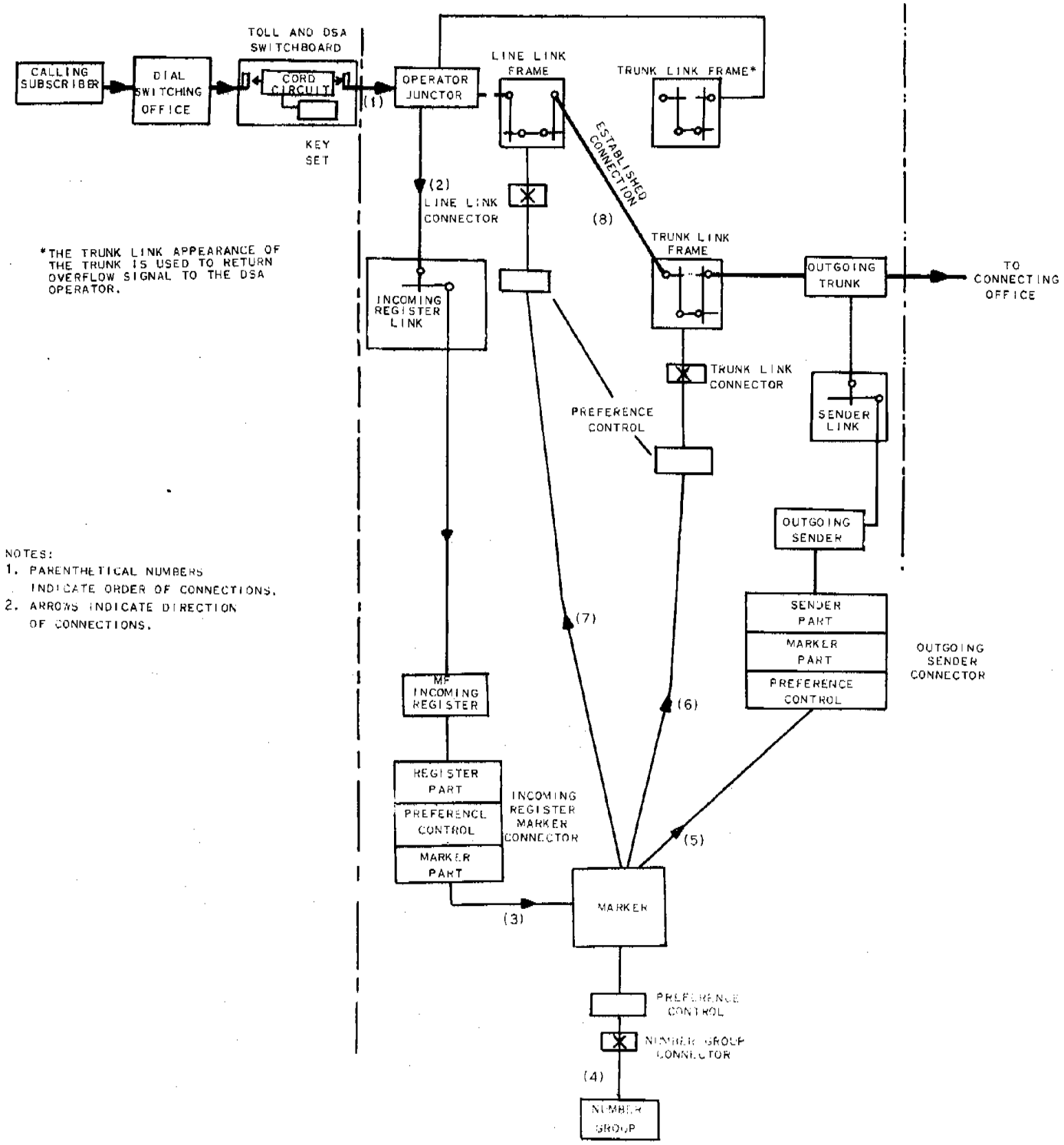

Figure 8-18 Operator Junctor Operation

TCI Library: www.telephonecollectors.info

In completing such a call the operator will always use multifrequency pulsing regardless of the type of pulsing required at the terminating office, since the crossbar No. 5 common control equipment will outpulse whatever is required.

D. COIN JUNCTOR OPERATION

The coin junctor is a unit of equipment used for handling outgoing interoffice and subscriber to trunk intermarker group coin traffic. Coin junctors can be used as alternate routes for groups of regular outgoing coin trunks. With this arrangement, outgoing trunks that handle coin and noncoin traffic do not need coin features. The block schematic of the coin junctor operation is shown in Figure 8-19.

This type of operation requires that two channels be selected through the switching network. One channel from the subscriber to a coin junctor, the second channel from a coin junctor to a noncoin outgoing trunk. It will be noted that the coin junctor acts as both an outgoing and an incoming trunk in the No. 5 office. One group of outgoing trunks will handle both coin and noncoin traffic.

E. PULSE CONVERSION OPERATION

The pulse conversion operation is an assistance to the operator in converting the multifrequency pulses from her key set to dial or revertive pulses as required for the terminating office. It does not require the selection of a path through the crossbar No. 5 office. The trunk selected by the operator terminates in the connecting office but has an appearance in the crossbar No. 5 office so the common control equipment in the No. 5 office is able to receive and transmit pulses over the trunk. The block schematic for this operation is shown in Figure 8-20.

The operator selects an outgoing trunk to the desired termination. However, the trunk does not close a path through to the connecting office. The trunk has an appearance on the incoming register link frame and signals it that a connection to an incoming register is desired. When the register is attached, it will signal the operator to start pulsing. After pulsing has been completed the register will seize a completing marker and transfer to it the stored information located in the register. From the class of the incoming trunk the marker will recognize this as a pulse conversion type of call and will act accordingly.

TCI Library: www.telephonecollectors.info

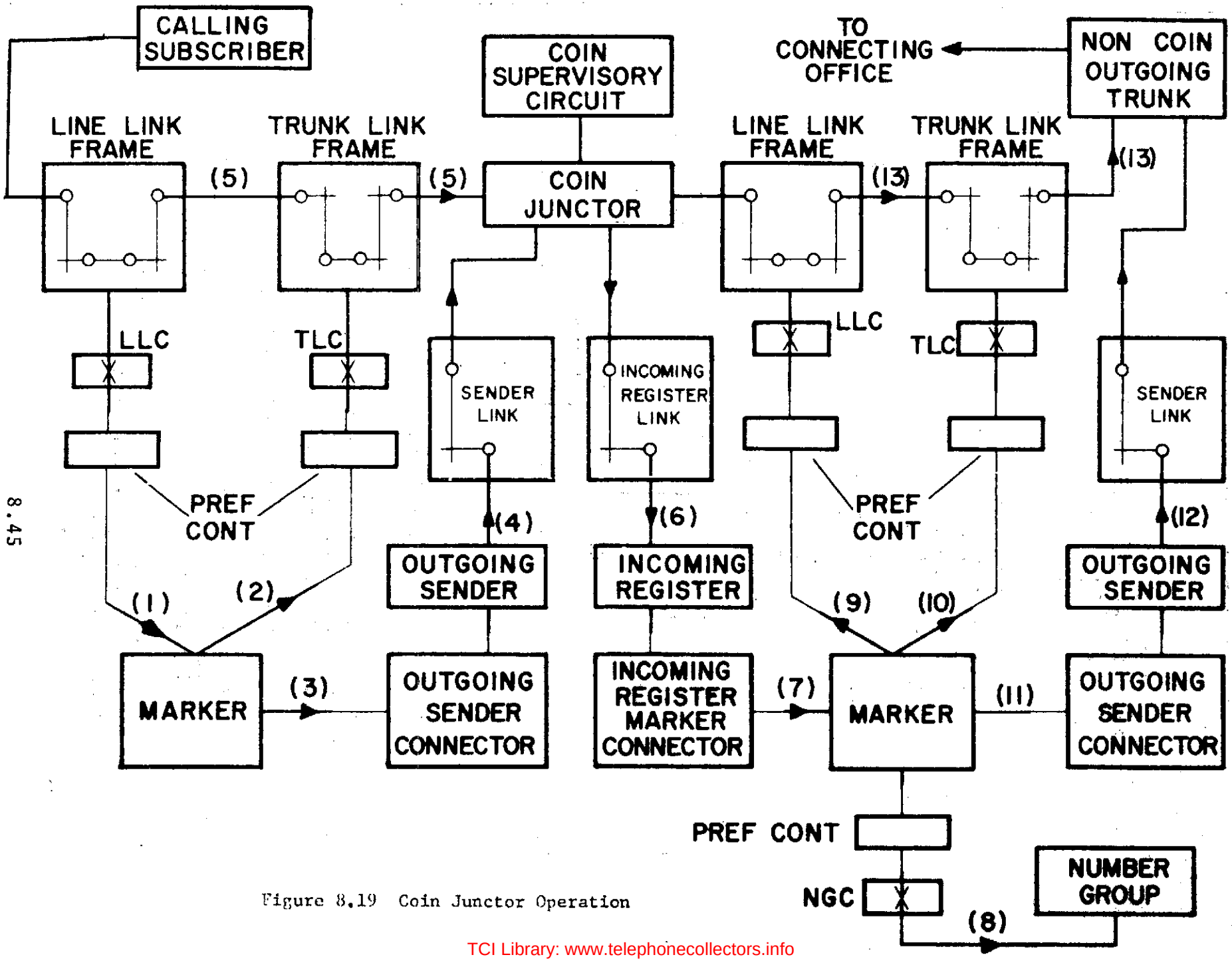

Figure 8.19 Coin Junctor Operation

TCI Library: www.telephonecollectors.info

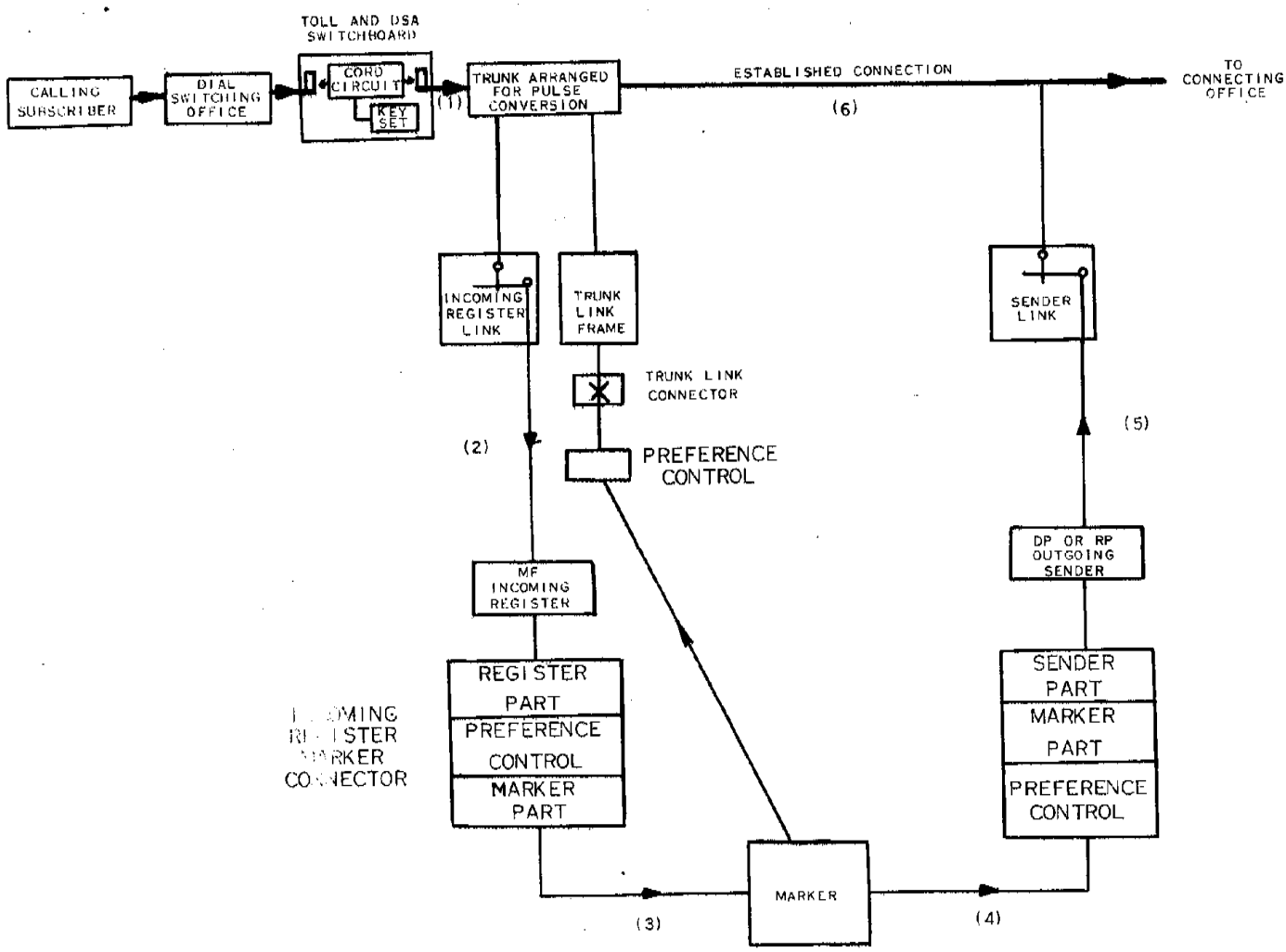

Figure 8-20 Pulse Conversion Operation

While the common control equipment of the No. 5 office was used to convert MF pulsing to RP or DP pulses, no use was made of the switching network.

8.8 NO. 5 CROSSBAR OFFICE ARRANGED FOR CENTREX SERVICE

Centrex for No. 5 Crossbar offices has gone through three basic phases of development. These phases are defined in the following steps.

a. Phase I circuits contain centrex features developed with attendant transfer as the basic mode of operation.

TCI Library: www.telephonecollectors.info

b. Phase II circuits were developed on a standard basic with attendant transer as the basic mode of operation with several additional features.

c. Phase III circuits were developed with dial transfer as the basic mode of operation enabling more efficient operation and considerable savings over Phases I and II. Figure 8-21 shows Phase III circuits for use only in new centrex offices or in existing No. 5 Crossbar offices arranged for 100 classes of service that may be used to provide centrex service.

Centrex facilities enable a PBX customer to obtain a flexibility of operation previously unobtainable with normal PBX facilities. Centrex facilities permit incoming calls to be completed to an extension without the aid of an attendant (direct-inward-dialing); permit calls to be transferred from one extension to another without the aid of an attendant (dial transfer); and also enables direct distance dialed calls to be automatically billed to individual extensions.

In the No. 5 Crossbar system these facilities are divided into two general categories. Centrex CO enables the PBX customer to use No. 5 Crossbar switching equipment located on telephone company premises whereas Centrex CU provides for the equipment to be located on his own premises.

In this specification, the extensions associated with one customer which are served by a Centrex CO are referred to as Centrex stations and constitute a customer group.

A. METHOD OF OPERATION - GENERAL

The method of operation, described in this section, covers the dialing arrangements which are required to initiate and to transfer calls from Centrex lines as well as the No. 5 Crossbar system operation which is required to handle calls originating from and completing to Centrex CO and Centrex CU lines.

TCI Library: www.telephonecollectors.info

In addition to the operation described in this section of the specification, a Centrex CO can be arranged to transfer incoming calls automatically to an attendant when the call encounters a Centrex line which is either busy or doesn't answer. It also can be arranged to transfer the listed directory number (LDN) calls to a Centrex line when the attendant's position is not occupied.

B. DIALING ARRANGEMENTS

This section covers only the dialing arrangements which are required to initiate a call in order to gain access to the No. 5 Crossbar switching equipment. The arrangements which are required for transferring calls are covered in the transfer portions of the description of system operation. These dialing arrangements are used with both the rotary dial and TOUCH-TONE sets.

The Centrex line dials "0" when he requires the assistance of a Centrex operator; "9" when he calls a party whose line terminates outside of his customer group or when he requires the assistance of a DSA or toll operator; and a 1XX code when he calls a party whose line terminates in a distant PBX or Centrex office which is connected by direct tie lines to the customer's Centrex CO or CU. The 1XX codes may also be used for special services. The Centrex station dials four- or five-digits of the called number when he calls a party whose line terminates in the same customer group. (Four-digit numbers restrict the Centrex CO to 7000 Centrex numbers since digits 0, 1 and 9 cannot be used as the thousands digit. Five-digit numbers enable the Centrex CO to use the full 40,000 number capacity of a marker group for Centrex numbers.)

C. CENTREX CO SYSTEM OPERATION

In Centrex CO operation, Centrex lines are assigned line link frame appearances with a class of service and rate treatment identification which enables the dial tone marker to identify them as Centrex lines and also to determine their associated customer group.

All Centrex lines have directory numbers assigned to them but the attendant's number or numbers are normally the only ones which are listed in the telephone company's directory.

Although the full seven digits of the directory number are required for direct-inward-dialed calls, only the last four or five digits are dialed for calls between Centrex lines in the same customer group (intracustomer group calls).

TCI Library: www.telephonecollectors.info

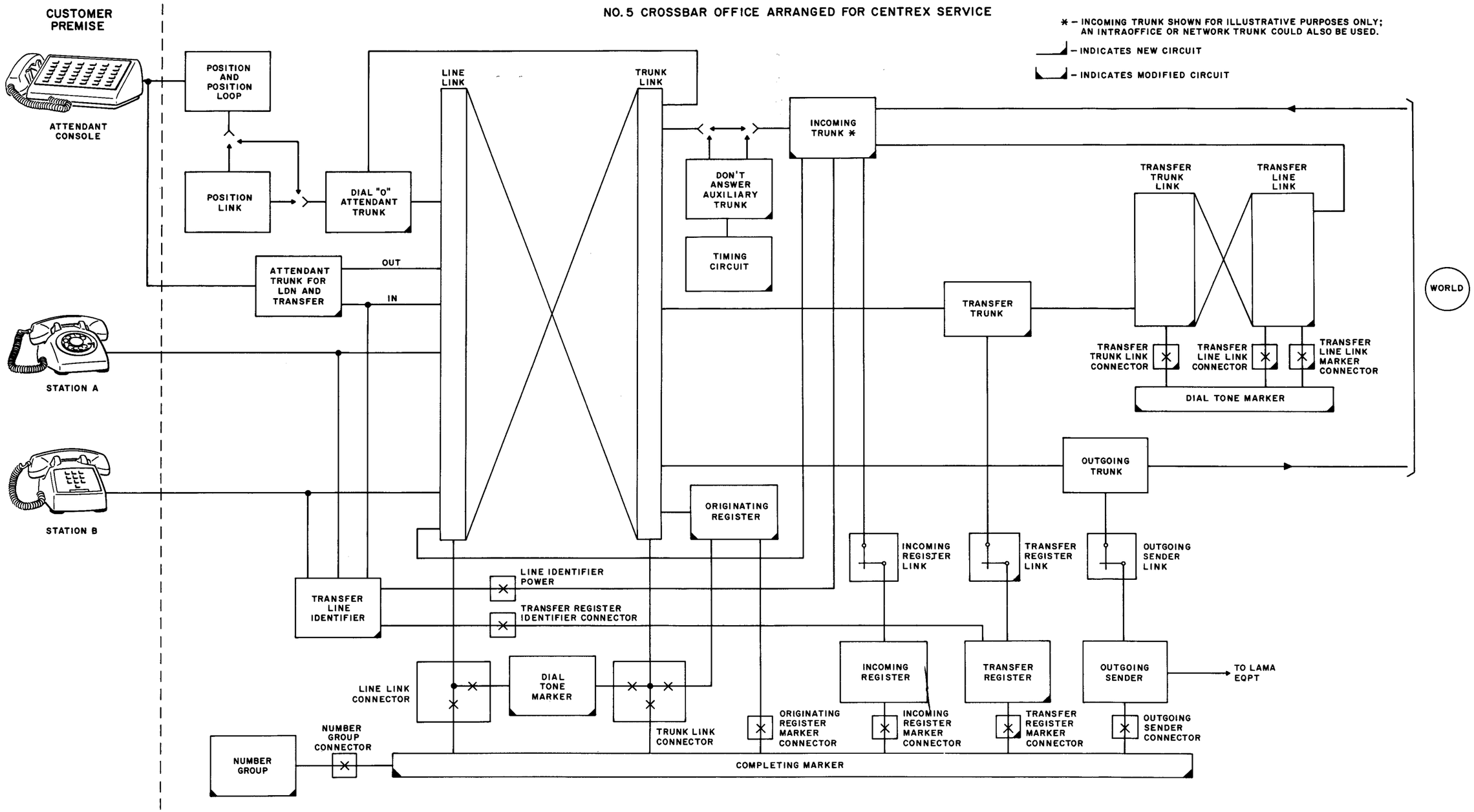

Figure 8.21 - Phase III Offices

TCI Library: www.telephonecollectors.info

In Centrex operation, the originating register assumes that the calling line is a Centrex line and that only four digits will be dialed unless it receives information to the contrary.

If the customer group is arranged for five digit numbers, the originating register receives an appropriate indication from the dial tone marker.

If the originating register receives the digits 0, 1 or 9 as the first digit, it realizes that the call is not an intracustomer group call and takes the required action.

If a regular customer line is connected to the originating register, the originating register recieves an indication from the dial tone marker that the calling line is not a Centrex line.

D. OUTGOING, INTRAOFFICE, INTERMARKER GROUP CALLS

Outgoing, intraoffice, and intermarker group calls from Centrex lines are handled in essentially the same manner as they are handled for basic customer service. However, originating register request and dial tone connection are handled differently.

The signal generated by the calling Centrex line causes the line link frame to ask the dial tone marker for a connection to an originating register. When the connection is established, the originating register sends dial tone to the calling Centrex line as a signal to begin dialing.

The calling Centrex line dials "9" into the originating register and waits for a second dial tone or will continue to hear the initial dial tone.

The originating register determines, from the digit 9, that the call will complete outside of the customer group and will not break dial tone or send a second dial tone as a signal to start dialing the number of the called party. The remainder of the operation is the same as for the basic customer services. When these calls require the use of automatic message accounting facilities, they are handled the same as any other call which requires the use of these facilities.

E. DIRECT-INWARD-DIALED CALLS (INCOMING AND INTRAOFFICE)

Direct-inward-dialed calls, both incoming and intraoffice, are handled the same as regular incoming and intraoffice calls.

TCI Library: www.telephonecollectors.info

F. INTRACUSTOMER GROUP CALLS

Intracustomer group calls are handled essentially the same as intraoffice calls. For intracustomer group calls, however, the calling Centrex line dials only the four or five digit number of the called Centrex line. When the originating register receives the digits of the called number, it connects to a completing marker and passes the digits to it along with a translation mark which informs the completing marker that it will receive only four or five digits. At the same time, the originating register line memory frame passes the calling Centrex line's line link frame termination and class-of-service to the completing marker. Then the completing marker which receives the digits, selects an intraoffice trunk and proceeds to establish the transmission path the same as for an intra-office call. Before the transmission path connection is established, however, the completing marker matches the class of service of the calling line. If both classes of services are identical, the completing marker is satisfied that the called line is in the same customer group as the calling line and establishes the transmission path connection.

G. LISTED DIRECTORY NUMBER CALLS (LDN)

LDN calls originate from a customer outside of the customer group and complete to a Centrex attendant.

The customer places an LDN call when he wished to obtain the number of a Centrex line; when he wishes to be connected to a Centrex line and doesn't know the seven digit number required for direct-inward-dialing; and when he wishes any of the various services previously available from a PBX operator. In Centrex CO operation the attendant may be assigned to an attendant console or a 608 type switchboard.

TCI Library: www.telephonecollectors.info

I. LDN CALLS TO AN ATTENDANT EQUIPPED WITH A CONSOLE

These calls are handled similar to direct-inward-dialed calls. However, the incoming or intraoffice trunk is connected to an attendant trunk instead of to a Centrex line.

The attendant trunk is assigned two link frame appearances and may connect either to a specific console or through the Centrex position link frame to any of a number of consoles. One of the line link frame appearances enables the attendant to receive LDN calls, and to initiate the dial transfer operation, and the other appearance enables the attendant to originate calls from the console.

(a) Attendant trunk connects to a specific console.

When the connection between the attendant trunk and the incoming or intraoffice trunk is established, the attendant trunk signals the attendant by flashing a lamp at the console.

(b) Attendant trunk connects to a console through the Centrex position link frame.

When the connection between the attendant trunk and the incoming trunk is established, the attendant trunk requests the Centrex position link frame to connect it to a console. The Centrex position link frame selects an idle console and connects the attendant trunk to it. The attendant trunk then signals the attendant by flashing a lamp at the console.

J. TRANSFER CALLS

In Centrex CO operation several types of transfer calls can be handled. These types of calls include dial transfer by a Centrex line to another Centrex line, dial transfer by a Centrex line to an attendant, and attendant controlled transfer.

K. CALL TRANSFER INDIVIDUAL - BY A CENTREX STATION TO ANOTHER CENTREX STATION

This type of transfer enables a called Centrex line (station B) to transfer a call from the calling customer (station A) to another Centrex line (station C) without the aid of an attendant.

TCI Library: www.telephonecollectors.info

This section divides the method of operation for dial transfer calls into the following five segments:

1. Transfer Request Connection.

2. Transfer Register Request.

3. Line Identification.

4. Transfer Dial Tone Connection.

5. Transfer Transmission Path Connection.

Incoming and intraoffice calls can be transferred but intermarker group calls cannot. Since the method of operation is the same for transferring both incoming and intraoffice calls, only incoming calls will be discussed.

1. Transfer Request Connection

The transfer request connection includes both the original transmission path connection between the incoming trunk and station B and a connection between the incoming trunk and a transfer trunk through the transfer line link and transfer trunk link frames. When station B desires to transfer a call to station C, he flashes his switchhook as a signal to the incoming trunk that the call is to be transferred. (The incoming trunk has both a trunk link frame appearance and a transfer line link frame appearance.)

Upon receipt of the signal, the incoming trunk causes the transfer line link frame to connect to a dial tone marker through a transfer line link marker connector. The transfer line link frame, through this connection, asks the dial tone marker for a connection to a transfer trunk.

The dial tone marker connects to the transfer trunk link frame through the transfer trunk link connector and selects an idle transfer trunk (the transfer trunk also has a regular trunk link frame appearance). The dial tone marker then connects the transfer trunk to the incoming trunk through the transfer trunk link and transfer line link frames. (Junctor grouping frames are not used

TCI Library: www.telephonecollectors.info

with transfer line link and transfer trunk link frames.) The transfer line link frame also passes the trunk link frame number of the incoming trunk to the dial tone marker which in turn passes it to the transfer trunk where it is stored for subsequent use.

2. Transfer Register Request

The transfer trunk requests its associated transfer register link frame to connect it to a transfer register. When the connection is established, the transfer trunk passes both its own trunk link frame number and the incoming trunk's trunk link frame number to the transfer register where they are stored for subsequent use.

3. Line Identification Connection

The line identification connection includes the original transmission path connection between the incoming trunk and station B, a connection between the line identification power supply and the incoming trunk, and a connection between the line link frame which contains station B's line termination and the transfer line identification frame.

The transfer register connects to the transfer line identifier frame through the transfer register identifier connector and requests an identification of station B's line termination on the line link frame. At the same time, the transfer register causes the transfer register identifier connector to signal the transfer trunk that a line identification is to be made.

The transfer trunk signals the incoming trunk, through the transfer trunk link and transfer line link frames, to connect the line identification power supply to station B's line link frame termination through the original transmission path connection.

The line identifier power supply then supplies an identifying signal to the line link frame termination of station B. The line link frame uses this signal to connect to the transfer line identifier frame. The transfer line indentifier

TCI Library: www.telephonecollectors.info

frame scans the terminations on this line link frame and when it detects the signal through a termination, it passes the location of it to the transfer register frame.

When the line identification connection is established, the transfer trunk causes the incoming trunk to remove station A from the transmission path and place him on hold.

4. Transfer Dial Tone Connection

When the transfer register receives the location of station B's line link frame termination, it connects to a completing marker through the transfer register marker connector and passes both this information and the trunk link frame number of the transfer trunk to it.

The completing marker now releases the original transmission path connection between the incoming trunk and station B and establishes the transfer dial tone connection between the transfer trunk and station B through the trunk link, line link, and junctor grouping frames. When the completing marker establishes this connection it receives the class of service of station B's line link frame termination and passes it to both the transfer trunk and transfer register where it is stored for subsequent use. The completing marker then releases from the call and prepares to handle other calls.

The transfer register, having previously been connected to the transfer trunk through the transfer register link frame, sends dial tone over the transfer trunk to station B as a signal to begin dialing the number of station C.

5. Transfer Transmission Path Connection

The transfer transmission path connection is between the incoming trunk and station C through the trunk link, line link, and junctor grouping frames.

TCI Library: www.telephonecollectors.info

This connection along with the portion of the transfer request connection between the incoming trunk and the transfer trunk and the portion of the transfer dial tone connection between the transfer trunk and station B, will permit private consultation between stations B and C.

When the transfer register receives all the digits of the number, it again connects to a completing marker through the transfer register marker connector. The transfer register then passes station C's number, station B's class-of-service and the trunk link frame number of the incoming trunk to the completing marker. The completing marker obtains the line link frame termination of station C from the number group frame and establishes the transfer transmission path connection. The completing marker then causes ringing to be applied to station C and releases from the call. Although the transfer transmission path has been established, station A is retained on hold by the incoming trunk and is unable to talk to station C. Private consultation, however, is possible between stations B and C.

Station B informs station C that station A wishes to talk to him. If station C agrees to talk to station A, either station B or C flashes the switchhook as an indication to the incoming trunk to remove station A from hold and to add him to the transmission path (add-on).

Station B now either releases from the call or remains in the path and engages in a three-way conversation with stations A and C. If station C does not answer or his line is busy, station B flashes his switchhook as an indication to the incoming trunk to remove station A from hold and reconnect his to station B. This connection is established through the path used by station B for private consultation with station C. The transfer transmission path connection between the incoming trunk and station C, however, is released.

If either station B or station C disconnects from the call during conversation, the associated portion of the transmission path is released. If station C wishes to transfer station A to another Centrex line, he flashes his switchhook and the complete dial transfer operation is repeated.

TCI Library: www.telephonecollectors.info

If station B wishes to retransfer station A to another Centrex line, when station C disconnects from the call, he flashes his switchhook as a signal to the transfer trunk to originate the retransfer. Since the identification of the line termination of station B has already been accomplished during the first request, that portion of the operation is not repeated.

L. CALLS TRANSFERRED TO AN ATTENDANT

This type of transfer enables station B to transfer a call to an attendent. Like an LDN call, the attendant may be equipped with a call director, a regular station set, or a console.

1. Calls Transferred to an Attendant Equipped with a Call Director or Regular Station Set

Station B initiates a transfer to the attendant in the same manner as a transfer to station C. However, when the transfer dial tone connection is established and dial tone is returned to station B by the transfer register, station B dials the digit "0" instead of the last four or five digits of the listed directory number.

The completing marker, when it receives the digit "0", generates the last four or five digits of the attendant's listed directory number and obtains from the number group frame both the line link frame termination and an indication that this termination is a listed directory number. The completing marker signals the incoming trunk to remove station A from hold and establishes the transfer transmission path between the incoming trunk and the attendant.

Station B informs the attendant that station A wishes to be transferred and disconnects from the call.

The attendant flashes her switchhook and completes the transfer the same way a regular Centrex line (station C) completes a second transfer.

TCI Library: www.telephonecollectors.info

2. Calls Transferred to an Attendant Equipped with a Console

These calls are handled similar to the calls transferred to an attendant equipped with a call director or regular station set.

The transfer transmission path connection, however, is between the incoming trunk and the attendant trunk. The attendant trunk connects to the console and flashes the attendant the same as during an LDN call.

Also, the attendant, instead of flashing the switchhook, to initiate the second transfer, depresses a start in key on her console.

M. ATTENDANT CONTROLLED TRANSFER CALLS

A Centrex CO office may serve customer groups which permit calls to be transferred only by an attendant. Although Centrex lines in these customer groups cannot use the dial transfer method to transfer a call to an attendant or other Centrex lines, they can transfer a call to an attendant by merely flashing the switchhook.

When station A requests to be transferred, station B flashes his switchhook as an indication to the incoming trunk that he wishes to make a transfer. The transfer request, line identification, and transfer dial tone connections are established the same as for a regular dial transfer call.

When the completing marker establishes the transfer dial tone connection, it determines from station B's class of service that he is unable to complete the transfer by dialing and signals the transfer register that the call will be transferred by an attendant. The completing marker then releases from the call.

When the transfer register receives the signal from the completing marker, it withholds dial tone from station B and again connects to a completing marker through the transfer register marker connector.

TCI Library: www.telephonecollectors.info

The transfer register then generates a digit "0" and passes it to the completing marker along with the trunk link frame number of the incoming trunk and station B's class of service.

When the completing marker receives the digit "0" it establishes the transfer transmission path in the same way it establishes the path when station B initiates the transfer by dialing "0". The remainder of the call and the subsequent transfer by the attendant, also are handled the same as when station B indicates the transfer by dialing "0".

N. CENTREX CU OPERATION

In Centrex CU operation, a PBX is located on the customer's premises and functions with a No. 5 Crossbar marker group to provide the Centrex facilities.

The PBX, however, must be arranged to accept direct-inward-dialing before it can realize the full capacities of these facilities.

Calls from Centrex lines that are assigned to a Centrex CU are handled the same as calls from PBX extensions assigned to a PBX which does not have access to the Centrex facilities.

The PBX may be assigned either a separate office code or groups of four or five digit numbers within an office code which is shared with other PBX's or regular customers.

At the present time, only the PBX attendant can transfer calls.

O. PBX ASSIGNED A SEPARATE OFFICE CODE

This arrangement permits direct-inward-dialing calls, either incoming, intraoffice, or LDN calls, to be switched through the No. 5 Crossbar marker group similar to a tandem call. The outgoing dial pulse sender passes the digits to the selectors of the PBX over regular outgoing trunks.

However, the number of PBX's which can be served by a No. 5 Crossbar marker group is limited by the marker group capacity of six office codes.

TCI Library: www.telephonecollectors.info

P. PBX ASSIGNED GROUPS OF NUMBER WITHIN A SHARED OFFICE CODE

This arrangement requires line link pulsing facilities which are described in another section of this specification. The number of PBX's which can be served by a No. 5 Crossbar marker group is limited only by the marker group capacity of 40,000 numbers.

8.9 ADDITIONAL CUSTOMER SERVICE - LINE LINK PULSING

Line link pulsing (LLP) facilities enable PBX's which are served by a No. 5 Crossbar marker group to receive direct-inward-dialed calls to the individual PBX extensions.

These facilities are used in marker groups which are not arranged for Centrex operation and also may be used in marker groups arranged for Centrex operation when a PBX customer desires to retain his PBX and use it as a Centrex CU.

The fundamental capacity of a No. 5 Crossbar marker group arranged for line link pulsing is essentially the same as a marker group arranged for basic customer service. However, a maximum of 30 customer line appearances per line link frame may be used for line link pulsing lines to PBX's.

Two methods of operation are used to handle calls which require line link pulsing facilities. When the PBX extensions are not indentified in groups of one hundred or one thousand numbers, the completing marker uses the number group frame twice. However, when the PBX extensions are identified in groups of one hundred and one thousand numbers, the completing marker uses the numbers group frame only once.

8.10 CALLS WHICH REQUIRE THE NUMBER GROUP FRAME TO BE USED TWICE

The transmission path for these calls is between the incoming trunk (intraoffice or intermarker group trunks may also be used) and a line link pulsing line through the trunk link, line link, and junctor group frame.

This path is established the same as the paths for calls to regular customer lines. However, additional signaling paths are required to pass the digits of the called PBX extension to the PBX.

TCI Library: www.telephonecollectors.info

When the completing marker receives the digits of the dialed number it proceeds to obtain a translation of it from the number group frame the same as if the call were to complete to a regular customer line.

The number group frame, however, determines that the called number terminates at a PBX and requires the use of the LLP facilities. It then passes to the completing marker the proper route to the PBX and the number of digits that are to be outpulsed.

The completing marker with the aid of its LLP frame generates a four-digit number that represents a group of line link pulsing lines which connect to the PBX and passes it to the number group frame.

The number group frame, upon receipt of this number selects an idle LLP line in the group and passes its line frame location, along with an identification of its associated LLP sender group, back to the completing marker.

The completing marker connects to an idle LLP sender within the sender group through the outgoing sender connector frame and passes to it both the last four-digits of the called number and the number of digits to be outpulsed to the PBX. If the four-digit number is an LDN number, the number group frame signals the completing marker that no digits are to be outpulsed. The completing marker generates a digit "0" and passes it to the LLP sender with instructions to outpulse it instead of the four-digits which were previously passed.

The completing marker also establishes the transmission path between the incoming trunk and the LLP line and connects the LLP sender at the LLP sender link frame. The completing marker then releases from the call.

When the PBX signals the LLP sender that it is ready, the LLP sender outpulses the proper number of digits to it. (The LLP sender will outpulse the full four-digits or the last one-, two-, or three-digits.)

8.11 CALLS WHICH REQUIRE THE NUMBER GROUP FRAME TO BE USED ONCE

These calls are handled the same as calls to PBX's which place restrictions on terminating service with the exception that the completing marker uses the number group frame only once.

TCI Library: www.telephonecollectors.info

Instead of passing the called number to the number group frame, the completing marker determines, from the called number that the call requires LLP facilities. It also determines from the called number the proper route to the PBX and the number of digits to be outpulsed to the PBX.

The completing marker, with the aid of its LLP frame, generates the four-digit number which represents the group of LLP lines to the PBX and passes it to the number group frame.

The remainder of the call is handled the same as a call which requires the number group frame to be used twice.

8.12 NO. 5 CROSSBAR SYSTEM - FOUR-WIRE NETWORK

The four-wire network shown in Figure 8-22 is primarily a private switching network which enables calls to be handled over high-quality four-wire transmission paths through the No. 5 Crossbar equipment. It may be used to handle normal voice, encrypted voice, and high speed data traffic and, when used for special instructions, can be arranged to handle calls on either a camp-on or preemption basis.

The traffic handling capacity of an individual four-wire or a combined two-wire four-wire marker group is essentially the same as the capacity of a two-wire marker group. Although the total equipment capacity of a combined marker group is the same as a two-wire marker group, the capacity of an individual four-wire marker group is smaller.

A. TRANSMISSION FACILITIES

Two grades of transmission are available in the four-wire network. Voice-grade transmission is used for the basic types of calls while special-grade transmission is required for encrypted voice and data machine calls and may also be used for the basic types. Voice-grade trunk groups connect to conventional carrier and repeater facilities while special-grade groups connect to more sensitively balanced and equalized facilities.

TCI Library: www.telephonecollectors.info

B. METHOD OF OPERATION

Both the four-wire and two-wire networks handle the basic types of call essentially the same. The dialing and transmission paths in the four-wire network, however, require four-wire line link, trunk link, and junctor grouping frames as well as four-wire originating and incoming registers, trunks and outgoing senders instead of the corresponding two-wire frames and units. The other frames and units are used in both networks.

In addition to the basic types of calls, the four-wire network can be arranged to handle encrypted voice and data machine calls for all customers and can be arranged to handle calls on a camp-on or preemption basis for special customers.

An encrypted voice or a data machine call requires the use of a trunk assigned to a special grade trunk group for access to the proper carrier and repeater facilities. The originator may or may not dial a control digit before he dials the directory number when he desires to place these types of calls.

The control digit indicates to the marker that a trunk to the connecting office is to be selected from the special grade trunk group. The originator may or may not also dial a control digit if he desires preemption or camp-on treatment of this call.

If this digit indicates that the call required preemption treatment and the marker finds that all trunks are busy it will disconnect an existing call between the two offices and seize the idled trunk to establish the required transmission path.

If this digit, however, indicates that the call requires camp-on treatment, the marker will attempt to select an idle trunk to the connecting office. If it finds that all trunks are busy, it will return the call to the originating register and establish a connection at the register priority link frame between the originating register and all trunks in the group. The register monitors the trunks and, when one becomes idle, seizes a completing marker and again requests a transmission path. The marker will attempt to select the idle trunk and if successful will proceed to establish the transmission path. If however, the

TCI Library: www.telephonecollectors.info

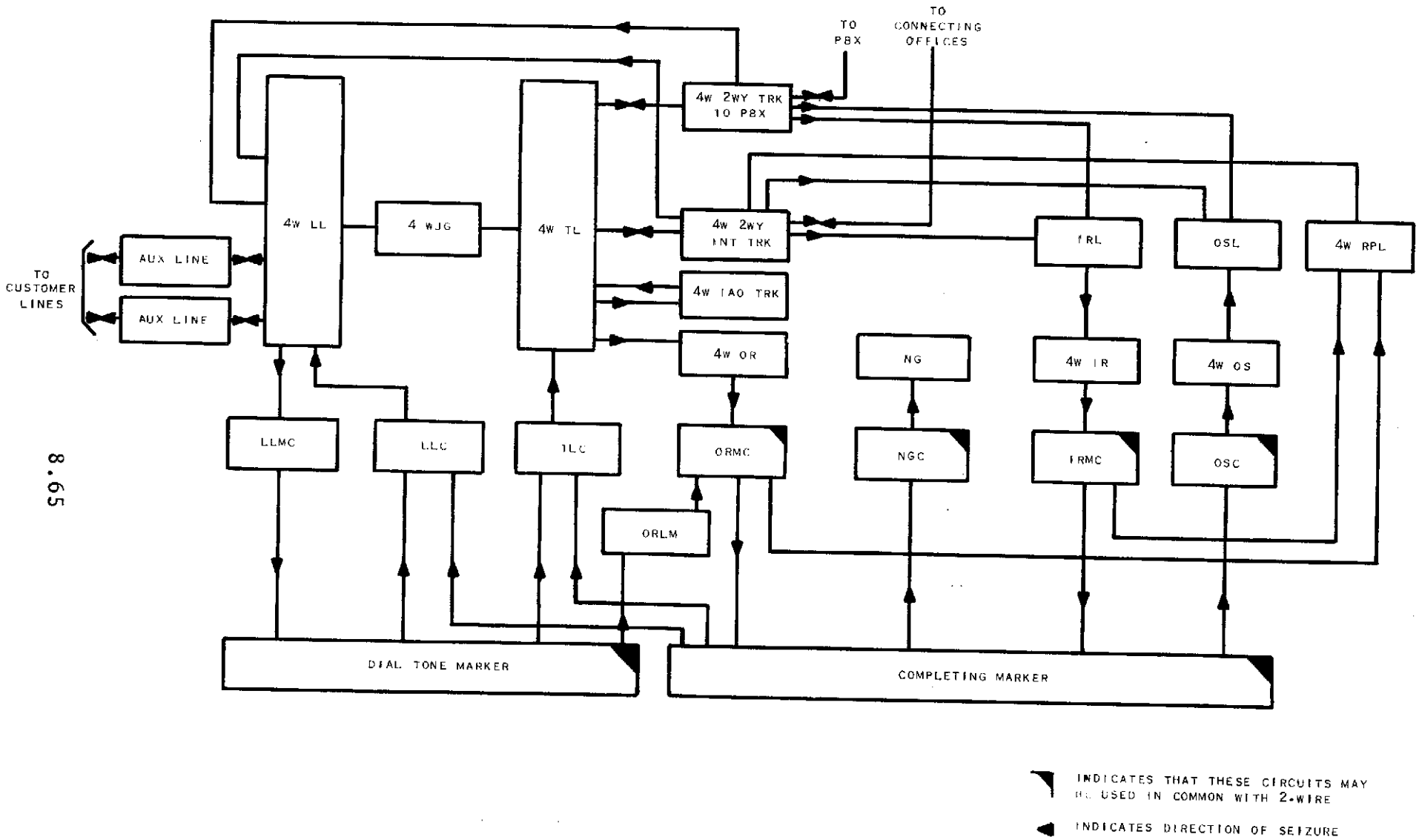

Figure 8.22 Additional Customer Service 4-wire

TCI Library: www.telephonecollectors.info

marker finds that all trunks are still busy it will again return the call to the register and reestablish the connection at the register priority link frame. This process will be repeated until the marker successfully selects a trunk.

The same basic operation is used for calls from a connecting office which are to be switched through a four-wire office. In this type of call, however, the marker returns the call to the incoming register and establishes the connection at the register priority link frame between the incoming register and the trunks of the group to the connecting office.

When an idle trunk is finally selected the marker establishes the transmission path between the line link frame appearance of the incoming trunk and the trunk to the connecting office.

C. FOUR-WIRE FRAME DESCRIPTIONS

The four-wire frames are divided into the same groups as the frames used for basic customer services in the two-wire network (two-wire frames).

This section describes briefly only the equipment used specifically in the four-wire network.

Connectors, dial tone and completing markers, and various test and maintenance frames are used in both networks. Variations in this equipment for operation in the four-wire network are optional features in the equipment specifications.

D. FRAMES IN THE TRANSMISSION PATH

1. Four-Wire Line Links

The function of the four-wire line link frames is the same as the function of the two-wire line link frames. The four-wire line link frame, however, uses two pairs of leads in the transmission path instead of a single pair. Each pair is used for transmission in only one direction.

TCI Library: www.telephonecollectors.info

The lines or trunks, with line link frame appearances, terminate on verticals of line switches and the junctors terminate on verticals of junctor switches. The horizontals of line and junctor switches are connected in a standard crossbar link pattern which gives the lines full access to junctors.

Both basic 190 line (two-bay) and basic 190 line (one-bay) four-wire line link frames are available.

The basic 190 (two-bay) four-wire line link frame is a double bay frame which contains crossbar switches and surface wired units of general purpose and line relays. This frame gives 190 lines access to its own 100 junctors and an additional 90 lines access to the 100 junctors on the basic 190 line (one-bay) frame.

The basic 190 line (one-bay) four-wire line link frame is a single bay frame which also contains crossbar switches and surface wired units of general purpose and line relays. This frame gives 100 lines access to 100 junctors.

Although the two-bay frame may be used by itself when an odd number of line link frames is required, the one-bay frame must be associated with a two-bay frame to attain its full capacity of 190 lines.

2. Four-Wire Trunk Links

The function of the four-wire trunk link frames is the same as the function of the two-wire trunk link frames. The four-wire frames, however, use two pairs of leads in the transmission path instead of a single pair. Each pair is used for transmission in only one direction.

The trunks and originating registers terminate on the horizontals of trunk switches and the junctors terminate on the horizontals of junctor switches. The verticals of the trunk and junctor switches are connected in the standard crossbar link pattern which gives all junctors full access to all trunks.

TCI Library: www.telephonecollectors.info

The basic four-wire trunk link frame is a double bay frame which contains crossbar switches, small fields of cross connection terminal strips, units of multicontact relays, and surface wired units of general purpose relays. This frame gives 100 four-wire trunks access to 200 junctors.

The four-wire supplementary trunk link frame is a single bay frame which contains crossbar switches, units of multicontact relays, and surface wired units of general purpose relays. This frame gives an additional 100 trunks access to the 200 junctors of the basic frame.

The four-wire extension trunk link frame is a single bay frame which contains primarily crossbar switches. This frame gives the trunks assigned to the basic and supplementary frames access to an additional 200 junctors.

3. Four-Wire Junctor Grouping Frames

The four-wire Junctor grouping frames consist of pairs of two-wire junctor grouping frames. The frames in the pair used for single trunk link frame operation are designated four-wire junctor grouping frames and four-wire extension junctor grouping frame. The frames in the pair used for paired trunk link frame operation are designated four-wire supplementary junctor grouping frame and four-wire supplementary extension junctor grouping frame. The four-wire junctor grouping and four-wire supplementary junctor grouping frames terminate the T, R and S leads of the junctors and the four-wire extension junctor grouping and four-wire supplementary extension junctor grouping frames terminate the T1 and R1 leads.

These frames are single bay frames which contain terminal strips and jumper rings for retaining the wire used for running the jumpers.

4. Four-Wire Trunks

Various four-wire trunks are available for use specifically with the four-wire switching network. These trunks include four-wire intraoffice trunks and four-wire two-way intertoll trunks.

TCI Library: www.telephonecollectors.info

Four-wire trunks are surface wired units consisting of from one to eight mounting plates of general purpose relay equipment.

E. FRAMES IN THE CONTROL PATH

1. Completing Marker Four-Wire

The function of the four-wire frame is to provide the additional control and translation facilities which enable the completing marker to perform its functions in the four-wire switching network.

The frame is a single bay frame which contains fields of cross-connection terminal strips and surface wired units of general purpose relays.

2. Four-Wire Originating Register

The basic function of the four-wire originating register is the same as the two-wire originating register. The four-wire originating register, in addition, can be arranged to signal the marker and to perform additional tasks when the call requires camp-on or preemption treatment. Like the two-wire originating register, the four-wire originating register can accept either dial pulses from a rotary dial set or TOUCH-TONE pulses from a TOUCH-TONE set.

The four-wire originating register consists of surface wired units of general purpose relays.

The four-wire originating register frame contains a maximum of eight originating registers and associated multicontact relay assemblies for assigning each register to one of a possible three originating register marker connectors.

3. Four-Wire Incoming Register

The basic function of the four-wire incoming register is the same as the function of the two-wire incoming register. The four-wire incoming

TCI Library: www.telephonecollectors.info

register, in addition, can be arranged to signal the marker and to perform additional tasks when an incoming call requires camp-on or preemption treatment.

Only four-wire incoming registers arranged to accept multifrequency pulses are available.

The four-wire incoming register consists of surface wired units of general purpose relays.

4. Auxiliary Originating Register - Incoming Register Marker Connector

The function of the auxiliary originating register - incoming register marker connector frame is to provide connections between the completing markers and the four-wire originating and four-wire incoming registers in addition to those provided by the basic originating register and incoming register marker connector frames. This frame is a single bay frame which contains multicontact relay assemblies.

5. Four-Wire Outgoing Sender

The basic function of the four-wire outgoing sender is the same as the function of the two-wire outgoing sender. The four-wire outgoing senders, however, can handle calls which originate in the four-wire switching network and complete to a two-wire network, in the same marker group, in addition to calls which both originate and complete in the four-wire network. Calls which complete to the two-wire network in the same marker group may either complete to a local customer or may be switched through the two-wire network on a tandem basis.

Only a four-wire outgoing multifrequency sender is used for basic operation in the four-wire switching network.

The four-wire outgoing sender consists of surface wired units of general purpose relays.

TCI Library: www.telephonecollectors.info

6. Register Priority Links

The function of the register priority link frame is to give four-wire originating and incoming registers access to the group busy leads of the various four-wire trunk groups when a call requires camp-on treatment. The registers monitor the appropriate trunk groups and signal the completing marker, when a trunk becomes idle, to make another attempt to establish a transmission path.

F. FOUR-WIRE MAINTENANCE AND TEST FACILITIES

The same facilities which are used in the two-wire switching network are used in the four-wire switching network. However, four-wire register and senders are tested only with the manual test set facilities. The variations which are required to permit operation with the four-wire switching network are covered in the individual equipment specifications.

G. ADDITIONAL CUSTOMER SERVICE - FOUR-WIRE DIRECT-INWARD-DIALING

Four-wire direct-inward-dialing (DID) enables a four-wire marker group to provide direct-inward-dialing to a step-by-step PBX extension and permits direct outward dialing from a PBX extension to the four-wire marker group, also shown in Figure 8-22.

The PBX in addition to being arranged for DID, must also be arranged to convert the two pairs of wires in the normal four-wire transmission path to the single pair available at the PBX.

The capacity of a marker group arranged for four-wire direct-inward-dialing is the same as the capacity of a marker group arranged for four-wire switching without direct-inward-dialing.

H. METHOD OF OPERATION

The transmission path for a call which completes directly to a PBX extension is through a four-wire line link frame appearance of a four-wire two-way intertoll trunk and the four-wire trunk link frame appearance of a four-wire two-way trunk to a PBX.

TCI Library: www.telephonecollectors.info

If the call to a PBX is originated by a customer whose line terminates on a four-wire line link frame in the same marker group, the transmission path is between the four-wire line link frame appearance of the line and the four-wire trunk link frame appearance of the four-wire two-way trunk to a PBX.

The four-wire two-way trunk to a PBX has both a four-wire line link frame and a four-wire trunk link frame appearance. The four-wire line link frame appearance enables the PBX extension to originate calls to the four-wire marker group and the four-wire trunk link frame appearance enables a call from a four-wire marker group to be direct-inward-dialed to the PBX extension.

The transmission path for calls which are originated by a customer line in the four-wire marker group is established the same as the path for outgoing calls. The path for calls which originate in a connecting marker group is established the same as the path for other calls which are switched through the four-wire marker group on a toll switching basis.

For this transmission path, however, the completing marker selects a four-wire outgoing dial pulse sender instead of a four-wire outgoing multifrequency sender to match the pulsing requirements of the PBX.

TCI Library: www.telephonecollectors.info

CHAPTER 9

NO. 1 ELECTRONIC SWITCHING SYSTEM

9.1 INTRODUCTION

The No. 1 ESS is an automatic telephone switching system that has

(a) The capacity for serving up to 65,000 customer lines

(b) Features which are expected to permit minimum maintenance

(c) The ability to complete connections between subscribers in a fraction of the time required by electromechanical type switching systems.

(d) The versatility to provide new features and services economically

The No. 1 ESS is a common control type system. It differs radically from electromechanical switching systems in the devices that it uses as well as in the techniques that it employs. Throughout the system, solid-state electronic devices are used extensively. Their high operating speeds permit a relatively small amount of equipment to perform all the control functions. A major feature is the greatly reduced time required to complete connections between customers.

Some of the basic techniques employed in this system are:

(a) Stored program control: The functions to be performed by the system are specified by programs consisting of appropriate combinations of precisely defined instructions. Examples of such instructions are: "Observe the supervisory state of a specified group of lines," "Add two specified quantities," and "Observe the sign of a specified quantity and decide accordingly which of two alternatives to follow." The program instructions, suitably encoded, are stored in a memory unit from which they are transmitted one at a time to the control circuitry for execution. Thus, the operation of the system can be altered considerably by program changes.

TCI Library: www.telephonecollectors.info

(b) Functional concentration: The system equipment is concentrated in a small number of highly efficient units, each specialized in some broad system function such as control, input, output, memory, etc. The result is an overall system organization that is conceptually very simple.

(c) Time shared control: A single control unit directs the operation of all other system units in accordance with the program instructions. Using electronic devices, this control unit can operate at speeds much higher than the rate at which events associated with a single call occur. Consequently, the control equipment is time-shared by all the calls handled by the system. This is accomplished by subdividing the work required to process a call into small segments and by interleaving these segments with those associated with other calls. In addition, certain operations can be performed concurrently on behalf of a number of calls.

(d) Modular design: Traffic-dependent units are provided in modular blocks so that growth in a given office, or differences in traffic among offices, can be accommodated economically and conveniently.

(e) Plug-in equipment units: In major portion of the equipment, circuit components such as transistors, resistors, etc., are mounted on circuit packs, which are plug-in units with printed wiring. Faulty circuit packs can be quickly replaced.

(f) Duplication and automatic maintenance: To insure continuity of service, duplication of equipment is provided for a system unit (or portion thereof) whose failure would affect a large number of customers. This is true of most system units because of the functional concentration previously mentioned. Under normal conditions, both units of a duplicate pair operate side-by-side in response to the same input information but only one of the two is given active status. By continuously compairing the outputs of duplicate units and by other means, it is possible to detect the existence of a malfunction within the system. The unit at fault is automatically identified by appropriate programs and is taken out of service. While the system continues to provide telephone service, an appropriate diagnostic program submits the faulty unit to a thorough sequence of tests aimed at pinpointing the trouble within one or a few plug-in units. The results of the tests are printed out by the system via a teletypewriter. A "dictionary" is used by the

TCI Library: www.telephonecollectors.info

maintenance man to translate the diagnostic printout into the identity of the plug-in unit(s) at fault. Additional ease of maintenance results from the use of 7-foot, single-sided frames which eliminate the need for ladders.

Included among the features to be provided by this system are: 2- and 4-wire switching, local switching with connections to all types of systems, toll and tandem, switching, and special services such as CENTREX, wide area telephone service (WATS), and wide area data service (WADS).

Some of the new customer services which may be provided are:

(a) Abbreviated or Speed Dialing: A customer can place calls to one of a group of frequently called numbers by dialing an abbreviated code instead of the seven or more digits that would normally be required.

(b) Dial Conference: A customer can establish a conference call, involving up to four parties, without operator assistance.

(c) Add-On: A customer can add a third party to an established connection.

(d) Call Waiting Service: A customer whose line is busy is informed that an incoming call is waiting. The customer is allowed to hold the present connection while answering the new call.

(e) Variable Transfer: A customer activates this service by dialing a special code followed by the directory number of the station to which his incoming calls are to be transferred. The customer deactivates this service by dialing an appropriate code.

(f) Preset Transfer: A customer activates this service by dialing a special code followed by a digit that specifies to which of eight stations all his incoming calls are to be transferred. The customer deactivates this service by dialing an appropriate code.

TCI Library: www.telephonecollectors.info

Floor space requirements are considerably less than equivalent installations of electromechanical systems.

This system is compatible with existing station equipment and existing local and toll switching machines. It may be used as a growth or dial replacement unit without the necessity of station modifications and with a minimum of trunking changes at the distant offices.

A. PRINCIPLES OF OPERATION

The major No. 1 ESS equipments and their corresponding functions are briefly described below (see Figure 9-1).

1. Program Store

The program store (PS) stores the instructions that guide the system step-by-step in the performance of its operations. The PS also contains translation information regarding lines and trunks. This information is used to convert a directory number into an equipment location or vice versa. Translations are also used to derive routing and charging information, class of service, type of ringing, special services, and other items of fixed information pertaining to individual lines or trunks.

The PS is said to be a semipermanent memory because its contents can be altered only by external means.

2. Call Store

The call store (CS) provides the means for recording various types of information that later can be read, altered, or erased. Since the CS can write as well as read information, it is said to be a temporary or erasable memory.

The CS derives its name from the fact that it is mainly used to store information relating to calls in progress. The stored information includes:

(a) Busy-idle status of network links,
(b) Digits being received,
(c) Digits to be outpulsed,
(d) Billing information to be recorded on an AMA magnetic tape, or
(e) Results of diagnostic tests.

TCI Library: www.telephonecollectors.info

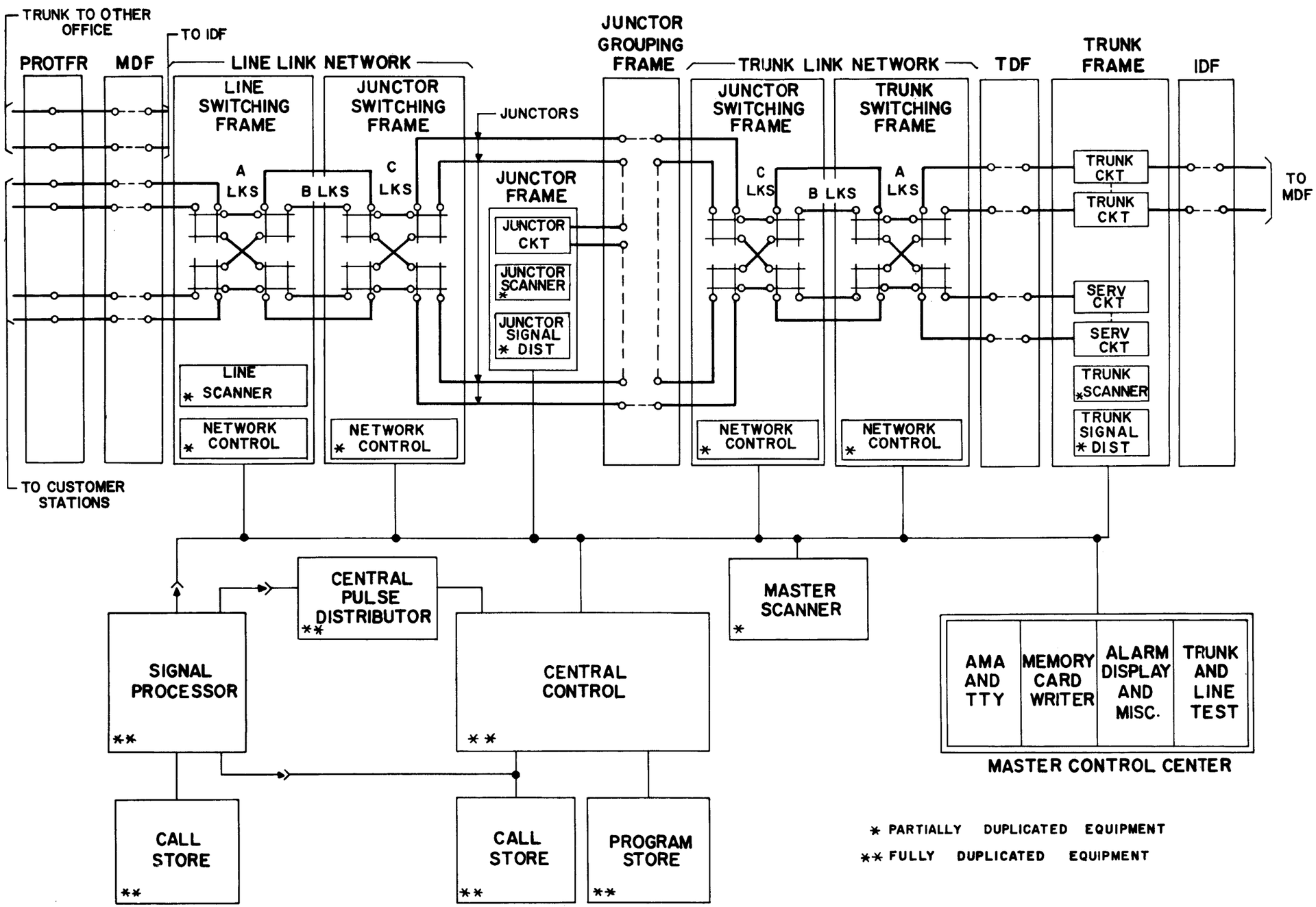

Figure 9-1 Block Diagram - No. 1 Electronic Switching System

TCI Library: www.telephonecollectors.info

Another important use of the CS is associated with recent changes of translation information. The superseding information is stored in the temporary memory until it is incorporated in the translation information of the PS. This means that the system must always consult the recent change information of the CS before referring to the translation information in the PS.

3. Central Control

The central control (CC) is a high-speed data-processing unit that controls the actions of all other system units. It interprets and executes instructions received from the program store, normally, at the rate of one instruction every 5.5 usec. The execution of an instruction may involve:

(a) An operation to be carried out within the CC itself, such as the addition or comparison of two quantities, or

(b) A request to some other unit for action or information.

In all cases, the CC determines the location (or address) of the next instruction to be obtained from the program store (PS).

4. Bus System

A group of leads, referred to as a bus, provides a common highway that serves a multiplicity of units. A gating scheme allows the bus to be time-shared by the different units it serves.

5. Central Pulse Distributor

The central pulse distributor (CPD) is used to transmit pulse signals for high-speed control actions. The signals are used to control:

(a) Relays in trunk and service circuits such as dial pulse transmitters or digit receivers,

(b) Various maintenance and test points, or

(c) Lamps and relays in the master control center (MCC).

TCI Library: www.telephonecollectors.info

The CPD is also used to send enable pulses that activate scanners, signal distributors, network controllers, teletypewriters, and AMA recorders. These units are referred to as peripheral units. The transmission of information to peripheral units takes place over a common group of wires, or bus. An enable pulse from a CPD singles out the particular peripheral unit that must respond to the information on the common bus.

A CPD selects and pulses the particular output lead specified by information received from CC.

6. Scanners

The scanners are current sensing devices. The interrogate and readout wires of a scanner are similar to the primary-secondary windings of a transformer.

Line scanners and junctor scanners are used to supervise lines and junctor circuits, respectively. Trunk scanners supervise trunk circuits and service circuits. Via the master scanner, the system can observe various points within the individual units. This may be done for one of several reasons:

(a) To perform a diagnostic test,

(b) To verify the proper execution of an action previously requested, or

(c) To recognize existing conditions in order to take appropriate steps.

The conditions observed are transmitted back to CC.

7. Signal Distributors

The signal distributors (SD) serve to operate or release magnetically latching relays in various junctor, trunk, or service circuits. Since they are mainly relay controlled, they are used only in applications with limited speed requirements.

An SD receives from CC information specifying a particular relay to be operated or released. The SD selects the appropriate lead and sends a signal to operate or release the relay.

TCI Library: www.telephonecollectors.info

8. Switching Network

The switching network provides the means to connect lines, trunks, and various service circuits such as pulse receivers or transmitters. For any connection between two network terminations, the path required is determined by CC which then sends the appropriate information to the switching network.

The switching network is made up of line link networks (LLN) and trunk link networks (TLN) interconnected by junctors. An LLN connects customer lines or PBX trunks to junctors. A TLN connects interoffice trunks or service circuits to junctors.

Each LLN or TLN involves four stages of switching, that is, a path through it involves three links connected by four pairs of metallic contacts or crosspoints (ferreeds).

9. Trunk and Service Circuits

The trunk circuits of the No. 1 ESS are considerably simpler than those of electromechanical systems. Their functions are limited mainly to supervision and transmission. All other functions of conventional trunks such as pulsing, charging, timing, etc., are delegated either directly to the program control or to the service circuits, which in turn are under program control. Service circuits include customer dial pulse and TOUCH-TONE receivers, tone circuits, ringing circuits, circuits for transmitting or receiving information, coin control circuits and other similar circuits.

The detection of conditions within these circuits is done by CC via the trunk scanner. The control of relays and other devices within the trunk and service circuits is also done by CC using the trunk SD or the CPD. There are very few instances of autonomous control within trunk and service circuits.

TCI Library: www.telephonecollectors.info

10. Master Control Center

The master control center (MCC) is made up of five independent parts:

(a) Teletypewriter system (TTY)

(b) Automatic message accounting (AMA) recorder

(c) Memory card writer

(d) Alarms, displays and miscellaneous controls

(e) Trunk and line test panel.

A teletypewriter provides the means for obtaining information from the system in the form of a page printout and, conversely, for typing information into the system. Examples of inputs to the system are changes in translation information to be recorded temporarily in the recent change area of the CC CS and requests for various maintenance checks under program control. Examples of outputs from the system are results of routine maintenance checks and of diagnostic tests when errors or faults occur. Traffic records are collected and summarized in the CS. Periodically they are printed out via a teletypewriter. Requests for certain traffic records may be made by typing appropriate messages into the system via teletypewriter.

Automatic message accounting in the No. 1 ESS will be compatible with Bell System electronic data processing (EDP) centers. While a call is in progress, the billing information is accumulated in temporary memory. Later, it is transferred to a magnetic tape as a single assembled entry for the call. The entire process is under control of the program.

TCI Library: www.telephonecollectors.info

The memory card writer is used to update periodically the translation information in the program store in order to incorporate recent changes recorded in the CS. By means of the memory card writer, the appropriate information is written on a spare set of memory cards by magnetizing or demagnetizing their magnetic spots, as required. These cards are then used to replace corresponding cards of the program store.

Lamp displays at the MCC show the status of major equipment units. When trouble occurs, audible and visible alarms are given and the general location of the trouble is indicated. Associated with the displays are keys and switches used in emergencies to assign active status to selected units. Keys for line load control and emergency manual service are also provided.

The trunk and line test panel contains facilities to remove from service any outgoing trunk, service circuit, or customer line and to test it. It is also used to dispose of permanent signals.

9.2 SWITCHING LOGIC IN SOLID STATE DEVICES

Unlike the stepper switches in the Step-by-Step System and the motor-driven shafts, clutches and cams of the Panel System or the relays and the relay-like crossbar switches and the "electrical circuits" which operated them, the No. 1 ESS uses "logic circuits" to achieve connecting patterns in its switching process. To establish a talking path between telephones could be viewed as the stage-by-stage progression of simple logical relations AND and OR. For example, consider a lamp plugged into a wall socket controlled by a wall switch. The lamp will not light unless both the lamp switch AND the wall switch are turned on. On the other hand, take the action of the dome light of an automobile which lights if one of the front doors OR the other is opened. Relays can be wired to open or close contacts in the same fashion and these simple logical relations can be repeated as often as necessary to form a highly complex system that decides complicated logical questions.

TCI Library: www.telephonecollectors.info

A. LOGIC CIRCUITS

In switching systems, for every set of "inputs" there is a corresponding set of "outputs." The internal circuitry that connects inputs to outputs consists of paths interconnecting discrete-valued (digital) devices such as relays, diodes, transistors, etc. The function of these devices is to "switch" (open or close) the interconnecting paths in predetermined patterns as required by the input information. The simplest control conditions are two valued, that is, they are in an "on" or "off," "open" or "closed," condition. For this reason, switching circuits are based primarily on "two-valued devices." Another fundamental characteristic of switching systems is their ability to "remember," that is, remain in a certain state until changed by some means. "Memory" makes it possible to combine present inputs with past history so that the processing of information can take into account the time involved relationships.

B. BINARY AND OCTAL NUMBERING SYSTEMS

The No. 1 ESS uses both a binary and octal numbering system. The binary system employes only two digits - a "0" and a "1", and is readily adapted to two-condition type electronic switching components that operate in "on" and "off" modes. Programs in the form of binary digits are stored in the memory portions of the electronic switching system while equipment and circuit numbering arrangements are arranged in the octal system which uses a radix of eight. Both numbering systems, however, can readily be converted to either base and also to the decimal system.

C. SEMICONDUCTOR DEVICES

Semiconductor diodes and resistors are used for the No. 1 ESS AND and OR gate circuits. However, diodes do not provide either gain or inversion, consequently, other switching devices must be employed for these two purposes.

A diode behaves like a low resistance when forward-biased and a high resistance, when back-biased. The low and high resistance states of a diode are often referred to as the "conducting" and the "nonconducting" states respectively. The change from one state to the other occurs in a few hundreds of a microsecond. Figure 9-2 shows the usual circuit symbol for a diode. The arrow points in the direction of the conventional current flow with a forward bias on the diode terminal. Diodes act as good conductors with

TCI Library: www.telephonecollectors.info

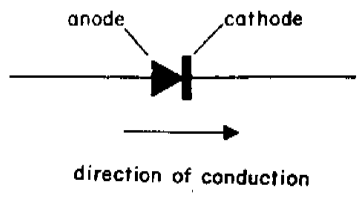

Figure 9-2 Diode Symbol

forward bias voltage applied and perform as insulators with reverse potentials. A typical No. 1 ESS 10,000 line telephone office contains over 200,000 diodes of eight different types which are used for logic switching, energy storage, voltage level shifting, memory access isolation, voltage regulation and numerous other applications.

The transistor has a number of advantages over that of a tube; for example, it can operate at greater speeds, is more reliable and has a low power requirement. Like the semiconductor diode, the transistor is also used as a two-state device. It is, however, a much more versatile device than the diode because of its gain characteristics. But, whether it is used in an amplifier, an inverter, a flip-flop or a gate circuit, the transistor may be viewed as a switch. Furthermore, the impedance of this switch can be made to vary from tens of megohms to a fraction of an ohm, which at this low value, can be considered as approaching the ohmic value of a metallic contact. Switching times are in the order of 50 nanoseconds (a nanosecond is one billionth of a second).

There are two basic types of transistors: N-P-N and P-N-P. The symbols for these two types are given in Figure 9-3.

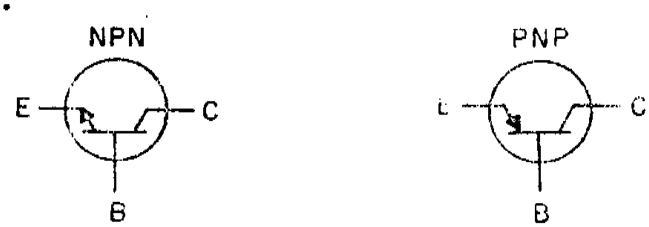

Figure 9-3 Transistor Symbols

The No. 1 ESS makes exclusive use of the N-P-N transistor. However, except for a reversal in the direction of currents and in the polarity of voltages, the P-N-P transistor functions in the same manner.

TCI Library: www.telephonecollectors.info

The transistor has three terminals; the emitter (E), the collector (C), and the base (B). A very rough analogy can be drawn between a transistor and a vacuum tube triode. In this analogy, the emitter corresponds to the cathode, the collector to the plate and the base to the grid. In the vacuum tube, the flow of electrons from the cathode to the plate is controlled by signal conditions applied to the grid; in the transistor, the flow of electrons from the emitter to the collector is controlled by signal conditions applied to the base.

D. BASIC CIRCUIT CONFIGURATIONS

The basic building block for the circuitry of the No. 1 ESS is the AND-NOT (NAND) gate shown in Figure 9-4; it is generally known as low-level logic (LLL) circuit.

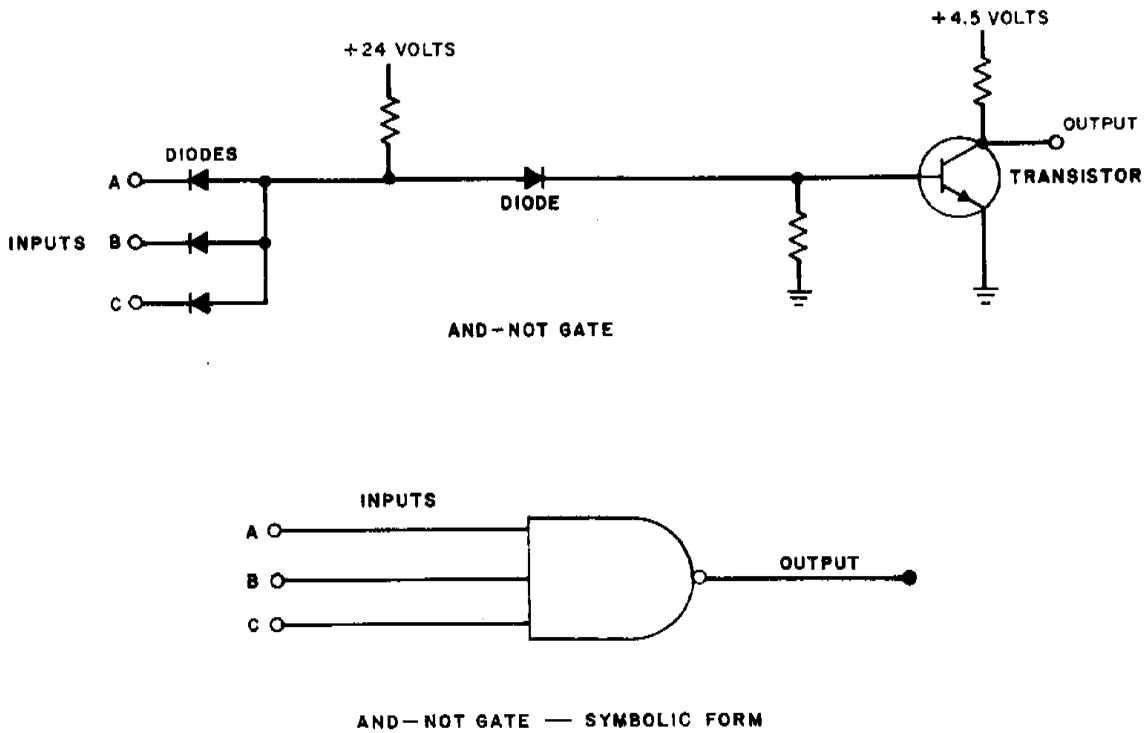

Figure 9-4 AND-NOT Gate Circuit

TCI Library: www.telephonecollectors.info

Its output is considered low (0 volts) when the inputs are high (+4.5 volts) and the output is high (+4.5 volts) whenever at least one of the inputs is low (0 volts). This building block is used in many circuit configurations classified as logic circuits and memory circuits. Consequently, the logic presented is referred to as the positive logic approach in circuit design.

Positive logic can be specified as the relatively more positive potential level of a two-state (binary) signal and is defined as being in the "1" state.

Figure 9-5 shows a typical 2-input NAND gate widely used in the No. 1 ESS. In this gate circuit resistance R2 provides a source of current which can be directed into the base of transistor Q or through either diode CR1 or CR3, depending upon the levels of the input signals.

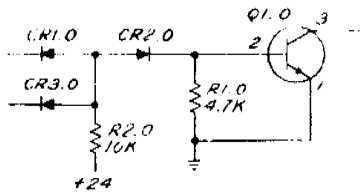

Figure 9-5 2-Input NAND Gate

If both inputs are at a potential above +4V, the current will flow into Q1 and cause it to conduct (ON) and keep the output below +0.5V. If either input is below +0.5V, the current will NOT flow into Q1 due to the voltage threshold provided by CR2 and the base emitter diode of Q1. In this condition Q1 is not conducting and the output is at a potential determined by the external load.

Diode CR1 also provides the turn-off time of Q1 by causing a large reverse base drive current when switching Q1 from its conducting to nonconducting state. Resistor R1 improves the noise and voltage threshold margins by reducing the dc impedance at the base of Q1 during its nonconducting state.

TCI Library: www.telephonecollectors.info

Physically these circuit elements are mounted on printed wiring boards to form plug-in units; collectively they are called circuit packs. Also, they are abbreviated CPS which indicates Circuit Pack Schematic.

The AND-NOT gate can be used as a universal gate for logic and memory applications and is capable of realizing any switching function. For example, when two gates are connected as shown in Figure 9-6 a bistable or flip-flop condition is created. For instance, assume that inputs S and R are both high and that the circuit is in the reset state (output 0 high, output 1 low). Since both inputs of the S gate are high, its output is low; this in turn keeps one of the inputs of the R gate low and insures that its output is high. Thus, the flip-flop is stable in the reset state.

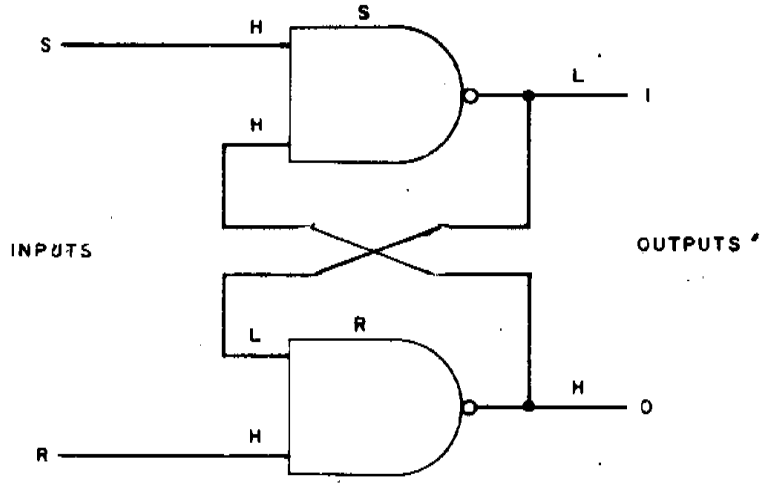

Figure 9-6 LLL Flip-Flop Gates

If the S input goes momentarily low, the output of the S gate goes high. This causes the output of the R gate to go low because both of its inputs are now high. Since the low output of the R gate is fed back to the input of the S gate, it insures that the output of the latter stays high even when the S input goes high again. The flip-flop is now stable in the set state. It will remain in this state until the R input goes low.

E. MAGNETIC CORES

In recent years magnetic cores have been used extensively in memory systems. They have also been employed to a lesser extent in logic circuits.

TCI Library: www.telephonecollectors.info

The cores generally used are ferromagnetic toroids and consist either of ceramic ferrite material or of ultra thin metallic tape wound on a nonferromagnetic spool. The distinguishing feature of these cores is a nearly rectangular or "square" hysteresis loop as shown in Figure 9-7.

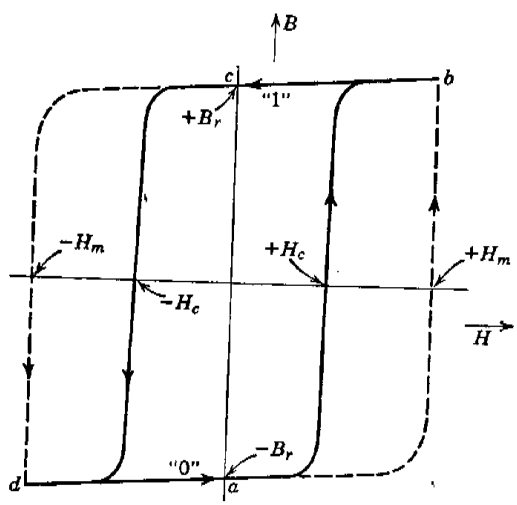

Figure 9-7 Hysteresis Loop of a Switching Core

In order to switch a core, that is, change its position on the hysteresis loop, it is necessary to exceed a certain threshold of applied magnetizing force. Referring to Figure 9-7, if a magnetizing force is slowly varied between +Hm and -Hm and back again, the flux density variation is that indicated by the solid line. It is possible to operate the core in this manner when inputs to the core are changes of voltage levels. In practice, however, inputs to the core are almost always in the form of pulses. The positive value of the remanent flux +Br corresponds to the 1 state and the 0 state corresponds to the negative value of the remanent state -Br. The 0 state is marked by a and the 1 state is marked by c.

If the core is in 0 state and receives a pulse of short duration having a maximum magnetizing force of +Hm the core will be driven to a positive value of flux density indicated by point b. The path taken between points a, b depend upon the shape of the pulse.

If the variation of the magnetizing force is slow the path is that indicated by the solid line; if the variation of the magnetizing force is fast the path taken is that of the dotted line. Under practical conditions the path will lie somewhere between the two limits.

TCI Library: www.telephonecollectors.info

Magnetic cores can perform functions of memory and logic. That the core has "memory" is indicated by its inherent characteristic to remain magnetized to saturation in either the positive or negative direction in the absence of a magnetizing force.

9.3 PROGRAM STORE

The program store (PS) is a random access semipermanent memory used in the No. 1 ESS. The capacity of the store is 131.072 readout words of 44 bits each. Cycle time to reach any word is 5.5 usec. The information in the store consists of programs and other data which are used to process calls, translate line and trunk information and carry out maintenance procedures and diagnostic tests in the system. The number of PS's required varies from 2 to 6.

The program store uses twistor modules as the basic storage block. Stored information is in the form of magnetized or demagnetized small bar magnets on removable aluminum cards. The information is semipermanent in that it cannot be changed by any operations in the store including power shut off. To change the information the cards must be removed from the store and the new pattern recorded by means of a card writer.

A. APPARATUS ELEMENTS

1. Memory Cards

Information is stored in the form of bits (0's or 1's) by magnetizing or demagnetizing small bar magnets mounted on aluminum memory cards. A memory card is shown in Figure 9-8; its dimensions are 6-5/8 by 11-1/4 inches.

Each card stores 64 words, each consisting of 44 bits. A 45th bit in each word location is not used for data storage. The 1A memory module holds 128 memory cards. The entire PS includes 16 memory modules. The distribution of words in the program store is summarized below:

1 memory card	64 words (44 bits each)
1 memory module (128 cards)	8,192 words
1 program store (16 modules)	131,072 words

TCI Library: www.telephonecollectors.info

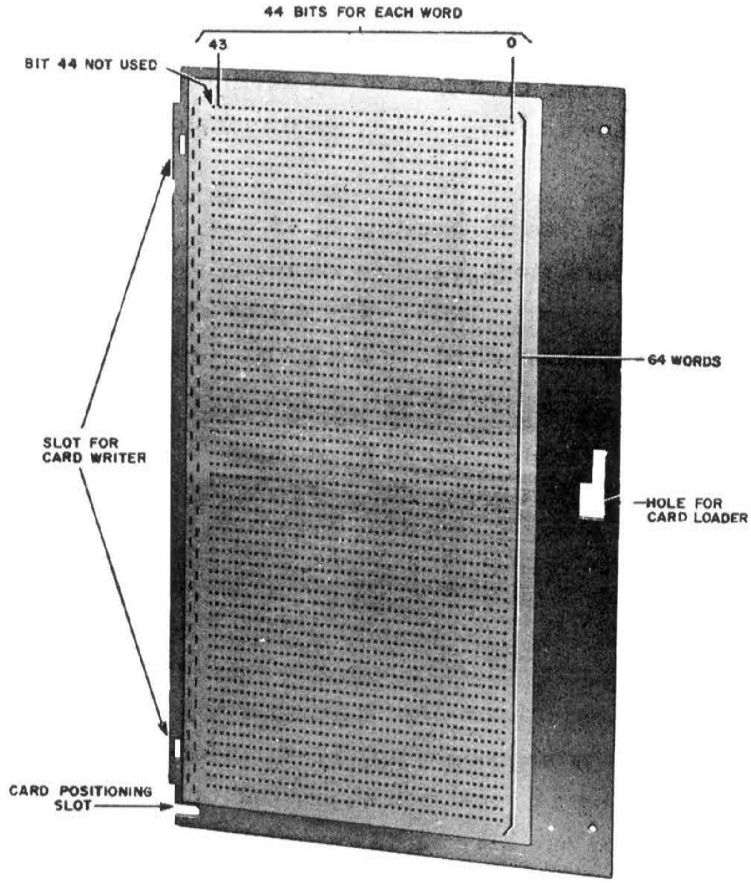

Figure 9-8 Memory Card Containing 64 Words

2. Memory Modules

A basic element of the memory module is a 3-mil copper wire that is spiral-wrapped with a thin magnetic permalloy tape; this combination is known as a twistor wire. An enlarged view is shown in Figure 9-9. A plain wire parallels the twistor wire and is paired to it by a connection at one end of both wires. This pair forms the "sensing" or readout loop for one bit of a 44-bit word. The unshorted end of the pair is connected to readout circuitry outside the memory module unit. As shown in Figure 9-10A, the readout pair is perpendicular to a single-turn copper strip solenoid which is driven by a ferrite core. A

TCI Library: www.telephonecollectors.info

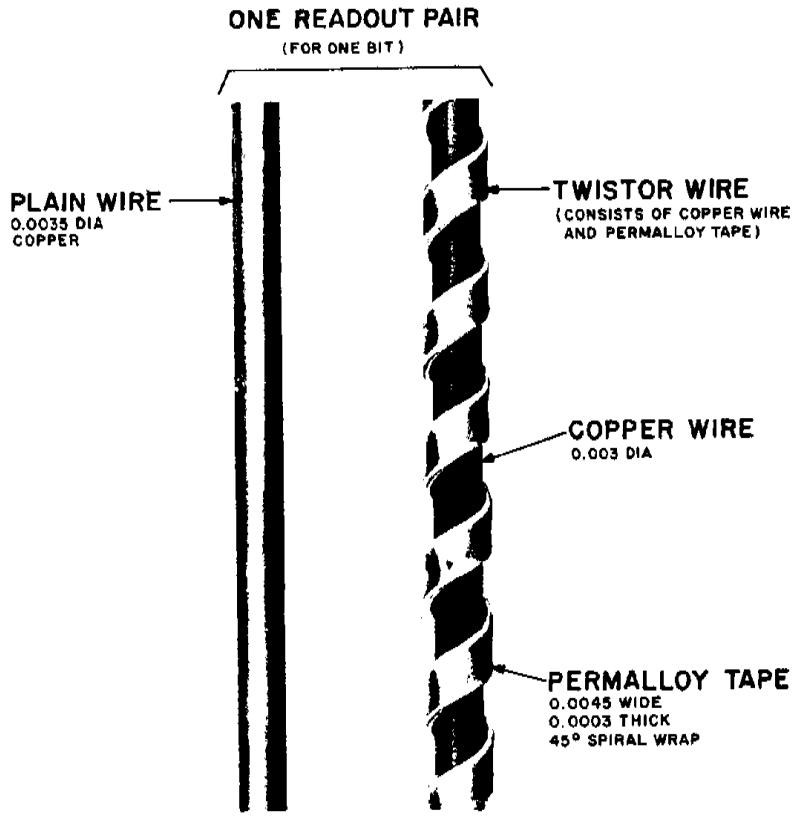

Figure 9-9 Twistor Wire Readout Pair

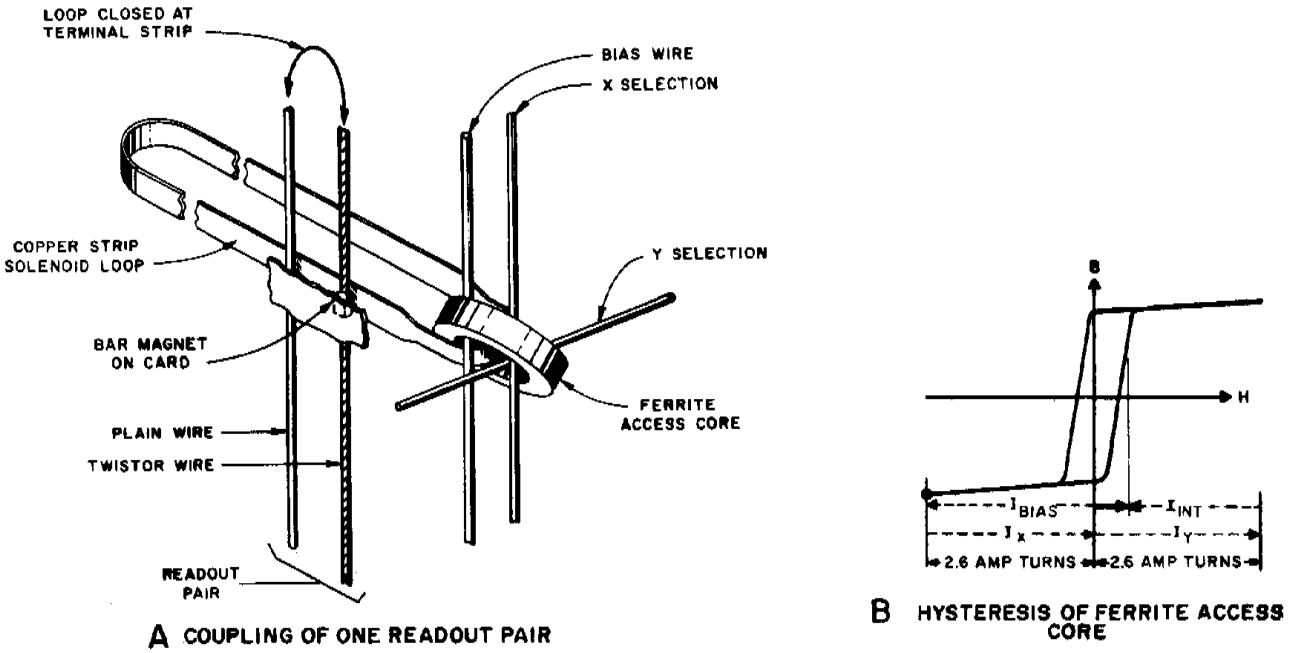

Figure 9-10 A Relationship of Currents and Magnetic Field In A Ferrite Access Core and Solenoid Loop

TCI Library: www.telephonecollectors.info

bar magnet (mounted on the metal card previously described) is placed at the intersection of the solenoid loop and the twistor wire. Both the permalloy tape and the ferrite core have square-loop magnetic characteristics shown in Figure 9-10B.

When the X and Y leads through the ferrite core are pulsed simultaneously, the combined X and Y drives exceed the continuous dc current through the bias wire. A change of flux takes place in the ferrite core and a pulse is induced in the solenoid loop. The current in the solenoid loop is used to interrogate the bit of information stored in the bar magnet. As explained in more detail in the following paragraphs, a 0 or a 1 output is obtained from the readout pair depending on whether the bar magnet has been magnetized or not.

If the magnet has not been magnetized, the readout is a 1. The permalloy tape provides a magnetic coupling between the solenoid loop and the twistor wire. The interrogating pulse in the solenoid loop induces a pulse in the twistor wire by switching the magnetic flux in the portion of the permalloy tape at the intersection of the twistor wire and the solenoid strip.

When current is removed from the X and Y leads, the ferrite core is restored to its initial magnetic condition by the dc current through the bias wire. The pulse induced in the solenoid loop is opposite in direction to the previous interrogate pulse. Consequently, the portion of permalloy tape at the intersection of the twistor wire and the solenoid strip is switched back to its initial magnetic polarity.

If the memory card magnet has been permanently magnetized, the readout from the twistor pair is a 0. The magnetic field due to the interrogate current in the solenoid loop merely aids the stronger field due to the magnetized bar magnet. Consequently, at the intersection of the twistor wire and the solenoid loop, the permalloy tape retains its initial magnetic polarity, and no voltage is induced in the twistor wire. When the ferrite core returns to its original condition, the pulse induced in the solenoid loop

TCI Library: www.telephonecollectors.info

generates a magnetic field which is opposite to, but weaker than, the field due to the magnet. The permalloy tape retains its initial magnetic polarity.

The solenoid current is approximately 1.8 amperes for a duration of 2 usec. A 1 readout in the twistor wire is about 0.6 millivolts.

When a memory card is in place in a module, there are 64 solenoid loops associated with it, one for each row of 45 bar magnets. A pulse in a solenoid loop interrogates simultaneously the corresponding row of 45 magnets on the card.

A preassembled view of a plane of 64 solenoid loops is shown in Figure 9-11. The 64 solenoid loops are encapsulated in an insulated tape which is cemented over a permalloy sheet mounted on each side of the solenoid plane. The permalloy material improves the magnetic coupling between the solenoid loops and the twistor wires. Each solenoid loop parallels a word row of 45 memory magnets when the cards are in place.

There is a separate readout pair for each magnet position in a word row. Each readout pair crosses the same bit position in each of the sixty-four words on the card. The 45 readout pairs (one for each bit) are embedded in a flexible insulated tape. The readout pairs and the interrogating solenoid loops are arranged in a cross-gridded pattern. A miniature bar magnet is located at the intersection of a solenoid loop and a twistor wire when a memory card is properly inserted and positioned.

There are 65 "initializing" permanent magnets in two rows at one edge of the card. These permanent magnets are poled opposite to the memory magnets and are located between memory magnet rows. They are used to give an initial magnetization to the twistor wire permalloy wraps between the magnet rows. This magnetization occurs as the initializing magnets pass over each twistor wire when the cards are inserted in the memory module. Setting up this magnetization results in improved readouts. The initializing magnets are also used in the external card writing operation to control the timing of the row-by-row magnetization of each memory card.

TCI Library: www.telephonecollectors.info

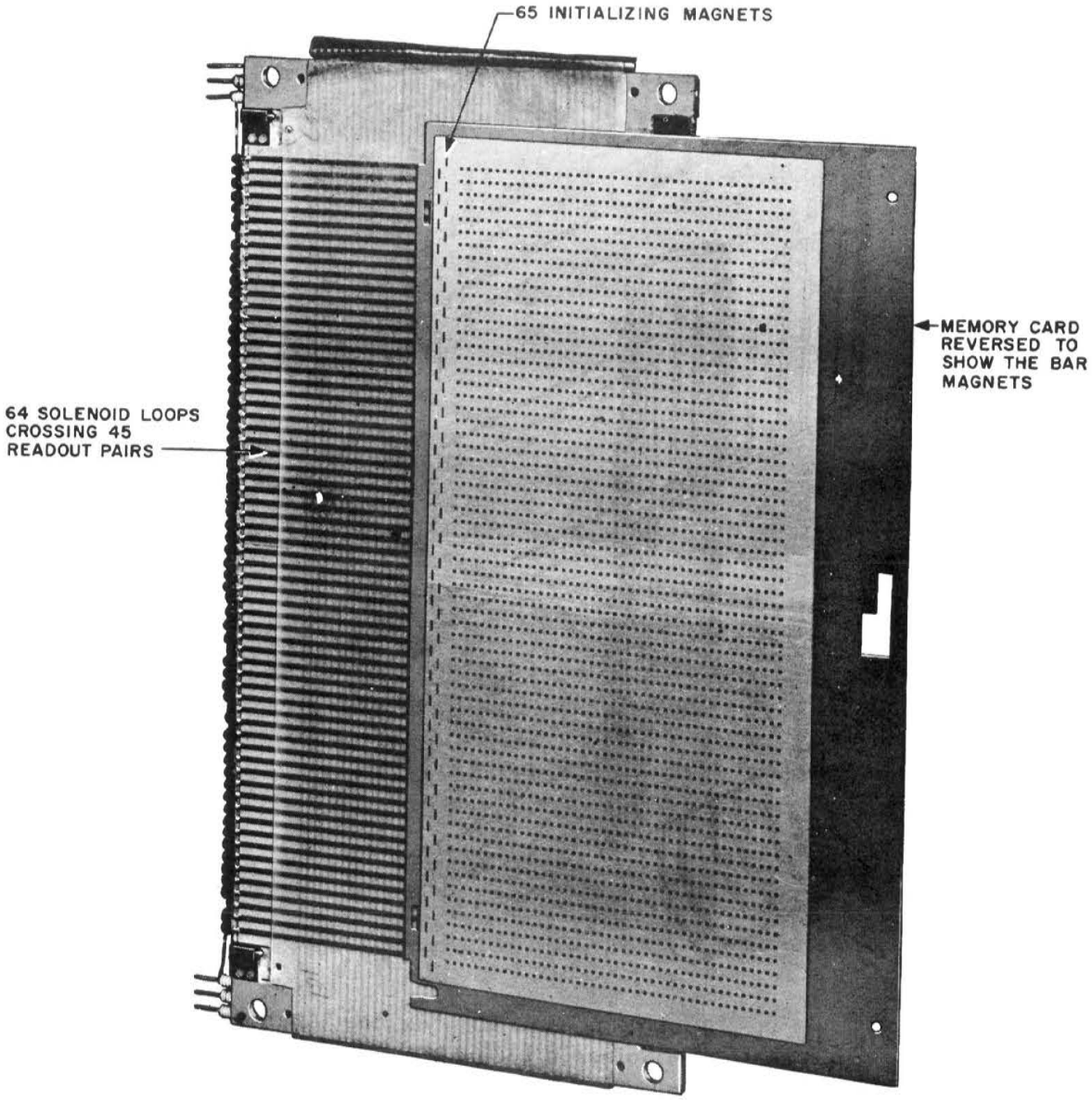

Figure 9-11 Relationship of Bar Magnets, Readout Pairs, and Solenoid Loops (Preassembled View)

TCI Library: www.telephonecollectors.info

When the cards are in place in the module, there are two memory cards associated with each solenoid plane. There is one memory card on each side of a solenoid plane; therefore, 64 solenoid planes are used to read 128 cards in each module.

There are also two separate 45-pair readout tapes, A and B, one on each side of a solenoid plane. The pulsing of one solenoid loop results in the interrogation of two 44-bit words at the same time. One 44-bit word is located on the right card; the other word is on the same row in the left card. However, only one word is sent to central control as specified by the address received by the program store.

B. MEMORY DUPLICATION

The 16 twistor modules of a program store are divided into two halves of 8 modules each. When viewed from the card inserting side of the program store frame the 8 modules on the left are called the H half and the 8 modules on the right, the G half. Each half of each program store is assigned a unique binary "name" containing two 1's and two 0's, such as 0110. This name is established by means of appropriate cross-wiring at the time of installation. A word to be read out is uniquely identified by the following information from central control:

(a) A 4-bit name code which specifies the store half that contains the word

(b) A 16-bit address which identifies the desired word among the 65,536 contained in the specified half-store.

Identical names are assigned to the duplicate information blocks in the G half of one store and the H half of another store as shown in Figure 9-12B.

Normal nonmaintenance programs are written without considering duplication. In a 4-store office, although there are actually four pairs of duplicate information blocks (0_H, 0_G; 1_H, 1_G; 2_H, 2_G; and 3_H, 3_G), the programs "see" only the four unduplicated blocks shown in Figure 9-12A. Assume that a program wants to read the word A in block 1. As shown in Figure 9-12B, there are actually two copies of this word available, one copy a_G in PS 0, and the other copy

TCI Library: www.telephonecollectors.info

a_H in PS 2. CC identifies word a by means of a 20-bit address which is divided into a 4-bit name code K to specify information block 1 and a 16-bit address A to specify the word within information block 1. The name code K and the address A are transmitted by CC on both buses to all the PS's. However, only PS 0 and PS 2 will detect a match between the name code and a name internally assigned. As a result, only these two stores will use the address A. Within each of the two stores, the 16-bit address A received from the buses is supplemented by a seventeenth bit A_{16} to select the appropriate half store. In the example considered, PS 0 generates an $A_{16} = 1$ in order to locate the word a_G; PS 2 generates an $A_{16} = 0$ to locate the word a_H.

The basic 44-bit program store word in always organized into 7 checking bits and 37 information bits as shown in Figure 9-13A.

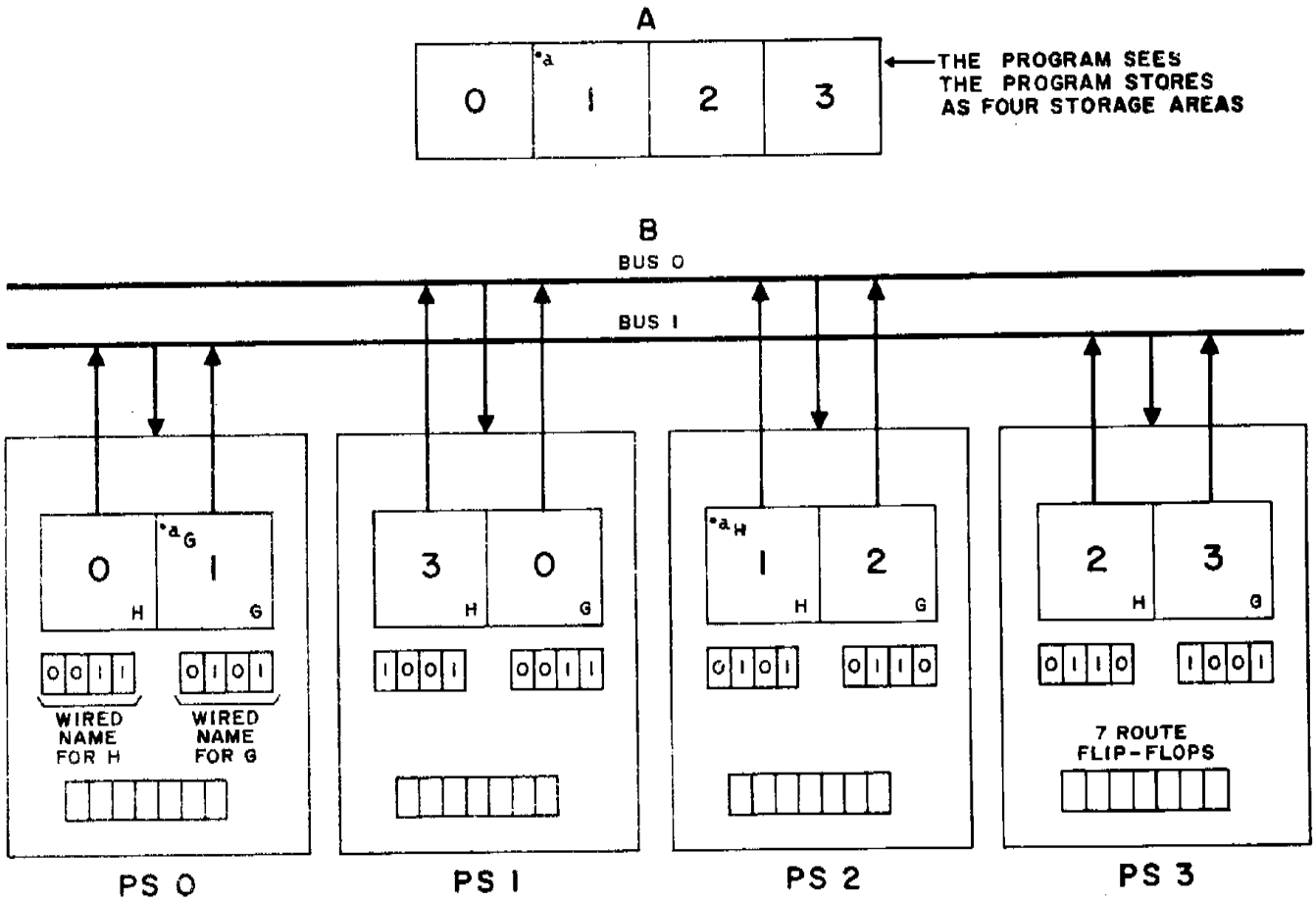

NOTE: BOTH THE H-HALF AND G-HALF OF EACH STORE HAVE A WIRED NAME.

Figure 9-12 Program Store Names and Route Flip-Flops

TCI Library: www.telephonecollectors.info

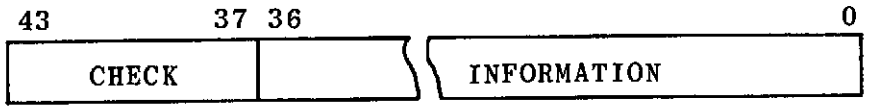

Figure 9-13A Basic Program Store Word

PROGRAM STORE ADDRESS STRUCTURE																							
Ø. DIGIT																							
BINARY CODE																							
BIT POS ON BUS.	E21	E20	E19			E16	A15		A13	A12	A11				A6	A5						A0	
FUNCTION					MOD IN 1/2 STORE					0=R 1=L	CARD IN A 1/2 MODULE					WORD ON A CARD							
	PROGRAM STORE																						
					0=H 1=G																		

Figure 9-13B Locating a Word in Program Store

TCI Library: www.telephonecollectors.info

C. ADDRESS STRUCTURE

The program store address structure is shown in Figure 9-13B. The addressing scheme used to select a single program store word uses twenty bits. These twenty bits originate from the central control program address register (PAR) and are pulsed out to a program store over the central control to the program store bus system. A component translating circuit of the PAR alters the four most significant bits of an address into a two out of four code called the K code. The resultant four bits appear on bus lead pairs E19 to E16 and must match the corresponding K code name wired into the program store half that contains the word to be selected. The PAR can be arranged for six bit selection of program stores in which case the K code would become a two out of six code and would be displayed as bits E21 to E16 in the PAR. If the K code derived from the address has a 0 bit in position E16 and H half will be selected, a 1 bit selects the G half. The next three bits (A15 to A13) are used to select the module location (all 0 bits equal module 0 while all 1 bits equal module 7) within the Program Store half. The following bit (A12) is used to determine which readout tape will be used the A side (Left) or the B side (Right). If this bit is 0 the B tape reads the right hand memory cards and if the bit is a 1 the A tape will read the left hand cards. Each module has 128 memory cards with the cards numbered 0 to 63 on the right and 64 to 127 on the left. The following six bits (A11 to A6) will select one of the 64 cards and the last six bits (A5 to A0) will select one of the 64 Program Store words on a card. Word 0 is located at the bottom of the card while word 63 is located at the top.

D. BUS INPUT AND OUTPUT CONTROL

Seven flip-flops within each PS control the inputs and outputs to and from the buses. These flip-flops operate as follows. A flip-flop R0 allows the store to receive only from bus 0, if set; from bus 1, if reset. Two flip-flops, HS0 and HS1, determine whether the normal readouts from the H half shall be sent on bus 0 and/or bus 1. These readouts can be sent on bus 0 if HS0 is set; on bus 1 if HS1 is set. Similarly, two flip-flops GS0 and GS1 determine whether the normal readouts from the G half shall be sent on bus 0 and/or bus 1. Two trouble flip-flops TBL0 and TBL1, when set, disable both input and output communications between the PS and buses 0 and 1, respectively.

TCI Library: www.telephonecollectors.info

The selection of input and output buses under normal conditions with an even number of program stores is shown in Figure 9-12B, Bus 1 supplies the address and receives the readout for a word such as a_G in PS 0. Bus 0 supplies the address and receives the readout for the duplicate copy a_H. The same applies to all the other information blocks. This is also true for an odd number of program stores except for the highest numbered pair of H and G information blocks, both of which take the address from bus 0.

E. BASIC MEMORY UNIT

The decoder shown in Figure 9-14 compares the name code received with the names assigned to the two halves of a store. If a match is found, the decoder generates a seventeenth address bit A_{16} which is 0 for the H half, 1 for the G half. The complete address is stored in the address register to be used by the access circuits which select one

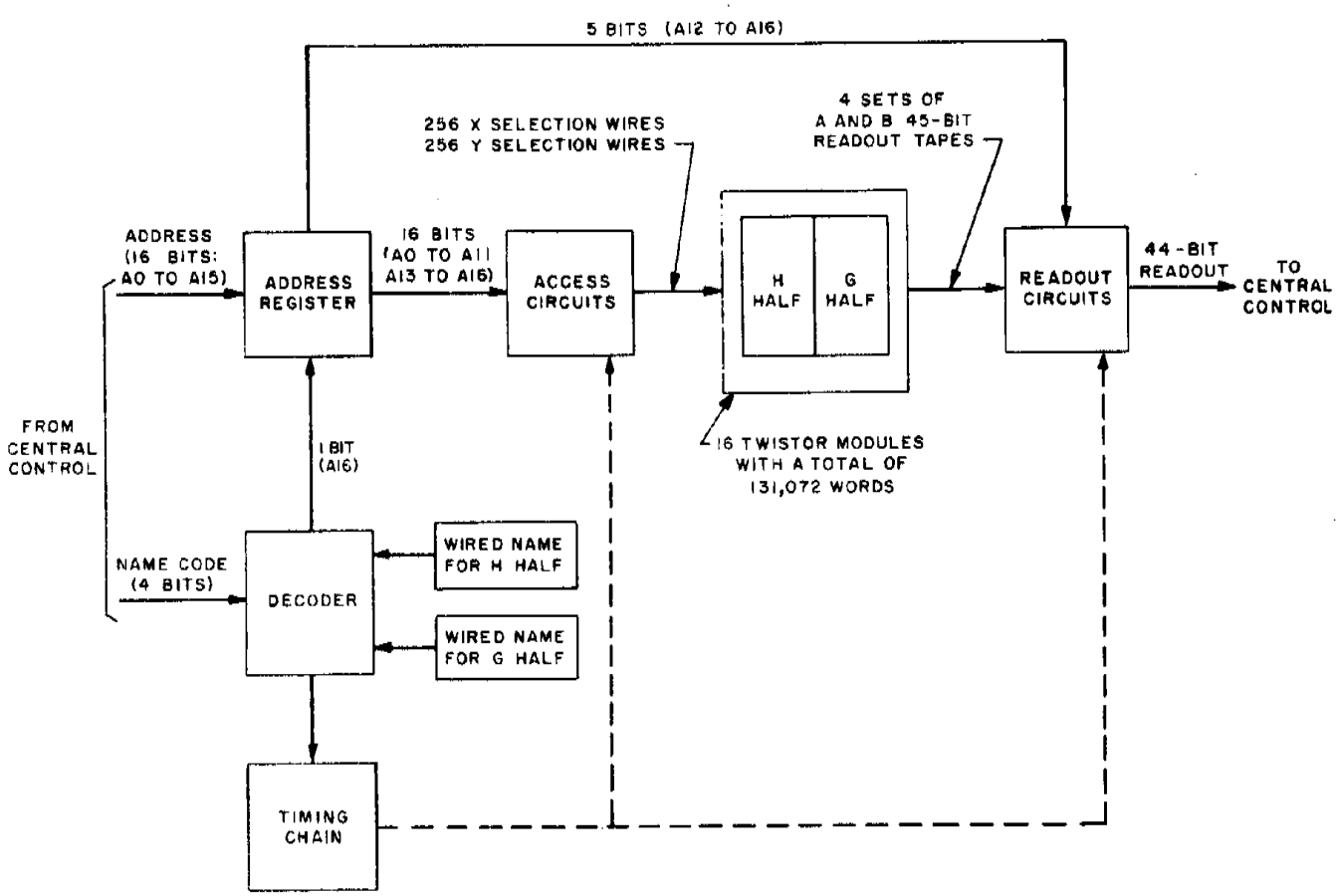

Figure 9-14 Basic Memory Unit

TCI Library: www.telephonecollectors.info

and only one ferrite access core. This is done by pulsing one of 256 X selection wires and one of 256 Y selection wires. The magnetic flux of the selected access core is changed and a pulse is induced in the associated solenoid loop. This pulse interrogates simultaneously two 44-bit words on two cards causing simultaneous readouts into two sets of readout loops which are fed to the readout circuits. Here a selection is made between A and B readouts on the basis of address bit A_{12} and a 44-bit output is generated for transmittal to the CC. An all-seems-well bit and a synchronizing bit are also transmitted to CC.

F. ACCESS CIRCUITS

Figure 9-15 shows schematically how the selection of a single access core is achieved through the use of electronic switches. The 16 Y upper access switches (YUAS) on the left

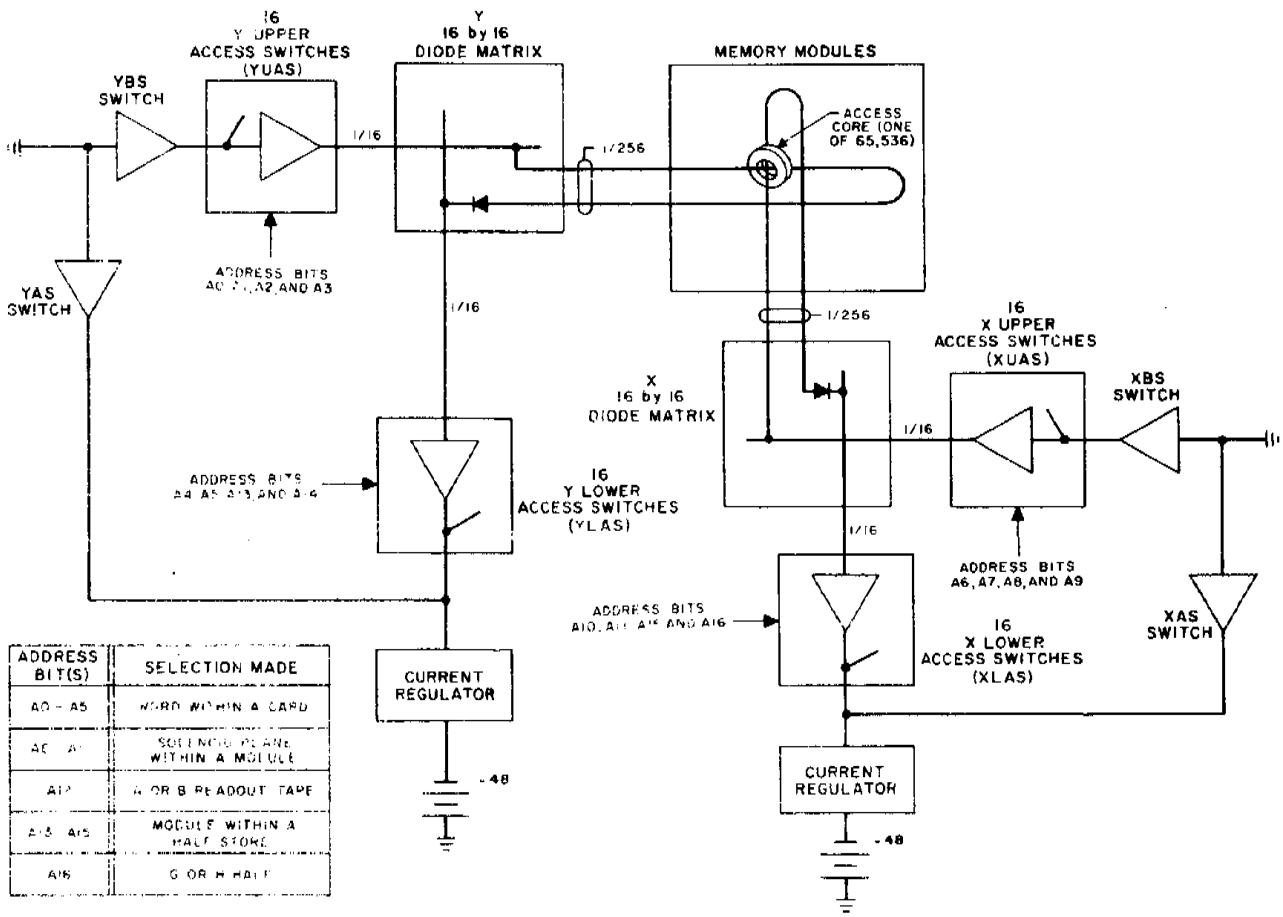

Figure 9-15 Method of Selecting a Single Access Core

TCI Library: www.telephonecollectors.info

are controlled by the 16 possible combinations of the four address bits A_6 to A_9. Current can flow through only one YUAS as selected by the four address bits. Similarly, only one of 16 Y lower access switches (YLAS) is closed. In the Y diode matrix, current can flow in only one of 16 horizontals and one of 16 verticals (the diodes eliminate the possibility of sneak paths). Thus, only one of 256 Y wires is pulsed. Similar considerations apply to the selection of one of 256 X wires. When a selection is made, the YAS and XAS switches open. This transfers the regulator current to the selection circuits. When the selection is completed, the normally closed YBS and XBS switches open, the YAS and XAS swithces close, and the current again is shunted to ground. Once the current transfer is completed, the YBS and XBS switches reclose. (All the upper and lower switches are now open.)

G. READOUT CIRCUITS

As shown in Figure 9-16, the A and B readout pairs of four similarly numbered modules are connected together to form a common output to a selector. Each readout pair is shorted at a terminal strip at one end of each module. Of the eight sets of readout pairs, only one is detected on the basis of bits A_{12} to A_{16}. With the arrangement described, when a readout takes place in one module, no X or Y current is present in any other module wired to the same readout pairs. This reduces the noise effects of an X or Y current on the selected readout.

H. MODES OF OPERATION

The main function of the program store is to supply the binary coded information necessary to operate the system. In addition to providing the system program, other modes of operation are necessary for diagnosing troubles within the store and to change the states of various operating conditions.

The address from central control to the program store via the address bus consists of 25 bits. These 25 bits indicate what type of operation the store is to perform, which store or stores are to respond, and the location of the information within the store. The input word structure is one sync bit, four K code bits, four mode bits, and 16 address bits.

TCI Library: www.telephonecollectors.info

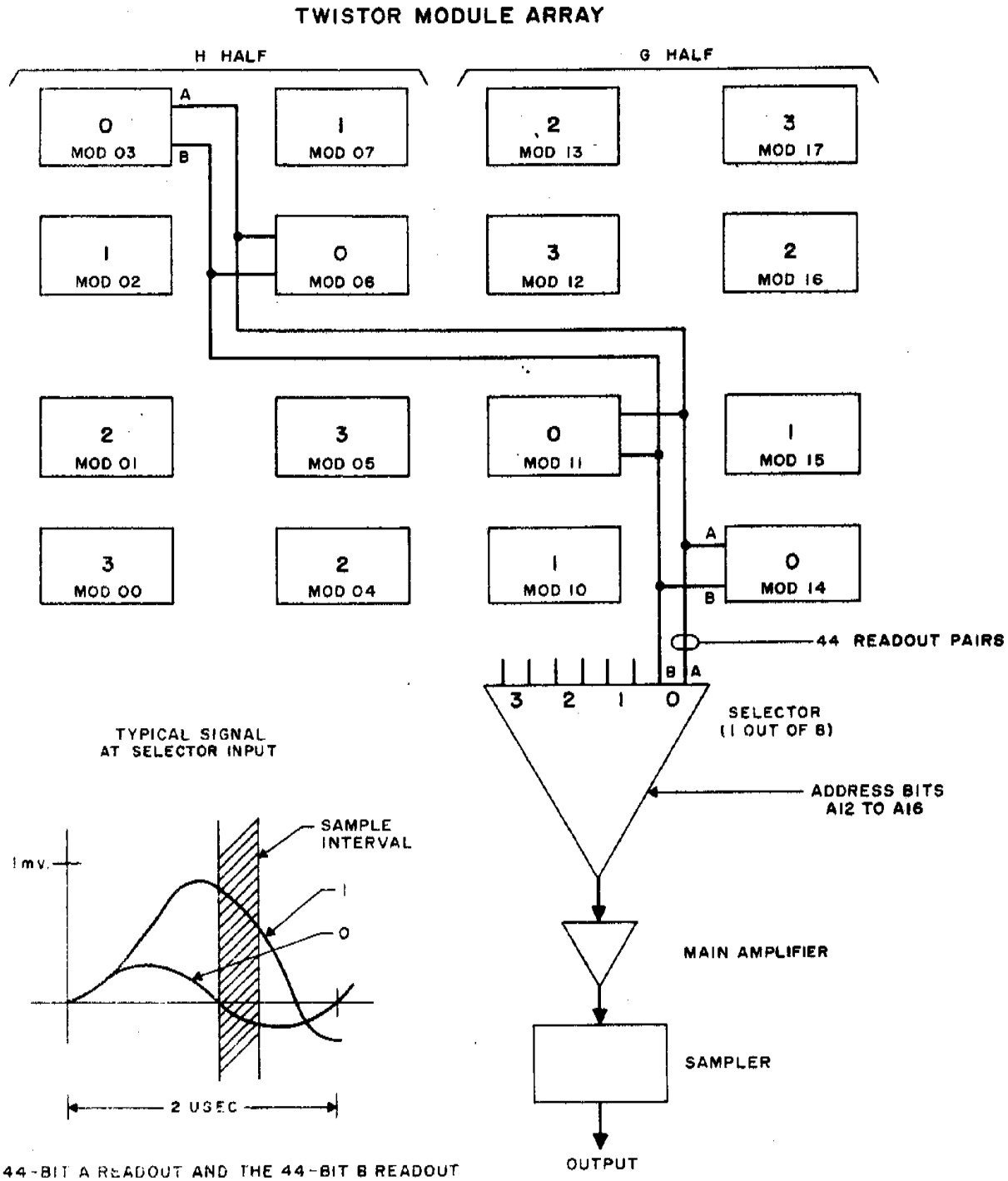

NOTE: THE 44-BIT A READOUT AND THE 44-BIT B READOUT ARE EACH CONNECTED IN PARALLEL WITH SIMILAR READOUTS FROM SIMILARLY NUMBERED MODULES. FOUR MODULES ARE CONNECTED TO THE SAME OUTPUT PAIRS IN EACH WIRING PATTERN.

Figure 9-16 Program Store Readout Connections

TCI Library: www.telephonecollectors.info

1. Normal Mode

This mode is used during the routine operation of the central office when central control is obtaining program and translation information from the program store twistor modules. In a normal mode, the choice of address buses to receive on and the choice of answer buses to send on are completely flexible. The program stores are divided into two halves designated H and G. In a central office the information in the H-half of one store will be duplicated in the G-half of another store. During a normal mode, if all systems are functioning properly, two program stores will answer an address sent by central control; one from the H-half of one store and one from the G-half of another store. The information is the same from either store. The address sent to the two program stores can be sent on one bus or on separate buses, but each program store must answer on separate buses.

2. Maintenance Mode

This mode differs from a normal mode in that only one half of one store will respond to the address. In addition, the particular store designated in the maintenance mode will answer on the same bus on which it has received the address. In a maintenance mode the program store delivers a normal twistor readout, but the readout is used for diagnostic checks rather than for system instructions. For example, if an access switch is faulty, central control may instruct the program store to roster through a number of addresses to determine which ones are reading incorrectly and thereby locate the faulty access switch.

There are two maintenance modes, H maintenance and G maintenance. H maintenance instructs the program store to send the information requested in the address from the H side of the store. The G maintenance designates the information be sent from the G side of the program store.

TCI Library: www.telephonecollectors.info

3. Control Mode

In order to allow the system to observe or evaluate conditions within the program store and to permit these conditions to be altered a control mode is provided. The control mode is subdivided into a read control and a write control mode. No access or twistor readout occurs during a control mode.

a. Read Control Mode

For the system to perform its diagnostic tests on the program store, it is necessary to know the status of a large number of points internal to the store. This information can be sent to central control via the bus pairs in the read control mode. The points checked consist of such things as the state of flip-flops, gates, timing packages, and any other conditions needed to locate troubles in a store. During a read control mode there is no drive supplied by the access to the twistor modules and therefore no memory readout. Instead the readout word normally sent to central control is replaced by a word composed of 44 read control bits. To increase the number of read control bits which can be sent, there are four groups of 44 bits, any group of which can be read out during a cycle. Thus, theoretically, the number of available read control bits is increased to 176. Actually only 160 bits can be used since the last four bits of each group are used to indicate which group is being read out. The groups of read control bits are called rows. The bus selection in a read control mode is identical to that of a maintenance mode; the program store must answer on the same bus on which it has received the address.

b. Write Control Mode

The write control mode permits central control to set up a desired set of conditions in the store via the address bus pairs. In a write control mode, no readout occurs from the program store. The function of a write control can be for either diagnostic purposes or the normal changing of routing for example, the

TCI Library: www.telephonecollectors.info

routing of the program store buses. Since there are a number of functions the write control can perform, a steering bit is sent with the write control address to instruct the program store which condition to institute.

Generally, a cycle in the write control mode is followed by a read control to verify that the locations were actually written as specified by the write control mode.

Besides the internal points in a program store that are written by the write control mode there are internal points which are controlled directly by the central pulse distributor. This allows the system to maintain some control over a program store in the event of bus or store failure.

There are also internal points called scan points which are not read out by the read control mode. The scan points are handled in two ways. Part of them are permanently connected to the master scanner. The remainder of them can be connected to the master scanner through the monitor bus. The scan points that are permanently connected to the master scanner are critical circuit points that need continuous monitoring. Connection to the other scan points through the monitor bus is slow but makes it possible to diagnose troubles independent of the program store and the communication buses. Also, for some of the points in the store it is just not practical to monitor in any other manner.

There will be times when a program store will have to be brought back into service after it has been out of operation. Central control will try to do this automatically through the emergency alarm bus. If central control fails then the program store is put in operation manually. The manual control is done at the master control center. The master control center communicates to the store via the override leads.

TCI Library: www.telephonecollectors.info

9.4 CALL STORES

The call stores (CS) provide a temporary, or read-write, type of memory; that is, they provide the means for recording information that later can be read, altered, or erased by the system. This temporary memory is used by the central control (CC) and the signal processors (SP). It serves to store information that is related mainly to the handling of telephone calls (hence, the name call store). The information stored in temporary memory includes:

(a) Busy-idle status of customer lines, junctors, trunks, network links, etc.

(b) Records of network terminations being used for each call in progress.

(c) Digits received.

(d) Digits to be outpulsed.

(e) Customer billing information prior to recording on the automatic message accounting (AMA) tape.

(f) Recent change information related to customer lines and trunks prior to updating the translation information in the program stores (PS).

(g) Maintenance information related to program-controlled diagnostic tests.

The information contained in a CS is organized in words of 24 bits as shown in Figure 9-17. One of these bits is used for parity checking. Each word occupies a word location uniquely identified by an address. Inputs from CC specify the operation to be performed (reading or writing), the address of the location involved, and, in the case of writing, the word to be written. The CS carries out the request and, in the case of reading, transmits to CC the word that it has read. The CS is also capable of performing special operations for control or maintenance purposes.

A single CS has 8,192 word locations, thus providing a total storage capacity of 196,608 bits. The shortest allowable time interval between consecutive store operations is 5.5 usec.

TCI Library: www.telephonecollectors.info

The number of CS's needed depends on the office size. Taking duplication into account, the maximum number of CS's associated with the CC could be 39. Where SP's are provided, each pair of SP's may have up to eight CS's. A call store frame is shown in Figure 9-18.

An example of the storage requirements for a central office with 5,000 lines and 4,500 calls per busy hour is given below:

Requirements independent of office size	3,000 words
Call processing	4,800 words
Network map	2,400 words
Maintenance and administration	1,400 words
	11,600 words (unduplicated)

Figure 9-17 Basic Call Store Word

A. APPARATUS ELEMENTS

1. Ferrite Sheet

The basic storage element in the CS is the ferrite sheet shown in Figure 9-19. The ferrite sheet is approximately one inch square and 30 mils thick. Each sheet contains 256 holes in a 16 by 16 array. The holes are 25 mils in diameter and are placed on 50-mil centers.

The ferrite sheet material (magnesium-manganese) has a square-loop magnetic characteristic (Figure 9-20). After the removal of a magnetizing drive, the ferrite material retains either a positive or a negative remanent magnetization, $+B_R$ or $-B_R$. In order to "switch" or reverse the magnetization from $-B_R$ to $+B_R$, it is necessary to apply a positive magnetizing drive that must exceed a threshold value, $+H_C$. Similarly, in order to switch from $+B_R$ to $-B_R$, it is necessary to apply a negative drive that must exceed a threshold value, $-H_C$.

TCI Library: www.telephonecollectors.info

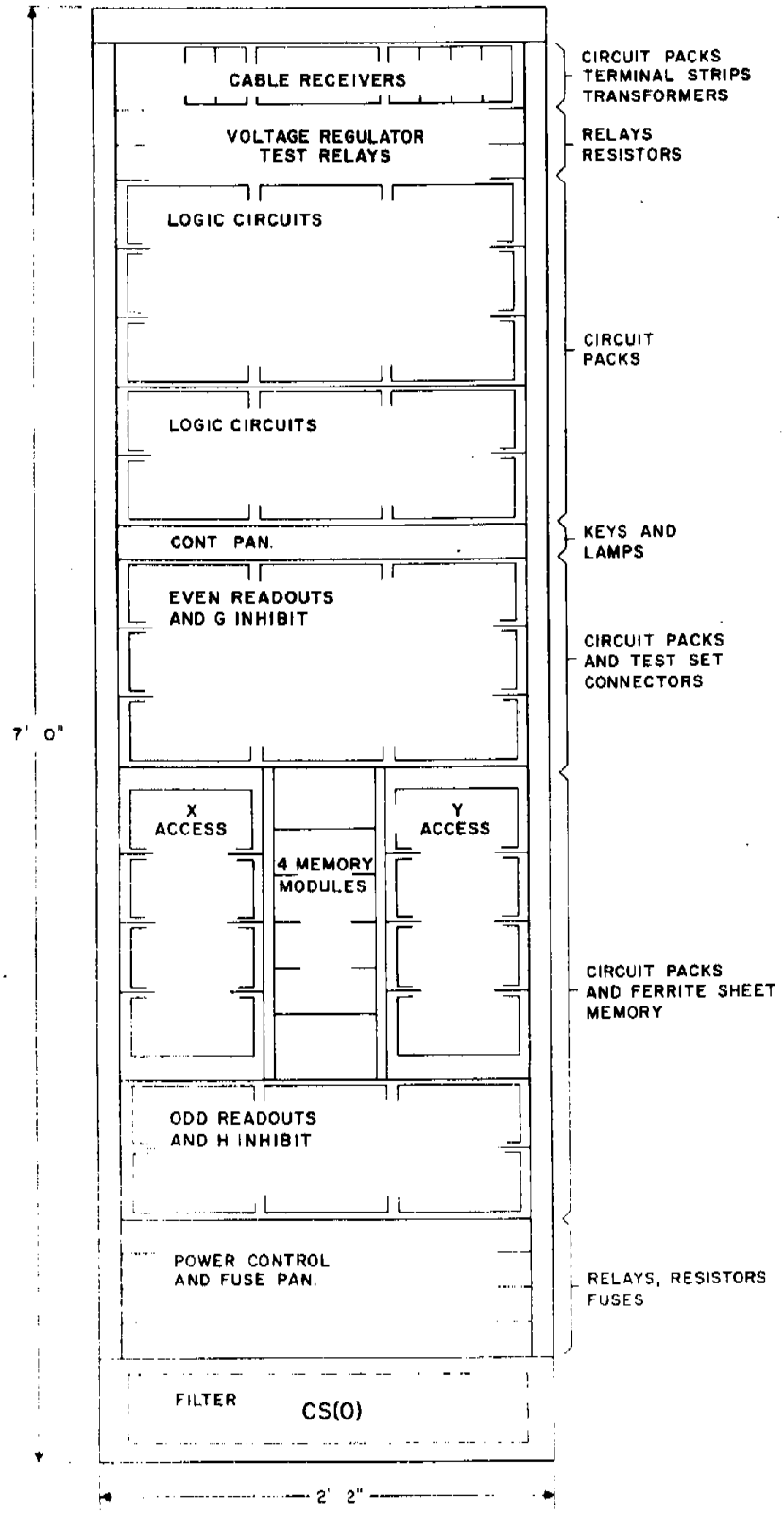

Figure 9-18 Call Store Frame Layout

TCI Library: www.telephonecollectors.info

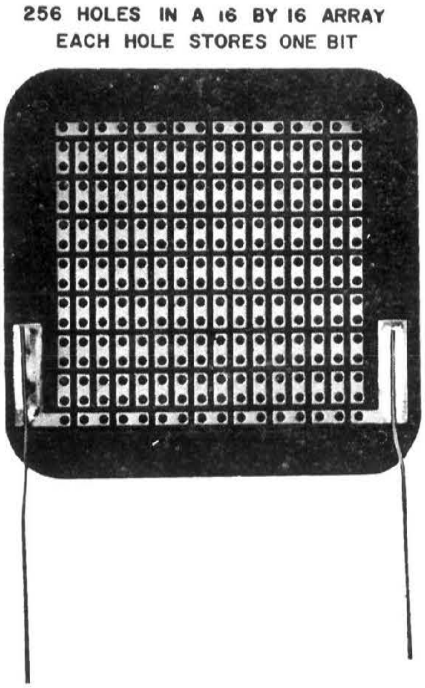

Figure 9-19 Ferrite Sheet

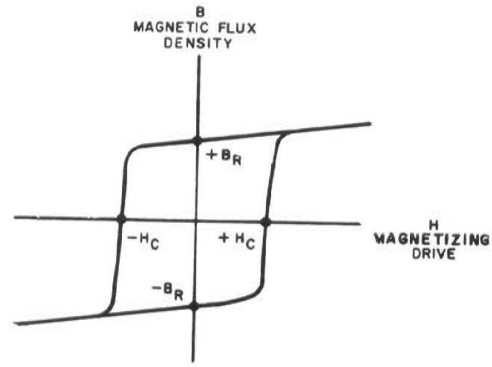

Figure 9-20 Square-Loop Characteristic

If the ferrite material is in the remanent state $+B_R$, a negligible change in magnetization results from a positive drive or from a negative drive that does not exceed H_C. This is due to the fact that the upper and lower sides of the loop are almost horizontal. Similar considerations apply when the ferrite material is in the remanent state $-B_R$ and the applied drive is negative or less than H_C.

A bit of information can be stored in the material immediately surrounding each hole of the ferrite sheet by magnetizing the material either clockwise or counterclockwise. One state of remanent magnetization is identified as the binary value 0 and the opposite state of remanent magnetization is identified as the binary value 1.

The ferrite sheet can be considered to be equivalent to an array of 256 miniature magnetic cores such as the one shown in Figure 9-21. Four wires are associated with each core: two select wires X and Y, a readout wire, and an inhibit wire.

TCI Library: www.telephonecollectors.info

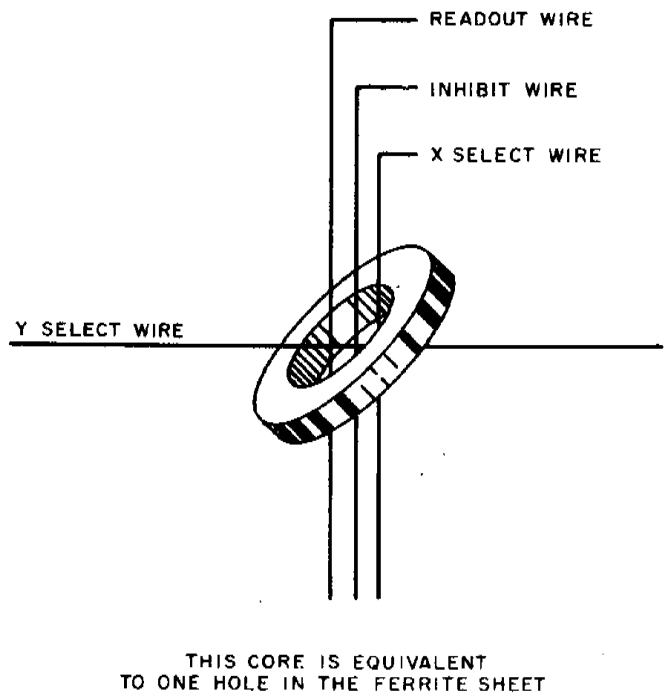

Figure 9-21 Principle of Memory Core Switching Operation

In order to read the binary content of a core, the X and Y wires are simultaneously pulsed, each with a current of 250 ma (Figure 9-22). The combined drive exceeds the threshold value and is applied in a negative direction. This drive tends to reset the core, that is, to put it in the remanent state associated with 0. If the core happens to be already in the 0 state, there is a negligible change in magnetization which results in a negligible output induced in the readout wire. On the other hand, if the core is initially in the 1 state, the combined X and Y drives cause a change in magnetization from $+B_R$ to $-B_R$. This induces an output of approximately 50 millivolts in the readout wire. Thus, the presence or absence of an output in the readout wire indicates whether the core was initially in the 1 or 0 state. Regardless of its initial condition, the core is forced into the 0 state by the reading operation. For this reason, the core is said to have a destructive readout. The information, however, will be restored into the core by writing back whatever was read out.

TCI Library: www.telephonecollectors.info

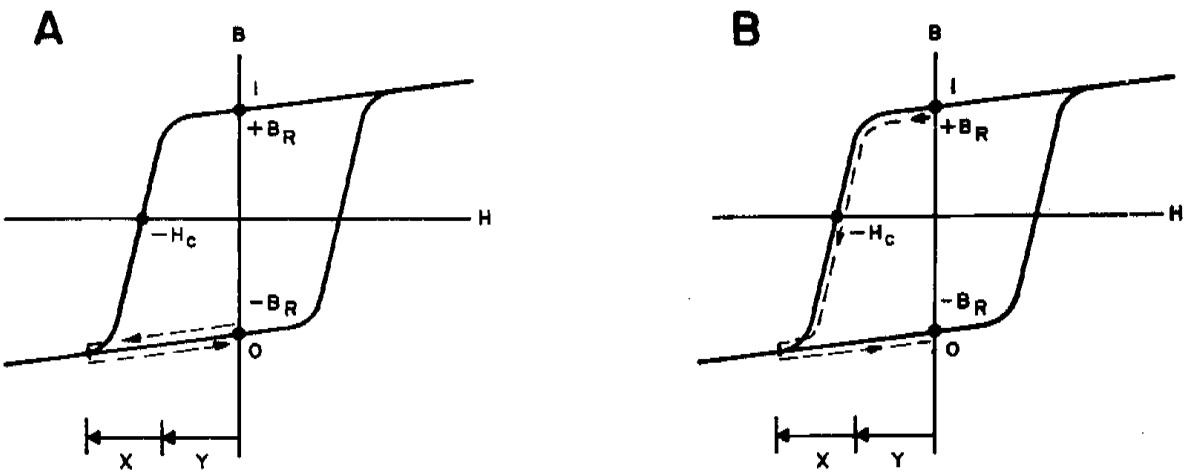

READING A 0

NO OUTPUT IS INDUCED IN THE READOUT WIRE. THE CORE REMAINS IN THE 0 STATE.

READING A 1

AN OUTPUT IS INDUCED IN THE READOUT WIRE. THE CORE CHANGES TO THE 0 STATE.

THE CORE IS INITIALLY IN THE 0 STATE AS A RESULT OF A READING OPERATION

Figure 9-22 Reading a Memory Core

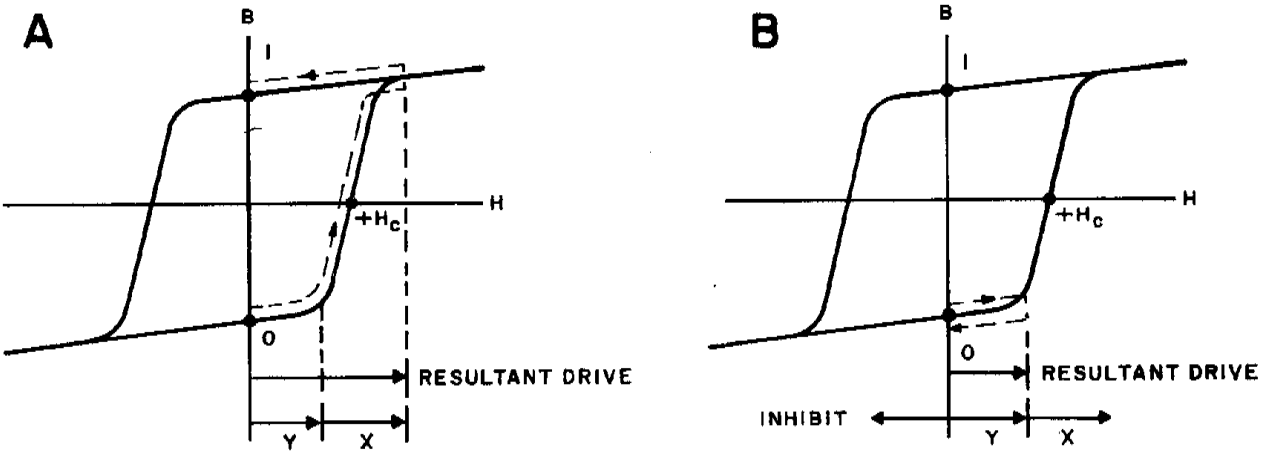

WRITING A 1

THE CORE SWITCHES FROM THE 0 STATE TO THE 1 STATE.

WRITING A 0

THE PRESENCE OF THE INHIBIT DRIVE PREVENTS THE CORE FROM SWITCHING TO THE 1 STATE.

Figure 9-23 Writing in a Memory Core

TCI Library: www.telephonecollectors.info

In order to write back a 1 (Figure 9-23A), the X and Y wires are again simultaneously pulsed, each with a current of 250 ma. The direction of the applied drive is now opposite to that used for reading. Consequently, the core is "set" or switched from state 0 to state 1. In order to write a 0 (Figure 9-23B), the X and Y wires are again pulsed in the positive direction; at the same time, the inhibit wire is pulsed in the negative direction. The combined drive due to the inhibit wire and to the X and Y wires is less than H_C. Consequently, the core is not switched and is left in state 0.

When new information is to be written into a core, a readout is performed first to force the core into the 0 state. Writing takes place then in the manner previously described. Whether a pulse is applied to the inhibit wire is determined, not by the bit that was read out, but by the bit to be written. If a 0 is to be written, an inhibit drive is applied.

B. BASIC MEMORY UNIT

As previously stated, the 8,192 word locations contained in a CS are divided into two information blocks known as the H half and the G half. Ferrite sheets of submodules 0 and 1 are in the G half and submodules 2 and 3 are in the H half. Each submodule contains 2,048 words. Each store-half has a 6-bit "name." The H half is assigned a fixed name by appropriate cross wiring at the time of installation. The G half, instead, is assigned a name by setting an appropriate combination on six flip-flops. The status of these name flip-flops can be changed under program control. This flexibility in identifying blocks of memory permits the physical location of the stored data to be changed to other call stores in case of trouble. Figure 9-24 illustrates the scheme for duplicated call store memory blocks.

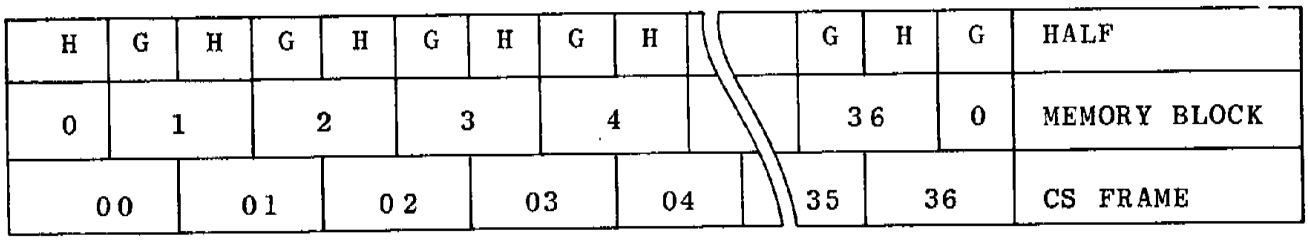

Figure 9-24 Duplicated Call Store Memory Blocks

TCI Library: www.telephonecollectors.info

The addressing scheme used to select an individual word location requires 18 bits. The 12 least significant bits are used to select one of 4,096 words and the 6 most significant bits are used as K code bits which select the memory block with the matching K code name. The bit positions of the central control to call store bus, used for addressing are identified in the call store address structure shown in Figure 9-25.

Ø DIGIT						
BINARY CODE						
BIT POS	A17 A12		A11 A00			
FUNCTION	K CODE		ONE OUT OF 4096			

Figure 9-25 Call Store Address Structure

The basic portion of a call store is shown in Figure 9-26. Within each CS, separate access circuits are provided for the G and H halves. If the name code K received by a CS matches the name of the H half or the G half, the appropriate access circuit is activated. The signals received on the order leads R and W determine whether a reading or writing operation is to be performed at the specified word location. Either operation is carried out in two stages.

1. Reading

During the first stage of a reading operation, access is gained to the desired word location by pulsing one of 64 X leads and one of 64 Y leads in the appropriate store half. The direction of the X and Y currents is such that each bit of the interrogated location is left in the 0 state. The signals from the memory modules go to the readout circuits where they are amplified and then submitted to discriminators. These determine whether each input is to be considered a 1 or a 0 and generate accordingly an appropriate output.

TCI Library: www.telephonecollectors.info

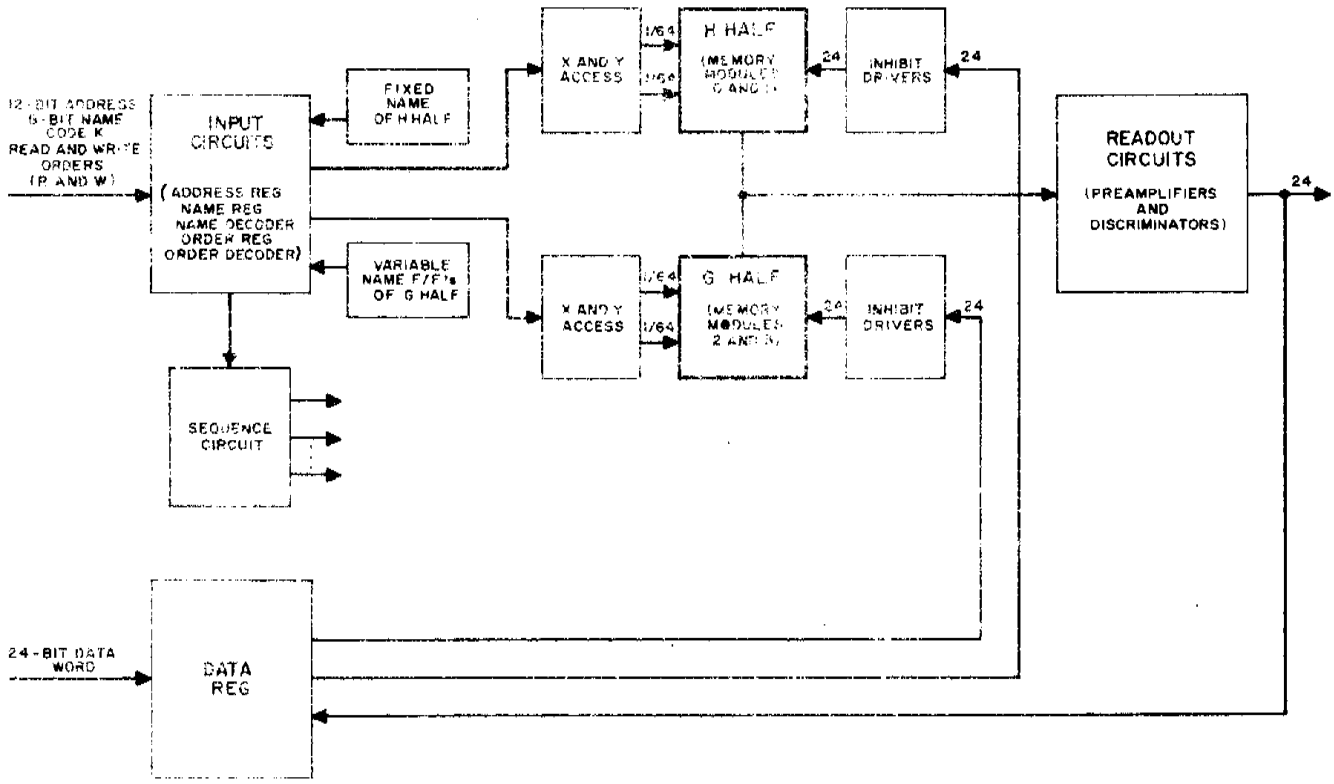

Figure 9-26 Basic Call Store

The outputs of the readout circuits in the read operation are also stored in the data register. During the second stage of a reading operation, the information read out is written back as follows. The word location previously read is again selected by pulsing the same X and Y leads but in the opposite direction. Thus, the X and Y currents tend to write a 1 in each bit of the selected word location. However, any bit of the data register that is equal to 0 activates an associated inhibit drive which applies a pulse to an inhibit wire. This prevents the writing of a 1 in the corresponding bit position.

TCI Library: www.telephonecollectors.info

2. Writing

During the first stage of a writing operation, the specified word location is read out as previously described. However, the outputs of the readout circuits are not gated into the data register. Thus, the net effect of this first stage is to clear the specified word location. The data register is set by 24 bits received via the bus from CC. During the second stage, this information is written into the selected word location in the manner previously described. The sequence control generates all the necessary timing pulses.

C. NORMAL INPUT-OUTPUT CONTROL

As previously described, each store-half information block is assigned a name of six bits. The purpose of this coding is to permit selective communication with a number of CS's using a common bus system. Figure 9-27B shows, as an example, four CS's connected to two duplicate buses. Normally, identical names are assigned to the duplicate information blocks in the G half of one store and the H half of the next store.

Nonmaintenance programs are written without taking into consideration that the information is duplicated. In the example considered, there are actually four pairs of duplicate information blocks: 0_H and 0_G, 1_H and 1_G, 2_H and 2_G, and 3_H and 3_G. However, the programs "see" only the four unduplicated information blocks shown in Figure 9-27A.

For example, assume that a program wants to read the word a in information block 1. As shown in Figure 9-27B, there are actually two copies of this word available, one copy a_G in CS 0 and the other copy a_H in CS 1. The CC identifies the word a by means of an 18-bit address which can be divided into a 6-bit name code K to specify information block 1, and a 12-bit address A to specify the word within information block 1. The name code K and the address A are transmitted by CC on both buses to all the CS's. However, only CS 0 and CS 1 will detect a match between the K code and a name internally assigned. As a result, only these two CS's will use the address A. In CS 0, the access circuit activated is that of the G half since its name matches the name code received. Similarly, in CS 1, the access circuit activated is that of the H half.

TCI Library: www.telephonecollectors.info

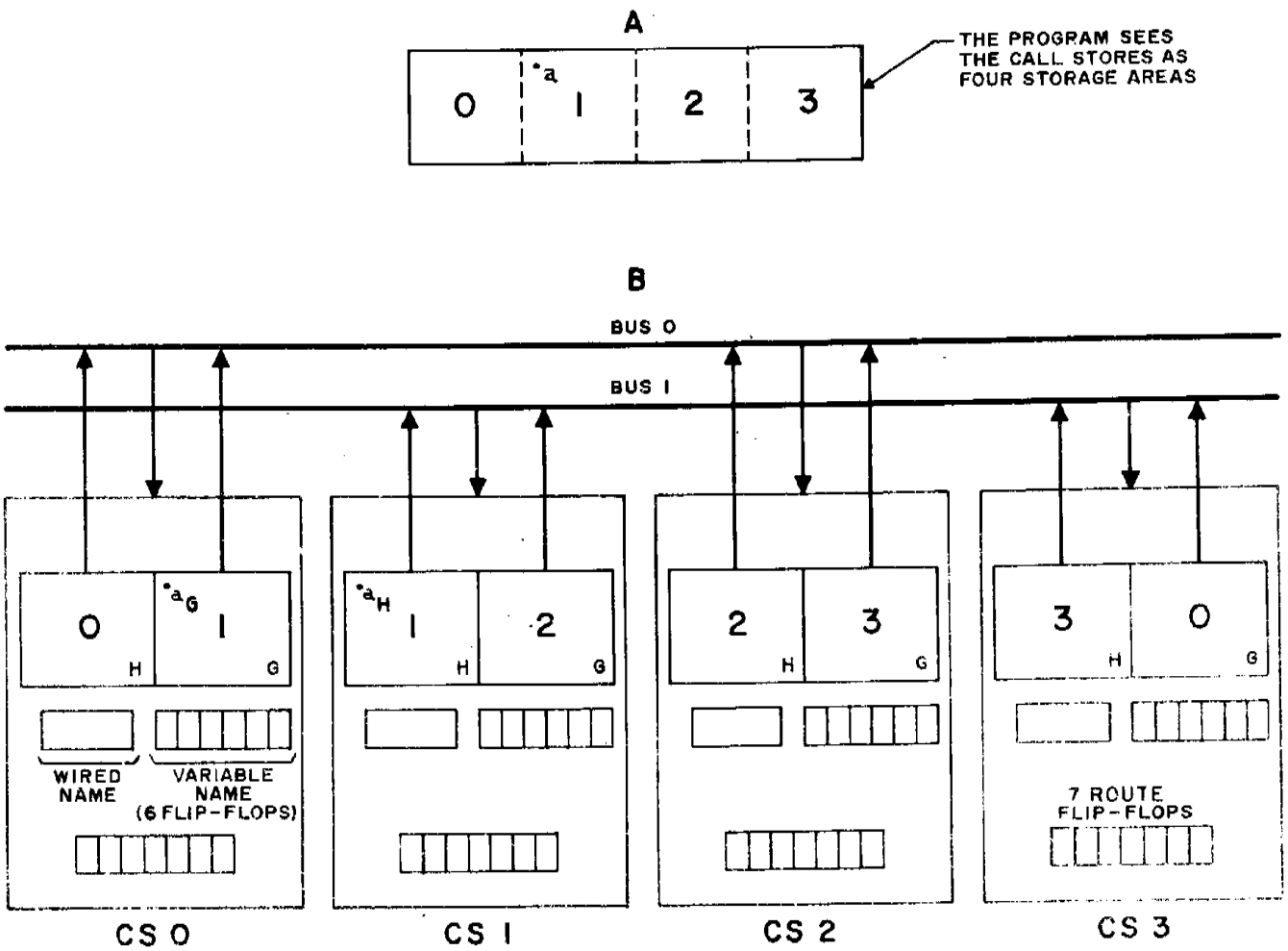

NOTE: THE H-HALF NAME OF EACH STORE IS WIRED AND FIXED.
THE G-HALF NAME IS SET ON 6 FLIP-FLOPS AND IS VARIABLE.

Figure 9-27 Call Store Name and Route Flip-Flops

Seven route flip-flops within each CS control the inputs and outputs to and from the buses. A flip-flop R0 allows the store to receive only from bus 0, if set; from bus 1, if reset. Two flip-flops HS0 and HS1 determine whether the normal readouts from the H half shall be sent on bus 0 and/or bus 1. These readouts can be sent on bus 0 if HS0 is set, on bus 1 if HS1 is set. Similarly, two flip-flops GS0 and GS1 determine whether the normal readouts from the G half shall be sent on bus 0 and/or bus 1. Two trouble flip-flops TBL0 and TBL1, when set, disable both input and output communications between the CS and buses 0 and 1, respectively.

TCI Library: www.telephonecollectors.info

D. INPUTS TO THE CALL STORE

Inputs to the call store consist of three sets coming from the Signal Distributor Applique, the Central Pulse Distributor, and the Central Control Circuits. Another input set consists of the +24 volt, -48 and ground for the store. The inputs from the Signal Distributor Applique Circuit have direct control of relays in the call store and the pulses from the CPD Circuit control certain flip-flops.

There are 53 Central Control Circuit inputs to the store comprised basically of five groups of information - six code bits, three mode bits, 12 address bits, three read-write-parity bits and 24 data bits. There are two buses, bus 0 and bus 1 where the 53 inputs are duplicated.

Five synchronization pulses are provided by Central Control Circuit for these groups of information: one for the code-mode, one each for the address and read-write-parity group, and two for the data bits.

There are four varieties of output leads. The first uses twisted pair to carry dc signals from flip-flops, relays and voltage regulators to the ferrods of the Master Scanner Circuit. The second is a single wire power alarm and the third are test points for battery supplies, internal circuit modes, and the store field test set.

The fourth variety consists of 26 answer leads for the Central Control Circuit duplicated on bus 0 and bus 1. Twenty-four are the call store readouts, one the all-seems-well signal, and the last a sync pulse.

E. MODES OF OPERATION

There are four basic modes of operation in a call store.

(a) Normal mode - In this mode, the call store serves as a memory for the system with ability to read and regenerate the contents of a selected word, or to erase the old contents and write in new information.

(b) Maintenance mode - This mode is almost identical to the normal mode. The normal mode has more flexibility based on K-code matches, while the maintenance mode has less selective options since the use of the K-code matches are limited. This mode is used when Central Control Circuit directs specified maintenance tests of certain locations in a particular store.

TCI Library: www.telephonecollectors.info

(c) Control write - The control write mode can alter the state of call store flip-flops. In addition, sections of the sequence control and memory circuits can be tested without fully addressing the modules.

(d) Control read - The states of key flip-flops and the absence or presence of store pulse points is noted and sent to Central Control Circuit.

F. CALL STORE ORGANIZATION FOR DUPLICATION AND TROUBLE SWITCHING

The number of call stores needed, depends upon the size of the system. A large electronic central office might require as many as 6,000,000 bits of call store memory. However, one-half million bits might be adequate for a small office. Signal Processor Circuits when provided in an electronic central office, may use up to eight call stores for each pair of Signal Processors. Because stored information is duplicated for reliability, these totals include call stores required for complete duplication.

In the actual organization of the central office equipment, the call stores are grouped with Central Control, Signal Processor, and Program Store Circuits in a number of control communities as shown in Figure 9-28. Normally, the Central Control and Signal Processor Circuits operate simultaneously and independently; consequently, the Central Control Circuits and each pair of Signal Processor Circuits must have separate call stores of their own. It must be possible, however, for Central Control Circuits to stop a pair of Signal Processor Circuits and use their call stores. The Central Control Circuits have access to the call stores of a signal processor community via the Signal Processor Circuits in that community.

The control community consists of two duplicate Central Control Circuits and their call stores. The plan of Figure 9-28 also provides for up to two signal processor communities, each consisting of two duplicate Signal Processor Circuits and their call stores.

Two duplicate buses (CC-CS bus 0 and CC-CS bus 1) link together the Central Control Circuits, their call stores, and the Signal Processor Circuits. Each signal processor community has two duplicate buses (SP-CS bus 0 and SP-CS bus 1) linking its Signal Processor Circuits and call stores. Each bus consists of 53 pairs to the call stores and 26 pairs from the call stores. Each call store can communicate on either or both duplicate buses, regardless of whether it is working with a Central Control or a Signal Processor circuit.

TCI Library: www.telephonecollectors.info

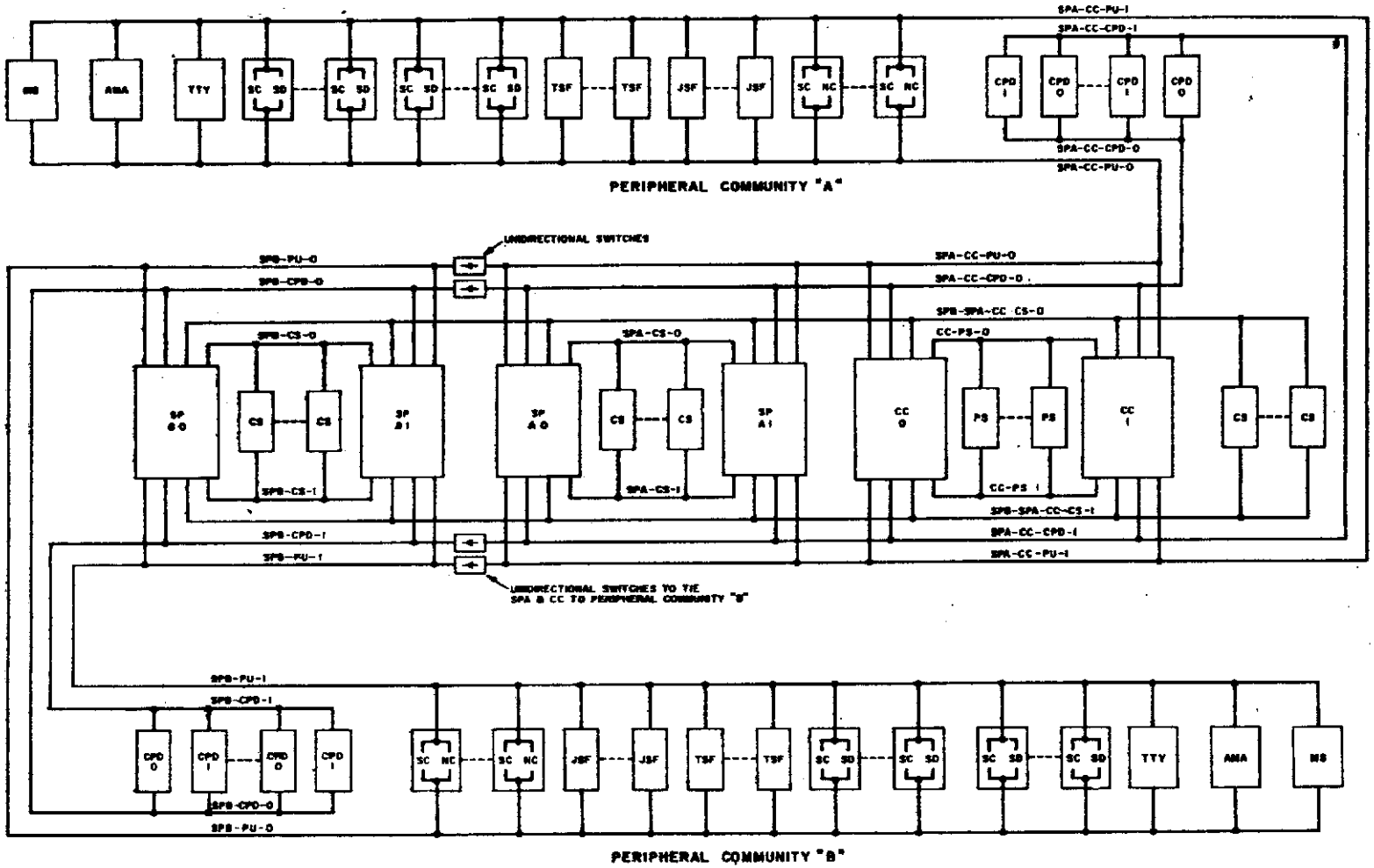

Figure 9-28 Office With Two Pairs of Signal Processors

TCI Library: www.telephonecollectors.info

9.5 CENTRAL CONTROL

1. General

Central Control (CC) is the primary data processing unit of the No. 1 Electronic Switching System. Its purpose is to execute a program or sequence of instructions obtained from a program store. Under direction of the program, the central control receives input information from lines and trunks via the scanners, performs logical and arithmetical operations, and causes basic actions to be carried out in all parts of the system in the process of completing telephone calls and diagnosing system troubles.

The logic circuits used in the central control are assembled on 4-by 7-inch printed circuit boards which plug into rack-mounted connectors. Four 7-foot bays house the equipment for central control. Various types of boards (commonly called packages) provide logic gates, flip-flop register elements, amplifiers, etc. The boards are interconnected to form specific logic functions by wiring together the terminals associated with the connectors. External communications between the CC and other system units are conducted over twisted pair cables which are connected to receiving or transmitting gates in the respective units.

2. General Method of Operation

The object of the central control is to carry out the stored program that has been provided for the system. The stored program is composed of sequences of instructions, each carrying out a data processing step (or steps) that contribute to the task to be performed. The order structure is defined to be the repertoire of instructions from which programs are constructed. Figure 9-29 shows the basic data processor of the No. 1 ESS. This consists of Central Control, Program Store, and Call Store. As will be seen later, the central control also deals with peripheral equipment, but the basic data processing operations are associated with the two stores.

TCI Library: www.telephonecollectors.info

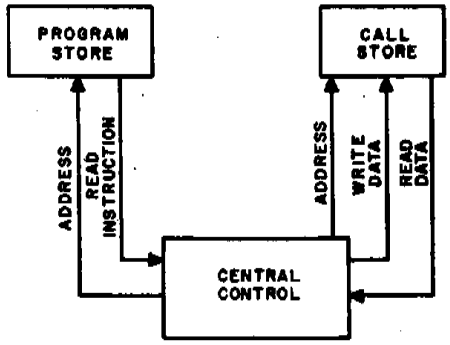

Figure 9-29 Block Diagram of Data Processor

The program store contains the programs for both call processing and system maintenance. In addition, each customer line has associated with it a number of translation constants. These constants are stored as translation words in the program store. In the face of system troubles, the program and translation words must be retained. Accordingly, the program store is a semipermanent memory which is not altered in the course of program execution. It may be addressed in order to read out instructions and data, but it may not be written into.

Temporary, or destructible, memory is provided in the call store. It contains call processing data that changes as calls are established and terminated in the system.

To provide optimum data processing capability, the central control can simultaneously address the program store to request an instruction, and the call store for a data operation.

We, therefore, have as the most basic elements of central control the items shown in Figure 9-30, namely a Program Store Address Generator, a Program Store Data Reception Center, (Buffer Order Word Register), a Call Store Address Generator, and a call store data reception and data transmission register (Buffer Register). The call

TCI Library: www.telephonecollectors.info

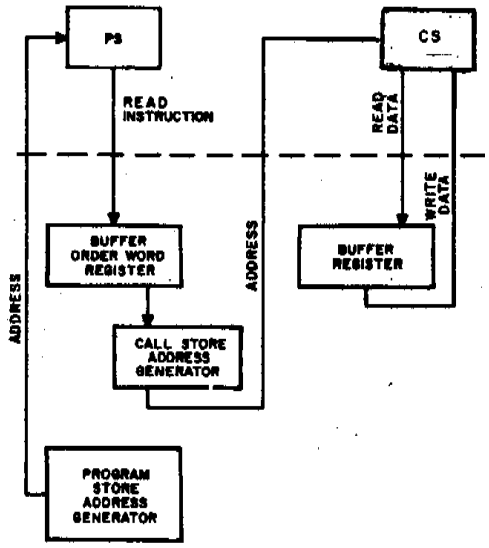

Figure 9-30 Basic Elements of Central Control - Part 1

store address generator will be described later. The buffer register serves both as a recipient of information from the call store and as a source of information to be transmitted to the call store.

A. INDEXING

As shown in Figure 9-31, the Buffer Order Word Register has associated with it, a buffer order word decoder so that gates may be controlled on the basis of the instructions read from the program store. Instructions are coded pieces of information used to specify for central control the operations that it must perform. Central control performs the operations by gating information from one place to another internally, and by sending signals out to the units which it controls, such as the call stores and peripheral units. In order to be able to manipulate information received from the call store, CC must contain a number of internal registers (indexing registers X, Y, Z). These indexing registers are nothing more than flip-flop groups that can store a binary word of information.

All index registers are 23 bits long. In terms of hardware, they become 24 bits long because there are two flip-flops on a single circuit package. In general, the extra flip-flop is not always usable for some disassociated function because a common gating input lead is used for

TCI Library: www.telephonecollectors.info

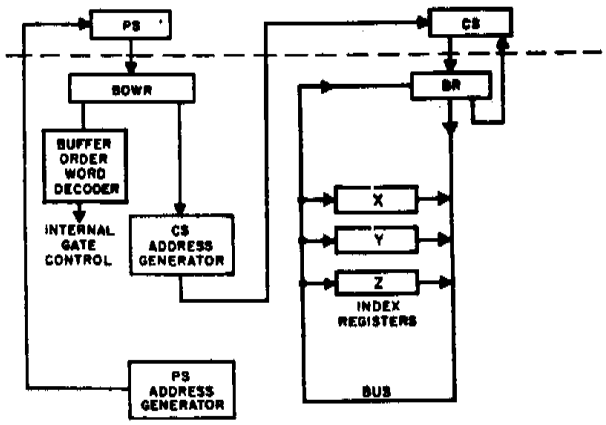

Figure 9-31 Basic Elements of Central Control - Part 2

inserting information into both flip-flops on a package. In order to gate information into these registers or flip-flop groups most efficiently, a common bus system is provided. This bus consists of 23 leads. The index registers gate information onto this bus, and the bus information may be gated back into the index registers. The buffer register is also an index register but has the additional function of handling communications with the call store.

In order to carry out this process known as indexing, the block diagram must show an index adder which has access from the buffer order word register and from the bus system common to the index registers. The index adder then accepts information from the two sources, adds the quantities, and deposits the sum in its internal output register. This is shown in Figure 9-32.

In the actual detailed block diagram of central control, the index adder consists of: an index addend register, which receives information primarily from the BOWR; an index augend register, which receives information primarily from the bus system; an index adder to process the data; and an index adder output register to receive the result and pulse out to the call stores. Note that the index adder system encompasses the function of the CS address generator of Figure 9-32.

TCI Library: www.telephonecollectors.info

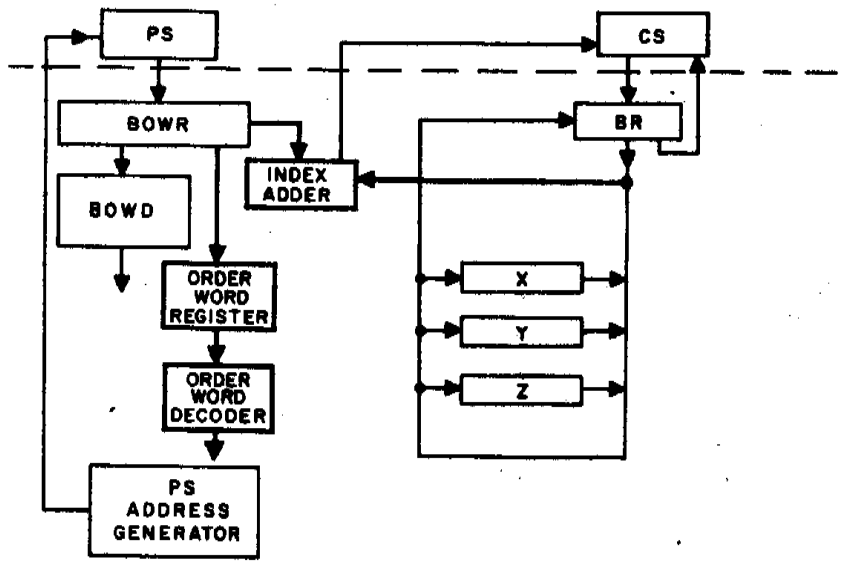

Figure 9-32 Basic Elements of Central Control - Part 3

B. BASIC ORDER WORD STRUCTURE

Figure 9-33A also shows the format for deriving the basic order structure of the binary words sent to central control from the program store. Each 44-bit instruction word consists of a 7-bit hamming and parity check word and a 37-bit instruction. Each instruction is divided into an operation portion and a constant or data-address portion. If the data-address field is to be used as a memory address, it is considered as a 21-bit word extending from bits 0 through 20. The buffer order word decoder then uses a 16-bit operation field (bits 21 through 36 of the instruction as it appears in the buffer order word register) to decode the instruction. If, however, the instruction uses the data-address word as data to be manipulated with the index register system, the data-address field is then extended to 23 bits and the instruction is determined by a 14-bit operation field (bits 23 through 36 of the buffer order word register).

BOWR		
7 CHECK BITS	14/16 BITS OPERATION FIELD	21/23 BITS DA FIELD

Figure 9-33A CC - Buffer Order Word Register

TCI Library: www.telephonecollectors.info

In the layout of Figure 9-33B the instruction requires that a memory word be moved to the X register. The operation field then contains the binary equivalent of the memory-to-X register instruction (MX in symbolic notation) and specifies register Y in the index register portion. The numeric 3 is shown in the data-address field in the block labeled constant. The conmplete instruction tells CC to read the memory and gate its contents first into the buffer register, which is the primary destination for all data from the call stores, and then gate the buffer register contents into the X register. The constant and index register sections are used in the following way. First, the address in memory that we wish to read must be identified. This is found by taking the contents of one of the index registers (in this case, index register Y is specified) and adding to it the contents of the constant section of the instruction, i.e., 3. We will, therefore, read the contents memory at address Y + 3. Y might be the starting address of a series of words that make up a table relating to an originating register. The constant 3 indicates that we are interested in the fourth word in the originating register. (The first word is 0.)

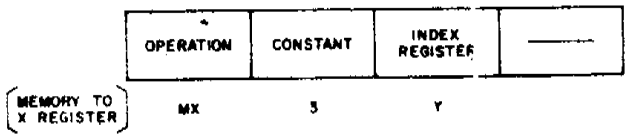

Figure 9-33B Basic Instruction Format

C. MASKING OPERATIONS

One of the most frequent operations encountered in central control is that of AND (or product) masking, which is the selecting of only a certain bit or bits of a data word prior to placing that word in a flip-flop register for further data processing. The remaining bits are masked out and are not transmitted to the register. Although most data words are 23 bits long, operational data itself is rarely of that length. For example, a single binary coded decimal digit requires only 4 bits. The memories are used most efficiently when groups of these subwords are packed together in one 23-bit memory word. When a particular subword is summoned by CC, the undesired bits must be masked out so that their presence can have no effect upon further manipulations of the desired subword. Masking will delete unwanted bits. The mask circuit added in Figure 9-34 is controlled by a 23-bit register (the logic register) which can blank any

TCI Library: www.telephonecollectors.info

combination of the bits of a word while not blanking the rest. The mask function is obtained by combining the contents of the logic register with the data word in AND gates, on a bit-by-bit basis. Wherever a bit in the logic register is 1, the corresponding bit of the data will pass through; wherever it is 0, the data bit will be set to 0. The following example illustrates how the middle 4 bits of a sample 8-bit word are retained while the others are AND masked by the control word.

10011010	Data
AND	
00111100	Mask Control
00011000	Masked Result

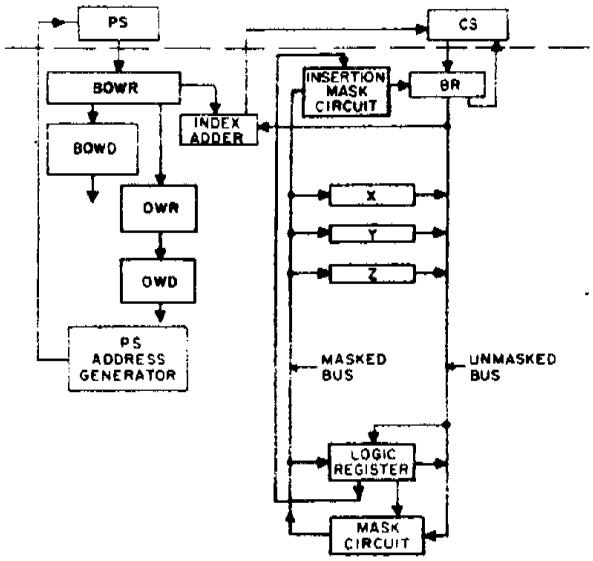

Figure 9-34 Basic Elements of Central Control - Part 4

The mask circuit has also the ability to form the logical OR and the EXCLUSIVE OR functions in addition to its normal AND masking ability. These functions are used when dealing with certain classes of instructions. For example, the orders UMX, UMY, and UMZ use the OR masking feature of the mask circuit to form the logical OR of a memory reading with the contents of the registers X, Y, or Z, respectively. The resultant word replaces the contents of registers X, Y or Z, respectively. These orders are carried out by

TCI Library: www.telephonecollectors.info

addressing the memory and moving the contents of X, Y, or Z via the unmasked bus into the logic register. The data obtained by the memory reading is then moved from the buffer register through the mask circuit, where the OR mask is applied, onto the masked bus, and into register X, Y or X.

The mask circuit is placed on the bus system which interconnects the input gating and output gating of the index registers. The mask circuit splits the input and output portions into two buses, the masked bus, and the unmasked bus. In this position, the masking operation is potentially applicable to all transfers of data words from one register to another, or to a transfer between a word in memory and a flip-flop register.

Conventional masking, as described above, is used for normal data operations. There are many instances, however, where it is required to insert subword information into a word that is contained in the buffer register and is to be returned to the call store. Suppose for example, as shown in Figure 9-35, that we wish to insert certain information into bits 0 through 3 of a word A, which has been read from the call store. Under these circumstances, we may wish to retain the information contained in the other bits of the word. An insertion mask circuit provides this ability. The logic register is again used as the source of the mask, but its control differs from the product masking just described. Those bit positions of the buffer register corresponding to bits of the logic register which contain zeroes are left unchanged; the remaining bits are replaced by the selected subword which is gated through the insertion mask circuit by the logic register bits which are ones.

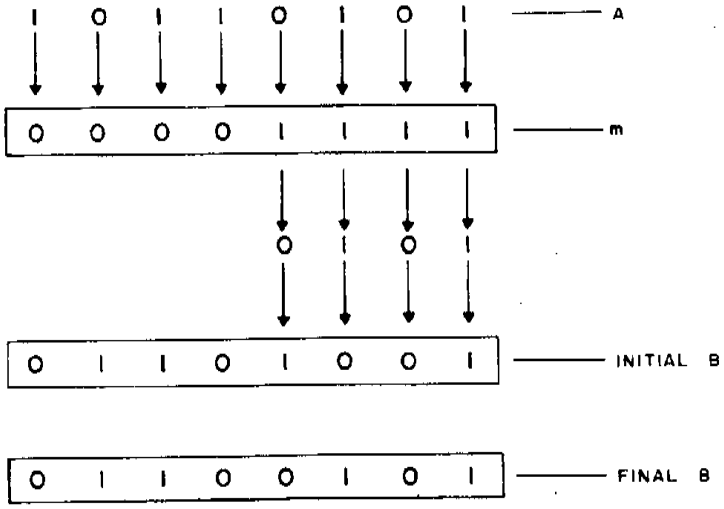

Figure 9-35 Insertion of A into B through Mask m

TCI Library: www.telephonecollectors.info

It should be noted that insertion masking can be applied only to data that is being moved through the mask circuit into the buffer register. In a single data processing step, either product masking or insertion masking may be applied, but never both. Figure 9-34 shows the inclusion of these circuits in the CC block diagram.

D. PROGRAM ADDRESS REGISTER (PAR)

Figure 9-36 shows more details of the program store address generator. In the previous paragraphs the obtaining of orders from the program store and their execution by central control has been explained for a sequence of orders which are located at consecutive addresses in the store. That is, an address is transmitted from the program store address generator in CC to obtain an order to be executed; that address is incremented by 1, and the new incremented address is then sent out to obtain the next order in the sequence. When the CC executes a transfer instruction, the original sequence is terminated and a new sequence of orders is acted upon. The transfer address is defined as the address of the first instruction of a sequence to which a

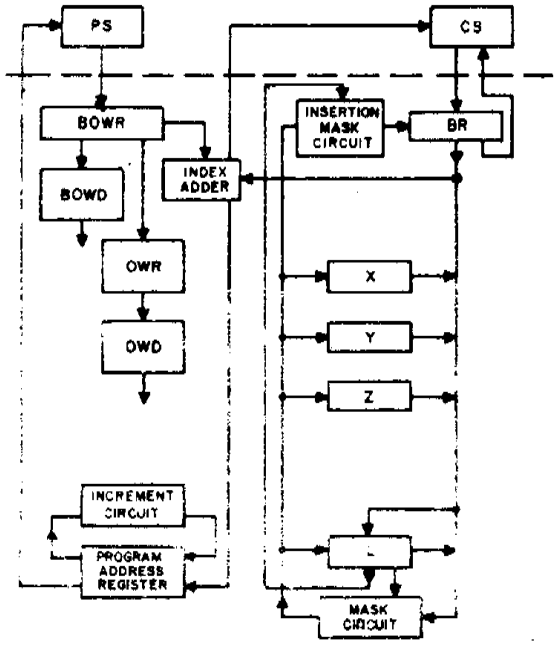

Figure 9-36 Basic Elements of Central Control - Part 5

TCI Library: www.telephonecollectors.info

transfer order passes control. The data-address field and/or the contents of a specified index register will provide the transfer address. In Figure 9-36 the PS address generator has been broken down into its two major components: (1) the program address register, which controls the address transmission to the program store; and (2) the increment circuit which updates the address in a stepped manner when proceeding through a normal program. In order to supply a transfer address to the program store, connection is made between the index adder and the program address register. By this path, a transfer address can replace the normally incremented program address as part of the execution of a transfer order.

E. ACCUMULATOR (K)

A K adder and K register (K = accumulator) have been introduced in Figure 9-37. These two blocks really imply a complete arithmetic system which performs the majority of data processing functions. As in the case of the index adder, the accumulator adder has associated with it an addend register and an augend register to contain the information to be processed. The accumulator register normally receives the results from the adder. The augend register can only be set to zero or to the value of the accumulator, while incoming words are inserted into the addend register via the masked bus. Thus, numbers can either be combined with zero or with the present contents of the accumulator.

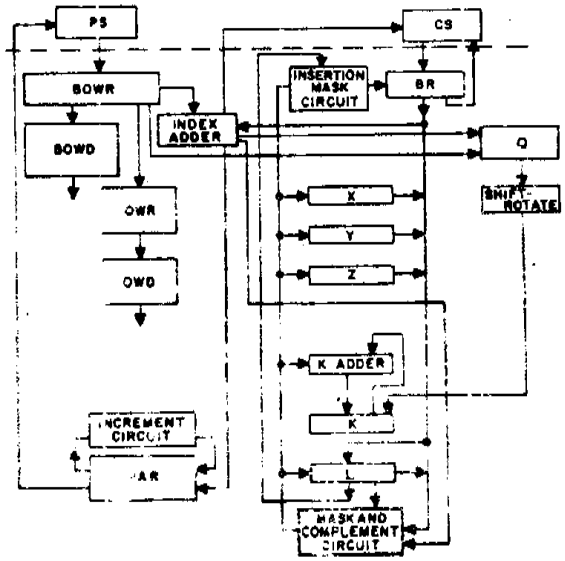

Figure 9-37 Basic Elements of Central Control - Part 6

TCI Library: www.telephonecollectors.info

Each word treated by the accumulator system is a 23-bit binary number (integer) with the least significant bit (or right-most bit) labeled bit 0, the next significant bit labeled bit 1, etc. The most significant (left-most) bit in the data word is designated bit 22. Positive numbers are identified by a 0 in bit 22, negative numbers by a 1. The remaining bits (bits 21 through 0) of a positive number indicate the magnitude of the binary integer. In the case of a negative number, the one's complement of the magnitude is denoted in bits 21 through 0. A negative integer is, therefore, represented with a one in bit 22 (the sign bit) and the complement of the magnitude (bit-by-bit inversion) of the integer appears in bits 21 through 0. For example, the decimal number +25 would be represented in binary form by:

00 000 000 000 000 000 011 001

The number -25 would be represented in the 1's complement form by:

11 111 111 111 111 111 100 110

The facilities for complementing are shown in Figure 9-37 as an appendage to the mask circuit. It is associated with the mask circuit since this is the most convenient place to affect data. Because the 1's complement binary arithmetic system has been selected, the bit-by-bit complement operation in the mask and complement circuit serves for both the logic complementing of data words and the arithmetic complementing of 23-bit numbers.

The accumulator adder has been provided with other properties so that it may perform the logical functions of AND, OR, and EXCLUSIVE OR. These are important when comparing quantities of data, or when examining them for particular characteristics. In special cases, it can perform these operations and activate decision-making circuits without disturbing the contents of the accumulator register.

Shift and Rotate Functions - Another function which has been incorporated into the accumulator is the ability of shifting or rotating information to the left or the right within the accumulator. Shifting is a frequent operation and is commonly applied when information in a word is not located in the bit positions most convenient for use. The example below shows how an 8-bit word A is affected by a shift to the right by three positions:

100 11 010	Initial word A
000 10 011	Word A shifted

TCI Library: www.telephonecollectors.info

The same 8-bit word rotated three positions to the right:

10011010	Initial word A
01010011	Word A rotated

Note that the operation is similar to a shift, however, the only difference is that no bits are lost. As shown in Figure 9-37, inputs to the rotate shift circuit are from the Q register.

F. FIRST ONE REGISTER (F)

Another function associated with the accumulator is that of being able to inspect the accumulator contents and detect the position of the rightmost 1. A detect first one circuit is attached to the accumulator which examines all bits and forms a 5-bit quantity representing the position of the rightmost 1. This 5-bit quantity may be placed in the F register as part of the execution of two special transfer orders, TKZRFU and TKZRFZ. These orders include the decision to transfer to a new sequence of instructions if the contents of the accumulator register is +0 (all 0's, including the sign bit). Otherwise the binary value of the rightmost 1 is placed in the F register. The rightmost 1 detection function is very useful in dial pulse scanning to find which of a number of dial pulse receivers recorded activity during this particular scan; or in supervisory scanning, to determine which trunk had reported a seizure or disconnect. An example is shown in Figure 9-38.

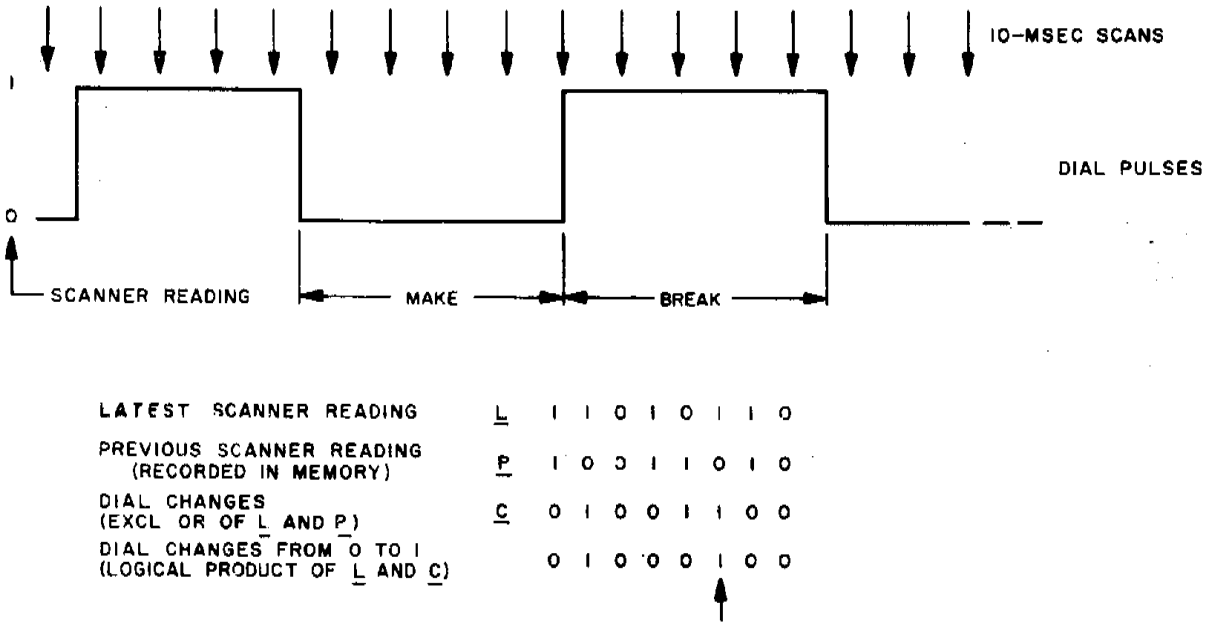

Figure 9-38 Use of Logical Operation of Count Dial Pulses

TCI Library: www.telephonecollectors.info

G. MEMORY ADDRESS DECODER (MAD)

Figure 9-39 indicates one of the more complicated aspects of central control operations, the process of reading data from the program store. As was indicated earlier, the program store is primarily a source of instructions, the call store primarily a source of data. However, translation information in the form of data is made available in the program store and facilities must be provided in the system so that this information is recognized as data and not as an instruction. Most of the memory reading instructions can be used to obtain data from the call store or the program store. This is accomplished by providing different addresses for call store and program store locations. The range provided by the 21-bit data-address field of memory reading instructions is sufficient to specify any call store or program store location within the physical limitations of No. 1 ESS store capacity. A memory address decoder circuit is used to examine the output of the index adder whenever a memory operation is called for. Whenever a memory instruction is being executed and a call store address is formed in the index adder, the memory address decoder will send the output of the index adder directly to the call store and readings will proceed in the normal fashion. If the memory address decoder recognizes an address associated with data in the program store, it must initiate a sequence operation which will be controlled by a sequence circuit. This step is required because the central control cannot simultaneously obtain from the program store both an instruction and the data that it is to manipulate.

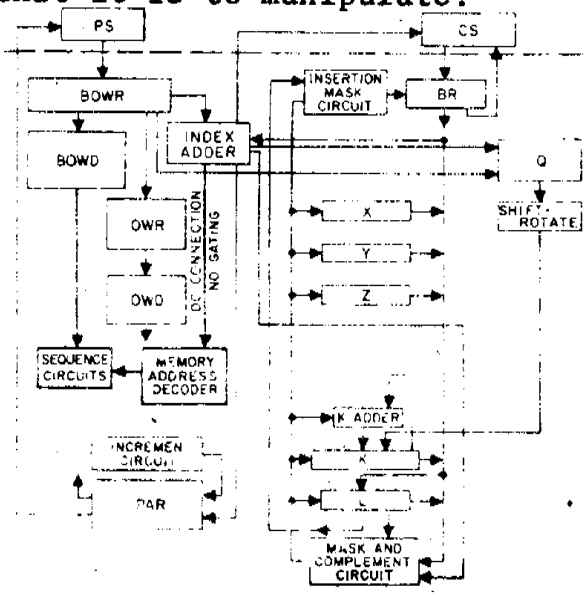

Figure 9-39 Basic Elements of Central Control - Part 7

TCI Library: www.telephonecollectors.info

H. CENTRAL CONTROL TIMING

The central control is a synchronous data processor using a multiphase clock. The basic cycle time is 5.5 microseconds. Each 5.5 usec cycle is subdivided into 22 intervals numbered from 0 to 21 as shown in Figure 9-40. Identification of a particular clock pulse is given by naming the interval which contains the clock pulse leading edge, followed by the letter T, followed by the interval number of the clock pulse trailing edge. For example, a pulse which commences at time 3 and continues until time 5 is identified as 3T5. In this manner, the 22 intervals, each of 0.5 usec duration, are numbered 0T2, 1T3, 2T4, through to 19T21 and 20T22. Note that T22 of one cycle corresponds to T0 of the next. There are three principal phases of the clock which are used to control the transmission of data over the internal bus system. These are 0T8, 10T16 and 16T22. Associated with each of the three principal clock phases are shorter phases (or associated sampling pulses) 0T6, 10T14 and 16T20. As indicated in Figure 9-40, the longer phases are used to gate information from a register onto a bus. The associated sampling pulses are used to sample the contents of a bus for gating into a flip-flop register. The half-microsecond guard interval ensures that the bus being sampled is not changing at the end of the sampling pulse. The half-microsecond pulses, in general, provide the timing required for all other internal functions, and are used to control the communication links between the central control and associated system equipment.

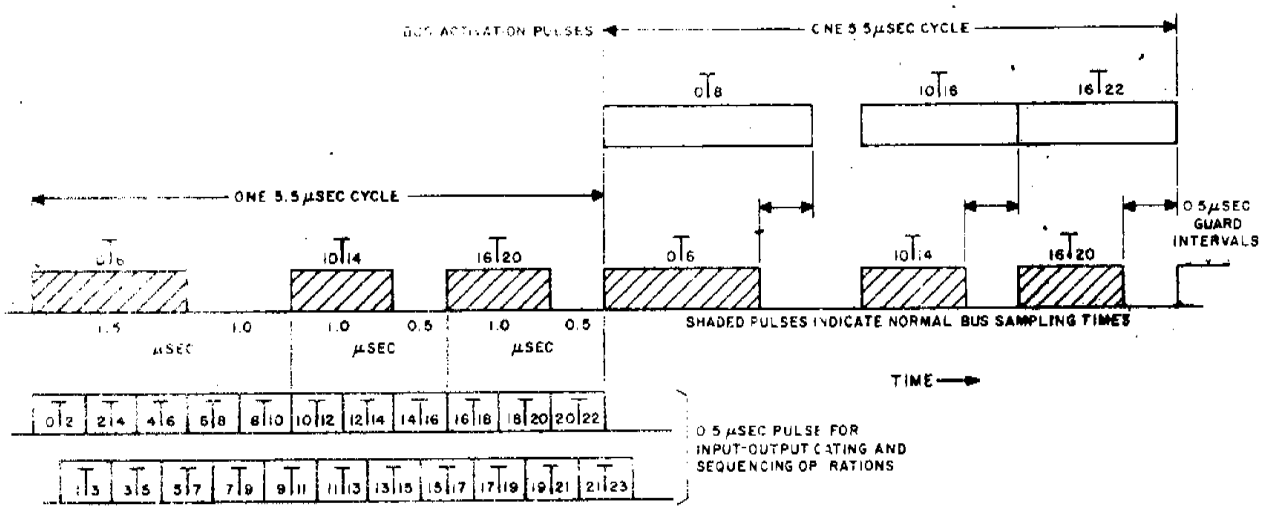

Figure 9-40 Central Control Timing Pulses

TCI Library: www.telephonecollectors.info

Table 9-1 shows what happens in consecutive time slots. Let us assume that the instruction at address AA is the instruction "memory to the X register at the address BB plus Y." Assume that BB plus Y is a program store address. At time 1, the order word register (OWR) has the previous instruction, the buffer order word register (BOWR) has the instruction in question, and the program store address register (PAR) has the address of the next instruction and, in fact, has already sent this address to the program store.

TABLE 9-1

TIME SEQUENCE OF WORDS PASSING THROUGH BOWR, OWR AND PAR WHEN READING DATA FROM PROGRAM STORE

TIME SLOT	BOWR	OWR	PAR
1	(AA)	(AA-1)	AA+1
2*		(AA)	BB+(Y)
3*	(BB+(Y))	(AA)	AA+1
4	(AA+1)	(AA)	AA+2
5	(AA+2)	(AA+1)	AA+3

(-) Symbol meaning word stored at this address or in this register.
Instruction at address AA is MX,BB,Y,-; BB+(Y) is an address of data in the program store.

*These actions are controlled by central control internal sequence circuits since the operation covers more than one central control cycle time.

At time 2, this reading, which is the instruction stored at address AA plus 1, has been received and the instruction AA has been gated to the order word register. In the meantime, the program store data word has been recognized, and address BB plus Y has been gated into the program store address register. A sequence circuit causes the rejection of instruction AA plus 1 from the buffer order word register since it must be prepared to receive the data which is stored at BB plus Y. At time 3, the buffer order word register receives this data, the order word register still retains the instruction in question, and the program store address register is now set to address AA plus 1. This address, AA plus 1, was saved in the increment circuit associated with the program store. The information from the buffer order word register is now passed via the index adder and the mask and complement, the masked bus, and the insertion mask to

TCI Library: www.telephonecollectors.info

the buffer register. The buffer register, in turn, passes the information via the bus to the X register under the control of the order word decoder, just as if the instruction had been a conventional call store data reading. At time 4, the instruction is actually executed, that is, the information is gated to the X register. The new instruction is now in the buffer order word register, the program store address register has already advanced to the next instruction, and at time slot 5, the normal fetching and executing of the sequence of orders continues. It may be noticed that the time required to read data from the program store is three cycles as opposed to the conventional single-cycle operation required for reading data from the call store. The three cycles arise because one cycle is necessary for the basic instruction, one extra cycle is necessary because the reading of the next instruction from the program store arrived before it could be used, and the third cycle is necessary to read the data from the program store.

I. OVERLAP OPERATION

There is a degree of overlap operation within the CC. This means that two orders are normally processed simultaneously with due care taken that the demands of the two never conflict. Normally, central control requests an instruction from the program store every 5.5 usec. Actually, in most 5.5 usec cycles, CC is at the same time:

(a) Completing the execution of the instruction at some address, say 200

(b) Carrying out the preliminary operations of checking, indexing, and index register modification for the instruction at address 201, and

(c) Sending the address 202 to the program store as shown in Figure 9-41.

To make possible this overlap type of operation, when indexing is completed, the 16 bits of the operation field are sent to the order word register (OWR). Note that the check bits are no longer needed and that the DA field, possibly modified, is available at the IAOR. Thus, the BOWR can be made available to receive the next instruction. While the execution of one instruction is completed under the control of the OWR, the indexing for the next instruction is carried out under the control of the BOWR.

TCI Library: www.telephonecollectors.info

Decoders are associated with the BOWR and the OWR. The BOWR controls whatever gates are necessary to carry out the indexing operation for the instruction currently in the BOWR. The OWR controls the gates that are necessary to complete the execution of the instruction in the OWR.

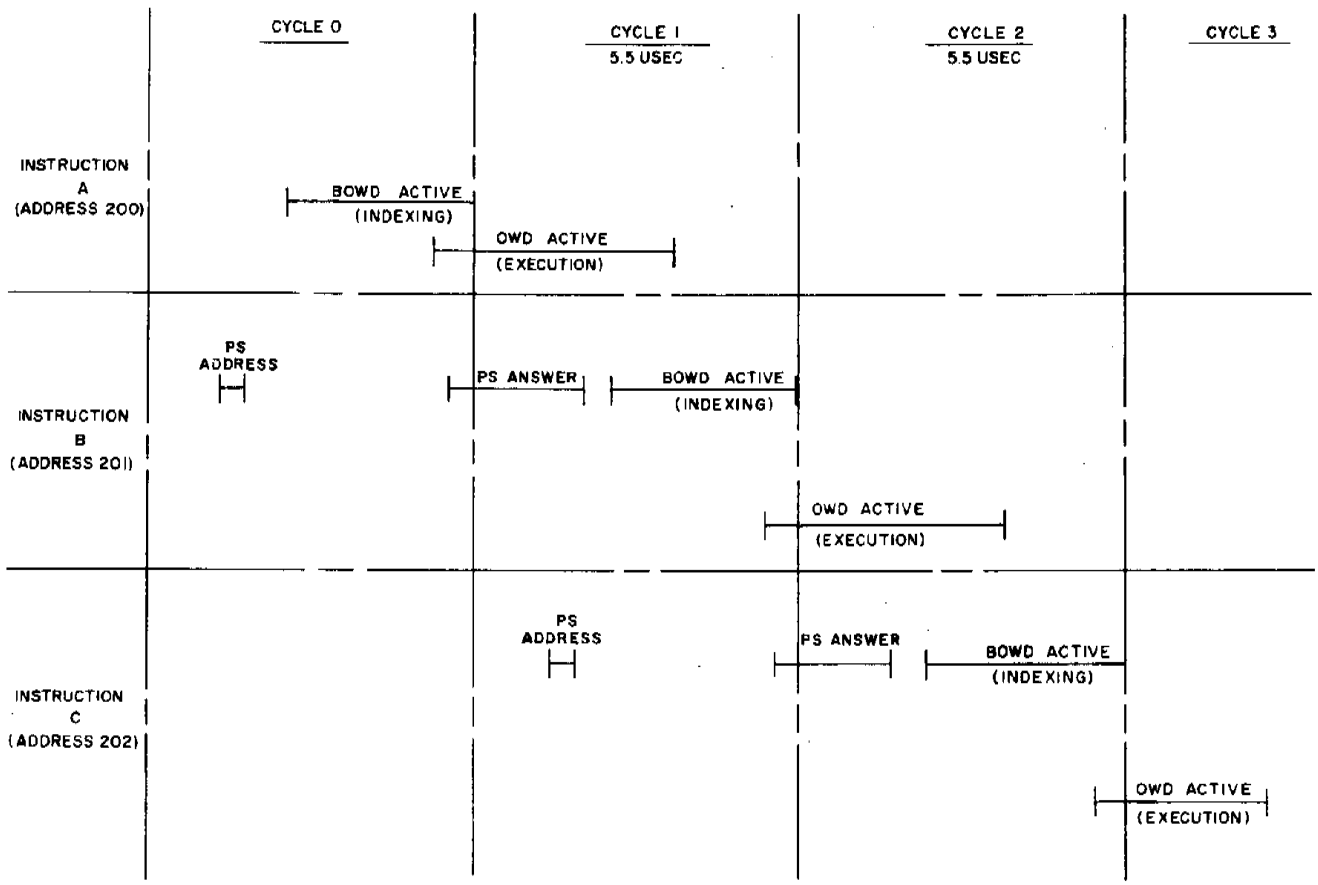

Figure 9-41 Overlap Operation

J. SEQUENCING CIRCUITS

Sequencing circuits are needed whenever the information in the order word and buffer order word registers is insufficient, on a combinational circuit basis, to specify

TCI Library: www.telephonecollectors.info

all actions within the system. They supplement the functions performed by the OWD and BOWD in cases that require the extension of cycle time to complete an instruction. Sequencing circuits are needed for the following operations.

(a) If the information from the program store is incorrect as determined by an error-detecting circuit, in one or more bits, an error correction circuit is available in the central control to remedy the situation. Before the information in the buffer order word register can be used, the error must be corrected. If a single bit in the BOWR is in error, the error correction sequencing circuit causes one cycle to be skipped and corrects the information in the buffer order word register during this cycle, or requests a retransmission if the error is incorrectable. Whenever an indication occurs in central control that a program store reading was in error and cannot be corrected, a reread is automatically initiated by the error correction circuit. A reread is required when a double error is detected, when an address error is detected, or when no All-Seems-Well pulse was returned from the program store with the original reading.

(b) A special sequencing circuit is required to read data words from the program store. The read-write sequencer is used for this purpose. It is also used to write control words into the program store.

(c) In the same way that data can be read from the program store, instructions can be read from the call store. However, each instruction requires two call store readings since one 23-bit call store word does not contain sufficient information to define the operation and data-address fields. A sequencing circuit is provided to control the reading of two consecutive call store addresses based on the address stored in the program address register, and to store the contents of these readings in the buffer order word register. (They must not go into the buffer register since this register is used only for data manipulation.)

(d) If a parity failure occurs on call store readings, or if an All-Seems-Well does not arrive from the call store, then the call store must be reread. The same is true for writing operations when the call store senses that a faulty transmission has occurred. Under the control of sequencing circuits the information must be reread or rewritten.

TCI Library: www.telephonecollectors.info

(e) The central control includes a multilevel interrupt system. Certain timing signals or hardware check failure signals that are generated either internally or externally to central control will activate the interrupt system. Activation of this system causes whatever sequence of orders is presently being executed to be interrupted and control is transferred to a predetermined interrupt program sequence. An interrupt sequence circuit effects this transfer and stores the contents of certain central control registers in the call store. The stored information indicates, among other things, where a transfer must be made to return program control to the interrupted sequence. In most instances, such a return to the point of interruption is made after the function initiated by the interrupt signal has been performed. The various interrupt signals are assigned to one-of-ten priority levels: A, B, C, D, E, F, G, H, J or K, where A represents the highest priority level and K is the lowest. The interrupt system provides simultaneous and sequential lockout of interrupt signals, so that only higher priority interrupts can break into interrupt or program sequences caused by a lower-level interrupt. When no interrupt signal is being honored by the interrupt system, the central control is said to be operating in the base level, or level L.

(f) The go-back-to-normal sequencing circuit performs the inverse function of the interrupt sequence circuit. Following an interruption, the work that had been interrupted must be resumed. The sequencing circuit restores the original contents of the program address register and the buffer register so that the interrupted program may be resumed as if no interrupt had occurred.

(g) A special sequencing circuit is required to read signal processor call stores. Signal processor call store readings require a 2-cycle operation. The signal processor call store sequencing circuit, therefore, introduces an extra cycle of delay so that the information from the signal processor call store may return to central control in time for processing.

TCI Library: www.telephonecollectors.info

(h) The peripheral sequencing circuit is a special sequencing circuit associated with communications between central control and the central pulse distributor and peripheral equipment.

(i) In No. 1 ESS there are two central controls, one serving in standby status as a potential replacement in case the other central control experiences a hardware trouble; the other unit is designated as the active CC and actually is in control of the switchgear of the No. 1 ESS. The active control can perform tests on the standby. Certain of these tests (off-line operation) require the aciive CC to stop the standby's execution of instructions, place new data in the standby, and restart it for further tests. A start-stop sequence circuit is provided which, in the standby unit, responds to stop signals transmitted from the active unit. The enabling of the start-stop sequencer causes it to inhibit the decoders and remaining sequence circuits. Similarly at the end of the sequence, start signals from the active CC reactivate the standby's decoders and sequencers. These inhibit signals stop the obtaining and executing of program orders.

(j) The transfer sequencing circuit carries out the steps for direct and indirect transfers. It not only steers the transfer address to the PAR and blocks the decoders during the cycles required to effect the transfer, but it also handles index modification and return address options associated with transfer orders.

(k) When the No. 1 ESS includes a Signal Processor Circuit, the signal processor normally has control over the central pulse distributor and peripheral equipment. A signal processor lockout sequencer provides for an automatic and essential delay of one cycle of central control operations for certain orders and conditions. Program execution in the central control and the signal processor are not in step with one another. In certain CC program sequences, momentary access to the central pulse distributor and/or peripheral equipment may be required with the execution of peripheral orders. The central control responds to such orders by transmitting stop pulses to the signal processor to ensure that it does not also attempt

TCI Library: www.telephonecollectors.info

to address the same peripheral unit. The signal processor lockout sequencer responds to the first of a chain of peripheral orders by allowing the first signal processor stop pulse to be transmitted while delaying the execution of the CC's peripheral order for one machine cycle. This delay ensures that the signal processor has completed any communication with the CPD or peripheral equipment in question that may have been in progress at the time that the CC received the peripheral order. Once central control seizes control, the second and following of a chain of peripheral orders are executed without additional delay cycles. It should be noted that a peripheral order requires two central control cycles for completion (the peripheral sequencer provides the gating for the second cycle). Accordingly, a chain of peripheral orders is a set that is executed every second cycle. In most instances, the orders appear in the following sequence:

Address	Instruction
AA	Peripheral Order
AA+1	Nonperipheral Order
AA+2	Peripheral Order
AA+3	Nonperipheral Order
AA+4	Peripheral Order
.	.
.	.
.	.

K. COMPARE AND TRANSFER OPERATIONS

Compare instructions and transfer facilities are illustrated in Figure 9-42. Compare instructions are instructions which compare internal data or a memory word with the contents of some register and gate the results onto the bus to which are attached sampling gates and flip-flops. These flip-flops, called the C flip-flops, can store the overall comparison status of the data on the bus without storing the full 23-bit bus information. One C flip-flop stores the sign bit, i.e., bit 22, the most significant bit on the bus. The other C flip-flop indicates whether the bus contained all 1's or all 0's (homogeneity) or a nonhomogeneous quantity. Therefore, this C flip-flop indicates

TCI Library: www.telephonecollectors.info

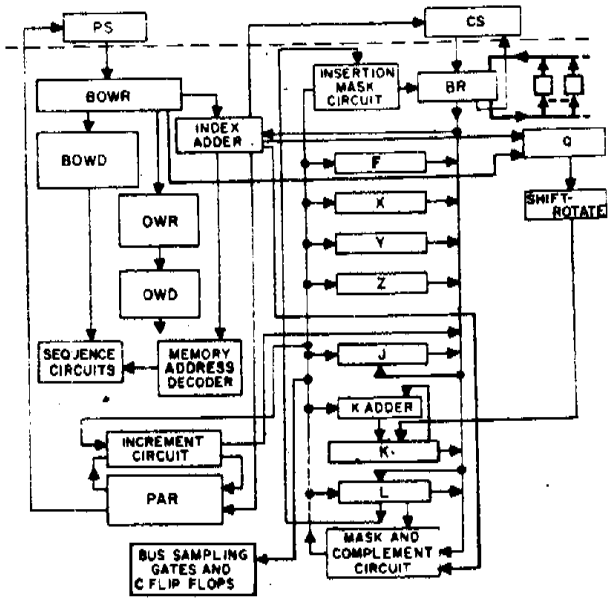

Figure 9-42 Basic Elements of Central Control - Part 8

whether or not the bus was arithmetic 0. When examined, the two C flip-flops, in combination, will tell central control whether one-of-eight particular transfer conditions has been met. The eight states used in transfer orders and their mnemonic representations are:

P	Plus	Sign = 0
M	Minus	Sign = 1
AZ	Arithmetic zero	Homogeneity = 1
AU	Arithmetic unzero	Homogeneity = 0
LZ	Logical zero	Sign = 0 and homogeneity = 1
LU	Logical unzero	Sign = 1 or homogeneity = 0
GE	Greater than or equal to	Sign = 0 or homogeneity = 1
LE	Less than or equal to	Sign = 1 or homogeneity = 1

A comparison between the contents of an index register and a constant (specified in the data-address field of a Compare instruction) can be determined using the index adder. The contents of the index register is moved via the unmasked

TCI Library: www.telephonecollectors.info

bus, the mask and complement circuit (when complementing is performed), and the masked bus into the index adder. The index adder subtracts the numbers by adding the constant to the complement of the contents of the index register. The result is gated to the masked bus and to the C flip-flops. The results of the comparison may be determined by orders which examine the state of the C flip-flops.

Similarly, an internally generated data word, W, or a data word, M, obtained from memory, can be compared with the contents of the accumulator register in the accumulator adder, and the difference gated directly from the adder to the C flip-flops.

Conditional transfer orders (transfer orders are prefixed by the letter T in their mnemonic representation) include orders which examine the C flip-flops. If the state of the C flip-flops match the transfer condition specified by the conditional transfer order, a transfer of program control will be effected; otherwise, the execution of the next order in sequence will proceed. In addition, conditional transfer orders are provided which examine the state of the accumulator register directly. There are also conditional transfer orders which transmit the contents of a specified index register to the C flip-flops. The state of the C flip-flops and the conditions of the transfer order then determine whether a transfer is to be made or the sequence of orders is to continue.

In addition to the conditional transfer orders, the order structure includes unconditional transfer orders. When these latter orders are executed in central control, the transfer is always made; that is, the transfer of program control is not conditional on the state of some flip-flop or register in central control. Most conditional and unconditional transfer orders are provided with an indirect addressing option. If the option is not specified, the transfer order is said to be provided with direct addressing or the order is a direct transfer order. In either case, an address is generated in the index adder which consists of the contents of the data-address field of the transfer order, the contents of a specified index register, or the sum of the two. In the case of direct transfers, the resulting address is the transfer address and is gated from the index adder directly to the PAR to effect the transfer. When the indirect address option is specified, the address is considered to be a memory reading address. The data obtained from the corresponding memory location is gated to the PAR as the transfer address.

TCI Library: www.telephonecollectors.info

L. "J" OPTION

Transfer orders are used to shift the execution of program sequences (program control) from one sequence to a second sequence. In many instances, upon completion of the execution of the second sequence, program control is to be returned to the first sequence. To provide a link for the return, the central control attaches special significance to index register J as a "jump" or return address register (see Figure 9-42). A J option may be specified with the transfer orders. When the option is specified, the execution of the transfer to the second sequence is accompanied by the transmittal of the contents of the add one logic circuit (the unincremented contents of that circuit) onto the unmasked bus and from there into the J register. The J register thus contains the address of the point of departure from the first sequence to the second. Its contents may be used by transfer orders in the second sequence to return program control to the first sequence. This ability permits many first sequences to share a common function in a second sequence, thus conserving the number of program orders required to carry out the overall call processing and automatic maintenance functions of the No. 1 ESS.

M. MISCELLANEOUS FLIP-FLOPS

There are a number of miscellaneous flip-flop groups in central control such as the match registers, the match and mode control registers, the CPD echo register, and the bus control flip-flops (this last group selects which of duplicate buses the central control is currently using in communicating with program store, call stores, CPD's, etc.). The contents of these registers may be interrogated and altered by memory reading and writing orders just as if the registers were memory locations in a call store. The memory address decoders respond to addresses assigned to these registers to: (a) transmit information from a specified one of the miscellaneous registers to the buffer register for memory reading orders or (b) transmit information from the buffer register to a specified one of the miscellaneous registers for memory writing orders. The register groups are indicated in the upper right portion of Figure 9-42.

N. COMMUNICATION WITH PERIPHERAL EQUIPMENT

The instructions for addressing peripheral equipment can be summarized as follows. First, there are instructions for addressing only the central pulse distributor. Such instructions are used to set and reset unit status and bus

TCI Library: www.telephonecollectors.info

routing flip-flops in the various units (central control, program stores, etc.) at electronic speeds. In addition, there are general purpose peripheral orders which cause the contents of the F register (set to the proper value by a previously executed order) to be transmitted through the translators and onto the CPD address and CPD execute buses. The same orders also load the addend K register and gate a translated form of this information onto the peripheral unit address bus. Note, as indicated in Figure 9-43, that one-of-seven peripheral unit translators may be selected, based on the contents of the F register. Included in the general purpose peripheral orders are scanning orders which cause the logic register to be reset and its inputs to be connected to the peripheral unit reply bus to obtain the scanner response. There are also special purpose peripheral orders which carry out the peripheral actions described above and also other data processing actions. For example, execution of the order JKMSF causes the contents of register J to be transmitted to the accumulator register and to the C flip-flops. This action is followed by the gating of a memory reading from the buffer register to the addend K register. Finally, the peripheral sequencer is enabled to carry out the CPD and peripheral actions for one scanning operation.

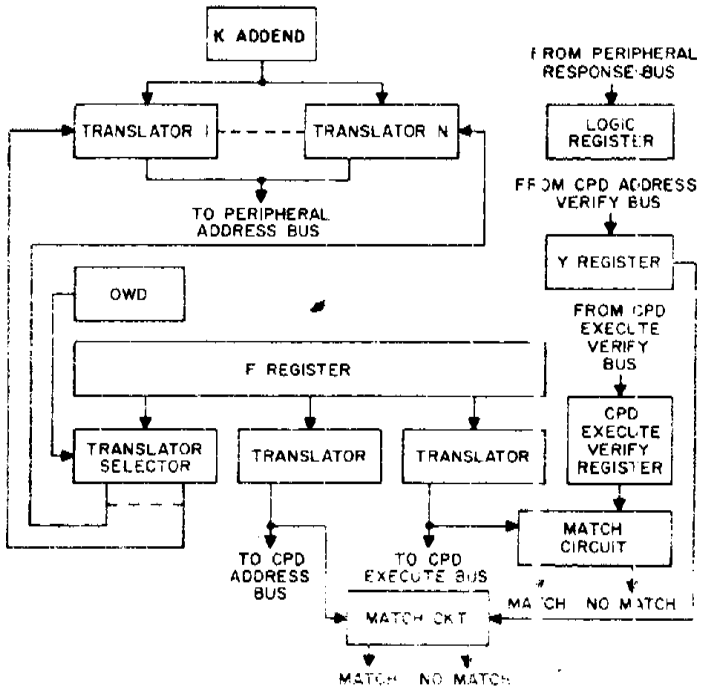

Figure 9-43 Central Control Communication With Peripheral Equipment

TCI Library: www.telephonecollectors.info

O. PERFORMANCE AND RELIABILITY

In order to meet reliability specifications, the central control is fully duplicated. The two CC's are referred to as either the active or the standby unit. The active unit performs the actual system functions, while the standby continuously checks the operation of the active. As trouble develops, the status of the units can be switched and diagnostic routines instituted to assist in pinpointing the difficulty.

Within each central control are two internal match buses which provide access to selected information processing points; these are labeled internal match bus 0 and internal match bus 1. Under control of the match control decoder, information from selected points is transmitted to these internal match buses and from there, other gates are enabled to place this information into internal match registers and from there transmit the sampled information to the other central control unit. The match control decoders in both central controls are normally operated in step so that the information transmitted from the first central control to the second is stored in external match registers. Two match circuits serve to compare the contents of these registers. According to the state of the mode control register and the presence or absence of the match condition, the match control decoder generates the corresponding output signals. For example, when the matching circuits are employed in the routine matching mode, a selected sequence of common match points in each central control is matched at the rate of 2 matches per cycle; the detection of a mismatch condition generates a maintenance interrupt signal and further matching is automatically halted.

If the interrupt program cannot be correctly executed, the emergency action circuit quickly times out again and restarts the interrupt program with a new trial configuration of central controls, program stores, and interconnecting buses. Once the trouble is eliminated from the active portion of the No. 1 ESS, the emergency action circuit is retired and other maintenance programs continue to isolate the trouble.

In the event that the central control cannot cure its own difficulties, the difficulty is displayed via trouble indicator circuits in central control that are wired to audible and visual alarms in the Master Control Center. This center includes indicator lamps which show which CC is the active unit; whether or not a central control is in

TCI Library: www.telephonecollectors.info

trouble; whether or not the emergency action circuit is involved in a maintenance action, etc. The maintenance man, upon analyzing this display, may operate keys or pick selected buttons on the master control center display panel to force a configuration of the central processor to regain a working system. Such actions constitute the last line of defense against system troubles and generally are not to be called upon until all the previously described maintenance hardware and programs fail to clear the trouble.

The data processing capability of the central control is limited in large, busy ESS offices because of the time absorbed in communicating with the peripheral units for the purpose of line and trunk scanning for call originations, disconnects, dial pulse register updating, etc. The Signal Processor has been developed to relieve the CC of these routine tasks. With its own battery of call stores, the SP effectively assumes all the CC's responsibility to the input/output system (without, however, divorcing the CC from that system). The central control is then freed to concentrate on its specialized job of processing the already assembled data.

In very large offices, the central control can accommodate additional peripheral units by serving two separate signal processor communities.

The communication link between central control and signal processor is the same as that with a call store, i.e., the SP occupies a position on the CC-CS bus and is identified by a similar address code.

Recently the No. 1 ESS has been adapted for data communications. Although the demands of a data system differ significantly from a telephone system, the central control is affected mainly from a program standpoint rather than hardware modification. In the same way as the signal processor was used to isolate the CC from the input/output facilities, the Buffer Control is used as an intermediate device to monitor the raw input/output data and assemble it in a form compatible with the speed and format required by the CC.

In a data office, the buffer control inherits the signal processor's position and identifying address on the call store bus.

TCI Library: www.telephonecollectors.info

The signal processor also meets the same reliability and performance standards found in central control. The signal processor is fully duplicated. The two SPs are referred to as either the active or the standby unit. The active unit performs the actual control of the peripheral equipment, while the standby continually monitors the performance of the active. When an occasional trouble develops, the status of the units can be switched by CC, which would then institute maintenance procedures. As part of the remedial action, the CC can divorce the SPs from parallel operation. Call processing is momentarily suspended while CC attempts to recognize the faulty situation. If it establishes that the active SP of the pair is troublefree, CC enlists its aid in diagnosing the faulty unit, meanwhile reestablishing call processing with the good unit. If the active SP is suspected of trouble, the units are switched to place the previous standby unit into control.

TCI Library: www.telephonecollectors.info

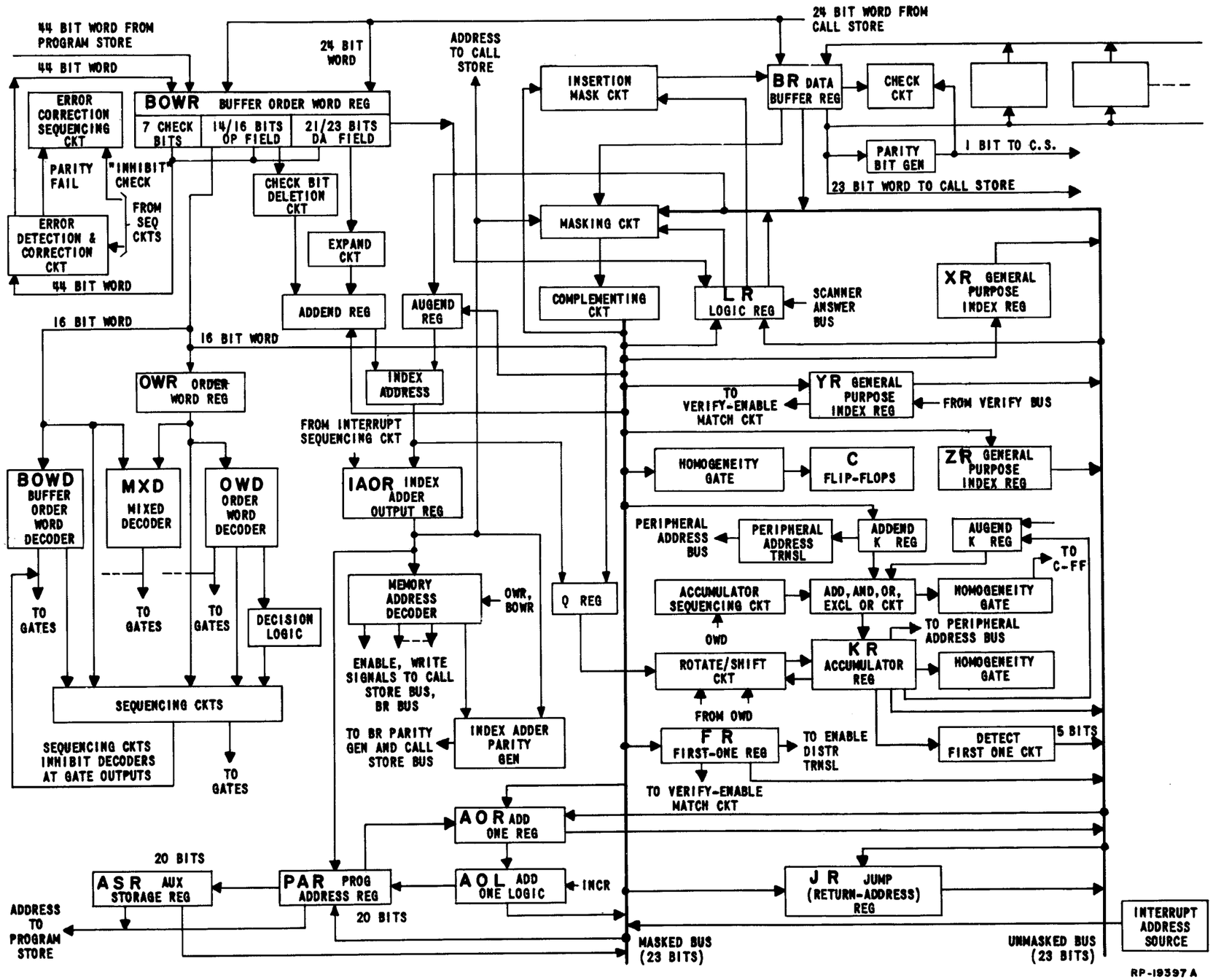

Figure 9-44 Central Control - Organization

TCI Library: www.telephonecollectors.info

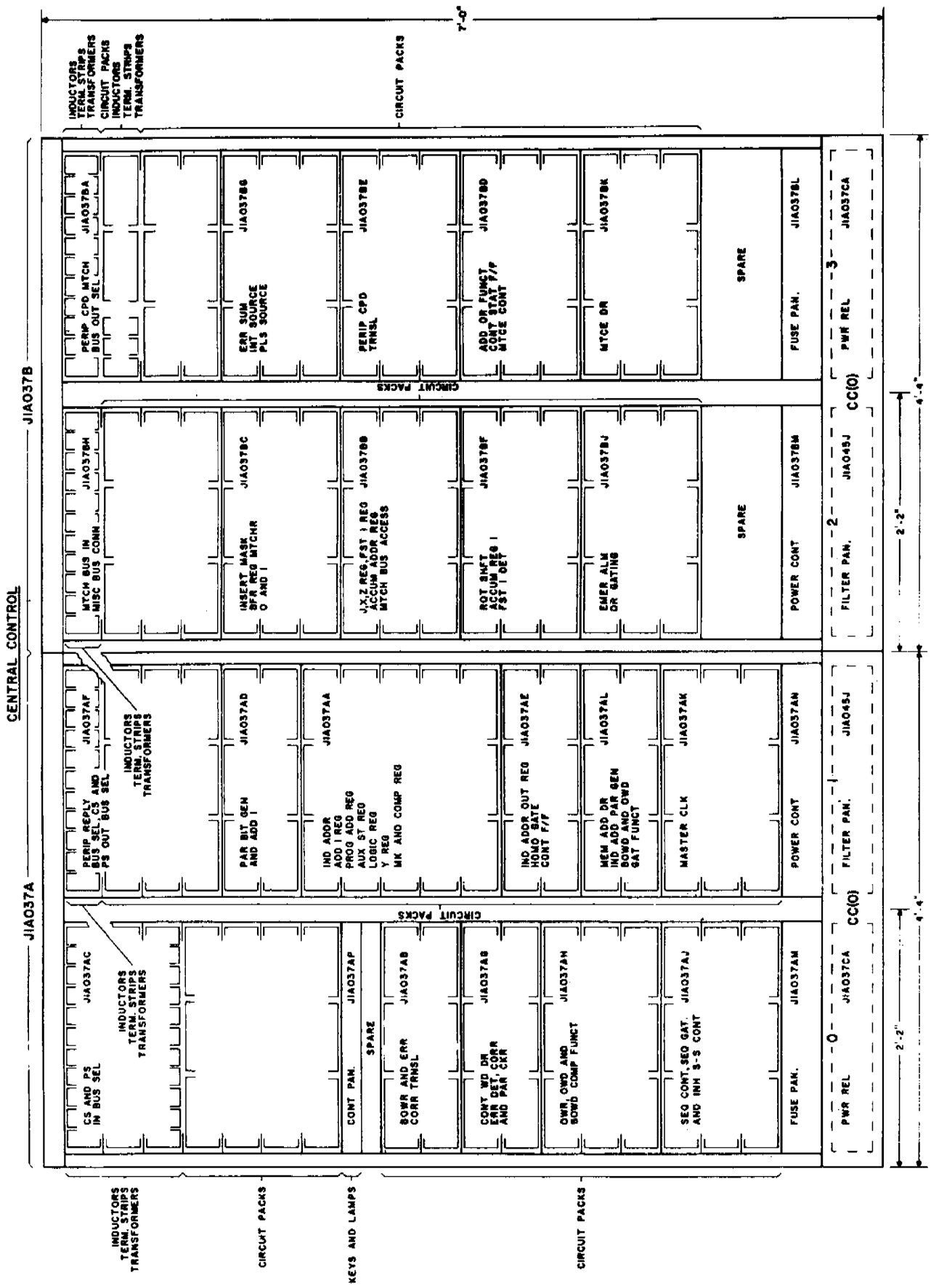

Figure 9-45 Central Control Frame

TCI Library: www.telephonecollectors.info

9.6 BUS SYSTEM

Information is exchanged among units over routes of the type shown schematically in Figure 9-46. A group of leads, referred to as a bus, provides a common highway that serves a multiplicity of units. A gating scheme allows the bus to be time-shared by the different units it serves. This arrangement eliminates the need for many individual unit-to-unit interconnections. With very few exceptions, the flow of information on any particular bus lead is always in the same direction.

In a No. 1 ESS without any SP's there are four major bus systems. These connect the two CC's with: (a) PS's, (b) CC CS's, (c) CPD's and (d) PU's.

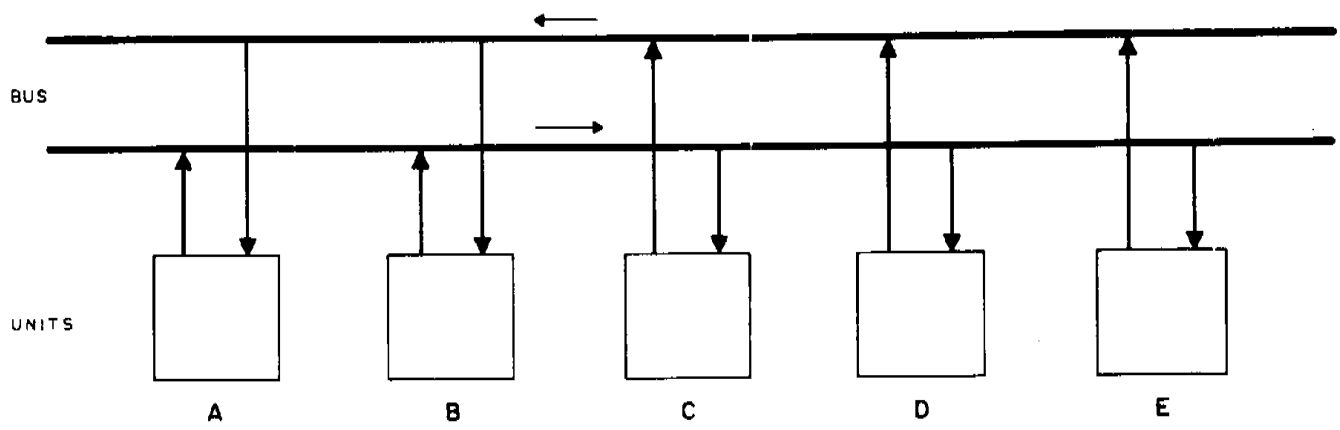

Figure 9-46 Basic Bus Scheme

Two methods are used to select, or enable, the unit that must respond to information transmitted over a bus having access to several other units. The first method is used to enable CS's, PS's and SP's. These units are assigned "names" in the form of unique binary combinations. Simultaneously with the information to be acted upon, a "code" is transmitted over a number of bus leads to all the units on the bus. A unit can receive the rest of the information only if it has a name that matches the enabling code. The second method of enabling is used for CPD's and PU's. Via a CPD, an enabling pulse is transmitted over a private path to the desired unit.

TCI Library: www.telephonecollectors.info

A. ELECTRICAL FEATURES OF BUSES

Signals are transmitted over the buses by means of 12-volt pulses approximately 0.5 usec wide. These pulses may be applied as often as once every 5.5 usec. Thus, the buses must be able to transmit high-frequency signals; they must also be relatively insensitive to ambient electrical noise.

A balanced-to-ground, twisted pair of 26-gauge wires is provided for each bit in a bus. As an example, Figure 9-47A shows a pair for transmitting an address bit from the CC to the program (or call) stores. To minimize reflections that would cause undesired multiple operations, the pair is terminated at both ends with a 100 ohm nominductive resistor. A center-tapped inductor is bridged across the pair to provide a path to ground for unwanted longitudinal signals. Each pair is transformer-coupled to a number of cable drivers and cable receivers. The driving transformers are bridged across the bus pair, whereas the receiving transformers are connected in series. The transmission time over a pair is 2 usec per 1,000 feet; the loss introduced is 6 db per 1,000 feet. Figure 9-47B is the circuit representation of Figure 9-47A.

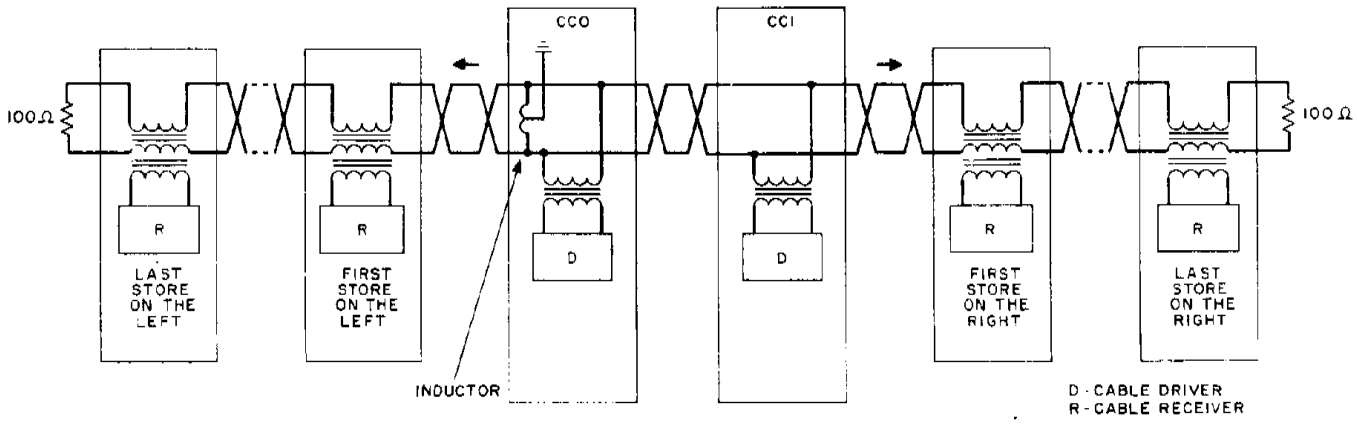

Figure 9-47A Typical Bus Pair

TCI Library: www.telephonecollectors.info

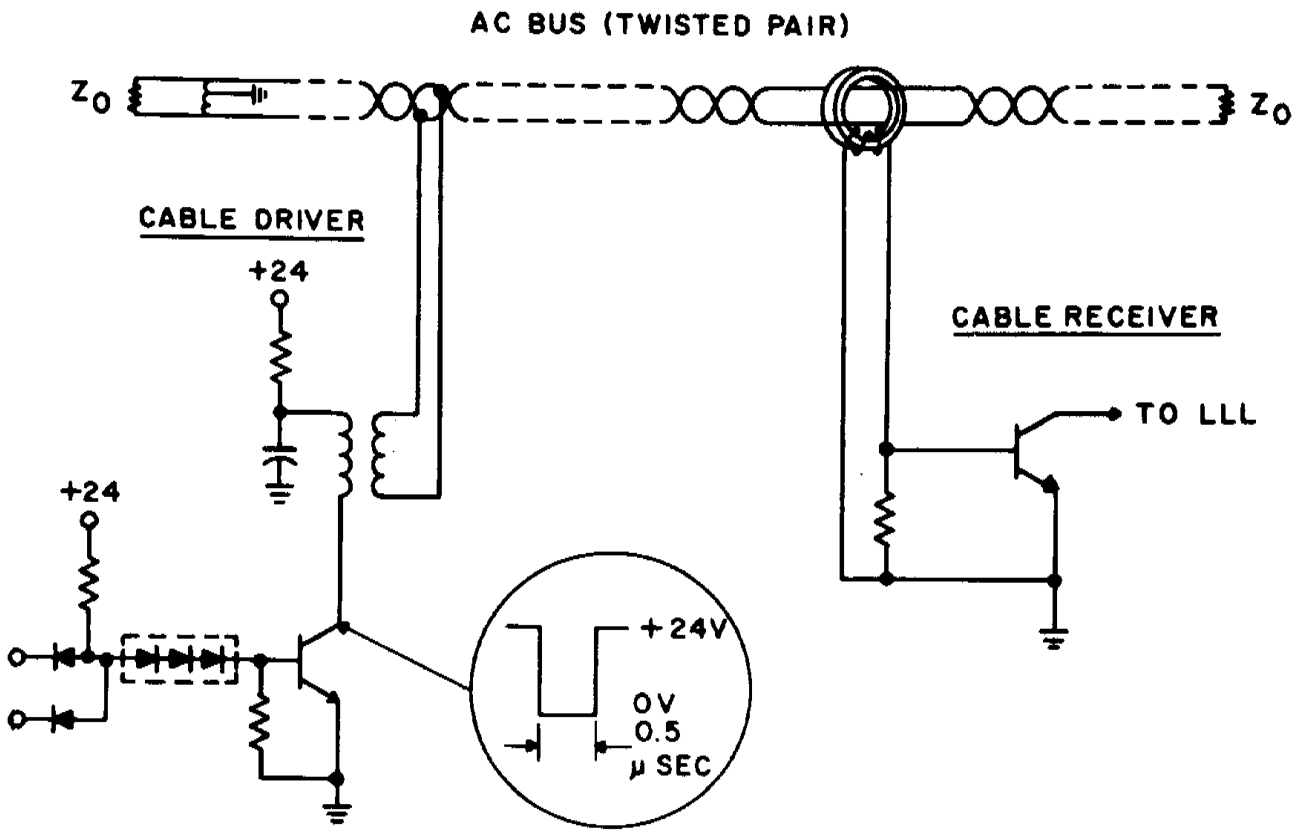

Figure 9-47B Typical Bus Pair Schematic

9.7 CENTRAL PULSE DISTRIBUTOR

A. GENERAL

Central pulse distributors (CPD's) provide central control (CC) with fast access to many points throughout the central office.

Upon receiving an order from CC, a CPD selects and pulses one of 768 outputs, as specified by the address from CC. Of the outputs, 512 are unipolar; that is, pulses of only one polarity can be supplied by them. The remaining 256 are bipolar; that is, each can supply a pulse of either polarity (positive or negative). The outputs are connected over private paths to the points controlled.

TCI Library: www.telephonecollectors.info

Unipolar outputs are used mainly to enable peripheral units (PU). Bipolar outputs are used to control flip-flops and other logic circuits in various units. The minimum interval between consecutive requests from CC to a CPD is 11 usec.

The interconnections between CC and the CPD's are shown in Figure 9-48. The CC determines which of the two buses is to be used and transmits a signal to all CPD's over the bus choice lead of that bus.

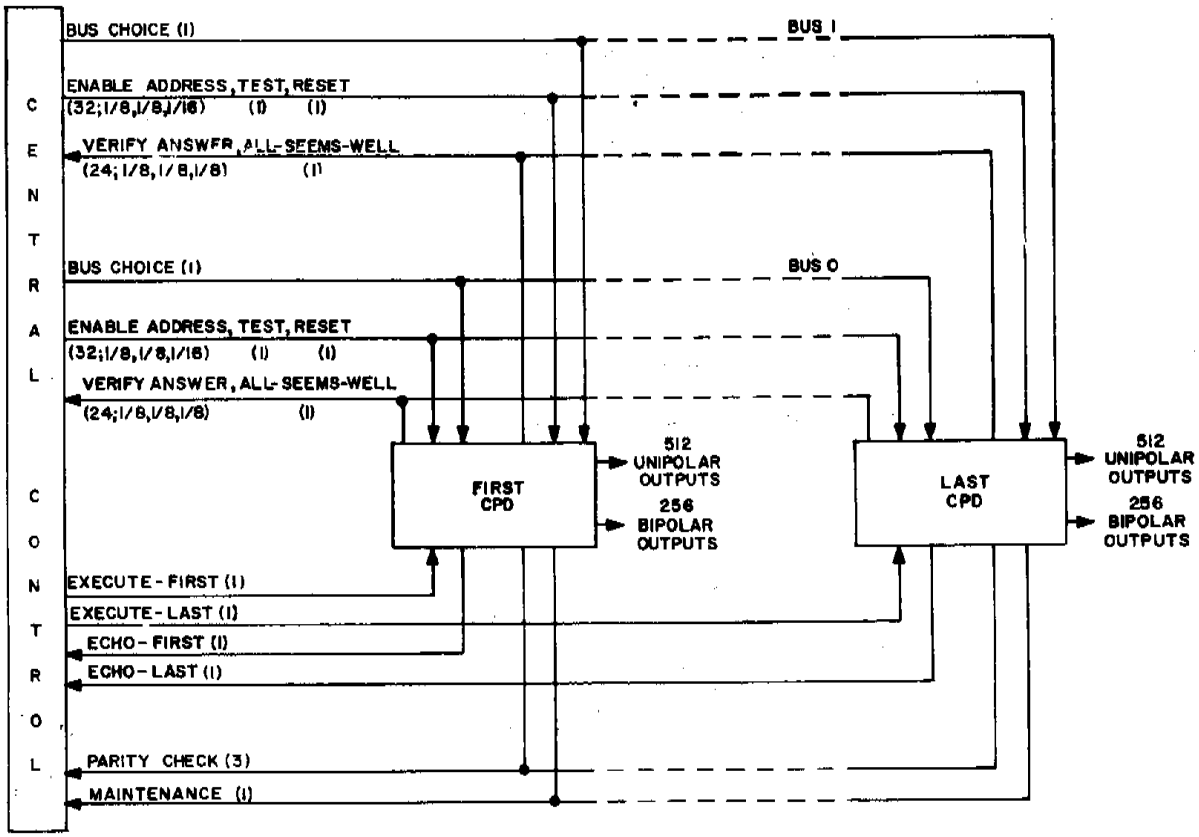

Figure 9-48 Communication Between Central Control and Central Pulse Distributors

Then, via the chosen bus, CC transmits an address which is received and stored by all CPD's. The address consists of three parts: a 1-out-of-8 X code, a 1-out-of-8 Y code, and a 1-out-of-16 Z code. This information specifies

TCI Library: www.telephonecollectors.info

one of the 512 unipolar outputs or one of the 256 bipolar outputs together with the polarity of the pulse to be supplied by it. Finally, CC transmits an execute signal over a private path to the CPD that is to execute the order.

Figure 9-49 shows the basic organization of a CPD. The predecoder, decoder, and matrix are three consecutive stages of selection. In each stage, an output is activated when one of the horizontal inputs and one of the vertical inputs are activated in coincidence.

When a PU controller receives an enable pulse from a unipolar CPD output, it returns a verfiy signal over the same path. The matrix steers this verify signal to the encoder which translates it into a verify answer in a 1-out-of-8, 1-out-of-8, and 1-out-of-8 code. The verify answer is sent to CC where it is compared with the enable address initially transmitted.

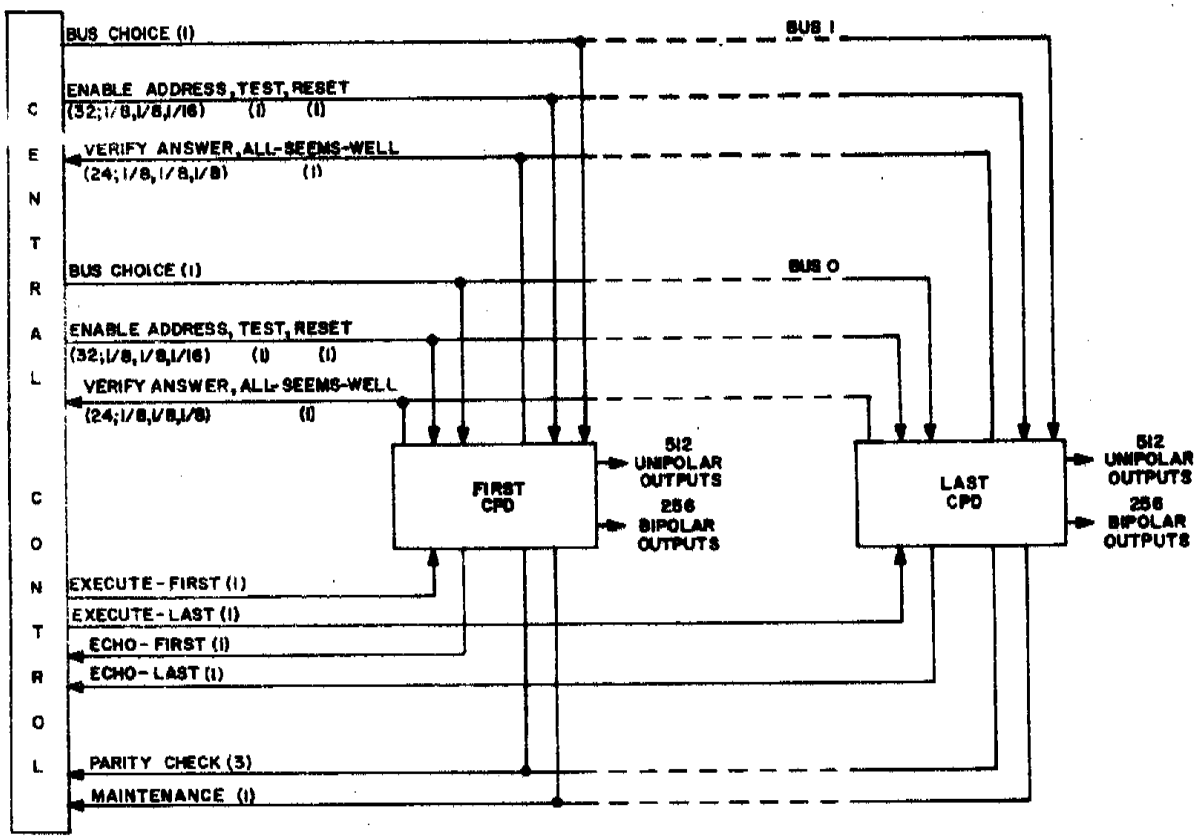

Figure 9-49 Basic Central Pulse Distributor

TCI Library: www.telephonecollectors.info

B. METHOD OF OPERATION

1. General

The CPD requires three communications in rapid succession from CC: The bus choice, the address, and the execute signal (see Figure 9-50).

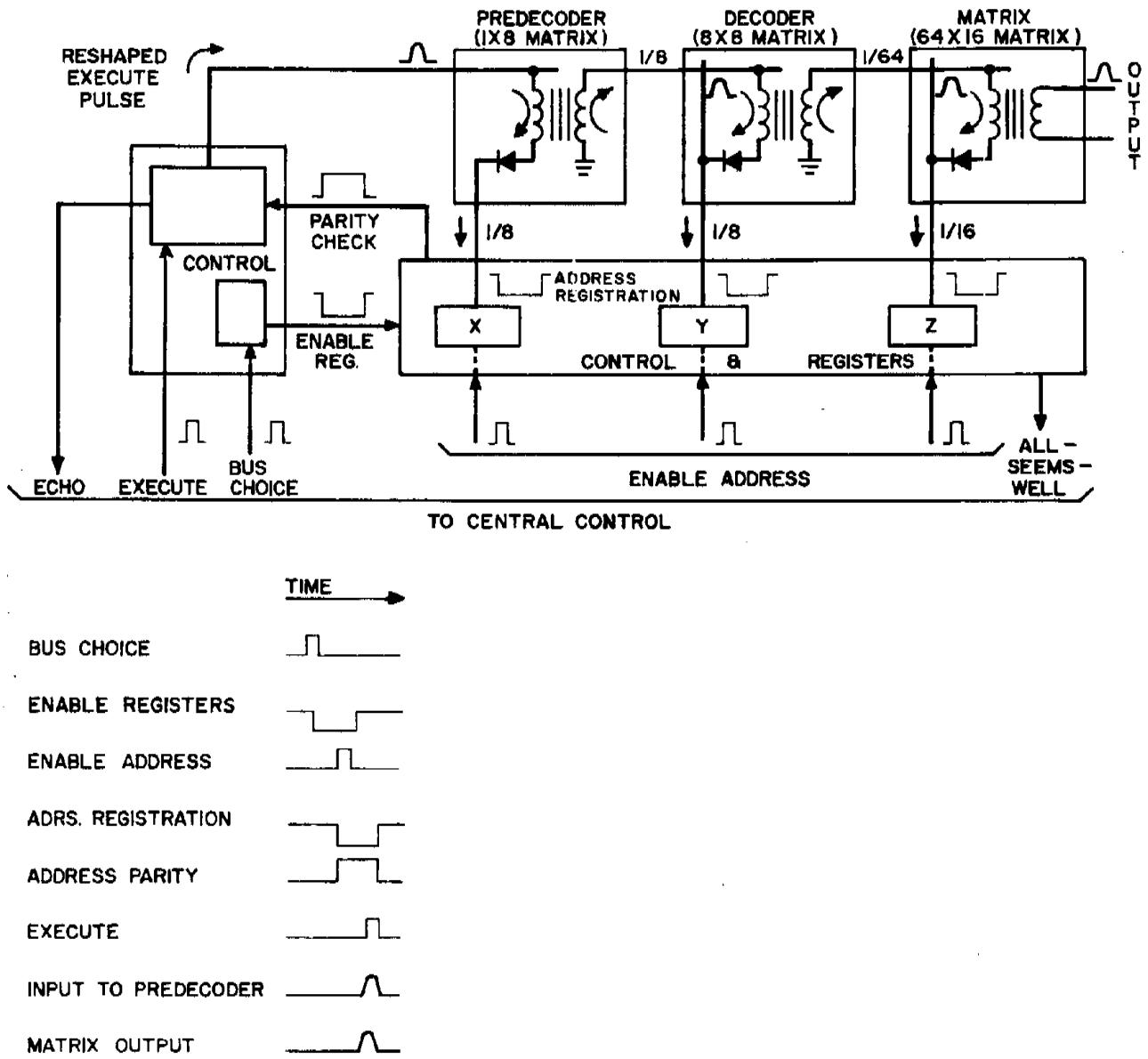

Figure 9-50 Communications From Central Control

TCI Library: www.telephonecollectors.info

When the 0.5 usec bus choice pulse is received, it generates a 2 usec pulse that enables three sets of registers (X, Y and Z) to receive the address pulses from the bus designated by the bus choice. The bus choice pulse also generates a 4 usec pulse, during which both verify answer buses are inhibited and at the end of which trouble detecting circuitry is returned to normal.

When the address pulses arrive and are registered, the control circuitry makes a parity check to determine whether a legitimate address has been received. The address is registered long enough to enable the execute pulse to activate the corresponding matrix output.

When the execute pulse is received, it is reshaped and applied to the predecoder input if the address parity check has been successful. The reshaped execute pulse is transmitted from the decoder input to the matrix output via three transformer-coupled stages shown in Figure 9-51. In addition, the 0.5 usec execute pulse causes the following circuit operations:

(a) An echo pulse is returned to CC which uses it to verify that the execute pulse has been received by the proper CPD.

(b) If the address parity is correct and the output pulse has an appropriate value of current, an all-seems-well (ASW-CPD) pulse is transmitted to CC.

(c) The results of the X, Y and Z parity checks are transmitted to CC.

C. DUPLICATION AND MAINTENANCE

CPD's are provided in pairs up to eight. The units in each pair operate independently of one another. One CPD of each pair is even-numbered; the other, odd-numbered.

For the CPD output signals used to enable PU's, redundancy is provided by having four paths by which CC is given access to each PU. Which of the four paths is used is determined by route information stored in the call store (CS).

TCI Library: www.telephonecollectors.info

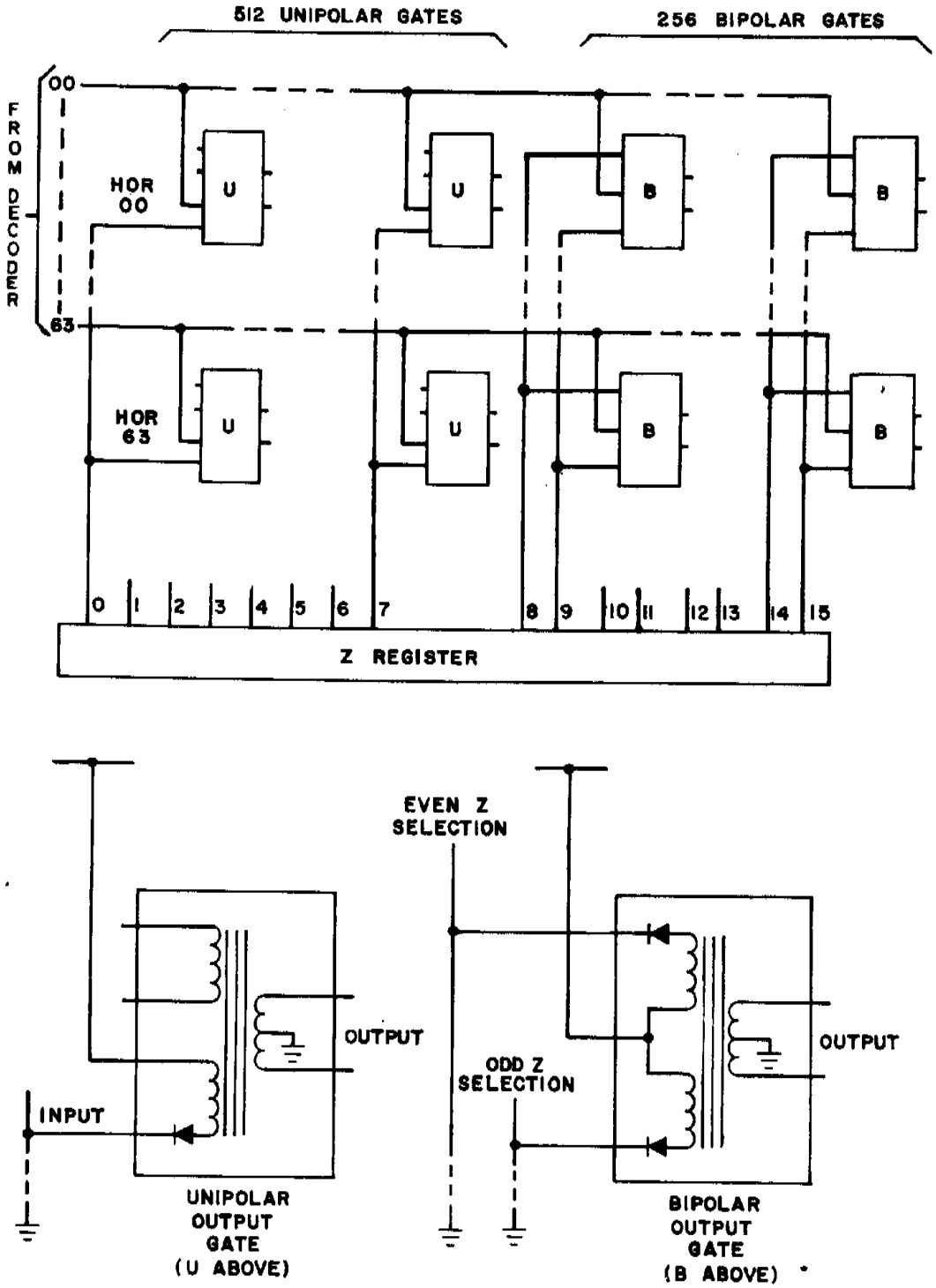

Figure 9-51 Transmission of Execute Pulse Through the Matrix

TCI Library: www.telephonecollectors.info

As shown in Figure 9-52, full duplication is provided for the bipolar CPD outputs which are used to control flip-flops and logic circuitry throughout the central office. Two CPD outputs having identical enable addresses in the two CPD's of a pair are multipled and then wired to the terminating circuitry.

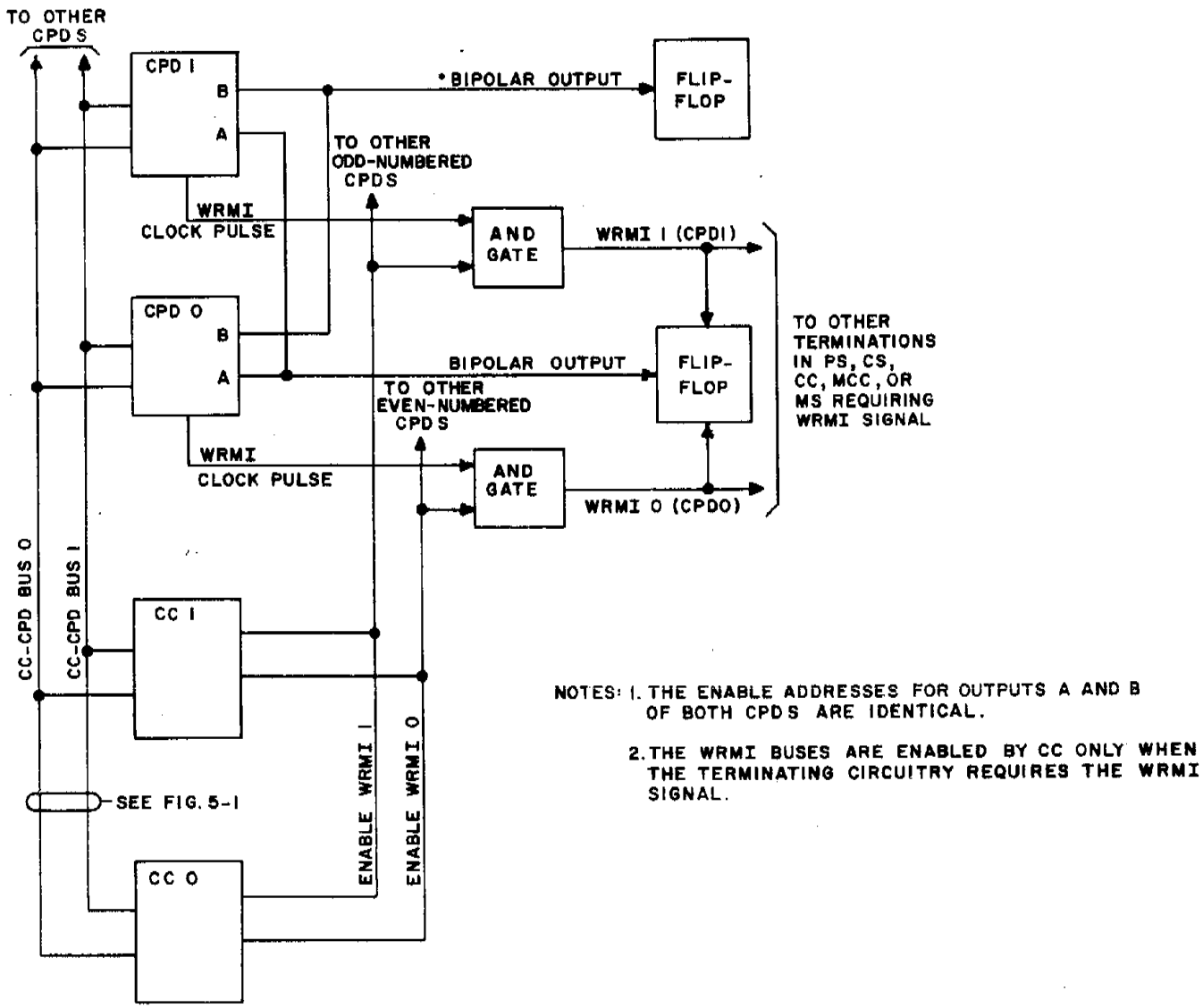

Figure 9-52 Duplication of Bipolar Outputs

TCI Library: www.telephonecollectors.info

Some bipolar outputs are used to control flip-flops that can critically affect the operation of the system. For these outputs, a safeguard is provided to prevent a noise signal on a CPD output from causing an undesired change of state in the associated flip-flop. A pulse on a protected CPD output is not effective unless a we-really-mean-it (WRMI) signal is simultaneously present on a common lead.

Whenever a CPD receives an execute pulse, if the parity check of the address was successful, it generates a WRMI clock pulse (Figure 9-52). CC generates an enable WRMI signal only when required by the nature of the flip-flop to be reached. At the CPD frame where both a WRMI clock pulse and an enable WRMI signal are present, a WRMI pulse is generated and fanned out to all the units that are served by that CPD and require the WRMI signal.

1. Maintenance Modes

Many detected troubles are treated by denying to CC the use of a particular bus choice or CPD choice. This is done by altering a route record which is kept in a CS. This mode of operation is called marked-in-trouble mode (MITM) with the words "in memory" implied. When a CPD is in this mode, a diagnosis has been or will be made. When the fault is cleared, the route record is updated to permit CC to use the route previously denied.

Certain matrix troubles produce parity check failures despite the fact that valid enable addresses have been received by the CPD. In this situation, CC orders the other CPD in the pair to pulse a bipolar output which activates circuitry within the faulty CPD. This circuitry then causes the CPD to ignore any parity check failures. This mode of operation is called parity-inhibited mode (PIM). When a CPD is in this mode, a diagnosis has been or will be made. CC can still make use of the CPD. To return the CPD to the normal mode of operation, CC orders the other CPD in the pair to produce a pulse that deactivates the circuitry formerly activated.

Should a CPD start generating output signals without orders from CC, power to generate these outputs must be quickly removed. In this situation, CC orders the other CPD in the pair to pulse a

TCI Library: www.telephonecollectors.info

bipolar output which is connected to circuitry within the faulty CPD. This circuitry then releases the normally operated power distributing relay. This mode of operation is called the quarantine mode (QM). In this mode, a diagnosis has been or will be made, and the CPD is not available for system use. To return the CPD to normal mode of operation, CC uses either of two methods to reoperate the power distributing relay:

(a) Transmitting a signal on the restore (R0 or R1) lead that is common to all CPD's.

(b) Ordering the other CPD in the pair to pulse an appropriate bipolar output.

D. POWER

Each pair of CPD's is supplied with +24 volts over two power buses. The power for the even-numbered CPD is fed by the +24-0 bus; for the odd-numbered CPD, by the +24-1 bus. Power can be manually removed at the CPD frame.

E. EQUIPMENT ARRANGEMENTS

A CPD is mounted on a single frame. Communication bus apparatus occupies five 4-inch mounting areas at the top of the frame. Presently CPD pairs occupy a double framework.

9.8 SCANNERS

A. GENERAL

Unlike previous dial central office systems, the No. 1 ESS has no individual line or supervisory relays to indicate call originations or terminations on lines and trunks. In addition to supervising on-hook and off-hook conditions, the system must monitor dial pulses and observe the electrical state of various points within the central office for administrative, diagnostic and other purposes.

Input information of this nature is furnished to the No. 1 ESS by the operation of scanners which sample or scan lines, trunks and various other circuits at discrete intervals of time as directed by the system.

Each point to be scanned is connected to a current sensing device called a ferrod sensor. Ferrods are organized in groups of 16 within arrays or matrices of 16 by 16 (256), 16 by 32 (512), or 16 by 64 (1,024) scanpoints. A scanner

TCI Library: www.telephonecollectors.info

can select and interrogate any group of 16 ferrods as specified by information received from the central control (CC) or signal processor (SP). To simplify the description, only CC will be mentioned as the unit controlling the scanners. It is to be understood, however, that an SP can perform this function in larger offices equipped with SP's.

Depending upon the state of the scanned circuit, each of the 16 ferrods interrogated results in a pulse or no pulse output which is referred to as a 1 or 0 readout, respectively. Thus, in response to signals from CC, a scanner produces a 16-bit output word that is transmitted to CC where it is interpreted.

The main inputs and outputs for a scanner are shown in Figure 9-53. When a scanner operation is needed, CC sends to the central pulse distributor (CPD) information that identifies the particular scanner to be activated. The CPD accordingly sends an enable signal to that scanner on a private pair of leads. The scanner sends back a verification signal on the same pair of leads. A scanner address is transmitted by CC on the common peripheral unit address bus 0.5 usec after the enable pulse. Only the scanner that has received the enable pulse can respond to the address which specified a particular group of 16 ferrods to be interrogated. The resulting readout, or scanner answer, is sent back to CC. Under normal conditions, an all-seems-well scanner (ASW-S) signal is also transmitted by the interrogated scanner. The all-seems-well signal indicates that, as intended, one and only one group of ferrods has been interrogated.

The operate time of a scanner is between 1.8 usec and 2.5 usec, measured from the time an address is received from the bus to the time the readout is applied to the answer bus. A scanner may be addressed at a maximum rate of once every 11 usec.

Five types of scanners, shown in Table 9-2, are used in No. 1 ESS. The scanners differ mainly in the number and type of ferrods used. The control of all scanners is essentially identical. The total number of scanpoints required in a central office is about 1.5 times the number of lines in the office.

TCI Library: www.telephonecollectors.info

TABLE 9-2

TYPE OF SCANNERS

Type of Scanner	Location	Function	Matrix Size	Ferrod Sensor Assembly
Line	Line Switch Frame (4 to 1) (Basic & Supplementary)	Detection of call origination by customer (off-hook)	16 by 64 (1,024)	1B
	*Line Switch Frame (2 to 1) (odd or even numbered)		16 by 32 (512)	
Junctor	Junctor Frame	Supervision of intra-office calls	16 by 32 (512)	1C
Universal Trunk	Universal Trunk Frame	Supervision of inter-office calls	16 by 32 (512)	1C and 1D
		Supervision of miscellaneous trunk and service circuits		
Master	Master Scanner Frame	Monitoring of dial pulses. Monitoring of points within the electronic central office for various purposes such as routine tests, trouble diagnosis, administration, and other requirements.	16 by 64 (1,024)	1D

*For each pair of odd and even numbered frames, the control for both 512-point matrices are located on the even numbered frame.

TCI Library: www.telephonecollectors.info

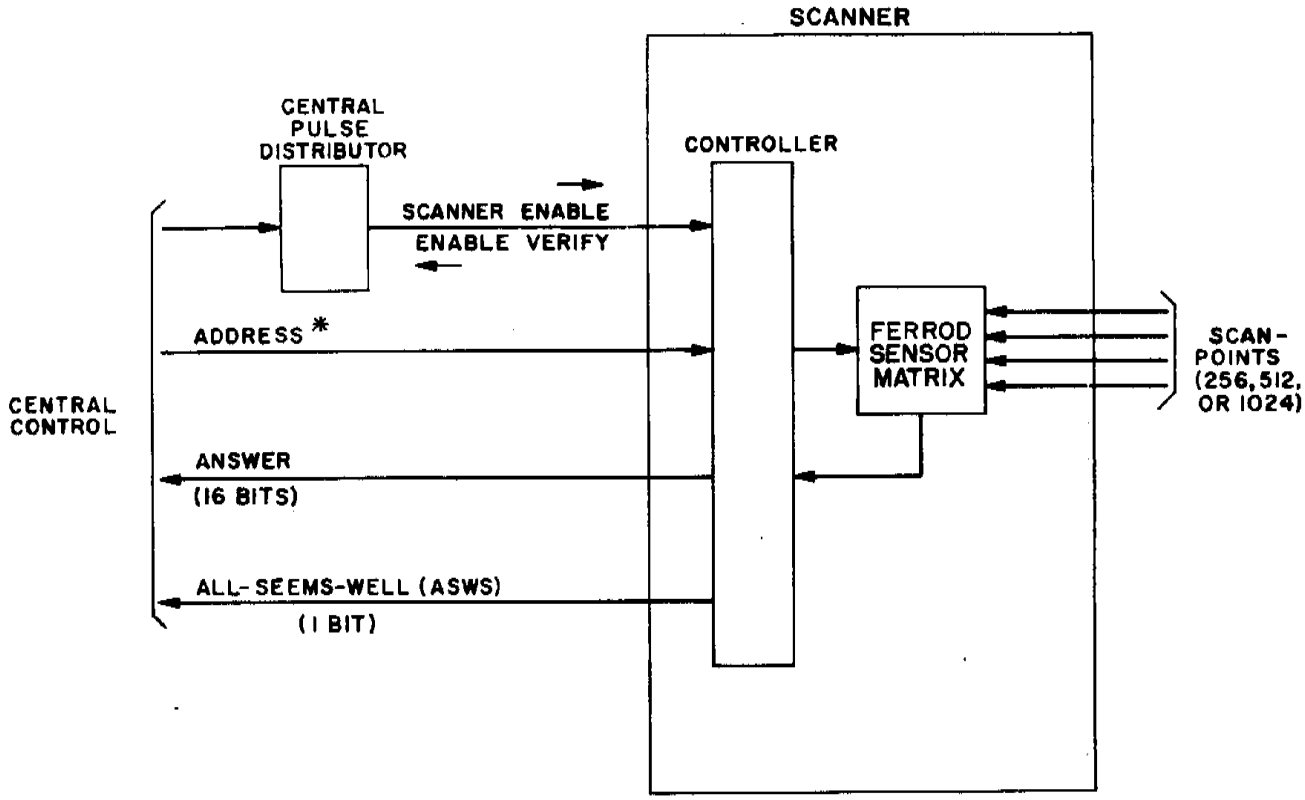

* 8, 12, OR 16 BITS, DEPENDING ON SIZE OF SCANNER

Figure 9-53 Main Inputs and Outputs for Scanners

B. THE FERROD SENSOR

It is necessary to understand the operation of the ferrod sensor before the scanners can be described further. The ferrod is essentially a transformer in which the magnetic coupling between the interrogate and readout windings is determined by the current in the control windings. This current, in turn, reflects the state of the circuit to be sensed, such as the on-hook or off-hook condition of a line. A typical ferrod arrangement is shown in Figure 9-54. Two control windings are wound around a rod of ferrite material. In addition, a single-turn interrogate winding and a single-turn readout winding are threaded through two holes in the center of the ferrite rod. The control windings are connected in series with the circuit to be sensed or supervised, for instance, a customer line.

TCI Library: www.telephonecollectors.info

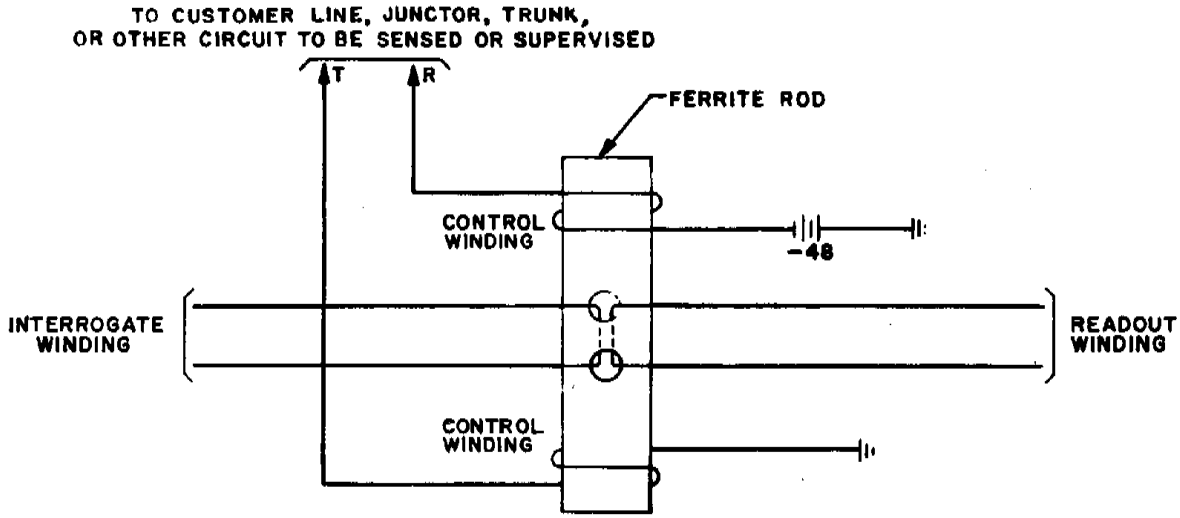

Figure 9-54 Typical Ferrod Arrangement

When a pulse is applied to the interrogate winding while the control windings are energized, practically no signal is induced in the readout winding and the readout is said to be 0. This is because the magnetic flux caused by the current in the multiturn control windings saturates the ferrite rod; consequently, the magnetic coupling between the single-turn interrogate and readout windings is greatly reduced. On the other hand, when a pulse is applied to the interrogate winding while the control windings are not energized, a change of flux is induced in the area immediately surrounding the two holes in the ferrite rod. A pulse is induced in the readout winding and the readout is said to be 1. Thus, when an interrogate pulse is applied, the presence or absence of a readout pulse indicates whether the circuit being observed is open or closed, respectively. If the circuit being observed is, for instance, a customer line, the on-hook (open) condition results in a 1, the off-hook (closed) condition in a 0.

TCI Library: www.telephonecollectors.info

C. TYPES OF INDIVIDUAL FERRODS

There are four basic types of individual ferrod units which are combined to make up three types of ferrod assemblies.

1. Type 1 - Loop-Start Line Ferrod

The type 1 ferrods are used in line scanners to recognize the initial request for service from ordinary customer lines which operate on a loop-start basis. In loop-start operation, a call is originated by closing the tip and ring loop through the customer telephone set. A contact protection network is connected across the control windings of the ferrod to protect the ferreed cutoff contacts. These contacts are used to disconnect the line ferrod after the central office equipment has responded to the request for service. (This is similar to the cutoff of the line relay in other telephone systems when the operator answers or when the dial system starts to process the call.)

The loop/start circuit will work satisfactorily over the expected range of No. 1 ESS battery voltages (43-52 volts) with a maximum external loop, including subset, of 2,800 ohms. A minimum tip-to-ring leakage resistance of 10,000 ohms is permissible.

2. Type 2 - Combination Loop-Start or Ground-Start Line Ferrod

Type 2 ferrods are also used in line scanners to recognize initial requests for service. By means of optional wiring, the type 2 ferrod can be adapted to loop-start operation of ordinary customer lines or to ground-start operation of coin and PBX lines. (In ground-start operation, a call is originated by grounding one side of the line at the coin station or PBX.)

The ground-start circuit will work satisfactorily over the expected range of battery voltages with a ground potential variation of ± volts, if the maximum external resistance is less than 1,800 ohms. A minimum leakage resistance of 10,000 ohms is permissible. An auxiliary line circuit can be used for either loop-start or ground-start operation, in cases where there is excessive ground potential, longitudinal current, or leakage.

TCI Library: www.telephonecollectors.info

3. Type 3 - Junctor Ferrod

The type 3 junctor ferrods are used in junctor scanners to supervise either side of line-to-line connections. Junctor ferrods are also used in trunk scanners to supervise the local customer side of line-to-trunk and trunk-to-line connections. The distant office side of interoffice connections is supervised by a type 4 ferrod which is a more sensitive device. Typical circuit applications of the type 3 junctor ferrod are shown in Figure 9-55. In these circuits a transmission path is provided between two lines or between a line and a trunk. At the same time, each line or trunk has a separate dc circuit for supervisory purposes and to supply talking battery. These circuit arrangements are similar to the methods used to split supervision in other dial central office systems and operator cord circuits.

The junctor ferrod can supervise a maximum external loop of 1,900 ohms, measured at the tip and ring terminals of the junctor circuit, over the expected range of central office battery voltages. A minimum leakage resistance of 10,000 ohms is permissible.

4. Type 4 - Trunk Ferrod

The type 4 ferrods are used in the master scanners to supervise miscellaneous trunk and service circuits and to supervise the distant office side of interoffice connections. They are also used in the master scanner (MS) to monitor various points within the circuitry of the electronic central office units.

The trunk ferrod is the most sensitive used in No. 1 ESS. It can supervise loops up to 10,700 ohms resistance external to the ferrod. Tip-to-ring, or equivalent, leakage resistance of the trunk must be greater than 30,000 ohms.

D. FERROD ARRAYS

The basic apparatus mounting for ferrods contains 128 cells arranged in an 8 by 16 array. Each cell holds one assembly of two ferrods; therefore, each apparatus mounting contains 256 ferrods. The steel box and separators serve as a magnetic and fire shield between ferrod assemblies. A scanner is made up of one, two, or four apparatus mountings to hold a total of 256, 512, or 1,024 ferrods.

TCI Library: www.telephonecollectors.info

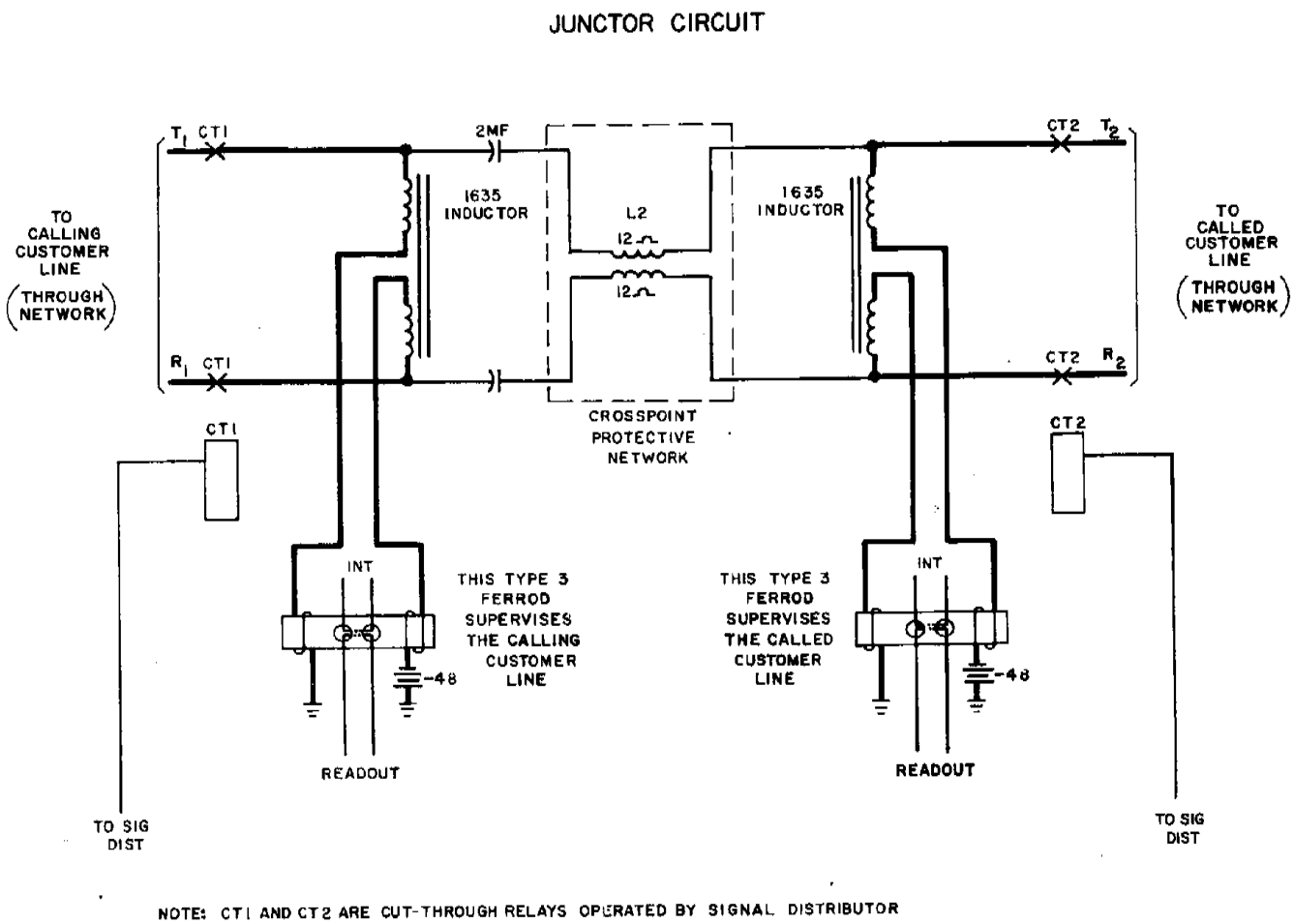

Figure 9-55 Junctor Supervision Using Type 3 Ferrods

E. METHOD OF OPERATION

There are two main sections in each scanner: the current-sensing ferrods, which are wired to the points to be supervised, and a controller. The controller is used by CC to gain access to the interrogate windings of the ferrods and to detect the readout from a selected group of 16 ferrods.

The basic operation of scanners based on a 512-point unit is illustrated by the simplified diagram in Figure 9-56. Duplication and other considerations will not be covered.

TCI Library: www.telephonecollectors.info

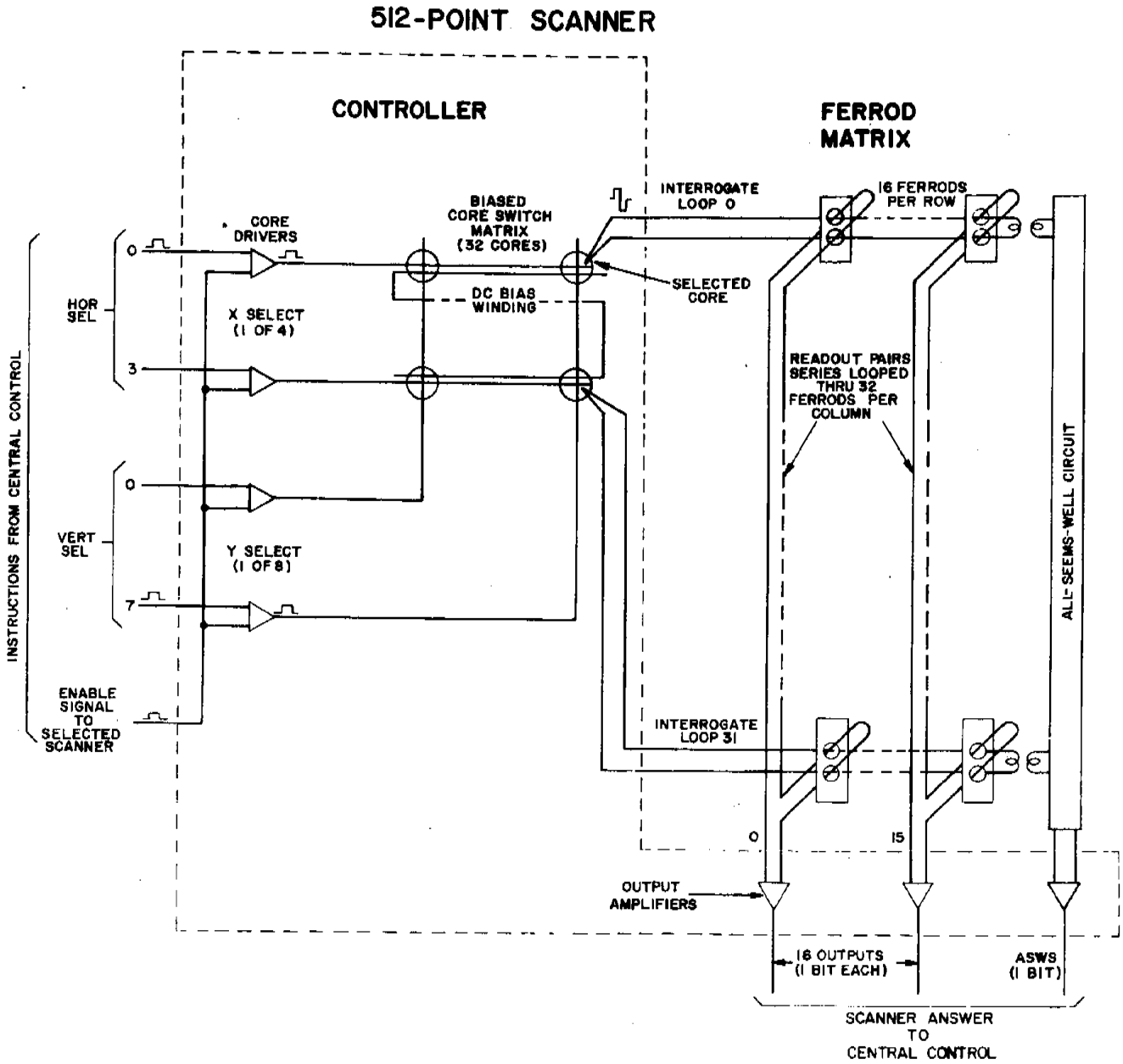

Figure 9-56 Scheme for Coincident Current Selection of One Group of Sixteen Scanpoints

TCI Library: www.telephonecollectors.info

All scanners on the same bus system are addressed simultaneously but only one scanner receives an enable signal. The size of the address varies with the size of the scanner. In a 512-point scanner, the address consists of 12 bits in a 1-out-of-4 (1/4) and a 1-out-of-8 (1/8) code. The address for a 256-point scanner has 8 bits (1/4 and 1/4 code) and for a 1,024-point scanner, it has 16 bits (1/8 and 1/8 code). In the example of Figure 9-56 for a 512-point scanner (1/4 and 1/8 code), a pulse is present on only one of the upper four and one of the lower eight leads on the left. Only the two core drivers, whose inputs are both 1, generate pulse outputs which select a particular row and column in the biased core matrix. Only the magnetic core at the intersection of the selected row and column receives a drive in both the X and Y leads. This combined drive is sufficient to overcome the dc bias and switch the core. When the core switches, a pulse is induced in the associated interrogate loop. A similar interrogate loop is associated with each of the 32 cores of the matrix. Only one interrogate loop is pulsed for each address.

Each interrogate loop passes through 16 ferrods in series; therefore, pulsing one interrogate loop results in the readout of 16 bits. As previously explained, the presence or absence of current in the control windings of each ferrod determines whether the corresponding readout bit is 0 or 1, respectively. In this manner, 16 scanpoints are observed at the same time.

F. MODES OF OPERATION

Three different control modes can be established in a scanner under program control:

(1) Normal: In this mode, either controller can be used to interrogate the ferrods. When one controller is operating the ferrod matrix, the other controller is considered to be in ready-standby.

(2) Marked-In-Trouble: In this mode, one controller is recorded in the temporary memory as being in trouble and is not to be used to interrogate the ferrod matrix for normal call actions.

(3) Quarantine: In this mode, power is removed from the controller by the program. Interlocks are provided to prevent both controllers from being quarantined simultaneously.

TCI Library: www.telephonecollectors.info

9.9 SIGNAL DISTRIBUTOR

A. GENERAL

Signal distributors (SD) are provided in trunk frames and junctor frames to give central control (CC) the necessary access to relays in trunk and junctor circuits. Thus, they are the buffers between the high-speed CC and the low-speed relays.

The basic SD is composed of a controller and a relay contact tree as shown in Figure 9-57.

Information from CC, called the address, is accepted and stored by the controller. Through the relay contact tree, the controller closes a unique metallic path to the specified relay winding and applies to it an appropriate signal to operate or release. The controller senses the operation or release of the selected relay and then returns itself and the relay contact tree to normal.

The controller is unavailable or busy to CC during the 25-msec interval between the storing of the address and the return to normal.

B. APPARATUS ELEMENTS - MAGNETICALLY LATCHING RELAY

Each output of the SD is connected to a magnetically latching wirespring relay. Two such relays are combined on one assembly.

The main characteristic of these relays is the remanent core material which retains enough residual magnetism to hold a relay operated after the operating current is removed. The relay releases when the residual magnetism is reduced by a current pulse in the direction opposite to that of the operating current. This characteristic makes possible the use of a single lead for operating and releasing a relay.

C. METHOD OF OPERATION

The basic SD, shown in Figure 9-57, provides 384 output terminals. Two of these basic units make up an SD as shown in Figure 9-58. In the normal mode of operation, known as the split mode, the two basic units operate independently.

TCI Library: www.telephonecollectors.info

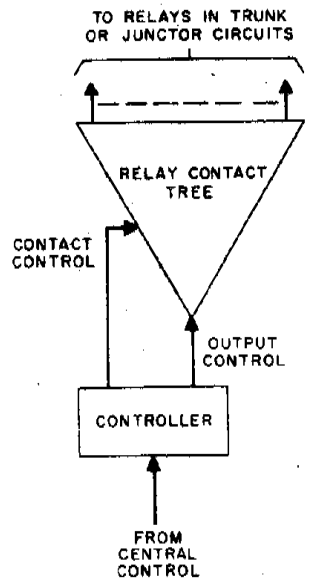

Figure 9-57 Basic Signal Distributor, Block Diagram

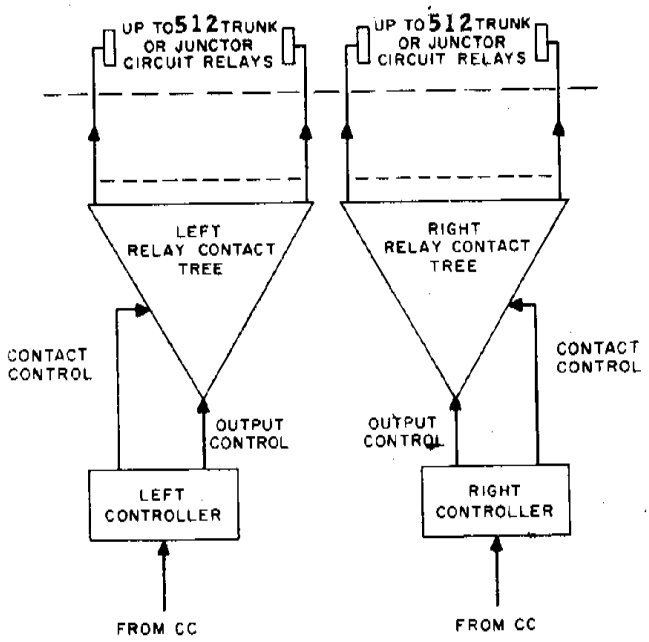

Figure 9-58 Signal Distributor, Block Diagram
Split Mode of Operation

TCI Library: www.telephonecollectors.info

The CC orders the central pulse distributor (CPD) to set a flip-flop in the enable-verify circuitry of the controller (Figure 9-59). This flip-flop, when set, changes the status of the controller from idle to busy and causes the generation of two pulses: one is sent back to the CPD for verification, the other enables the buffer registers to accept the address from the peripheral address bus.

The number of flip-flops in each buffer register is indicated by the numeral within the register. Thus, there are eight flip-flops in the A register, eight in the B register, and so on. The address sets only one flip-flop in each register. Each set flip-flop operates an associated mercury contact relay. For registers A, B and D, each operated mercury contact relay operates, in turn, a multi-contact wirespring relay.

As shown in Figure 9-60, a path is closed from either +24 or -48 volts to the selected magnetically latching relay. The -48 volt supply is used to operate the relay; the +24 volt supply to release it. The operation or release of the relay momentarily disconnects a resistance in parallel with the winding; this causes a change in current which is sensed by detecting circuitry in the controller. Figure 9-59 shows that the detection of this current change causes the resetting of all flip-flops in the controller. With these flip-flops reset, the controller status indication is immediately changed from busy to idle; the mercury contact relays and the wirespring relays are released.

D. DUPLICATION

As previously shown, the controlling circuitry of the SD is duplicated but not in the sense that one controller operates the whole SD while the other stands by ready to take over. Normally, one controller offers access to one half of the output terminals while the other controller offers access to the other half.

In each controller, all the flip-flops of the buffer registers are equipped to accept an address from either of the duplicated buses from CC (Figure 9-61). Each controller has two enable-verify circuits with enable flip-flops. The bus from which the address is to be taken depends upon which of the enable flip-flops is set by the CPD. If enable flip-flop 00 or 10 is set, the address is taken from address bus 0; if flip-flop 01 or 11 is set, from address bus 1.

TCI Library: www.telephonecollectors.info

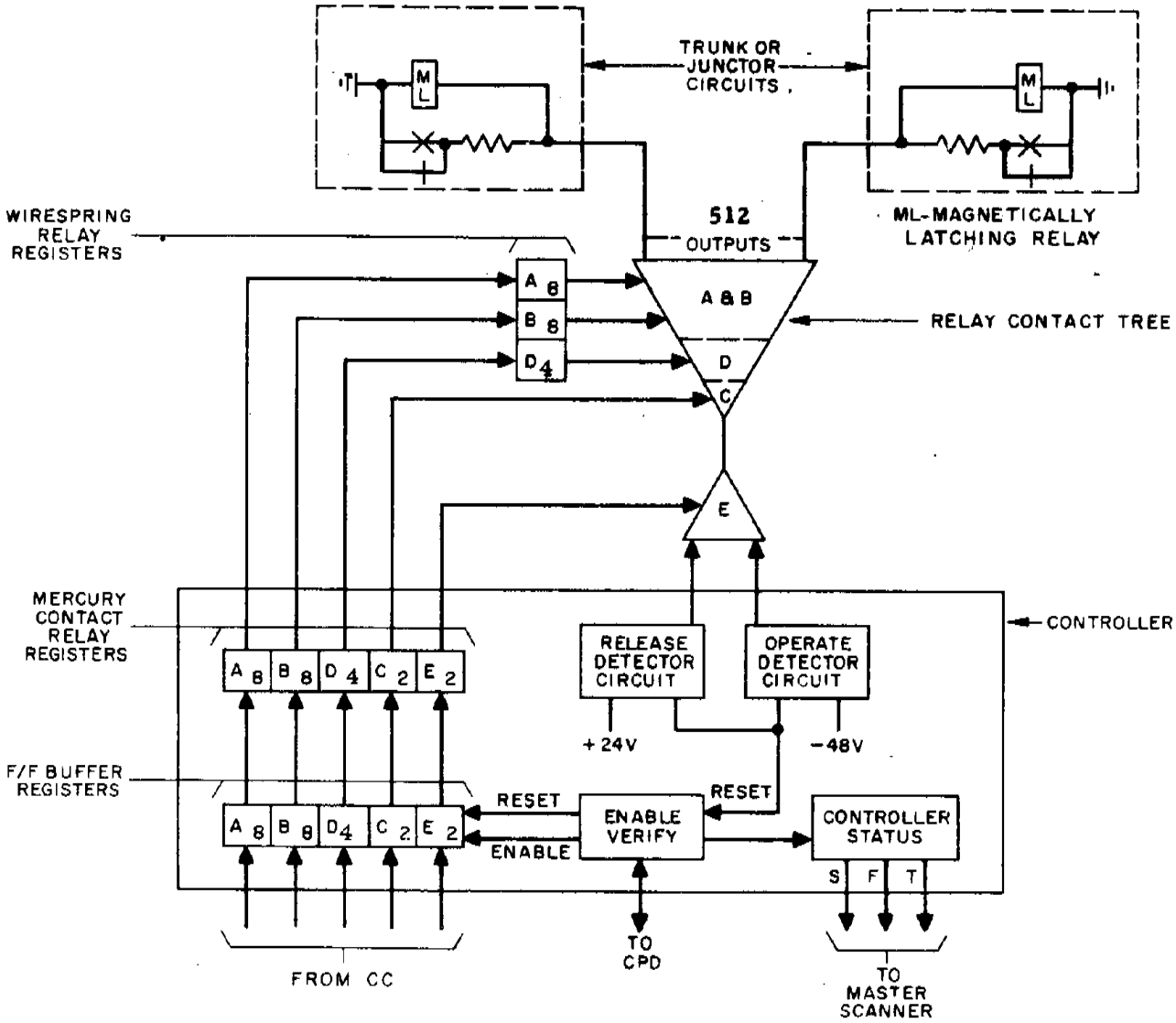

Figure 9-59 Basic Signal Distributor

E. RESET OF CONTROLLER FLIP-FLOPS BY CENTRAL CONTROL

When the selected magnetically latching relay operates or releases as a result of an order, the controller detector circuit resets all flip-flops, including the enable flip-flop. The CC periodically checks each controller's busy-idle status which is indicated by the state of the enable flip-flop. If a controller is found to have been busy for longer than the normal 25 msec, CC can reset, via the bus, all flip-flops in that controller.

TCI Library: www.telephonecollectors.info

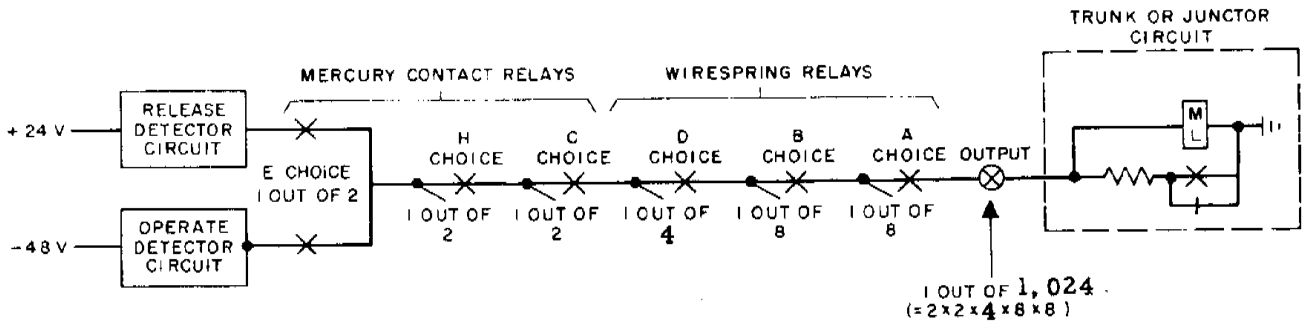

Figure 9-60 Complete Selection Path to Operate or Release a Magnetically Latching Relay

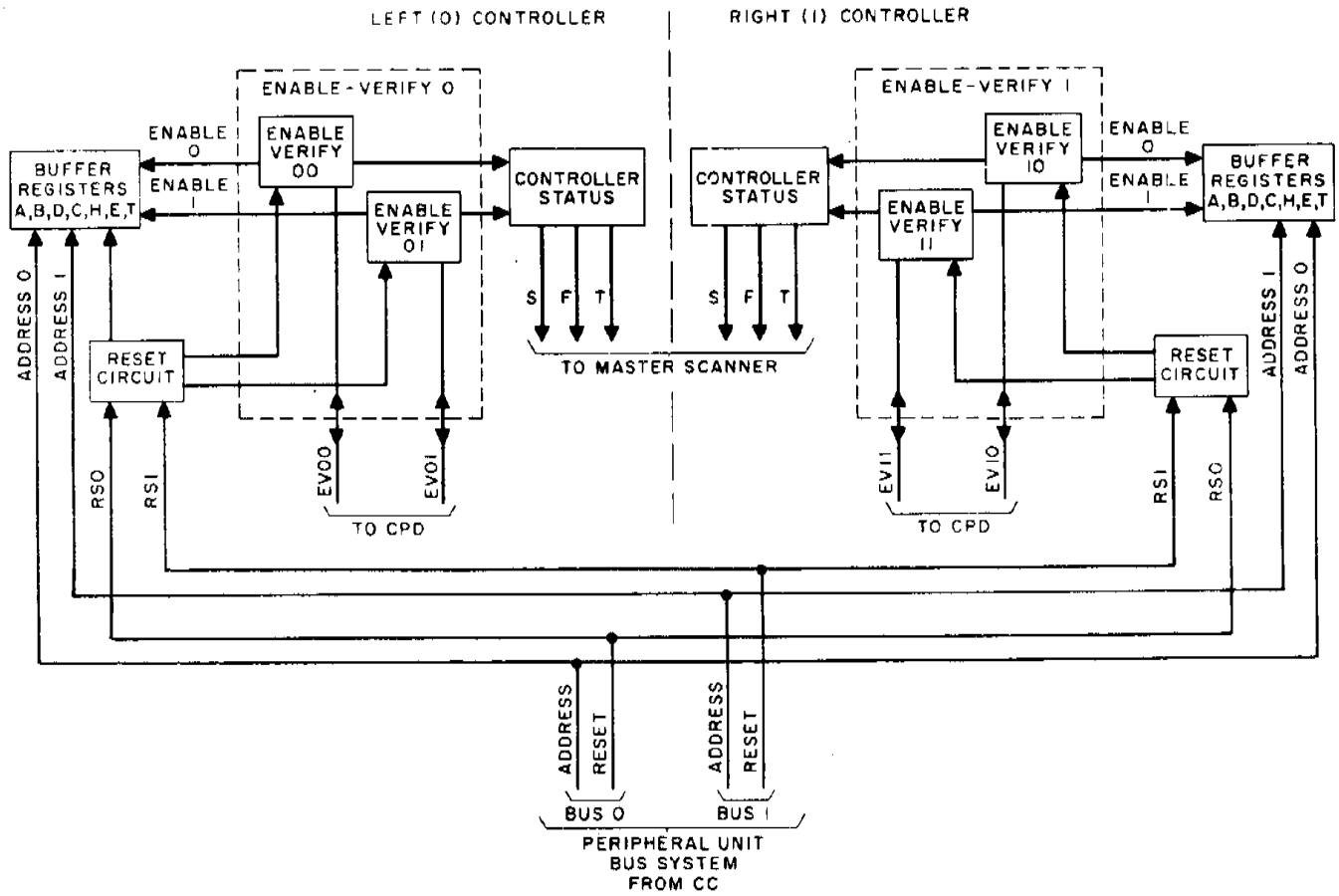

Figure 9-61 Bus Duplication and Reset by Central Control

TCI Library: www.telephonecollectors.info

Note in Figure 9-61 that each bus from CC has one reset lead. Lead RS-0 is activated to reset the buffer register flip-flops and the 00 and 10 enable flip-flops; lead RS-1, to reset the buffer register flip-flops and the 01 and 11 enable flip-flops.

Since there is no controller selection on a reset by CC, the buffer register flip-flops and the enable flip-flops of all controllers are subject to being reset.

F. CONTROLLER STATUS INDICATION

An indication of the status of each controller is available at all times to the CC via the master scanner (MS) (see Figure 9-61).

G. MAINTENANCE MODES OF OPERATION

Maintenance relays are provided to establish modes of operation other than the normal or split mode previously described. These modes are used under trouble conditions and/or to perform maintenance tests.

H. QUARANTINE MODE

In this mode, the operation of quarantine relay LQ or RQ removes a faulty controller from service and gives other controller access to all the magnetically latching relays.

I. RETURN TO SPLIT MODE OF OPERATION

In the split mode no maintenance relays are operated; therefore, to return to this mode some operated maintenance relay must be released. This is accomplished by the momentary operation of relay R28 (or L28). This relay opens the locking path of the other maintenance relays.

J. POWER

An SD is supplied +24 volt and -48 volt power. The +24 volt power for the left side of the SD is fed by the +24-0 bus; for the right side, by the +24-1 bus. The -48 volt power for even-numbered trunk and junctor frames is fed by the -48-0 bus; for the odd-numbered frames, by the -48-1 bus. However, when only one frame of a particular type is provided, both -48 volt buses feed the frame. The buses are branched through twelve fuses at the fuse panel on the frame.

During a manual quarantine, all power is removed from the quarantined side of the SD except for the windings of the A, B and D wirespring relays.

TCI Library: www.telephonecollectors.info

K. EQUIPMENT ARRANGEMENTS

An SD is located below the scanner on bay 1 of each universal trunk frame and junctor frame and a supplementary signal distributor (SSD) when required is mounted on the miscellaneous trunk frame.

9.10 SWITCHING NETWORK

A. GENERAL

The switching network is used to establish 2-wire metallic paths for voice transmission and signaling through eight stages of switching. Beside connecting lines to lines, lines to trunks, and trunks to trunks, the network is used to connect lines or trunks to various types of service circuits such as tones, signal transmitters, signal receivers, coin supervisory circuits, ringing circuits, and maintenance circuits.

Figure 9-62 shows the network as consisting of a number of line link networks (LLN) and trunk link networks (TLN) interconnected through the junctor grouping frame. Each path shown represents two wires, tip and ring. The number of LLN's and TLN's required depends on the traffic characteristics of the office. This number may vary from one to sixteen for each type of link network.

The junctor grouping frame provides the means for terminating the wire junctors used to interconnect the LLN's and TLN's. They also provide the terminations for the junctor circuits used for intraoffice calls through the LLN's. Plug-ended patch cords and connectors are used to interconnect the junctors in a pattern suited to the size and traffic characteristics of the switching network provided.

Line link networks are made up of two types of frames:

(a) Line switch frames (LSF)

(b) Junctor switch frames (JSF).

Trunk link networks are also made up of two types of frames:

(a) Junctor switching frames (JSF)

(b) Trunk switch frames (TSF).

A path through a network is made up of links connected by switches. Each link consists of two wires, tip and ring.

TCI Library: www.telephonecollectors.info

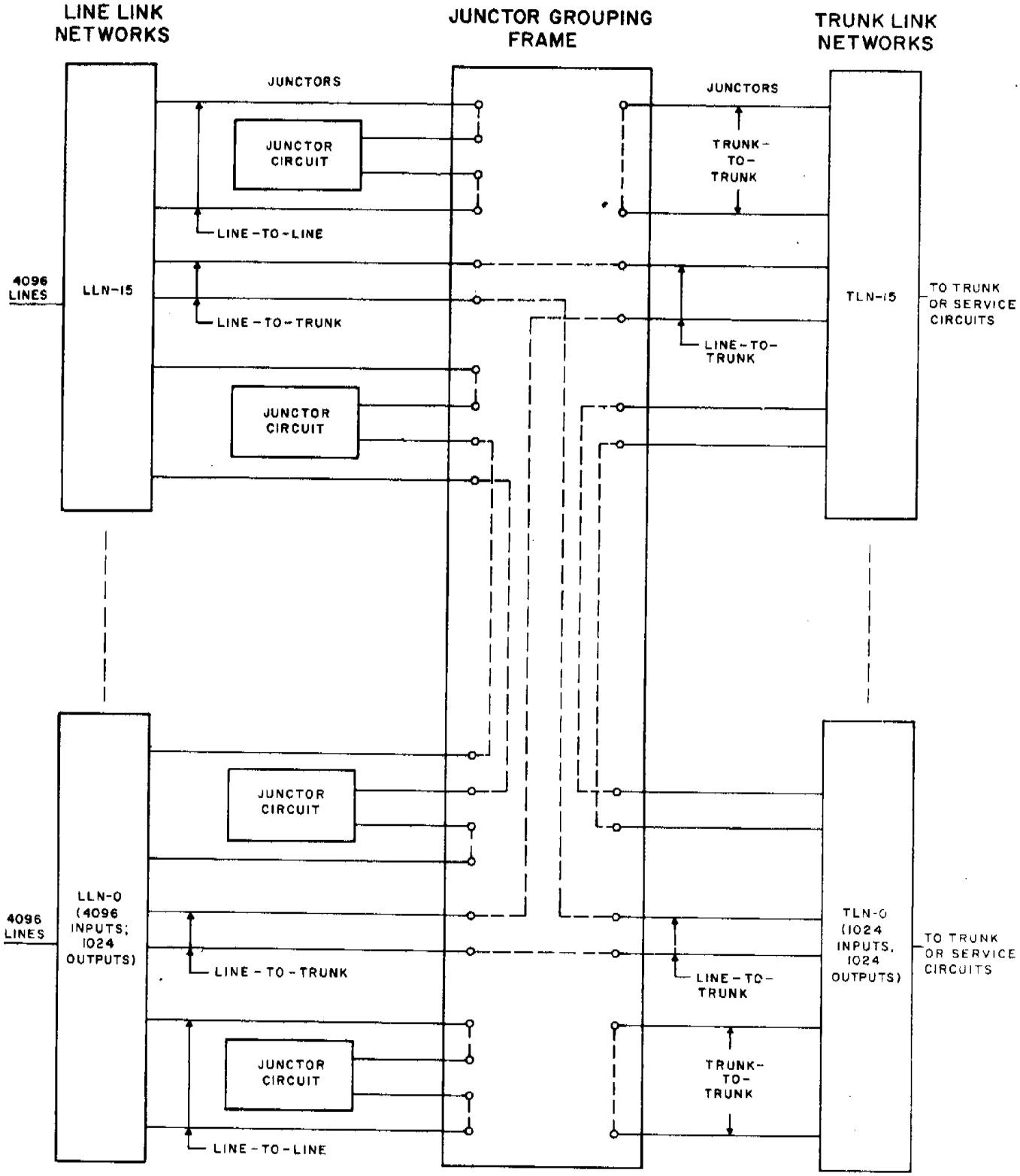

Figure 9-62 Switching Network

TCI Library: www.telephonecollectors.info

B. CROSSPOINT SELECTION

The principle on which crosspoint selection is based is illustrated by Figure 9-63. The control windings of the ferreeds in the switch are shown connected in series along rows and columns. One end of each row and column is connected to a common multiple and wired to wire-spring path select relays, which are controlled by the information from the peripheral bus. Operation of these relays allows a pulse of current to flow only through one row and one column. As a result, the ferreed at the intersection will close its tip and ring contacts. Each of the other ferreeds in the selected row and column has only one winding energized, and consequently, opens the tip and ring contacts.

C. APPARATUS

The basic switching device in the network is called the ferreed. There are two types of ferreeds. One type is used to provide the crosspoint contacts for the four stages of switching in any path through an LLN or a TLN. The other type is used to:

(a) Disconnect a customer line from its scanner ferrod.

(b) Gain access to a test vertical which is connected to FCG, no-test, and restore-verify circuits.

Devices of the first type will be referred to as crosspoint ferreeds or simply ferreeds. Devices of the second type will be referred to as bipolar ferreeds.

1. Crosspoint Ferreed

An exploded view of a crosspoint ferreed is shown in Figure 9-64. The ferreed consists of two miniature glass-enclosed reed switches which are operated or released by controlling the magnetization of the two adjacent remendur plates. (Remendur is a square-loop magnetic material containing iron, cobolt, and vanadium.) The remendur plates are divided magnetically into two independent halves by a steel shunt plate positioned at the midpoint of the tubular coil form. When the two halves of the plates are magnetized series-aiding (adjacent ends poled opposite), part of the magnetic flux returns through the reeds

TCI Library: www.telephonecollectors.info

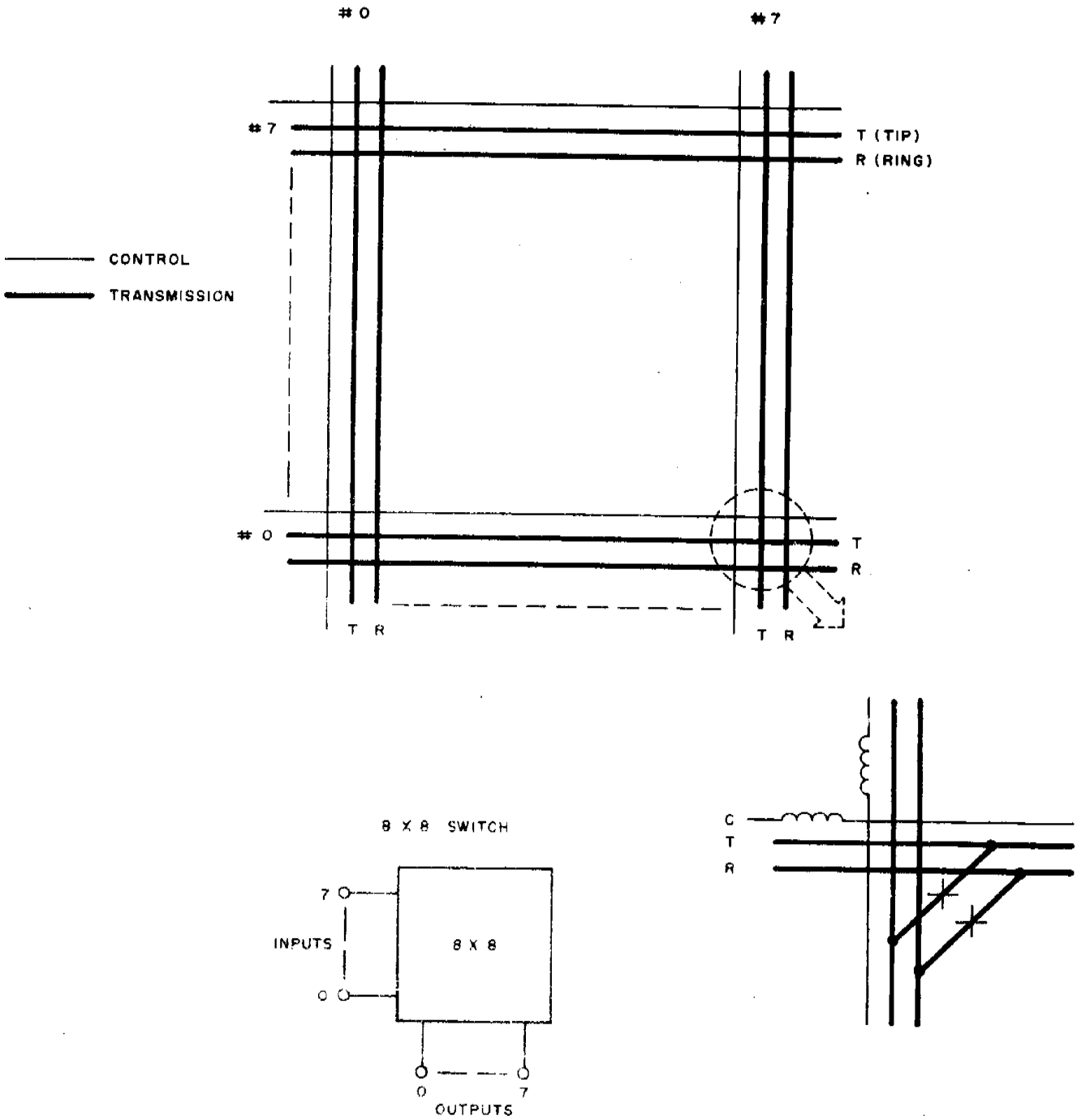

Figure 9-63 Typical Switch and Crosspoint Selection

TCI Library: www.telephonecollectors.info

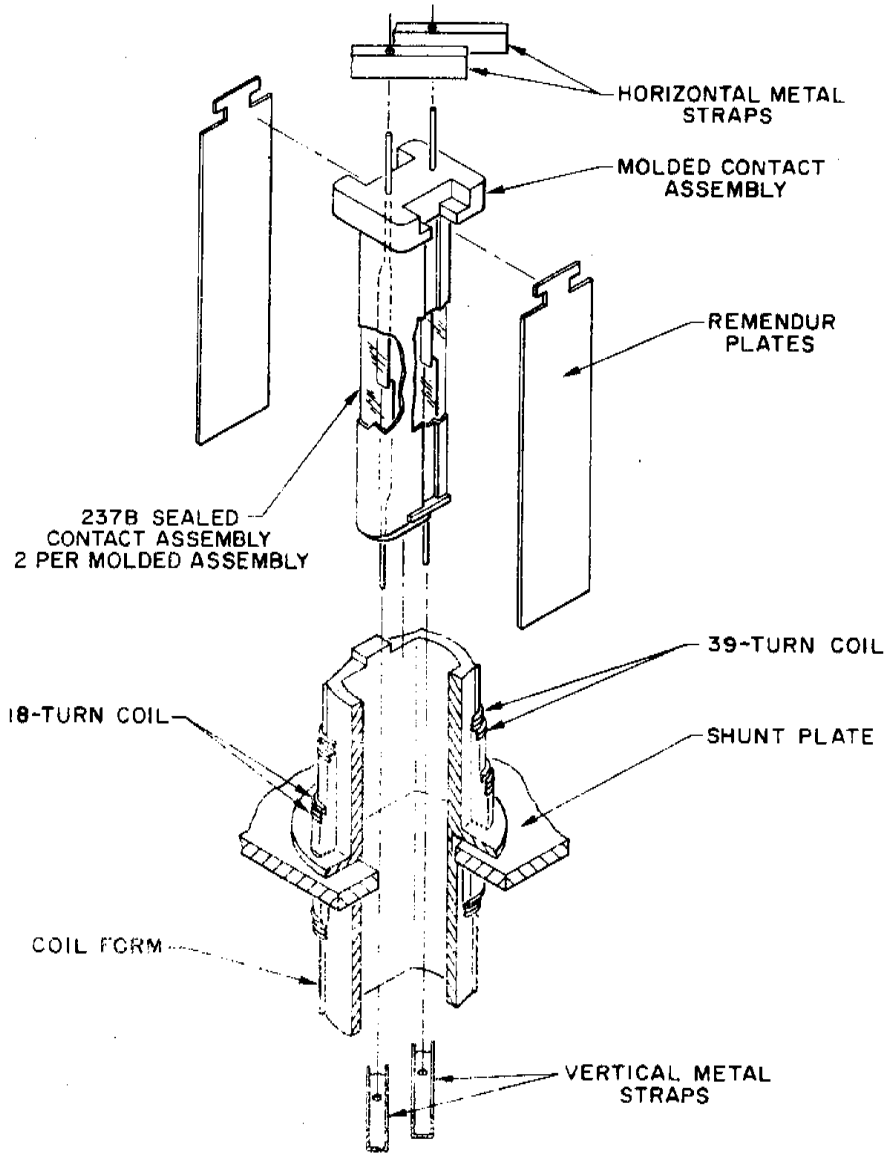

Figure 9-64 Exploded View of Crosspoint Ferreed

TCI Library: www.telephonecollectors.info

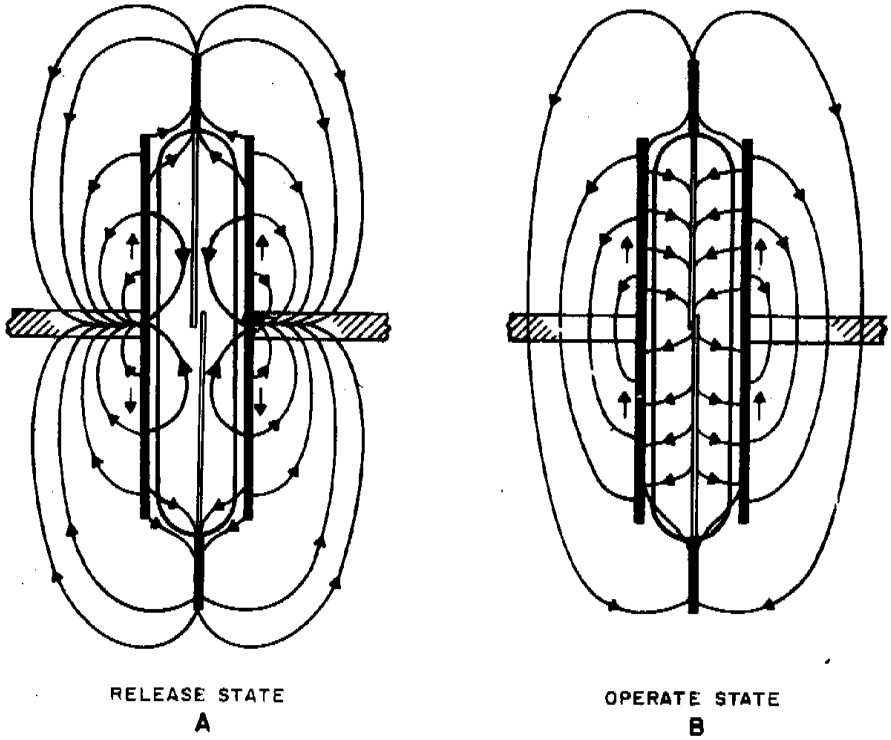

Figure 9-65 Magnetic Flux Patterns in Crosspoint Ferreed

causing contact closure (Figure 9-65B). When the two halves are magnetized in series-opposition (adjacent ends poled alike), there is very little flux through the reeds and their normal tension opens the contacts (Figure 9-65A).

When only one winding is energized, the two halves of the plates are magnetized in series-opposition and the contacts are opened. When both windings are energized simultaneously with equal currents, the two halves of the plates are magnetized series-aiding, causing the contacts to close. The contacts are "dry" when switched; that is, no battery voltage is applied.

When a 0.3-msec pulse of nine to thirteen amperes is applied simultaneously to both windings of the ferreed element, the reed contacts will close within 3 msec. The remendur plates retain their magnetic polarity after the pulse current stops; this keeps the contacts closed.

TCI Library: www.telephonecollectors.info

2. Bipolar Ferreed

The permanent magnet of cunife material has a coercive force of 500 oersteds. The semipermanent magnet of remendur has a coercive force of 50 oersteds. When the winding is pulsed in one direction, the reed contacts are closed (Figure 9-66A). When the winding is pulsed in the opposite direction, the reed contacts are opened (Figure 9-66B). In the latter case, the reeds are bypassed by the magnetic flux and their normal tension causes the contacts to open. When the current in either direction is removed, the semipermanent magnet retains the resulting magnetization and the contacts remain operated or released.

Bipolar ferreeds are arranged in 1 x 8 switch assembles

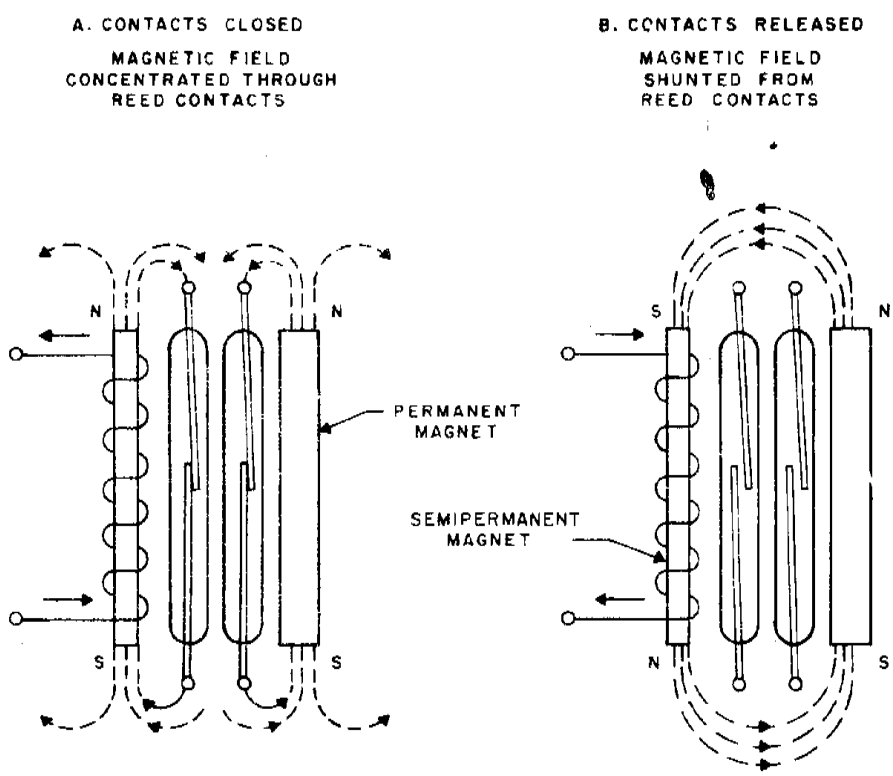

Figure 9-66 Flux Patterns in Bipolar Ferreed

TCI Library: www.telephonecollectors.info

D. NETWORK SWITCHES

A basic switch assembly contains 64 ferreeds arranged in a square array of eight columns and eight rows.

The reed switches are soldered to horizontal straps on one side and to vertical straps on the other side. These horizontal and vertical multiples, when connected by reed contacts, form the tip and ring paths through the switch.

Electrically, there are four types of switches which differ in the arrangement of the tip and ring strapping. These four types are schematically described in Figure 9-67.

E. NETWORK ORGANIZATION

The organization of LLN's and TLN's will be considered in terms of frames and switches within the frames.

1. 2 to 1 Line Link Network

A line network (LLN) has four line switch frames designed for a 2 to 1 concentration ratio and four junctor switch frames.

Each line switch frame contains 16 concentrators. Each concentrator, in turn, has two switches in stage 0 and two in stage 1. Each switch in stage 0 is electrically equivalent to four 4 by 4 switches. Each switch in stage 1 is electrically equivalent to two 8 by 4 switches.

Concentration ratios of 2.5 to 1, 3 to 1, 3.5 to 1, and 4 to 1 are achieved by using four junctor switch frames with five, six, seven, or eight line switch frames of the 2-to-1 design and by multiplying the B-links (see Table 9-3). There are two designs of line switch frames: one for 4-to-1 concentration ratio, one for 2-to-1. It should be noted, however, that a particular office uses only one type of line switch frame and that all line link networks have the same concentration ratio.

2. 4 to 1 Line Link Network

There are four basic line switch frames (BLSF), four supplementary line switch frames (SLSF), and four junctor switch frames (JSF). An LLN may be partially equipped with line and junctor switch frames.

TCI Library: www.telephonecollectors.info

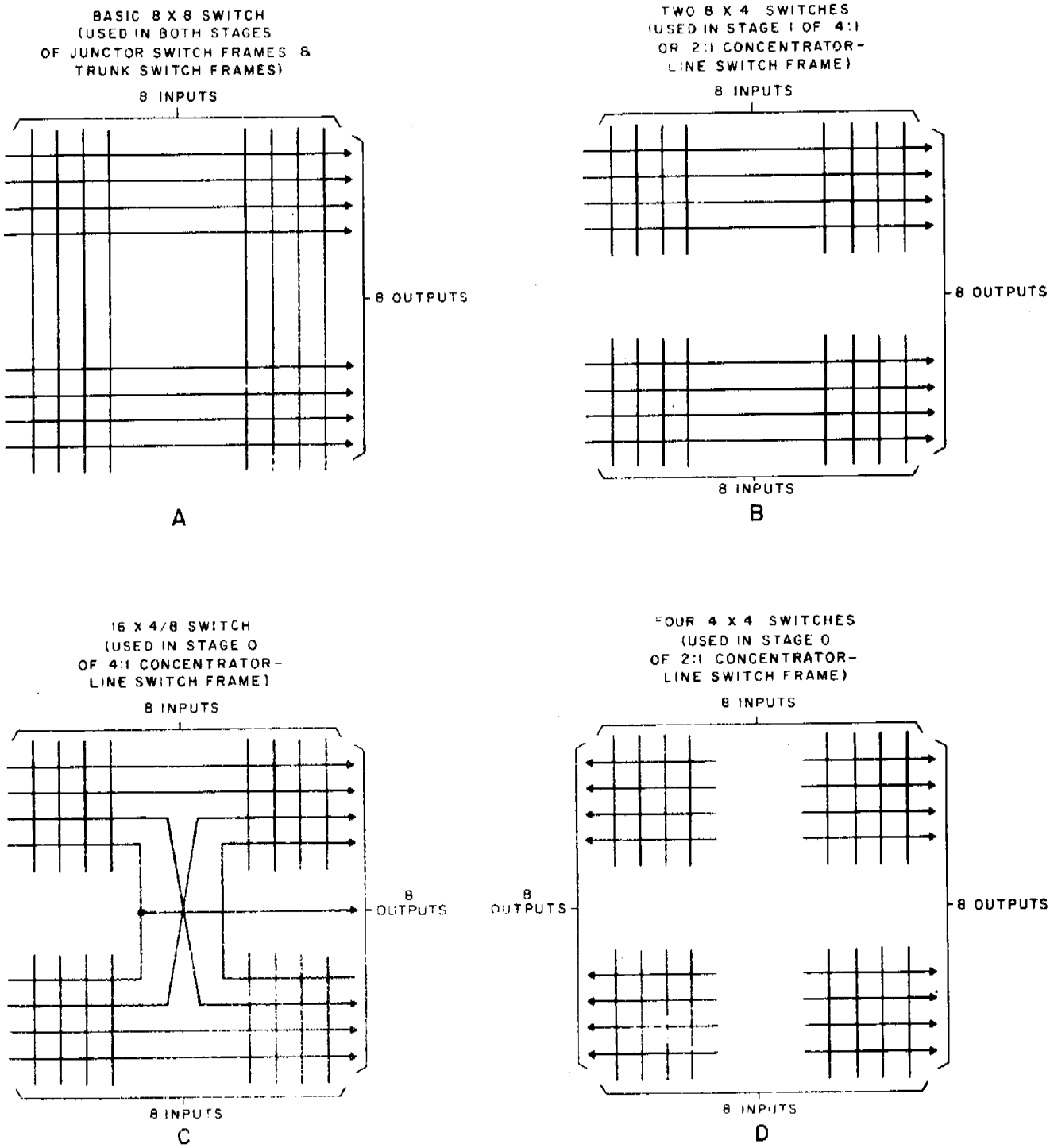

Figure 9-67 Tip and Ring Wiring Schematic for Four Types of Network Switches

TCI Library: www.telephonecollectors.info

Each line switch frame, whether basic or supplementary, contains eight concentrators. Each concentrator has four switches in stage 0; each of the 16 inputs of a switch has access to only four of the eight outputs. For each of the four switches in stage 0, there are two switches that provide 16 pairs of cutoff contacts. Stage 1 of a concentrator has two switches, each electrically equivalent to two 8 by 4 switches.

Each junctor switch frame contains four grids. Each grid has eight 8 by 8 switches in each of the two stages. In addition, a 1 by 8 switch is associated with each switch in stage 1. The 1 by 8 switch provides access to a common test vertical which is connected to FCG, no-test, and restore verify circuits.

Concentration ratios of 5 to 1, 6 to 1, 7 to 1, or 8 to 1 are achieved by using four junctor switch frames with five, six, seven, or eight basic and supplementary line switch frames, respectively, and by multiplying the B-links to the added line switch frames (see Table 9-3).

F. NETWORK PATHS

A network path is formed by a combination of links and junctors joined into a chain by the closure of the appropriate crosspoint contacts. Figure 9-68 shows, as an example, an intraoffice talking path. While a line is idle, its associated crosspoint contacts in stage 0 of the LSF are open. At the same time, its cutoff contacts are closed, thus connecting the line to its scanner for supervision. When a path is to be established through the LLN, a partial path is set up first by contacts in stage 1 of the LSF and in stages 0 and 1 of the appropriate JSF. By means of contacts in the same JSF, an FCG[1] (false cross and ground) detector is then connected to check the path. Next, the appropriate crosspoint contacts in stage 0 of the LSF are closed, while the cutoff contacts in the LSF and the F contacts in the JSF are opened. The preceding considerations apply to the paths associated with both the calling and the called lines. Finally, cut-through contacts in a junctor circuit are closed to establish a talking connection.

TCI Library: www.telephonecollectors.info

TABLE 9-3

LINE LINK NETWORK SIZES

LSF Conc Ration	LSF's Per LLN	Ratio of Lines to Junctors	Customer Lines Per LLN	Max. No. of LLN's Per Office	Max. No. of Lines Per Office
		For Heavy Customer Usage			
2 to 1	4	2.0 to 1	2,048	16	32,768
2 to 1	5	2.5 to 1	2,560	16	40,960
2 to 1	6	3.0 to 1	3,072	16	49,152
2 to 1	7	3.5 to 1	3,584	16	57,340
2 to 1	8	4.0 to 1	4,096	16	65,536
		For Regular Customer Usage*			
4 to 1	4	4 to 1	4,096	16	65,536
4 to 1	5	5 to 1	5,120	14	65,536
4 to 1	6	6 to 1	6,144	12	65,536
4 to 1	7	7 to 1	7,168	10	65,536
4 to 1	8	8 to 1	8,192	8	65,536

*LSFs for a 4-to-1 concentration ratio are made up of one basic and one supplementary frame.

TABLE 9-4

TRUNK LINK NETWORK SIZES

Ratio of Trunks to Junctors	TSF's Per TLN	Trunk Term. Per TLN	Junctors Per TLN	JSF's Per TLN
1.00 to 1	4	1,024	1,024	4
1.25 to 1	5	1,280	1,024	4
1.50 to 1	6	1,536	1,024	4
1.75 to 1	7	1,792	1,024	4
2.00 to 1	8	2,048	1,024	4

TCI Library: www.telephonecollectors.info

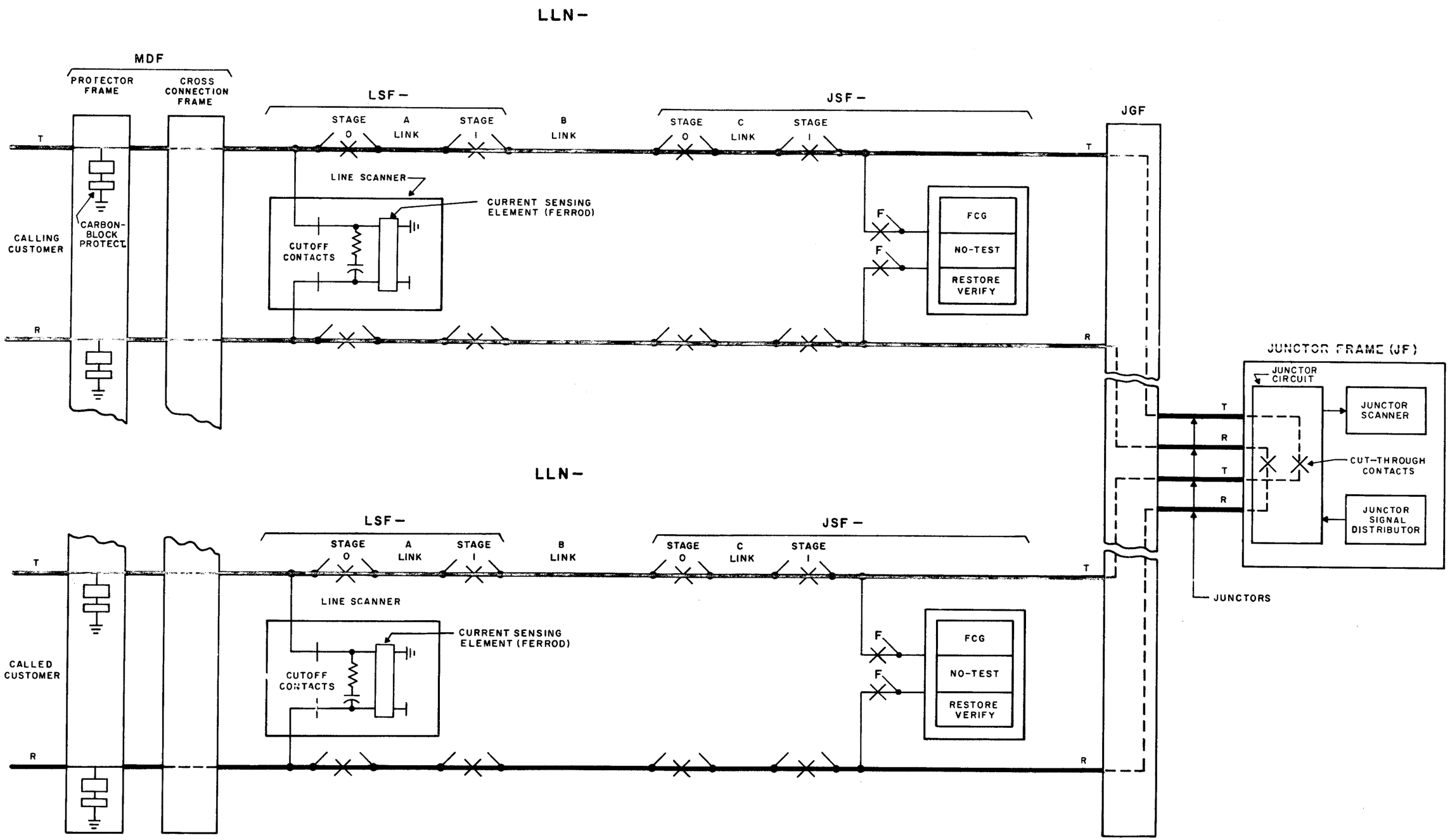

Figure 9-68 Intraoffice Talking Path

TCI Library: www.telephonecollectors.info

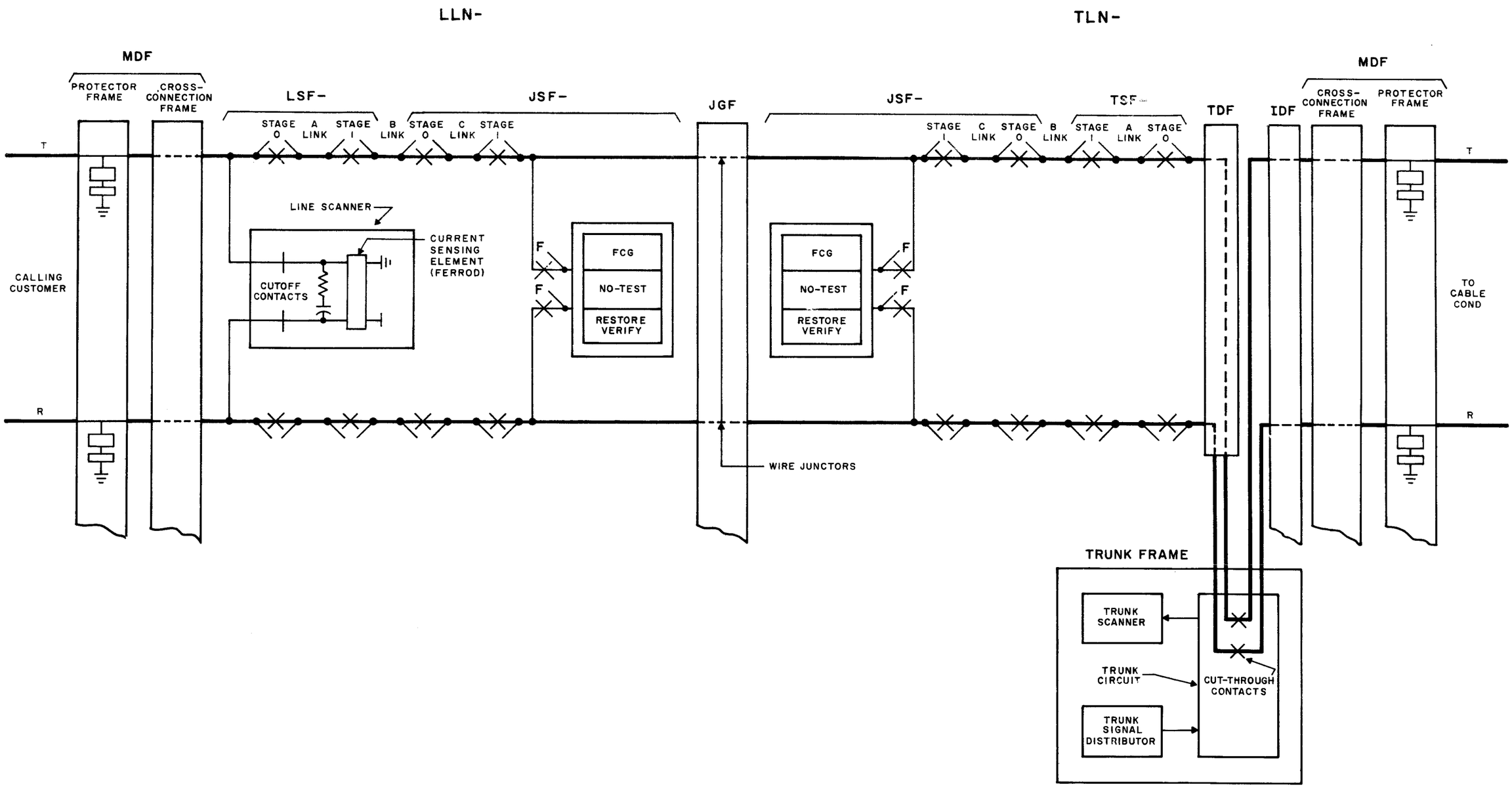

Figure 9-69 Interoffice Talking Path

TCI Library: www.telephonecollectors.info

At any time during the conversation, it is possible to monitor the call by closing the F contacts in the JSF and by connecting the no-test circuit. At the end of the conversation, the connection is released by opening the cut-through contacts in the junctor circuit. While the LLN paths for the calling and called lines are still closed, the system closes, for each line, the cutoff contacts in LSF and the F contacts in the JSF and connects the restore verify circuit. This puts a resistor across the tip and ring and simulates an origination which is observed via the line scanner. Having verified its ability to detect any subsequent originations on the line, the system opens the crosspoint contacts in stage 0 of the LSF. Figure 9-69 shows an interoffice talking path.

(1) FCG test consists of monitoring for current in a loop that contains the tip and ring conductors of the test vertical. A sensitive type of ferrod is used as a current sensing device.

G. CONTROL

Each switch frame in the network contains two controllers. The switches within a frame are divided into two equal groups, each assigned to a controller. Under normal conditions, each controller operates with its assigned switch group. Two simultaneous path selections at most can be made within a frame, one in each switch group. However, when a controller is in trouble, its mate takes over the control of both switch groups. Under these conditions, only one path selection can take place at a time within a frame.

The selection of crosspoints to set up a path in the network is a function of central control (CC). In its call store (CS), CC maintains an up-to-date record of the busy-idle states of all the network links (network map); it also maintains a record of the end terminals of all paths in use or reserved in the network (path memory). When a selection is to be made between a line and a junctor or a trunk and a junctor, the network map is examined. A path is then chosen on the basis of the busy-idle states of all the possible A-, B-, and C-links between the line (or trunk) and a selected junctor group. After a path is chosen, the network map is brought up to date and a record of the line-junctor-trunk association is entered in the path memory. Appropriate network instructions are then prepared by CC. These instructions and the identity of the network frames to which they pertain are recorded in the CS in one of a number of

TCI Library: www.telephonecollectors.info

peripheral order buffers (POB) (also called work lists). There is a work list associated with each call requiring a network connection. At intervals of 25 msec, instructions are read out of the work lists, one at a time, and transmitted to the appropriate network controllers. The network controllers cause the appropriate crosspoint contacts to close.

The path selection within a network frame is controlled by wirespring relays in the network controllers. The operation of a particular set of wirespring relays determines the crosspoint control windings to be pulsed. This results in the closure of those crosspoint contacts whose horizontal and vertical control windings are simultaneously pulsed.

1. Network Controllers

Figure 9-70A shows the basic arrangement of a typical network controller.

The controller is enabled via the central pulse distributor (CPD). Via one of the duplicate peripheral address buses, the enabled controller receives an instruction from CC and stores it in the buffer register. Figure 9-70B shows the make-up of the order data and link data for the 4 to 1 line switch frames. The order data consists of six bits in a one-out-of-two (1/2) and a one-out-of-four (1/4) code. This information is used by the translator to operate one of the six order relays. Similarly, the link data is used to operate one relay in each of the A, B, C and D groups and to select between the basic and supplementary frames.

Three test circuits are provided within each controller to monitor its operation. These circuits will prevent the controller from processing an order if an invalid address or a malfunction is detected. In such a case, the controller will remain in the state it was in at the time the malfunction was detected. Before the controller can be reenabled, it will be necessary to send a signal over the reset lead of the peripheral bus. The test circuits operate as follows:

(a) A group check circuit verifies that only one relay has been operated among the order relays and in each access relay group.

TCI Library: www.telephonecollectors.info

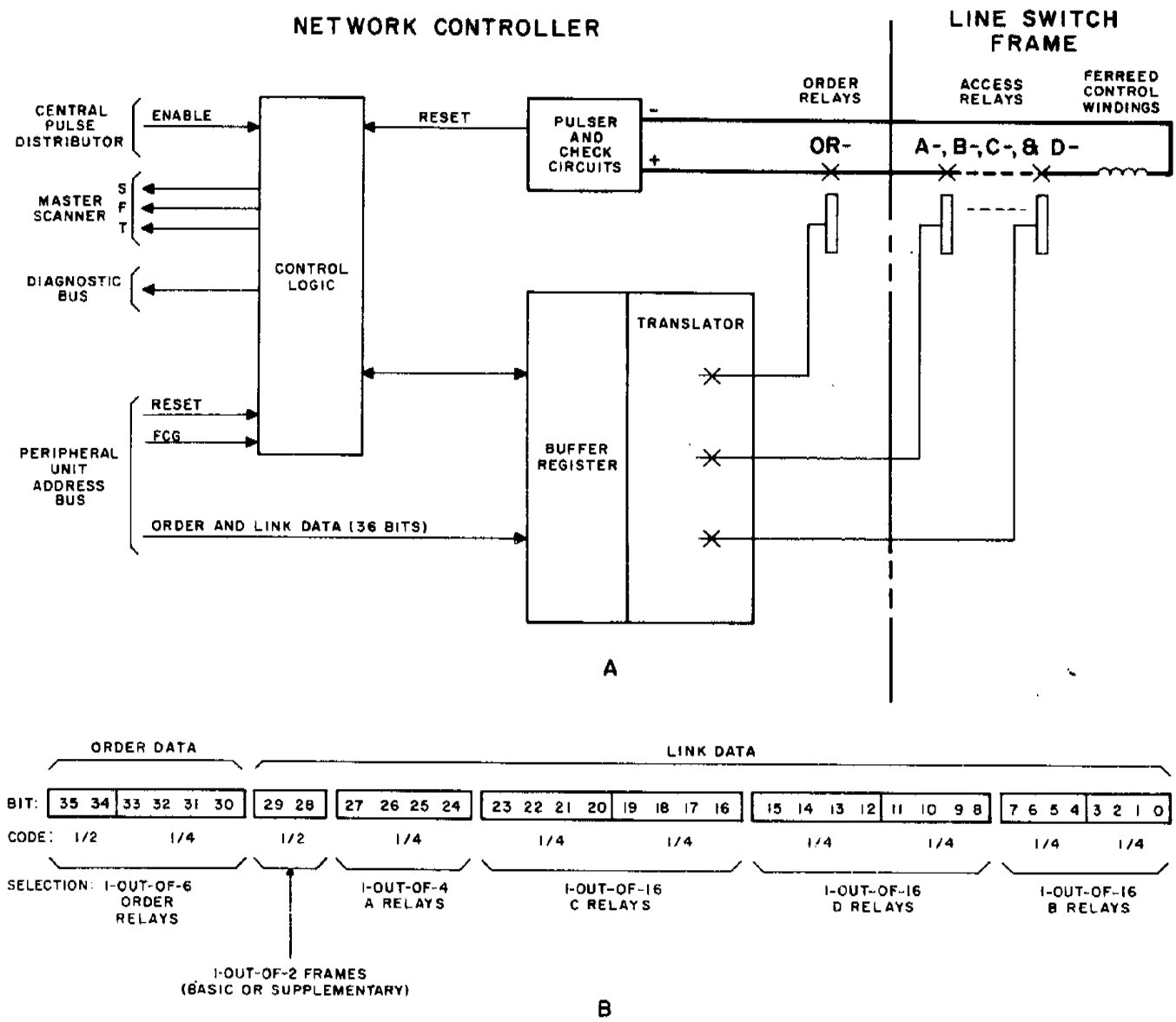

Figure 9-70 Pulse Path Selection to Ferreed Windings

(b) A path check circuit prevents the pulses from being fired unless the pulsing path is continuous.

(c) A pulse verification circuit resets the controller to the idle state only if the pulser has generated a current pulse of sufficient amplitude to operate the ferreeds.

TCI Library: www.telephonecollectors.info

Twelve internal test points are provided to enable the system to test and diagnose a controller. Some of these points, for instance, can indicate whether all relays are released in each of the various access relay groups. The twelve test points can be connected to a diagnostic bus which is common to all network controllers. This bus, which is not duplicated, can be observed via the master scanner (MS). In addition, there are three scanpoints per controller permanently connected to the MS; these points, labeled, S, F and T, are used to observe the various internal states of the controller.

2. Duplication

As previously stated, each switch frame has two controllers, each assigned to one half of the switches on the frame. Figure 9-71 shows schematically how each controller can operate independently of the other under normal conditions and can take over the entire frame when the mate controller fails. Each controller has its own group of order relays and path selection relays. Each of these relays has two windings. In an order relay, either of the two windings can be controlled by the same controller. In a path selection relay, one winding can be controlled by one controller, the other by the mate controller. The pulser of either controller can be used to operate the ferreeds in either switch group of a frame.

3. Modes of Operation

The following modes of operation are available for a network controller:

(a) Normal mode of operation (NM)

(b) Test point access mode (TPAM)

(c) Quarantine mode (QM)

(d) Manual power removed mode (MPRM)

(e) Combined mode (CM).

TCI Library: www.telephonecollectors.info

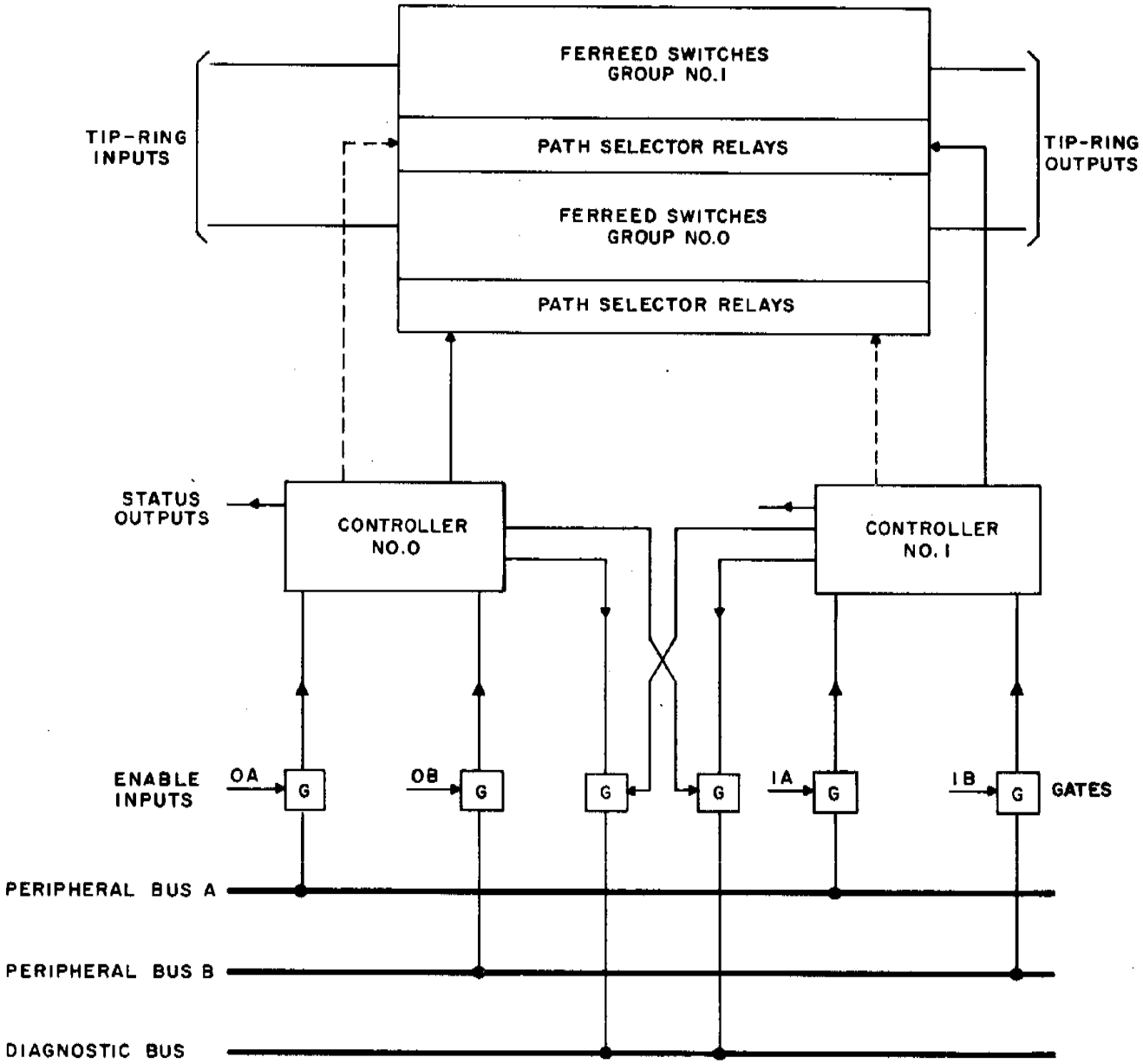

Figure 9-71 Frame Control

TCI Library: www.telephonecollectors.info

In the NM, each of the two controllers on a frame is active and controls its half of the frame. If, while the NM, a controller receives an order to operate the equipment in the other half of the frame, the order will be regarded as invalid and the operation will be inhibited by the internal test circuits.

In the TPAM, a relay connects the twelve test points of a controller to the diagnostic bus. Only one controller should be associated with the diagnostic bus at any time.

The QM is used to remove a controller from service when a trouble is detected. In this mode, the controller is prevented from operating any path selection relays and will not return an enable verify signal. A controller in QM can still receive enable signals and signals from the peripheral bus system. It can also carry out orders up to the point where the wire-spring relays would normally be operated. This makes possible a partial diagnosis of the equipment. The internal test circuits can be exercised and monitored by the system.

In the MPRM, all power is removed from a controller. This mode is initiated manually at the frame. Power may be removed from only one of the two controllers at a time.

A controller is automatically placed in the CM whenever its mate controller is either in QM or in MPRM. In this mode, the controller assumes control of all the common equipment in the frame.

4. Mode Control

All modes of operation are controlled by the system except for MPRM, which is initiated manually. To place a controller in either the TPAM or QM, a "Test" order is sent to the mate controller with link data specifying TPAM or QM. A controller may be placed in both TPAM and QM by means of two separate orders. To release a controller from TPAM or QM, a "Test" order may be sent to the controller with link data specifying release. Restoring power to a controller after an MPRM can only be done manually.

TCI Library: www.telephonecollectors.info

H. NETWORK ORDERS

As previously shown, each line, junctor, or trunk switch frame provides two stages of switching. In addition, line switch frames contain bipolar ferreeds for line scanner cutoff; junctor switch frames contain bipolar ferreeds for access to a test vertical. The function of the CC is to determine, under program control, the complete network path required for a particular phase in the processing of a call. The information for establishing the selected path is then sent to the appropriate switch frames. One at a time, these frames receive the necessary information from CC via the peripheral bus. This information consists mainly of:

(a) An order specifying the type of action to be carried out.

(b) An address specifying the links to be selected.

Figure 9-72 describes the types of orders that can be carried out by the various switch frames. For instance, the top item of Figure 9-72B shows that, as the result of the order "Connect (with FCG)," the controller of an LSF opens stage 0 of some specified path, closes stage 1, and leaves the associated cutoff contacts unchanged (closed). At the same time, a line junctor switch frame executes a similar order (see top item of Figure 9-72C). The combined actions of the LSF and JSF establish a partial path that involves three stages of switching and is connected to an FCG detector.

Later, the LSF will execute the order "Connect (with CO open)" while the JSF executes the order "Connect." This establishes a normal 4-stage path without any connections to either a line scanner or a test vertical.

To monitor an established connection, the order "Operate No-Test" is sent to the JSF; this connects the path to a no-test termination via the test vertical. Later, the order "Restore No-Test" will remove this connection.

As previously explained, when a path through the LLN is to be released, it is necessary to check the ability of the system to supervise the line involved. This is done by sending the order "Connect (with CO closed)" to the LSF and the order "Connect verify (loop start)" or "Connect verify (ground start)" to the JSF. As the restore verify circuit connected to the test vertical, a resistor is connected

TCI Library: www.telephonecollectors.info

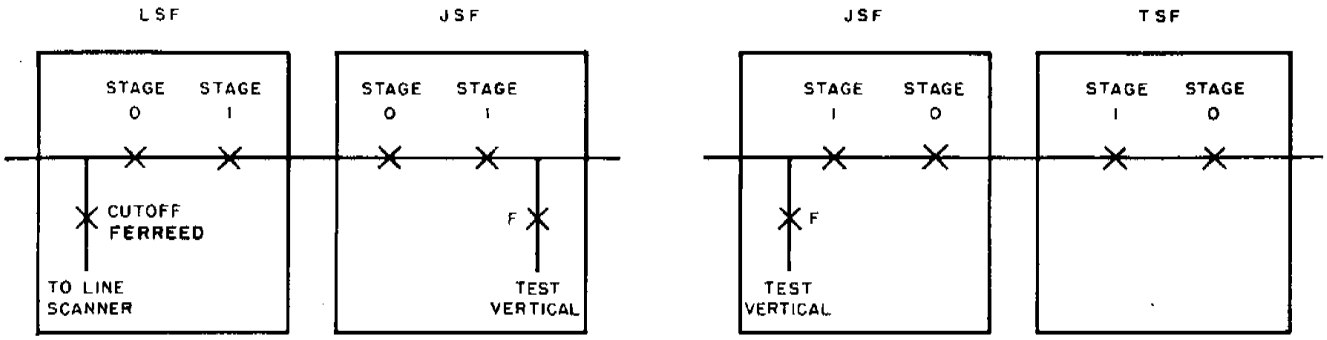

A

LSF ORDERS

ORDER	CUTOFF	STAGE 0	STAGE 1
CONNECT (WITH FCG)	N	O	C
CONNECT (WITH CUTOFF OPEN)	O	C	C
CONNECT (WITH CUTOFF CLOSED)	C	C	C
RESTORE CUTOFF	C	O	N
HIGH & DRY	O	O	N
TEST	N	N	N

O = OPEN
C = CLOSED
N = NO CHANGE

B

JSF ORDERS

ORDER	STAGE 0	STAGE 1	F	CIRCUIT CONNECTED TO TEST VERTICAL
CONNECT (WITH FCG)	C	C	C	FCG
CONNECT	C	C	O	—
OPERATE NO-TEST	N	N	C	NO-TEST
REMOVE NO-TEST	N	N	O	—
CONNECT VERIFY (LOOP START)	C	C	C	LOOP START TERMINATION
CONNECT VERIFY (GROUND START)	C	C	C	GROUND START TERMINATION
TEST	N	N	N	—

C

TSF ORDERS

ORDER	STAGE 1	STAGE 0
CONNECT	C	C
TEST	N	N

D

Figure 9-72 Network Orders

TCI Library: www.telephonecollectors.info

between tip and ring for a loop start and between ring and ground for a ground start. Later, the LSF will be requested to execute the order "Connect (with FCG)." If the restore verify circuit is not available, the path is released directly by means of the order "Restore Cutoff."

The "high and dry" order to an LSF is used whenever it is desired to isolate a line from the system because of service denial or trouble on the line.

The "test" order to a switch frame is used to control the mode of operation of a controller and does not affect any crosspoints.

It should be noted that none of the network orders requests the opening of any crosspoint contacts in stage 1 of an LSF or stages 0 and 1 of either a JSF or a TSF. These contacts will be opened in the process of establishing new paths. Further illustrations of the network orders described above are shown schematically for the LSF, JSF and TSF in Figure 9-73 through 9-75.

I. JUNCTOR GROUPING FRAME

The junctor grouping frame (JGF) provides the means for interconnecting the LLN's, TLN's and the junctor frames (JF). The junctor pattern for a particular office depends on its size and on the type of traffic.

The junctors from the LLN's, TLN's, or JF's are arranged in subgroups of 16 tip and ring pairs. Via terminal strips on the rear of the JGF, the 16 pairs of a subgroup are connected either to a connector or to a plug-ended path cord on the front.

All offices have at least two JGF bays (Figure 9-76), each bay consists of eight horizontal sections. Each section has 18 connectors in two rows of 9, 18 patch cords - each connected to a plug, and a shelf for storing the excess slack of the cords.

The connectors and plug-ended patch cords in the eight horizontal sections form nine vertical files on the bay. Each file has 16 plugs and 16 connectors and thus a capacity for 32 by 16 or 512 junctors; the total capacity of a bay is then 9 by 512 or 4,608 junctors. The 1,024 junctors from each LLN or TLN are distributed over two files on separate bays. The 1,024 junctors from two JF's are distributed over two files; half of the 512 junctors from each JF goes to each file.

TCI Library: www.telephonecollectors.info

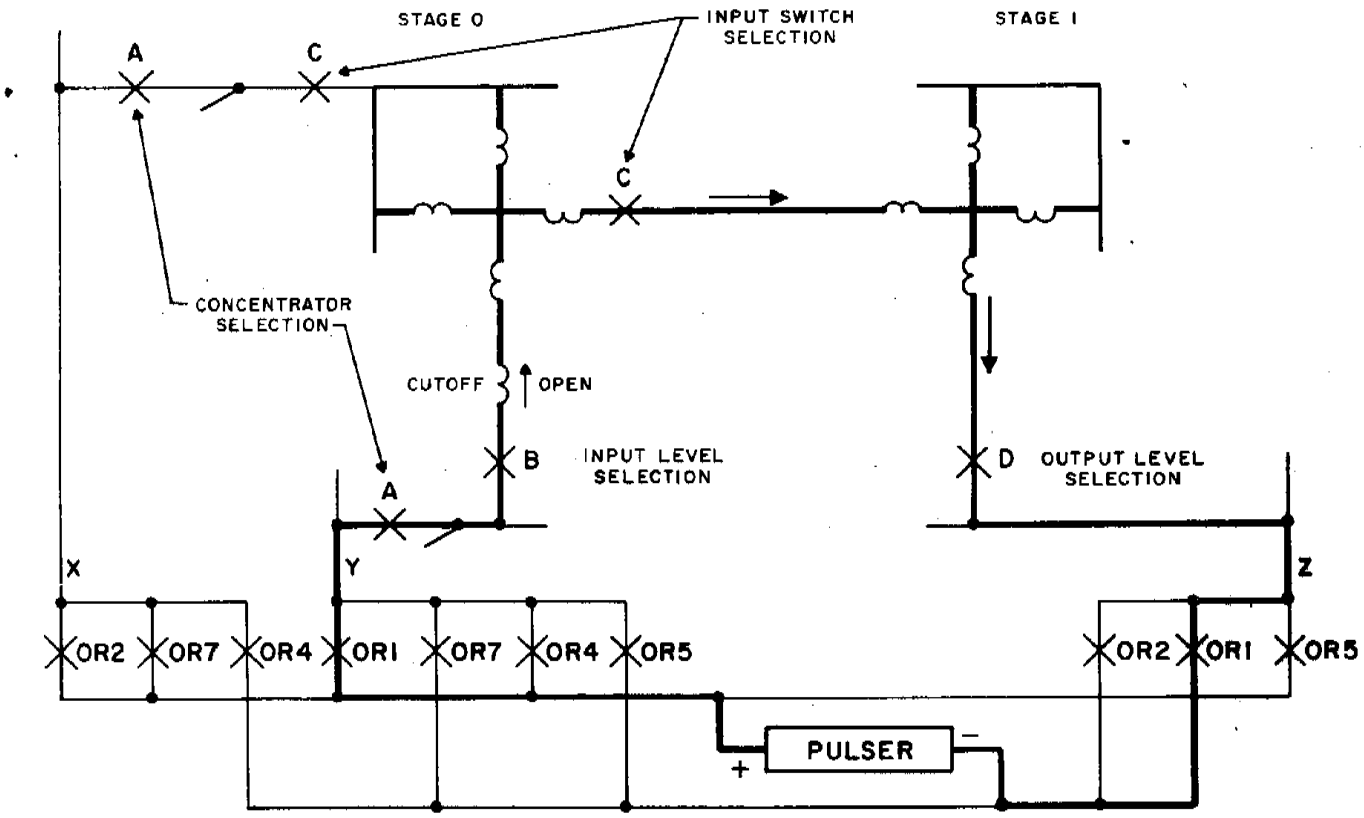

TYPICAL FRAME ORDERS AND PATH SELECTIONS IN A LINE SWITCH FRAME

NETWORK OPERATION	ORDER RELAY	FERREED OPERATIONS IN TIP-RING PATH			PULSER CONNECTION	
		CUTOFF	STAGE 0	STAGE I	+	−
CONNECT CUTOFF OPEN	OR1	O	C	C	Y	Z
FCG	OR2	N	O	C	X	Z
HIGH AND DRY	OR4	O	O	N	Y	X
CONNECT CUTOFF CLOSED	OR5	C	C	C	Z	Y
RESTORE CUTOFF	OR7	C	O	N	X	Y

O - OPEN
C - CLOSED
N - NO CHANGE

Figure 9-73 Pulse Path for "Connect (with C0 Open)"

TCI Library: www.telephonecollectors.info

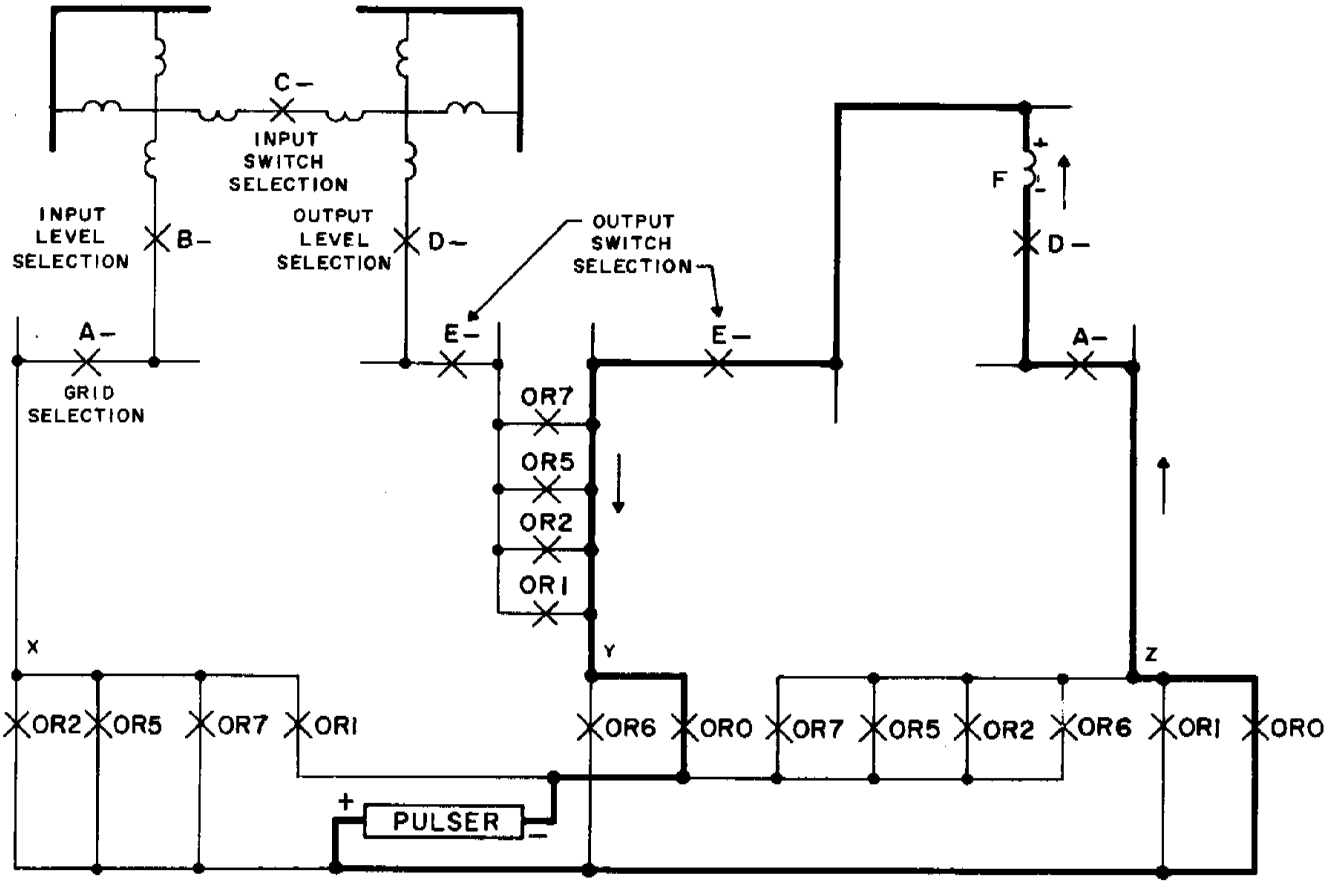

TYPICAL FRAME ORDERS AND PATH SELECTIONS IN JUNCTOR SWITCH FRAME

NETWORK OPERATION	ORDER RELAY	FERREED OPERATIONS IN TIP-RING PATH			PULSER CONNECTION	
		F	STAGE 0	STAGE 1	+	–
REMOVE NT, FCG, OR VERIFY	OR0	O	N	N	Z	Y
CONNECT	OR1	O	C	C	Z	X
FCG	OR2	C	C	C	X	Z
CONNECT VERIFY (LOOP ST.)	OR5	C	C	C	X	Z
OPERATE NT	OR6	C	N	N	Y	Z
CONNECT VERIFY (GRD ST.)	OR7	C	C	C	X	Z

O = OPEN
C = CLOSED
N = NO CHANGE

Figure 9-74 JSF - Simplified Pulse Path

TCI Library: www.telephonecollectors.info

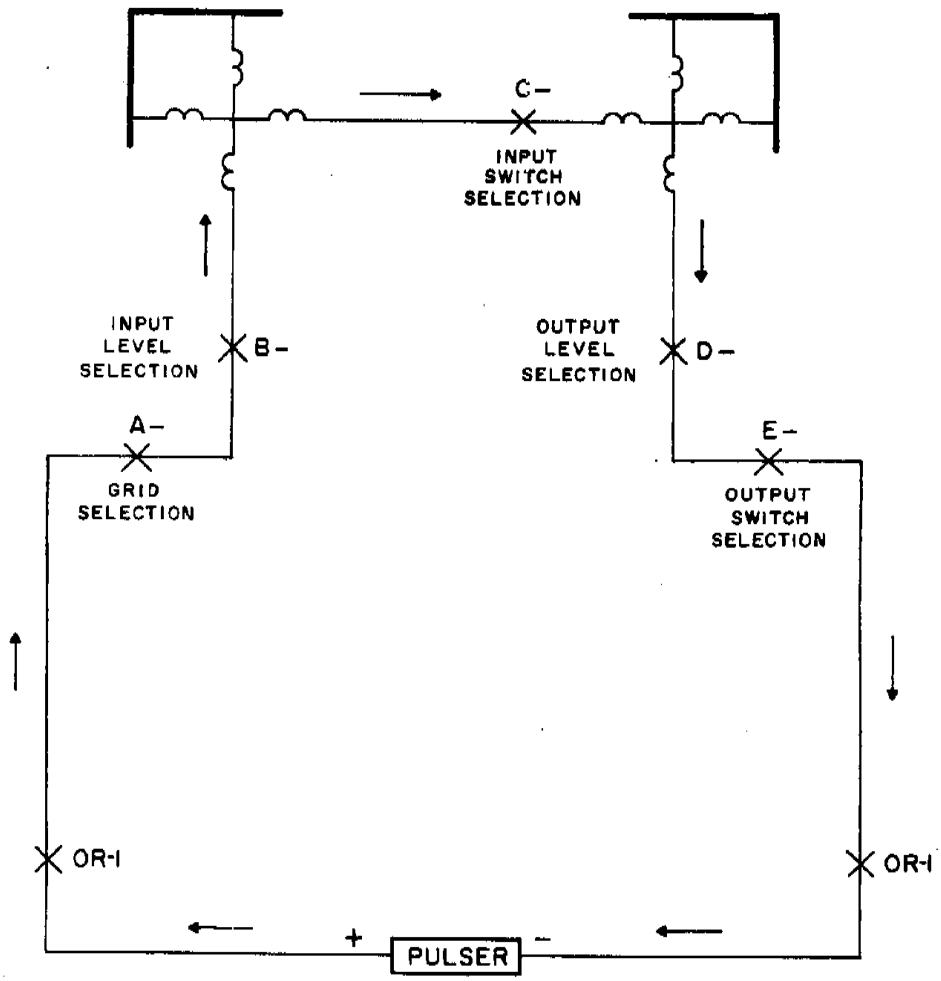

Figure 9-75 TSF - Connect Pulse Path

For a fully equipped LLN or TLN, either a plug or a connector is used to terminate the 16 junctors that have the same switch number and the same switch level number. For instance, a plug is used to terminate the 16 junctors that come from level 2 of the 16 No. 6 switches that exist in the 16 grids of the four junctor switch frames in the LLN or TLN. Since there are eight switches in stage 1 of a grid and eight levels in each switch, there are 64 groups of 16 junctors. Of these 32 go to one JGF bay, 32 to the other. Of the 32 going to each JGF, 16 are terminated on plugs and 16 on jacks. Terminating one half of the junctors in a vertical file on plugs and one half on connectors provides the flexibility needed to interconnect the frames within the switching network.

TCI Library: www.telephonecollectors.info

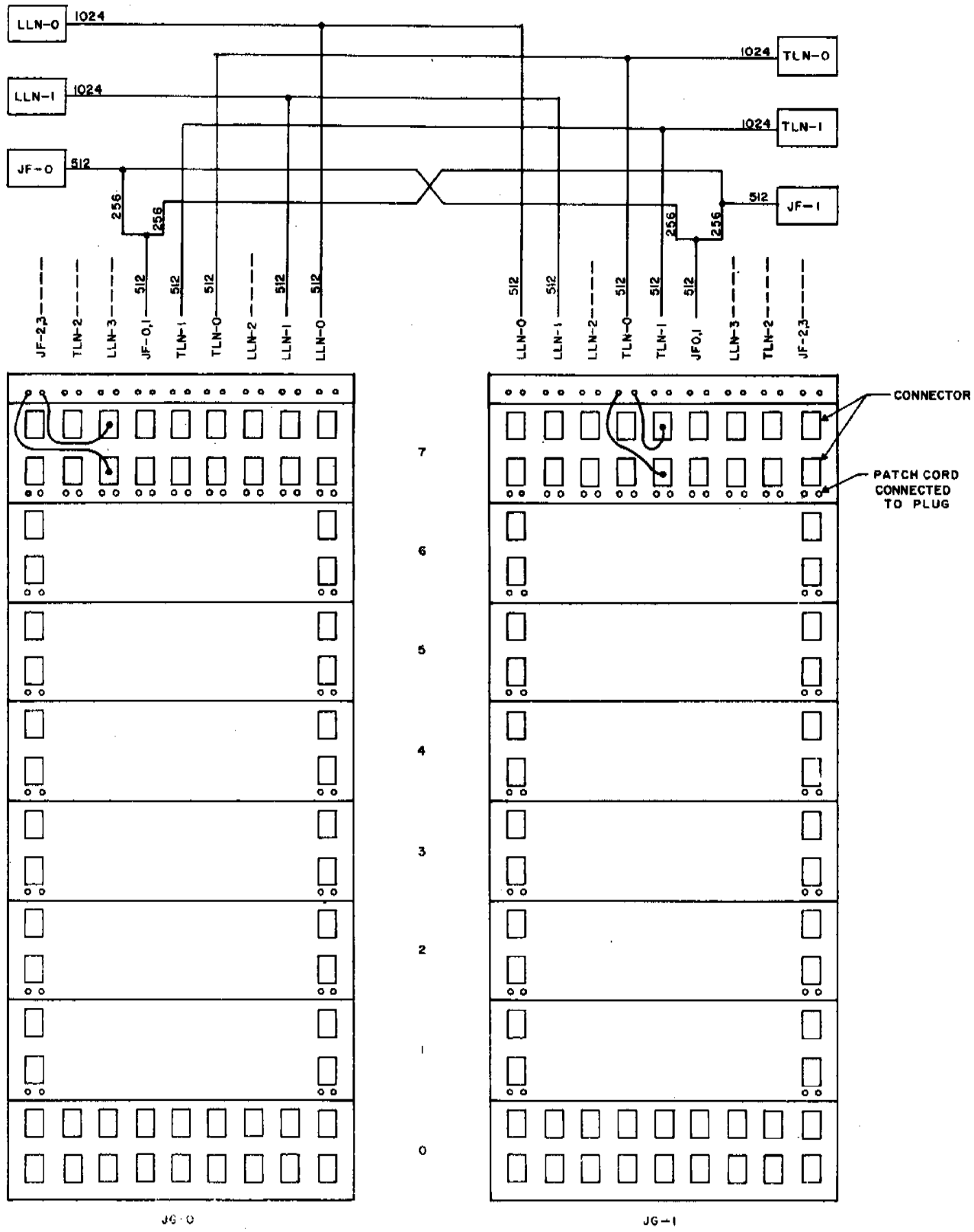

Figure 9-76 Typical Junctor Grouping Frame Layout

TCI Library: www.telephonecollectors.info

JGF bays are always added in pairs up to eight pairs. For each pair, one bay is added to the left and one to the right of the bays already installed.

Except in rare instances, a cord is always plugged into a connector on the same shelf level. When two bays are involved in the connection, both must be in the same half of the line-up of JGF bays.

9.11 JUNCTOR, TRUNK, AND SERVICE CIRCUITS

A. GENERAL

Junctor, trunk, and service circuits have the following common characteristics:

(a) They are used to complete and supervise paths established through the switching network.

(b) They have very little, if any, autonomy. With very few exceptions, relays within these circuits operate only under the direction of the central (CC) via a signal distributor (SD) or central pulse distributor (CPD). Via a scanner, CC detects any change in the trunk or loop conditions that result from relay operations or from actions by a customer or a distant office.

The junctor circuit is used only in talking paths for intraoffice calls and has both ends connected to line link networks.

A trunk circuit is a switching circuit at one end of a trunk. (A trunk is a communication channel between two switching machines.) Trunk circuits are used to complete interoffice or operator calls. The trunk circuits of the No. 1 ESS are considerably simpler than those of electromechanical systems. Their functions are limited mainly to transmission and supervision. All other functions of conventional trunks such as pulsing, charging, timing, etc. are delegated either directly to the stored program control or to the service circuits which in turn are under program control.

Service circuits are auxiliary circuits connected through the network to lines or trunks, as required. They perform functions which can be handled more economically by a few special circuits than by providing additional equipment in each trunk.

All junctor circuits are on plug-in units mounted on junctor frames. Most trunk circuits and some service circuits are on plug-in units mounted on universal trunk frames.

TCI Library: www.telephonecollectors.info

The plug-in design imposes certain restrictions on the size of the circuit and on the maximum number of scan and distributor points per plug-in unit (four scanpoints, six SD points, no CPD or master scanner (MS) points.) Trunk and service circuits that do not lend themselves to the plug-in design are built on 25-inch mounting plates and installed on miscellaneous trunk frames; they are known as wired-in units.

B. JUNCTOR CIRCUIT FUNCTIONS

The junctor circuit is used to complete intraoffice calls. It includes a transmission circuit which provides ac coupling between the two lines and supplies talking battery individually to each line. It also includes two magnetic latching cut-through relays, CT1 and CT2. These relays connect battery after the network path has been closed and remove battery before the network path is opened, in order to protect the network ferreeds. Supervision of each line is provided by feeding the talking battery through an associated ferrod.

C. TRUNK CIRCUIT FUNCTIONS

In line with established practice, No. 1 ESS trunks are classified as outgoing, incoming, or 2-way depending on whether the local office, the distant office, or both can originate a call. They may be further classified by the type of supervision used, by special features provided, etc.

All connections between No. 1 ESS trunk circuits and service circuits are made through trunk link networks. At times, a trunk circuit must be reduced to a mere pair of wires to allow the associated service circuit to accept certain pulsing and supervisory signals; this is called the bypass state. In this state, all transmission elements and supervisory bridges are switched out to provide a clear metallic path through the network.

The trunk repeat coil of some trunk circuits can be switched in or out as required for local or tandem calls. Similarly, a compensating coil is inserted on local calls and bypassed on tandem calls to provide a fairly constant transmission level. A 900-ohm termination is connected across the trunk to keep associated repeaters from oscillating when the trunk circuit is open-circuited at the trunk link frame side.

Supervision of the local side of a trunk is effected in the local talking state by feeding battery and ground toward the customer's set through ferrod sensors. To supervise the distant office, arrangements which are compatible

TCI Library: www.telephonecollectors.info

with the trunk circuit at the far end are provided. For example, outgoing loop type trunks arranged for reverse battery supervision use a polarized ferrod sensor bridge to detect reversals. Where ferrods cannot be used directly as for sleeve lead supervision, relays are used to detect the supervisory signals. These relays then activate ferrod sensors.

D. SERVICE CIRCUIT FUNCTIONS

Examples of service circuits include transmitters and receivers for handling the signaling information needed to set up calls, ringing circuits for alerting called customers, tone circuits, and coin control circuits for collecting or refunding coins. Most of these circuits are mounted on the miscellaneous trunk frame.

E. CUSTOMER DIAL PULSE RECEIVER CIRCUIT

The customer dial pulse receiver circuit (CDPR) furnishes dial tone to the customer and detects digits pulsed from a dial set. A relay in the CDPR detects the dial pulses and supervises the customer's switchhook.

F. TOUCH-TONE RECEIVER CIRCUIT

The TOUCH-TONE receiver can detect TOUCH-TONE signals as well as dial pulses. It consists of a CDPR combined with a TOUCH-TONE calling detector circuit. (Information derived from a translation of the customer's line scanner equipment number tells the system whether to connect a CDPR or TOUCH-TONE receiver to the line.) A TOUCH-TONE signal involves two frequencies, one from a low group (697,770,852, or 941 hz) and one from a high group (1209,1336,1477, or 1633 hz). For each of the eight frequencies, there is a bandpass filter tuned to that frequency. Each filter output connects to a scanpoint which is activated when the corresponding resonant frequency is transmitted. A ninth scanpoint gives a signal present indication. When a call is originated from a TOUCH-TONE set, the line relay in the CDPR supervises the customer's switchhook as for a dial set. However, the relay will not respond to the relatively high frequencies of the TOUCH-TONE signals. These pass over the bridged connection to the TOUCH-TONE detector. If a legitimate signal is present, two of the eight frequency scanpoints in the trunk scanner will become active. If both of the tones received persist for a certain time interval, the SP scanpoint will become active. When CC detects an output from the SP point, it reads the eight frequency scanpoints to recognize the transmitted digit. The frequency scanpoints are not inspected again until the SP scanpoint goes down and comes up again for the next digit.

TCI Library: www.telephonecollectors.info

G. INTEROFFICE RECEIVERS

The completion of a call made over an incoming trunk requires that some form of receiver be connected to the trunk. The receiver must accept the particular type of pulsing being transmitted and convert it into a form that the CC can observe via a scanner. Three types of receivers, MF (multifrequency), DP (dial pulse), and RP (revertive pulse) are provided. A point of similarity in these circuits is that they all employ some form of detector whose outputs control scanner ferrods. If the associated trunk circuit is in the bypass state, the receiver must provide disconnect supervision.

H. TRANSMITTERS

The basic job of transmitters in No. 1 ESS is to pulse information to a terminating office to control switching equipment there. Four types of transmitters are provided: MF, DP, RP, and PCI (panel call indicator). The transmitter selected depends, of course, on the type of receiver at the distant office. However, if all the trunks in a primary route to a called office are busy, the system can select an alternate route using a different trunk group. The type of pulsing is not necessarily the same for primary and alternate routes. Information derived from a translation of the trunk group number tells the No. 1 ESS which type of receiver to connect to the outgoing trunk.

Before a transmitter can begin pulsing, certain preliminary tests must be made and certain signals received from the distant end indicating that it is ready to receive digit information. The type of trunk being served by the transmitter will determine which tests are to be performed. In general, loop-type trunks, including the trunk circuit at the distant office, arranged for reverse battery supervision will be tested for dc continuity and proper polarity. For nonloop-type trunks, a test of the network continuity between the trunk and the transmitter will be made. Polarity may or may not be tested. A short reversal of the loop known as a wink signal tells the No. 1 ESS that a receiver has been attached to the trunk at the distant. About 300 msec after the wink has been received, pulsing begins.

TCI Library: www.telephonecollectors.info

Whether or not the trunk loop is supervised depends on many factors. For example, on mf calls, once the wink has been received, pulsing will go ahead regardless of the trunk polarity. On dp calls, the transmitter may be required to monitor the trunk loop for polarity changes to be interpreted as delay dial, stop dial, etc., as determined by the program. At any rate, the facilities for supervising the trunk loop are built into the transmitters and are available, if required.

A transmitter does not supervise the calling line; this is done by the CDPR which normally remains connected to the line until outpulsing is finished. However, if the system cannot find an idle CDPR for a new customer, it searches for a connection which is in the outpulsing state. It then releases the CDPR involved and reconnects the associated line to its line ferrod which takes over supervision of the line. The released CDPR can now be connected to the new customer.

I. RINGING CIRCUITS

Two types of ringing circuits, regular and special, are provided in No. 1 ESS. The regular circuit performs the bulk of the ringing jobs and isused for calls to individual, 2-party, PBX, and coin lines. The special circuit provides coded, superimposed, reverting and rural ringing, and off- and on-hook ringback; it is provided in relatively small quantities for the special jobs that the regular circuit cannot handle. In order to connect the required type of ringing to the customer's line, the SD operates appropriate combinations of relays in the ringing circuit as ordered by the program. However, before ringing current is applied, the line is tested for a power cross (to 50 volt dc or 110/440 volt ac) and for a grounded tip or closed loop. Then, when ringing is connected, a continuity test is performed by monitoring the current flow. When the called customer answers, a dc path is closed operating a tripping relay which disconnects the ringing current. This is one of the cases where a trunk circuit relay operates independently of the system.

J. TONE OR RECORDED ANNOUNCEMENT CIRCUIT

Various standard tones an announcements are used to inform customers and operators of conditions encountered during the progress of a call. Access to any of these facilities is via a tone or recorded announcement circuit. Circuits of this type are located on the universal trunk frame. They are connected to the required tone or announcement equipment.

TCI Library: www.telephonecollectors.info

K. COIN CONTROL CIRCUIT

The coin control circuit (CCC) has three basic functions: to test for the presence of a coin, to collect a coin deposit, and to return a coin deposit. At some stage of every coin call, a CCC will be connected to the line to dispose of the initial deposit. If the called line is busy or does not answer, the coin will be returned when the calling line disconnects. If the called line answers, the coin will be collected upon disconnect or at the expiration of a timed talking period. At various times the CCC will be connected to determine whether an overtime coin deposit is present. The CCC also performs functions which minimize faulty operation. It drains the loop of residual electric charges by connecting a high resistance leak. It is also arranged to prevent false operation of the coin-box relay.

L. CONFERENCE CIRCUIT

The conference circuit permits a maximum of four customers to carry on a joint conversation through the No. 1 ESS network. It has four separate appearances or ports at the trunk link network. Each port has three talking states, local, trunk, and split. The local state is used when a customer of the local office is connected to a port and provides supervision of the customer line. The trunk state is used when a trunk from a distant office is to be connected to one of the conference circuit ports. In this state, supervision of the distant office is performed by the trunk circuit, not the conference circuit. In the split state, the line or trunk is connected to the port for supervision but not for conversation.

M. NETWORK ACCESS CIRCUIT

This circuit provides a means for connecting test circuits in the trunk and line test panel of the master control center to trunks or lines via a network path. Its primary function is to furnish a clear metallic path for voltmeter tests. It is also used as a holding circuit for a line showing a permanent signal and is arranged to hold a line with a leak condition that would not ordinarily hold a junctor circuit or trunk circuit.

TCI Library: www.telephonecollectors.info

N. MAINTENANCE

The junctor circuits and most of the trunk and service circuits are functionally tested while they are performing their normal jobs. A teletypewriter printout plus an alarm will inform the maintenance man when a circuit is in trouble. His subsequent action depends on the type of equipment (plug-in or wired-in) and on whether an incoming or outgoing circuit is involved. Incoming circuits must be made busy at the distant end. Outgoing circuits or service circuits which are selected by the No. 1 ESS are made busy via a teletypewriter message. If the circuit is in trouble is part of a dual unit, the mate circuit must also be made busy. This is true for both incoming and outgoing circuits. If the circuit in trouble is of a plug-in type, it will probably be removed and replaced by a good unit. In the case of wired-in circuits, techniques similar to those presently used by telephone office maintenance personnel will be used to clear the trouble.

9.12 MASTER CONTROL CENTER

A. GENERAL

Communicating between the No. 1 ESS and its operating personnel is achieved by the following means:

(a) Conventional or relay controlled office alarm systems.

(b) Local alarm circuits, display lamps, and power removal switches it the individual system units.

(c) Teletypewriters which may be in the same or other offices, visual displays, and manual controls at the master control center (MCC).

Whenever trouble is detected by a local alarm circuit, the office alarm system alerts the maintenance man; by means of pilot lamps, it directs him to the faulty equipment unit. Most troubles, however, are detected by the system under program control. In this case, the office alarm system directs the maintenance man to the MCC.

For a locally detected trouble, the alarm is retired at the faulty unit by removing power. For a system-detected trouble, the alarm is retired at the MCC where a diagnostic printout is given at the teletypewriter. Using this printout, the maintenance man consults a dictionary to obtain the location of the fault.

TCI Library: www.telephonecollectors.info

The teletypewriters are used by the operating personnel to type into the system recent changes of translation information, requests of various types, etc. The system, in turn, uses the teletypewriters to print out test results, traffic information, permanent signal conditions, etc.

Additional facilities are provided at the MCC for storing AMA information on magnetic tapes, for updating the translation information contained in the program stores (PS), and for testing lines and trunks. Thus, the MCC represents the maintenance and administration center of the office.

The Master Control Center consists of five major sections:

1. Alarm display and manual control panel
2. Line and trunk test panel
3. Teletypewriters
4. AMA recorder
5. Memory card writer

B. ALARM DISPLAY AND CONTROL PANEL

The alarm display and control is the centralized control point for the No. 1 ESS. In addition to a number of rotary switches, the panel contains various lamps and keys of either the locking or nonlocking type. In each key, a lamp mounted in the spring pile-up behind a transparent button serves as a visual indication of an operated and locked position. A locked key is restored to normal simply by pushing back to its regular position.

1. System Alarm

All system detected troubles result in an audible alarm and either a MINOR or MAJOR lamp indication. The alarm is retired by operating the ALARM RELEASE key at the bottom right of the sloping panel.

2. Status Display of System Units

The lamps in this group display the status of individual units or groups of units. Each signal processor (SP) and each central control (CC) has two lamps: one is labeled TBL and lights when the

TCI Library: www.telephonecollectors.info

unit is in trouble; the other is labeled ACT and lights when the unit is in active status. Each PS has a lamp that lights when the store is out of service. Two lamps are provided for the line switch frames. Similar considerations apply to the other groups of units (junctor switch frames, trunk switch frames, etc.)

3. Signal Processor Control

By depressing the nonlocking STOP or ST key, the operating personnel can stop or start the SP community previously selected by depressing the SELECT COMMUNITY locking key A or B. Each SP has two lamps: the STOP lamp lights when the SP has been stopped and the POWER lamp remains lighted as long as the power is on.

4. Traffic Control

(a) Emergency transfer: The EMERGENCY TRANSFER key, when operated, causes certain high-priority customers to be connected to the DSA or toll switchboard via previously assigned outgoing trunks. When the transfer of lines is carried out by the operation of appropriate relays, the EMERGENCY TRANSFER lamp is lighted and a major alarm is given.

(b) Line load control: During an extremely busy service period, the system may find itself running out of time and unable to handle the traffic. Under such conditions, the system lights the MAIN OVERLOAD lamp and sounds the minor alarm. By depressing the LINE LOAD CONTROL key, the operating personnel can request the system to institute line load control, whereby some nonpriority customers are denied service. The number of customers to be denied service increases with the degree of overload.

The system carries out the request for line load control only if an overload condition does exist. The LINE LOAD CONTROL lamp is lighted and a major alarm is given.

TCI Library: www.telephonecollectors.info

(c) Toll network control: By depressing the TOLL NET. CONTROL key, the operating personnel can request the system to deprive all but high-priority customers of access to selected toll trunk groups. Regardless of the load, the system carries out the request for toll network control, lights the TOLL NET. CONTROL lamp, and gives a major alarm. In addition, if an over load exists, line load control is automatically instituted.

5. Status

This group contains miscellaneous displays as follows:

(a) MULT TBL - This lamp lights whenever the system detects that:

(1) A trouble exists in the active CC and the standby CC is already in trouble,

(2) A complete copy of program and translation information is not available, or

(3) A complete copy of CS information is not available.

(b) DIAGNOSIS IN PROGRESS - This lamp lights whenever an automatic diagnosis of some system unit has been started.

(c) SYS OFF NOR - This lamp lights when any key or switch on any other frame control panel is not in the normal position.

(d) PERIPHERAL CONTROL - This lamp indicates parrial or total loss of control of the peripheral bus system.

(e) MISC TBL - This lamp refers the operating personnel to the teletypewriter for a report on a miscellaneous alarm. Miscellaneous alarms include power crosses on customer lines, false cross and ground failures, etc.

TCI Library: www.telephonecollectors.info

6. Bay Control

The PWR ALARM lamp indicates a power failure at the alarm display and control frame. Depressing the PWR OFF key removes power from the frame. A lighted OFF NOR lamp indicates an operated key or switch on the alarm display and control panel.

7. Emergency Action

By depressing the SELECT ACTIVE key for CC0 or CC1, the operating personnel can force the selected CC to acquire active status. By depressing the SELECT PS BUS key for bus 0 or 1, the operating personnel can force the specified PS bus to work with the active CC. By means of the PROGRAM STORE STATE CONTROL rotary switch, the operating personnel can select one of eight states or configurations of PS to work with the active CC and the selected PS bus. In each of the eight states, one or more PS's are forced out of service. The remaining stores still contain a complete copy of program and translation information.

8. Repeated Time-Outs

An emergency action (EA) circuit in CC guards against trouble conditions that impair the system's ability to remove from service one or more faulty units and to assemble the remaining units in a workable combination. The EA circuit forces, in sequence, different combinations of buses, PS's and CC's to restore normal system operation. If the EA fails to assemble a workable combination, a signal is sent to the MCC; this signal:

(a) Opens the fail-safe loop to the remote maintenance teletypewriter.

(b) Lights the red REPEATED TIME-OUT lamp.

(c) Activates the MAJOR ALARM.

The EA circuit can be disabled by operating the DISABLE TIME-OUT key.

TCI Library: www.telephonecollectors.info

9. Error Detection

There are two modes of error detection, join and disjoin, in CC. In the join mode, both CC's perform an error correction or a reread of store information when either CC detects an error. In the disjoin mode, each CC performs an error correction or a reread as required by its own error detection circuits. The DISJOIN lamp is lighted when the active CC is in the disjoin mode. The DISJOIN and JOIN keys can be used to force the active CC into the disjoin or join mode, respectively.

10. Central Control and Bus Isolation Control

The lamps in this group display how the CC's are associated with the duplicated buses for PS's, CS's, peripheral units, and central pulse distributors (CPD). For each CC and each PS or CS bus, the SEND lamp lights when CC is connected to send information on the bus. Similarly, the RCV lamp lights when CC is connected to receive information from the bus. For each CC, the PWR lamp is on as long as CC has power applied to the cable pulsers associated with the bus.

11. Answer Bus

The two lamps indicate whether the active CC is using scanner answer bus 0 or bus 1. By setting the rotary switch to the BUS 0 or BUS 1 position and by depressing the SET MAN. key under EMERGENCY ACTION, the operating personnel can force both CCs to use bus 0 or 1.

12. Store Display

By setting the rotary switch to one of the position PS0 to PS5, the operating personnel can request that the association of a specified program store with CC-PS buses 0 and 1 can be displayed on the eight lamps. When lighted, the four lamps for bus 0 have the following meanings:

(a) TBL - Sending and receiving operations over bus 0 for the specified store are inhibited.

(b) H OUT - The specified store transmits any word read from its H half to bus 0.

TCI Library: www.telephonecollectors.info

(c) IN. - The specified store receives information from bus 0.

(d) G OUT - The specified store transmits any word read from its G half to bus 0.

The four lamps for bus 1 have similar meanings. By setting the rotary switch to the CALL STORES position, the operating personnel can request a display for a CS whose identity is specified by means of a teletypewriter input message.

13. Peripheral Mode

In the normal mode of operation, only one of the peripheral address buses is used, as selected by the F_{14} bit of the F register in CC. Two other modes are available for testing purposes. In mode A, the active CC transmits over both buses. In mode B, the active CC transmits over the bus selected by the F_{14} flip-flop, and the standby central control transmits over the other bus.

14. Central Pulse Distributor Mode

In the normal mode of operationg, only one of the two buses between CC and the CPD is used, as selected by a CPD B flip-flop in CC. The state of this flip-flop can be changed under program control. Two other modes of operation are available for testing purposes. In mode A, the active CC transmits over both buses. In mode B, the active CC transmits over the bus designated by the CPD B flip-flop; the standby CC transmits over the other bus.

15. Program Interrupt Control

The operating personnel can request that a program interrupt take place and that some action be carried out as selected by one of six INTERRUPT REQUEST keys labeled A to F. Key A, for instance, requests system reinitialization.

16. Program Display

24 lamps can be used to display the contents of memory locations and scanner readouts. The display is requested by means of a teletypewriter message specifying the location of the desired information and under what conditions the information is to be displayed.

TCI Library: www.telephonecollectors.info

C. LINE AND TRUNK TEST PANEL

GENERAL

The line and trunk test panel contains the facilities for (a) the removal from service and the testing of outgoing trunks, service circuits, and customer lines and (b) the disposition of permanent signals.

A TOUCH-TONE set is associated with the master test line. This line has an appearance at the line link network and requests service in the same manner as a customer line. Using the TOUCH-TONE set, the operating personnel keys into the system the equipment number of the circuit to be tested. Instructions for various tests are specified by the operation of the locking keys of the type previously described for the alarm, display, and control panel. These keys are observed by the system via the MS. The status of the circuit under test and the results of the tests are displayed by lamps controlled via a CPD or an SD. Meters and associated lamps and keys are provided for voltmeter and transmission tests.

Through the network, the master test line can be connected to any trunk or service circuit to be tested. Thus, it is not necessary to provide OGT (outgoing trunk) jacks for every trunk in the office at some test and control panel, as for existing central offices. An outgoing trunk can be marked busy in temporary memory by depressing a MAKE-BUSY key at the test panel. An audible alarm alerts the operating personnel if customer service will be adversely affected by the number of circuits removed from service. Through the network and an access trunk, any trunk or service circuit can be connected to the voltmeter or transmission test facilities. Likewise any customer line can be connected through the network and access trunk to the voltmeter test facilities.

D. TELETYPEWRITERS

GENERAL

Teletypewriters are used as the primary means of communication between the operating personnel and the No. 1 ESS. Through them, the operating personnel can request specific system actions, and the system can report back on these actions or on various internal conditions.

A number of teletypewriter channels are provided for an office. Each channel includes a tip and ring loop and the hardware needed for transmitting serially teletype signals. Each channel is equipped with a Teletype Corporation Model 35

TCI Library: www.telephonecollectors.info

teletypewriter. One maintenance teletypewriter is always located at the MCC. The other maintenance teletypewriter may be located at another place within the office or at a remote maintenance center if the office is to be unattended. The number of channels in a system depends on the needs of the operating company.

A typical teletypewriter system with five channels is shown in Figure 9-77. Teletypewriter No. 1 is located at the MCC; teletypewriter No. 2 is located at the remote maintenance center. When the office is unattended, the relaying of ESS alarms is accomplished via this teletypewriter channel. A special sequence of signals over the channel activates the alarm system at the remote maintenance center. The operating personnel retires the alarm, consults the teletypewriter printout for the nature of the trouble, and takes the necessary action. Should the No. 1 ESS office become unable to communicate with the remote center, a fail-safe relay releases, opening the teletypewriter loop. An open loop activates a major alarm at the remote center indicating that immediate attention is required. Another channel is provided for recent changes with a teletypewriter at an assignment bureau or at an electronic data processing center. A fourth channel terminates at a test bureau. It is a one-way channel used to report automatic line insulation test (ALIT) results and permanent signal data. The maintenance channel may be used for this purpose, if the test bureau is in the electronic office. Teletypewriter No. 5 is used to transmit traffic information to a traffic data center. The No. 1 ESS can also communicate with remote teletypewriters via the toll voice networks (mechanized TWX service).

1. TTY Transmit and Receive Unit

A buffer, called a transmit-receive (TR) unit, is inserted between CC and the teletypewriter. The TR unit operates in two modes: transmit and receive. In the transmit mode, the CC sends seven bits (1 character) in parallel via the peripheral address bus to the TR unit every 100 msec. With an average of six characters per word, information is transmitted at the rate of 100 words per minute. The TR unit converts the information received in paralel for each character into serial form and closes and opens the teletypewriter loop in the required sequence during 11 consecutive intervals; these are called marking or spacing intervals depending on whether the loop is closed or open, respectively.

TCI Library: www.telephonecollectors.info

In the receive mode, the TR unit detects the marking and spacing intervals in the teletypewriter loop and assembles them into a single character of seven data bits. The seven bits are detected by CC in parallel via seven master scanner points.

Several signaling techniques can be used for serial transmission over the teletypewriter loop. Whenever feasible, private line communication employs 20-ma dc signaling with marking and spacing intervals. If signaling to a remote point is not feasible on a dc loop basis, two 105A data sets are inserted in the loop: one at the TR unit and the other at the remote teletypewriter. The 105A data sets convert the dc signals to frequency shift signals or vice versa.

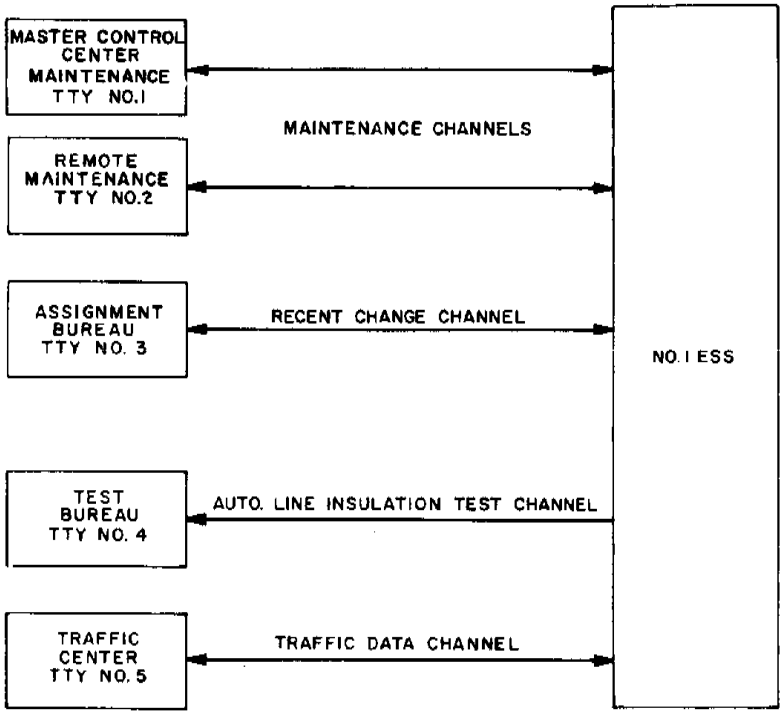

Figure 9-77 Typical Teletypewriter Channels

TCI Library: www.telephonecollectors.info

E. AUTOMATIC MESSAGE ACCOUNTING RECORDER

GENERAL

The automatic message accounting (AMA) recorder is used to store customer charging information on magnetic tapes. These tapes are then forwarded to a data processing accounting center where they are used to compute customer charges. Usually a single 2400-foot reel of tape is sufficient to store all the charging information for one day. A duplicate AMA unit is provided for reliability and continuity of recording. Additional recorders can be installed when necessary.

1. Apparatus Elements

Each recorder consists of a tape transport and an associated controller. The tape transport is mounted on a standard 25-inch relay rack. The front hinged dust cover is of plexiglass for veiwing of the control buttons, tape loop, and reels. Separate write and read heads are used for writing and reading the information on the half-inch 9-channel tape.

2. General Handling of Information

The system assembles all the charging data pertaining to a call into a single entry which is stored temporarily in a tape buffer area in a CS. A typical entry requires nine CS words. In some instances, an entry may require as many as 16 words. The tape buffer area consists of a 100-word block. When enough entries have been accumulated to fill this block, the information is transferred to the AMA recorder.

The AMA information is duplicated in two physically distinct CS's. Thus, there are two complete copies of the data accumulated in the 100-word block. The CC has the ability to obtain data from either copy and send it to either AMA recorder over either peripheral unit bus.

TCI Library: www.telephonecollectors.info

F. MEMORY CARD WRITER

1. General

In addition to program instructions, the Program Stores (PS's) contain various types of translation information. Any changes that supersede part of this translation information are entered initially in a call store (CS) area called the recent change memory. Whenever the system requires a particular item of translation information, it searches for it through the recent change memory. If the system does not find the desired item in the temporary memory, it refers to the translation section of the semipermanent memory.

When enough entries have been accumulated to fill the recent change memory, the memory card writer (MCW) is used to prepare, under program control, a new set of twistor cards that incorporate the changes. The recent change memory becomes available to accommodate subsequent changes until it is again necessary to prepare a new set of cards.

2. Apparatus Elements

Card Loader

Each PS contains 16 modules. Each module, in turn, contains 128 twistor cards, each with 64 rows of 44 small magnets. The cards of a module are handled as a unit. All 128 cards are inserted into, or withdrawn from, a module by a motor-driven magazine or loader. The loader is used to transport the cards between the card writer and the PS's. After the appropriate information has been written on a full module of spare cards, the latter is substituted for a module in a PS. A card loader weighs about 35 pounds when full and about 18 pounds when empty.

The cards in a module are divided into two groups: 64 left-hand cards and 64 right-hand cards. The cards are alternately right-hand and left-hand with the magnet sides facing each other. When a full loader is clamped to the MCW, one half of the cards have their magnets faced up and one half faced down. In order for either the left- or right-hand cards to be mounted with their magnets faced up,

TCI Library: www.telephonecollectors.info

two mounting positions, PASS A and PASS B are provided. In the PASS A position, 64 cards are processed. The loader is then manually inverted to the PASS B position and the remaining cards are processed.

3. Card Writing Unit

The MCW includes the card writing unit. This mechanism withdraws one card at a time from the loader. It writes information on the card one word at a time, by passing a 45-section writing head across the surface, and returns the card to the loader. The latter is automatically moved up and a new card is withdrawn. It takes about four seconds to withdraw a card, write the information, and reinsert the card. The time required for one pass of all right-hand or left-hand cards is about 4.5 minutes.

4. Method of Operation

The MCW is capable of sequentially handling and writing a full module of 128 cards in two passes of 64 cards each. Before writing a word, the card writer requests the necessary information from the system and stores it in a 44-bit register. Operation is automatic during each pass. Local audible and visual alarms indicate when attention is required.

The MCW is operated from a control panel which contains a number of lamps and pushbuttons.

The operating personnel initiates a card writing operation by typing a message at the teletypewriter. The system responds with a message listing all the translation modules for which there are entries in the recent change area. The system will still accept recent changes during card writing. Via a teletypewriter message, central control is informed of the identity of the module to be written. A loader containing spare cards is clamped on the card writer. The spare cards just processed are now used to replace an associated module of cards in some program store.

TCI Library: www.telephonecollectors.info

The operator removes the module of cards from the PS using an empty loader. He then inserts the newly written cards using the same loader that transported them to the card writer. Their information content is verified before the PS is restored to service.

If the verification is not successful, the new cards must be replaced by the old set. The teletypewriter is then consulted for a printout of the verification errors. Depending on the nature of the results, several procedures may be followed: (a) the entire set of cards may be rewritten, (b) maintenance procedures may be instituted to locate the cause of a gross failure, or (c) the corrections for the errors found during verification may be entered as recent changes in temporary memory.

9.13 METHOD OF OPERATION - NO SIGNAL PROCESSOR

Whenever it is stated that central control (or the system) performs some function, it must be understood that this function is carried out by central control (CC) under the direction of the program. It should also be remembered that the network map, the path memory, the busy-idle bits, the various call registers (originating, ringing etc), the peripheral order buffers (POB's), the hoppers, etc, are all areas in call store (CS) memory.

A. DIAL TONE CONNECTION

Assume that a call is originated by an individual line (L_o) that transmits dial pulses to the central office. During the 100-msec supervisory scan of lines, when central control (CC) requests a reading of the row containing the scanpoint of L_o, it detects a mismatch between the scanner reading and the associated line busy-idle word on the call store (CS). This word contains the previous scanner reading for the row containing L_o. Since the line scan supervises for originations only, the mismatch indicates that at least one line has gone off-hook. (Assume that L_o is only one.) Dial tone must now be given to the customer via a customer digit receiver to indicate that he can start dialing. To request this, the CC enters in the line-service-request-hopper of the CS a line scanner number (LSN) which completely identifies the scanpoint associated with L_o.

TCI Library: www.telephonecollectors.info

Milliseconds later, CC unloads the LSN from the line-service-request-hopper and converts it into a line equipment number (LEN) which completely identifies the terminal appearance of L_o at the switching network. Then, CC hunts for and seizes an idle senior originating register (ØR) and records in it the LEN.

Next, CC converts the line equipment number into the program store address of the LEN translation information for the calling line (L_o). This information gives the line class, the directory number (DN), and the type of digit receiver to be connected to the line. It also indicates whether the line has special originating features, such as abbreviated dialing. CC stores the translation information in the ØR.

Knowing from the translation that line L_o transmits dial pulses, CC hunts for an idle customer dial pulse receiver (CDPR). Having seized a CDPR, CC searches the network map and selects a path from the orignating line to the dial pulse receiver. (See Figure 9-78 - Network Connection.)

CC loads a peripheral order buffer (POB) with the information needed to establish the connection. In addition, the POB is used to store the orders for all subsequent peripheral actions associated with giving dial tone. At 25-msec intervals, the POB is unloaded.

Before the paths are closed through the LLN and TLN, a false cross and ground (FCG) test is performed. After the paths are closed, a power-cross test is performed; if L_o is a party line, a party test is performed.

Via the signal distributor (SD), CC operates the dial tone relay in the CDPR to give dial tone to the calling customer. The transfer of supervision from the line scanner to the trunk scanner is checked by verifying that L_o appears off-hook at the CDPR.

Finally, the junior originating register (JØR) associated with the CDPR is made ready to count pulses. The address of the ØR is stored in this JØR.

The dial tone connection job is now complete. In addition to the LEN of the calling line, the originating register holds the identity of the junctor and the CDPR used in the connection. This information makes it possible to take down the connection if the call is abandoned. It usually takes less than 300 msec to return dial tone to the calling customer. Figure 9-78 summarizes the description of the dial tone connection.

TCI Library: www.telephonecollectors.info

When CC detects an origination during a 100-msec line scan, it enters the **LEN** of the originating line (L_O) into the line-service-request-hopper.

CC unloads entry from line-service-request-hopper.

CC hunts for ØR.

LEN is translated to class information which is stored in ØR.

CC hunts for a CDPR.

CC hunts for path in network map.

POB is loaded with;

(a) Link address for line-to-CDPR connection.

(b) SD and scanner addresses for FCG test.

(c) SD and scanner addresses for power-cross test.

(d) SD address to operate dial tone relay.

(e) Scanner address to check transfer of supervision.

Network path information is recorded in ØR for a possible abandonment.

JØR is initialized.

Dialing connection is completed. Dial pulse scanning starts.

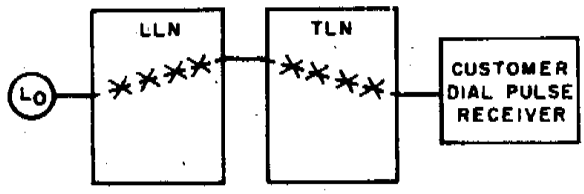

NETWORK CONNECTION

Figure 9-78 Summary of Dial Tone Connection Including Network Connection

B. INTRAOFFICE CALL

This description covers a call between two individual lines served by the same CC. The calling line L_O is assumed to transmit dial pulses to the CC.

The actions to give dial tone to the calling customer are completed as previously described. Dial tone is removed after the first pulse of the first dialed digit. Dial pulses are counted and recorded in the JØR. As each digit is completed, it is transferred to the ØR via the dial pulse digit hopper.

TCI Library: www.telephonecollectors.info

When the first digit is completed, CC determines that it is neither a 0 nor a 1. Next, the second and third digits are detected and recorded. A translation of the dialed office code informs CC that an intraoffice call is in progress and that seven digits are expected. This information is recorded in the ØR.

Upon completion of the seventh digit, CC converts the directory number of the called customer line (L_o) to a program store address. Here it finds the LEN and the terminating class features of the called line.

CC converts the LEN of the called line to the location of the line's busy-idle bit in the CS. This bit tells CC that the called line is idle; the bit is marked now to indicate that the line is busy.

CC seizes a ringing register (RR) in the CS to record the information it needs during the ringing phase of the call.

From the network map, paths are selected between L_o and an audible ringing tone circuit and between L_o and a ringing circuit Figure 9-79A. The appropriate orders are loaded into a POB. Also, a path from the calling to the called line is selected, reserved, and recorded in the RR.

The customer dial pulse receiver is released; the network path, the OR, and the JOR are marked idle in memory. The CC records in the ringing register the junctor network number of the junctor reserved for the talking connection. It also records the network location, or trunk network number (TNN), of the ringing and audible ring circuits.

While ordering the setting up of the ringing connection, CC also requests that the following checks be made:

(a) Power cross

(b) Continuity

(c) Pretrip

(d) Ringing

Every 100 msec, the ringing circuit is scanned for answers; the audible ringing circuit is scanned for a possible abandonment.

When the called line answers, ringing is automatically tripped by a relay in the ringing circuit. The ringing and audible ringing tone circuits are released and the temporary memory is brought up to date by CC.

TCI Library: www.telephonecollectors.info

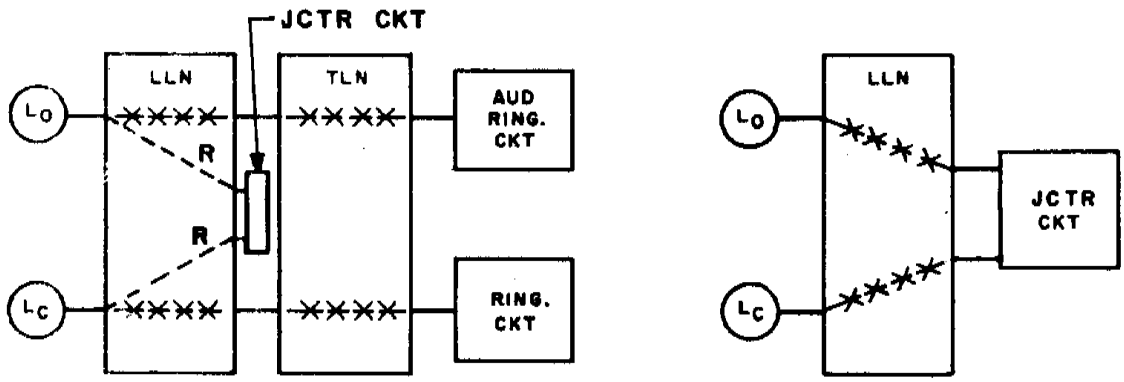

A RINGING CONNECTION

B TALKING CONNECTION

Dial tone is connected.

Dial tone is released after first pulse of first digit.

After the third digit, the office code translation indicates that the call is intraoffice and seven digits are expected.

The seventh digit is recognized by CC.

Dialed directory number is translated to LEN.

LEN is converted to the location of called line's busy-idle bit. Line is found idle.

CC seizes RR.

CC hunts through network map for paths between (a) L_O and audible ring circuit, (b) L_c and ringing circuit, and (c) L_O and L_c.

CDPR JØR and ØR are released.

CC loads a POB with orders to connect audible ring to L_O and ringing to L_c - Talking path from L_O to L_c is reserved.

Power Cross Test, Continuity Test, and Pre Trip Test are made. Then ringing is applied.

When answer is detected, the ringing and audible ring circuits are released.

Reserved path from L_O to L_c is set up.

RR is released. 100-msec junctor scan supervises for disconnect.

C CALL SUMMARY

Figure 9-79 Summary of Intraoffice Call Including Network Connection

The reserved talking path between L_O and L_c is now established. (See Figure 9-79B.) The transfer of supervision to the junctor scanner is verified.

CC releases the ringing register (RR), and brings the path memory up to date.

TCI Library: www.telephonecollectors.info

When the 100-msec junctor supervisory scan detects a change to on-hook by either the calling or called customer, an interval of 200 to 300 msec is timed. This is done as a safeguard against momentary on-hook conditions, or "hits", which would cause disconnect actions to be performed prematurely. When this hit timing is completed, a disconnect register is seized.

The call is under calling party control but a timed-release feature is provided in order to prevent the calling customer from holding the called line out of service indefinitely by failing to hang up the receiver. After the 200 to 300 msec time-out for the called line, the system times an interval of 10 to 11 seconds if the calling line remains off-hook. During this interval, if the called customer returns to off-hook, the network path is left established. If an on-hook is detected from the calling line or if the time-out occurs, the connection and the disconnect register are released.

C. OUTGOING CALL

This description covers a call from a No. 1 ESS customer to a line in a distant office. The calling customer is assumed to have an individual line that transmits dial pulses to the central office. The pulsing required between the No. 1 ESS and the distant office is assumed to be multifrequency (mf).

The actions to give dial tone to the calling customer are completed as previously described. Dial tone is removed after the first pulse of the first dialed digit. Dial pulses are counted and recorded in the JØR. As each digit is completed, it is recorded in the ØR.

When the first digit is completed, CC determines that it is neither a 0 nor a 1. Next, the second and third digits are detected and recorded.

The office code translation indicates than an outgoing call is being dialed and that outpulsing shall start after all seven digits have been received. (This is true, because of the assumed mf signaling. In the case of dp or rv signaling, outpulsing is usually started after the fifth digit has been received.) The office code translation provides also a route index number which is stored in the ØR and is used to derive routing, alternate routing, and signaling information.

When the last digit is received, CC hunts for and seizes an outpulsing register. Another hunt seizes an outgoing trunk (OGT). The identity of this trunk, the type of supervision, and the number of digits to be transmitted are recorded in the outpulsing register. An mf transmitter is

TCI Library: www.telephonecollectors.info

seized and its identity recorded in the outpulsing register. This register contains also the identity of the originating register that holds the digits to be outpulsed.

The calling line is still being supervised via the trunk scanner at the CDPR. Should this receiver be needed for another origination, the calling line's ferrod would be restored and supervision would be via the line scanner.

The CC loads a POB with the orders to establish the path between the OGT and the mf transmitter Figure 9-80A. The information that identifies a reserved path between the calling line L_o and the OGT is stored in the outpulsing register. The OGT circuit is put in a bypass state and a seizure signal is sent to the distant office. Trunk continuity to the distant office is checked at the mf transmitter. If the check is successful, a "wink" is returned from the distant office. The digits in the ØR are transferred to the junior outpulsing register associated with the mf transmitter. Bursts of tones are then transmitted to identify the called line in the distant office. The CPD is used to operate and release relays that control the tone signals.

At the completion of outpulsing, CC releases the transmitter. The supervision of the outgoing trunk is transferred from the transmitter to the trunk circuit. The previously reserved network path between the originating line and the OGT is established and checked. (Figure 9-80B).

The CDPR, the ØR, the JØR, and the outpulsing register are all released. Every 100 msec via the trunk scanner, the OGT is scanned for answer.

When the called customer answers, the trunk busy-idle bits are marked to the talking state.

When the 100-msec trunk supervisory scan detects a change to on-hook on the OGT, the system starts timing an interval of 200 to 300 msec as a safeguard against a hit. When hit timing is completed, a disconnect register is seized. If the calling line went on-hook first, the connection is released and disconnect supervision is sent to the far end. The trunk is not idled until distant office returns on-hook supervision. If the called line went on-hook first, a timed-release period of 10 to 11 seconds is initiated. If the calling line goes on-hook during the 10 to 11 seconds or if a time-out occurs, the connection is released.

The disconnect register is released after timing a guard interval of 750 msec during which the outgoing trunk cannot be reseized. This allows enough time for all the relays in the distant office to release.

TCI Library: www.telephonecollectors.info

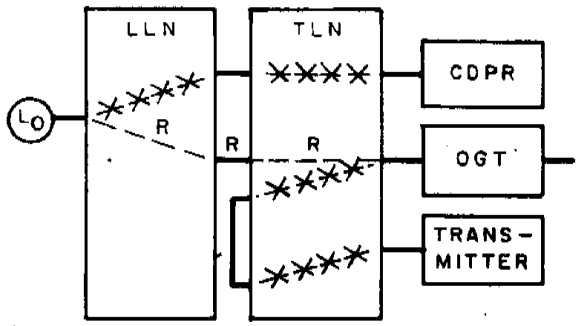

A. SIGNALING PHASE

Dial tone is connected.

After the third digit, the office code translation indicates that the call is interoffice and supplies the route index number.

Completion of dialing is recognized.

CC hunts for;
(a) outpulsing register.
(b) outgoing trunk (OGT).
(c) transmitter.
(d) path from transmitter to outgoing trunk.

CC loads a POB with information (a) to connect transmitter to OGT and (b) to perform FCG test.

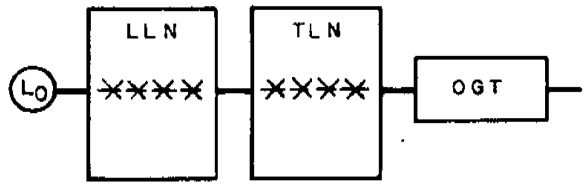

B. TALKING

Outpulsing register is loaded with information identifying reserved path.

Outpulsing takes place.

CC loads a POB with orders (a) to release the CDPR, the transmitter and the associated paths, and (b) to establish the reserved path between L_0 and OGT.

The senior and junior originating and outpulsing registers are released.

When answer is detected, the busy idle bits of trunk are marked to indicate talking.

100-msec trunk scan supervises for disconnect.

Figure 9-80 Summary of Outgoing Call Including Network Connections

D. INCOMING CALL

It is assumed that the system is processing an incoming call to an individual line.

During the 100-msec supervisory scan of trunks, when CC reads the row containing the scanpoint of the incoming trunk, it detects a mismatch between the scanner reading and the associated trunk Busy-idle word. The latter records the

TCI Library: www.telephonecollectors.info

previous scanner reading for that row. Among other things, the trunk scan supervises for incoming trunk seizures as well as outgoing trunk answers. Thus, CC cannot conclude from the mismatch whether a seizure or an answer has been detected. The trunk scanner number (TSN) of the trunk causing the mismatch is recorded in the trunk-service-request hopper because the trunk change is from on-hook to off-hook.

Milliseconds later, the TSN is taken from the hopper and converted to a unique program store address. The translation information stored there indicates that the trunk is incoming (which means that a seizure has been detected). It also specifies the TNN which identifies the network location of the trunk.

The CC seizes an incoming register (IR) and records in it the TNN. The CC converts the TNN into the program store address of the translation information for the trunk. This information is used by CC to determine the type of digit receiver (mf, dp, etc.) to be connected to the trunk, the number of digits to be received, and the type of supervision required. This information is recorded in the incoming register.

Knowing the type of digit receiver to be used, CC seizes an idle receiver and searches the network map for a path between the incoming trunk and the receiver. It loads a POB with the orders for the network controllers, the signal distributor, and the scanner to effect and check the connection. The path information is recorded into the IR.

The junior incoming register associated with the digit receiver is prepared to store the pulse count. The trunk circuit is put in the by-pass state and the start-dialing signal is transmitted to the distant office, which in turn transmits the last four digits of the called line's directory number (Figure 9-81A).

Upon completion of each digit, the pulse count is taken from the junior incoming register and via a digit hopper, is recorded in the IR that is administering the call. When the last digit is completed, the digits received are converted to the program store address of the directory number translation for the called line. A part of the translation is the line equipment number for the called line. The CC converts this LEN to the location of the line's busy-idle bit in the CS. This bit tells CC that the called line is idle. The ringing phase of the call starts as CC seizes a ringing register (RR) and then a POB. The incoming register is released.

TCI Library: www.telephonecollectors.info

A search of the network map results in the selection of a path from the incoming trunk to an audible ring tone circuit and from a ringing circuit to the called line; also a talking path between the incoming trunk and the called line is reserved. The information for all these paths is stored in the ringing register. The orders for the ringing connections are loaded into the POB (Figure 9-81B) with the signal distributor and scanner orders for a power cross test and a pretrip test.

Every 100-msec, the ringing circuit is scanned for answer. The incoming trunk is scanned for a possible abandonment.

When the called customer answers, ringing is automatically tripped by the ringing circuit. The ringing connections and the ringing register are released by CC. Answer supervision is returned to the originating office. The preiously reserved talking path is established (Figure 9-81C); the temporary memory is brought up to date. The connection is now supervised via the trunk scanner for disconnect.

When the 100-msec trunk supervisory scan detects a change to on-hook on either the line or trunk side of the incoming trunk, the system starts hit timing (200 to 300 msec).

After the hit timing period, a disconnect register is seized. If the distant end has disconnected first, the trunk is made available for reseizure and a timed-release period of 10 to 11 seconds is started. During this time, the No. 1 ESS customer is being scanned at the trunk every 100 msec for disconnect. The connection is released when the No. 1 ESS customer disconnects or the timed-release period ends. Should the trunk be reseized in the meantime, the connection would be released immediately and the line would be supervised via the line scanner. If the No. 1 ESS customer remains off-hook beyond the timed-release period, the off-hook is treated as a new origination.

If the No. 1 ESS customer has disconnected first, when hit timing is completed, the distant office is notified of the disconnect. Then the No. 1 ESS starts timing a period of 35 to 45 seconds, waiting for the disconnect signal from the distant office. When the No. 1 ESS receives the disconnect signal or when the timing period ends, the connection is released. Figure 9-81 summarizes the description of an incoming call.

TCI Library: www.telephonecollectors.info

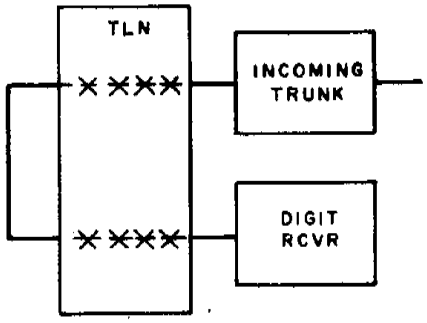

A. DIGIT RECEPTION PHASE

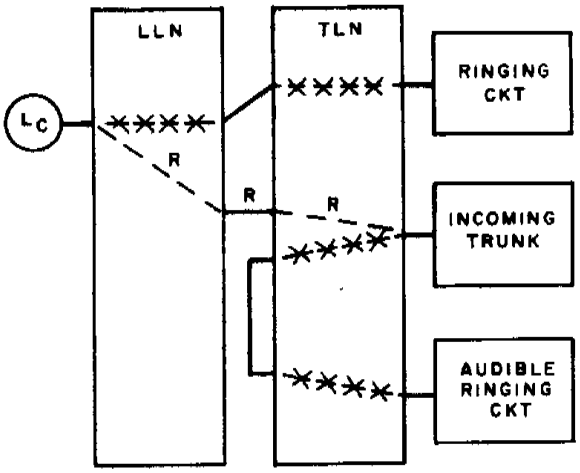

B. RINGING PHASE

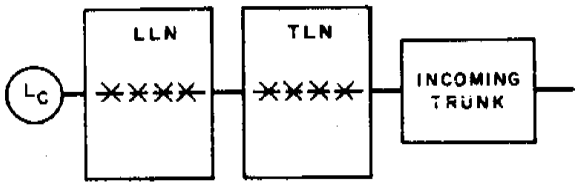

C. TALKING PHASE

Translation of TSN identifies trunk as incoming, specifies its TNN.

CC hunts for and seizes an idle IR.

TNN is translated to the type of digit receiver (DR) and the number of digits to be expected

CC hunts for and seizes an idle digit receiver.

CC hunts for a path in network map from incoming trunk to DR.

CC requests the connection of the path by loading a POB with the necessary orders (Fig. A).

CC stores the TNN translation in IR.

Start-dialing signal is sent to distant office.

Junior IR is initialized

After the fourth digit is detected, the four digits are used to determine the LEN of the called line L_C.

CC finds that L_C is idle from its busy-idle bit and seizes a RR. The junior and senior IR's are released.

CC loads a POB with orders to connect ringing and reserve a talking path (Fig. B).

When answer is detected, talking connection is established, (Fig. C).

The RR is released

Figure 9-81 Incoming Call Including Network Connection

TCI Library: www.telephonecollectors.info

E. REVERTING CALL

A reverting call is a call between two customers who share the same line. Thus, both customers have the same line equipment number.

The system processes the call as a regular intraoffice call until it receives all seven digits and finds that the calling and called LEN's are the same. It knows then that a reverting call is in progress. Thereafter, the call is handled in one of the following ways, depending upon the option selected by the telephone company.

1. Operator Assistance

For flat or message rate customers, the call is routed to an operator over a recording-completing trunk. The operator recognizes that she must assist in the completion of a reverting call from the trunk group or from the reception of identification tone. She then requests the called number from the calling customer and instructs him to hang up, to wait long enough for the called party to answer, and then to go off-hook again. In the meantime, she dials the called number over a local toll switching trunk and when the ringing connection is set up, ringing is applied under her control. She makes sure that the call is terminated properly before making out the message rate ticket or leaving the call. Throughout the conversation, the call is supervised via the local toll switching trunk. After both parties disconnect, the connection is taken down and the trunk is released.

a. 2-Party Selective, 4-Party Semiselective, Divided Code Ringing

The system returns busy tone until the calling customer hangs up. The busy tone is removed and reverting ringing is connected. When any customer on the party line removes his receiver from the switchhook, ringing is removed and a talking connection is established to a holding trunk. When both customers hang up and the disconnect is detected at the holding trunk, disconnect timing is completed and the connection is released.

TCI Library: www.telephonecollectors.info

b. 2-Party Selective, 4-Party Full Selective, 8-Party Semiselective Ringing

The system returns special high tone to the calling customer as a request to dial an additional digit that will identify his station and therefore his ringing code.

Having received the eighth digit, the system removes the high tone and returns busy tone to the calling customer. When the calling customer hangs up, the system removes the busy tone and connects ringing to the calling and called stations. If the calling and called stations are on the same side of the line and have the same polarity, only the called line's ringing code is applied. In other cases reverting ringing is returned to the calling station.

F. ASSISTANCE, SERVICE CODE, AND DIRECT DISTANCE DIALING CALLS

Assistance, service code, and direct distance dialing (DDD) calls are handled like outgoing calls. A translation of the dialed digit(s) tells CC:

(a) The type of trunk required to complete the call.

(b) The kind of supervision the trunk requires.

(c) Whether or not outpulsing is required.

Outpulsing is required for DDD calls and when operator switchboard positions are reached through another office.

1. Assistance Calls

After the first digit is translated and CC knows that the customer has dialed a zero, an operator trunk is seized. Audible ringing tone is sent to the customer until the operator answers. When the operator answers, a talking connection is established. Both the operator and the customer must disconnect before the connection is released.

TCI Library: www.telephonecollectors.info

2. Service Code Calls

Calls to a service code operator (long distance, repair service, etc.) follow a pattern similar to that of assistance calls. A translation of the dialed digits informs CC how to terminate the call. Audible ringing tone is sent to the customer and a lamp signal to the operator. The audible ringing connection is released and the talking connection is established when the operator answers. The talking connection is released when the customer disconnects.

3. Direct Distance Dialed Calls

A translation of the area code digits plus the office code if necessary, tells CC how to terminate the call. CC selects the proper trunk and outpulses the proper digits.

4. Manual Calls

A dial office may serve manual customers who require the assistance of an operator on all originating calls. When a manual customer goes off-hook, the LEN translation informs CC that this is a manual service line. A digit receiver is connected to the line but dial tone is not applied. The transfer of supervision is checked and the FCG and power-cross tests are made in the usual manner. The digit receiver is then released. Via an operator trunk, a connection is established to an operator as though the customer had dialed "O". The operator completes the call as requested by the customer.

G. SPECIAL SERVICES

Some of the special services available to No. 1 ESS customers are:

1. Abbreviated dialing
2. Add-on
3. Dial conference
4. Variable transfer
5. Preset transfer

TCI Library: www.telephonecollectors.info

Two of the special services - dial conference and add-on - use a flash of the switch-hook while a conversation is in progress as an alert to the system to prepare for a customer request. The system detects the flash as part of the normal supervisory scan for disconnect. After hit timing has been completed and CC has determined from a bit in the path memory that the customer has the "flash privilege," CC times an interval ranging from 200 msec to 1.2 seconds. If the on-hook signal is longer than 1.2 seconds, it is treated as a disconnect signal. If it is shorter than 1.2 seconds, the proper service actions are taken.

1. Abbreviated Dialing

This service allows a customer to place calls to frequently called numbers by dialing an abbreviated code instead of the usual seven or more digits.

The customer goes off-hook, receives dial tone, and dials or keys the prefix 11. (Customers with TOUCH-TONE Calling may have an eleventh button to obviate the need for the 11 prefix.) The LEN translation tells CC which special services the customer is entitled to. The 11 prefix tells CC that the customer is going to use his abbreviated dial service and that only one or two more digits are to be expected. A list of directory numbers assigned by the subscribing customer is stored in the PS memory. CC uses the dialed digits(s) to determine from the list the directory number of the called line. The maximum number of abbreviated codes for a list is 32. Customers are assigned 1-digit abbreviations for repertories of up to ten numbers; 2-digit abbreviations for repertories of 11 to 32 numbers. A customer wishing to add, delete, or change his abbreviated dial list must contact the telephone company business office to arrange for the changes.

2. Add-On Service

This service allows a No. 1 ESS customer A who is talking to customer B to add another party, C, to the call. Customer A alerts the system by a flash of his switchhook. The established connection is released but party B is still supervised by the junctor or trunk to which he was connected. Customer A is connected to a digit receiver. He receives a special dial tone and then dials the add-on digit 2, followed by the directory number or, if he has abbreviated dial service, the abbreviated dial code

TCI Library: www.telephonecollectors.info

of the line to be added. Customers A and B are then connected to a conference circuit (see Figure 9-82). Both parties hear audible ring, busy, or reorder tone depending upon the state of the line to be added. When customer C answers, all three customers can converse via the conference circuit. Only one toll connection is permitted to a conference circuit.

To remove the third party from the connection, whether or not he has answered, customer A alerts the system by a switchhook flash, receives dial tone, and dials the cancel digit 3. The system tries to set up a regular talking path after having released the conference circuit. Customers A and B remain connected together via the conference circuit, if traffic conditions do not permit the establishment of a new talking path. A new party may be added as previously described. The conference connection is released when customer A hangs up. An AMA record is kept for each usage of the conference circuit, and for each leg of the conference circuit that is used.

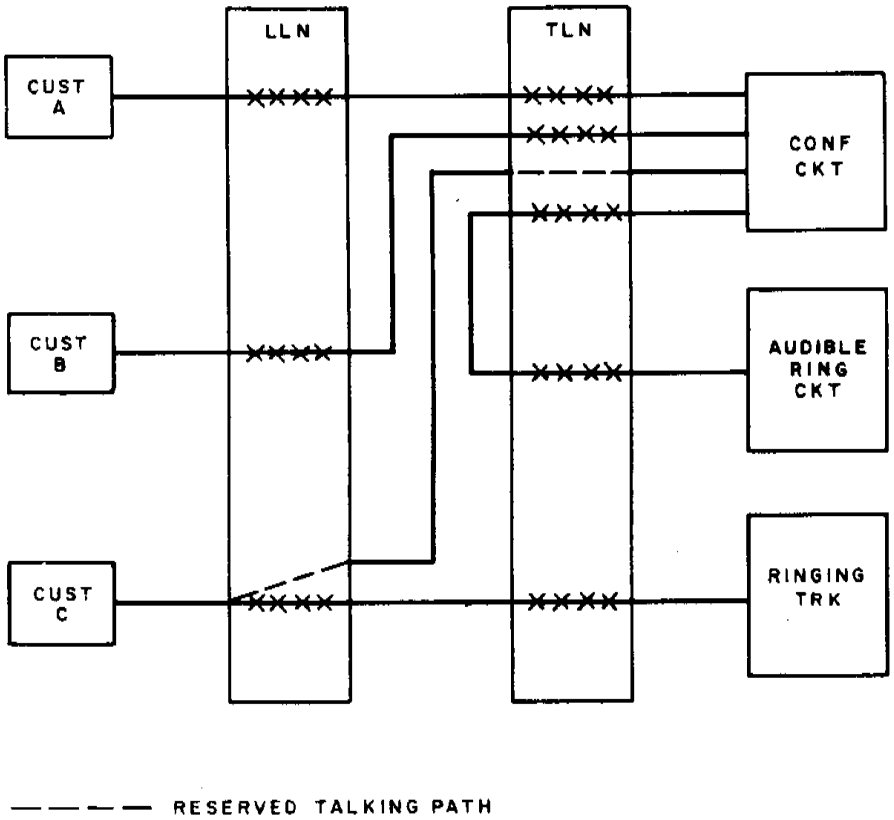

Figure 9-82 Network Connections for Add-On Service Connections

TCI Library: www.telephonecollectors.info

3. Dial Conference Circuit

This service allows a customer to establish a conference call without operator assistance. He initiates this service by dialing the conference service access code, which is an abbreviated code. The conference service code tells the system to reserve a conference circuit for the customer. The customer remains connected to the digit receiver, receives dial tone, and dials the add-on digit 2, followed by the directory number of the first conferee. A connection is established between the originating customer and the first conferee via a conference circuit. To add an additional conferee, the customer alerts the system with a switchhook flash, receives dial tone, and dials 2 and the directory number. The dial conference circuit is limited to one originating customer and three conferees (see Figure 9-83). Only one leg of a conference circuit can be connected to toll facilities. To remove the last leg added to the call, the customer alerts the system with a switchhook flash, receives dial tone, and dials the cancel digit 3. Parties previously connected cannot be released by the originating station. All connections are released when the originating customer hangs up. The AMA record includes the time and directory number for each chargeable leg, the total conference circuit usage time, and the maximum number of legs used.

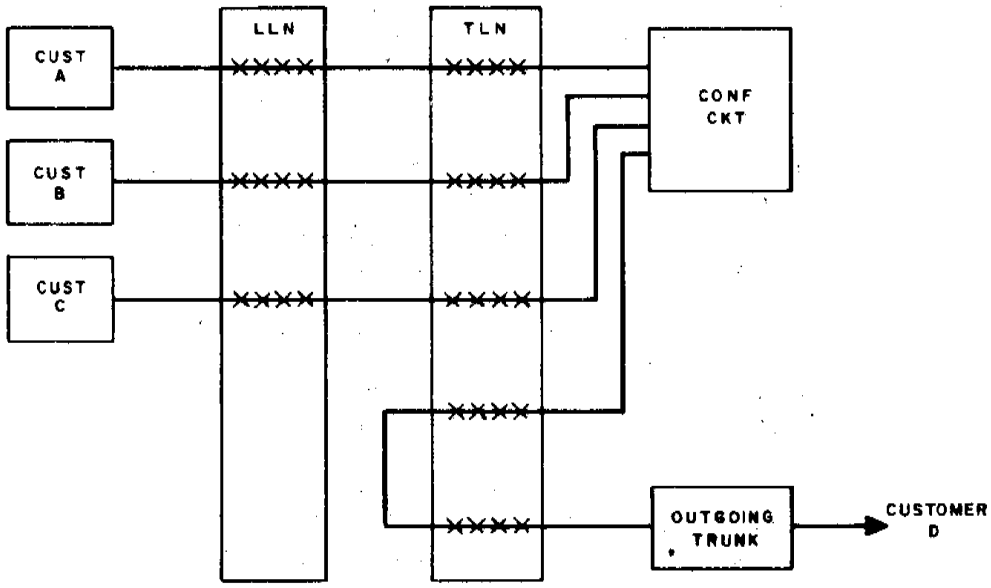

Figure 9-83 Network Connections for Dial Conference Call

TCI Library: www.telephonecollectors.info

4. Variable Transfer

This service allows a customer to have all incoming calls to his base station transferred to a remote station designated by him. To initiate this service, the customer goes off-hook, receives dial tone, and dials an activate code. He receives dial tone again and dials the directory number of the remote station. The customer hears a confirmation tone. The call is then completed to the remote station in the normal manner. The service is activated when the remote station answers. The system, however, can activate the service even though the remote station does not answer, if the program for that office includes this feature. The base station is still able to originate calls regardless of the state of the remote station.

To deactivate this service, the customer dials the deactivate code from the base station, receives the confirmation tone, and hangs up. Subsequent incoming calls will ring only the base station.

5. Preset Transfer

This service allows a customer to have all incoming calls to his base station transferred to any one of eight previously selected remote stations. The restrictions on the location of the remote station are the same as for the variable transfer service. Any additions, deletions, or changes in the list of remote stations are handled through the telephone company business office.

To initiate the service, the customer goes off-hook, receives dial tone, and dials an activate code. He receives dial tone again and dials one digit to designate the station to which he wants his calls transferred. The customer hears a confirmation tone. The call is then completed to the remote station in the normal manner. The service is activated upon completion of dialing regardless of whether the remote station has answered.

To deactivate the service, the customer dials a deactivate code from the base station, receives the confirmation tone, and hangs up.

TCI Library: www.telephonecollectors.info

H. TRAFFIC, ADMINISTRATION AND TEST FEATURES

1. Service Observing

Service observations of customer lines are used to determine the quality of service given by a telephone office. A service observing "shoe" is placed on a customer line at the MDF to connect the line to service observing equipment. A temporary translation is typed in at the maintenance teletypewriter to indicate that the line is to be service observed. The operator releases her connection after she has determined how well the office has performed on the call. Service observations of PBX lines are made to appraise the actions of attendants on terminating calls. In this case the operator connection is made to the attendant's PBX trunk after the directory number translation is made.

2. Call Tracing

Calls are traced by the No. 1 ESS for one of two reasons:

(a) The directory number translation indicates that all calls to a line should be traced.

(b) A request has been made via the teletypewriter to trace a call in progress to a specified line.

For each call to a line whose DN translation specifies call tracing, the system gives a printout that identifies either the local directory number or the incoming trunk from which the call was originaged. For a trace requested via the teletypewriter, the system determines from the path memory in the CS the line or trunk at the other end of the connection. The system prints out the identity of the line or trunk connected to the line being traced.

3. Traffic Measurements

Many items of traffic data are gathered by the No. 1 ESS in the form of counts which are kept in CS traffic registers. These counts are obtained through the joint actions of call processing programs and a traffic measurement program. The call processing programs increment or otherwise update

TCI Library: www.telephonecollectors.info

appropriate counters as events occur during call processing. The traffic measurement program uses the counters of the traffic registers to prepare the traffic data for final output. Most traffic data reflect the busy-hour use of the office equipment. Counts in this category are collected on a regular busy-hour schedule five days a week. Some counts are used to indicate overload conditions and are collected only when an overload exists. Data that are required only occasionally are collected only upon request by teletypewriter. Traffic data will be transmitted upon request to a traffic data processing center via DTWX and/or printed at local or remote traffic teletypewriter installations.

4. Emergency Manual Service

Even when the system is partially or completely inoperative, certain important customers must be provided with originating and terminating service. Each of these customer lines is terminated at an emergency manual line circuit which normally connects the line to a line switch frame. Under abnormal conditions, this circuit connects the line to a distant or local switchboard. This office feature is controlled by a guarded key at the MCC and, if required, by keys at a remote location.

5. Service Order Facilities

Recent change registers in the temporary memory are used to record service order changes, additions and deletions for lines and trunks. The service order number and the associated data are transmitted to the system via a teletypewriter. The data is recorded in a recent change register and is indexed by the service order number. To make a service order effective, an operating company employee dials an appropriate code followed by the service order number.

TCI Library: www.telephonecollectors.info

CHAPTER 10

4A TOLL SWITCHING SYSTEM

10.1 INTRODUCTION

The growth of toll traffic within the Bell System during the past thirty years has been amazing. In an attempt to keep abreast of this growth, provide new and better facilities, and at the same time obtain maximum use of existing facilities, the No. 4 Toll Switching System was designed.

The No. 4 Toll Switching System, of which the 4A is the latest model, is a four wire system, using one pair of wires for transmitting and one pair for receiving. All switching is done mechanically. The No. 4A Toll Switching System was designed to serve as a Control Switching Point (CSP) in the switching of intertoll traffic on a nation-wide basis. However, until the ultimate goal in FACD, or Foreign Area Customer Dialing is attained, operator assistance will be necessary at some points.

The No. 4A Toll Switching System is capable of handling switching between points using either a 3-digit central office code, or a 6-digit code including both the Numbering Plan Area (NPA) and the local area office codes. It has provisions for translating the full 6-digit code for selection of the correct route where more than one route exists to another NPA. It has features capable of varying the number of digits sent to the distant office and in some cases substituting other code digits when passing all or part of the full 6-digit code to a distant point. Another feature is the alternate routing of traffic when the first choice high usage group is busy. Under certain circumstances as many as seven different routes from one CSP can be tested in a search for an idle path.

From the old method of calling "Long Distance" to leave the name of the called party and waiting from 15 minutes to several hours to get the connection to the present method of dialing directly to the called party covers many years of research and development in the field of telephone system communications.

TCI Library: www.telephonecollectors.info

10.2 TOLL SWITCHING SYSTEM

The 4A Toll Switching System is a part of the Nationwide Toll Dialing Plan for operator and customer dialing of toll calls. The plan provides for long-distance operators or customers to dial or key the information for routing a call. The switching equipment then automatically completes the call.

Figure 10-1 shows the relationship of the 4A Toll Switching System to the Toll Switching Plan.

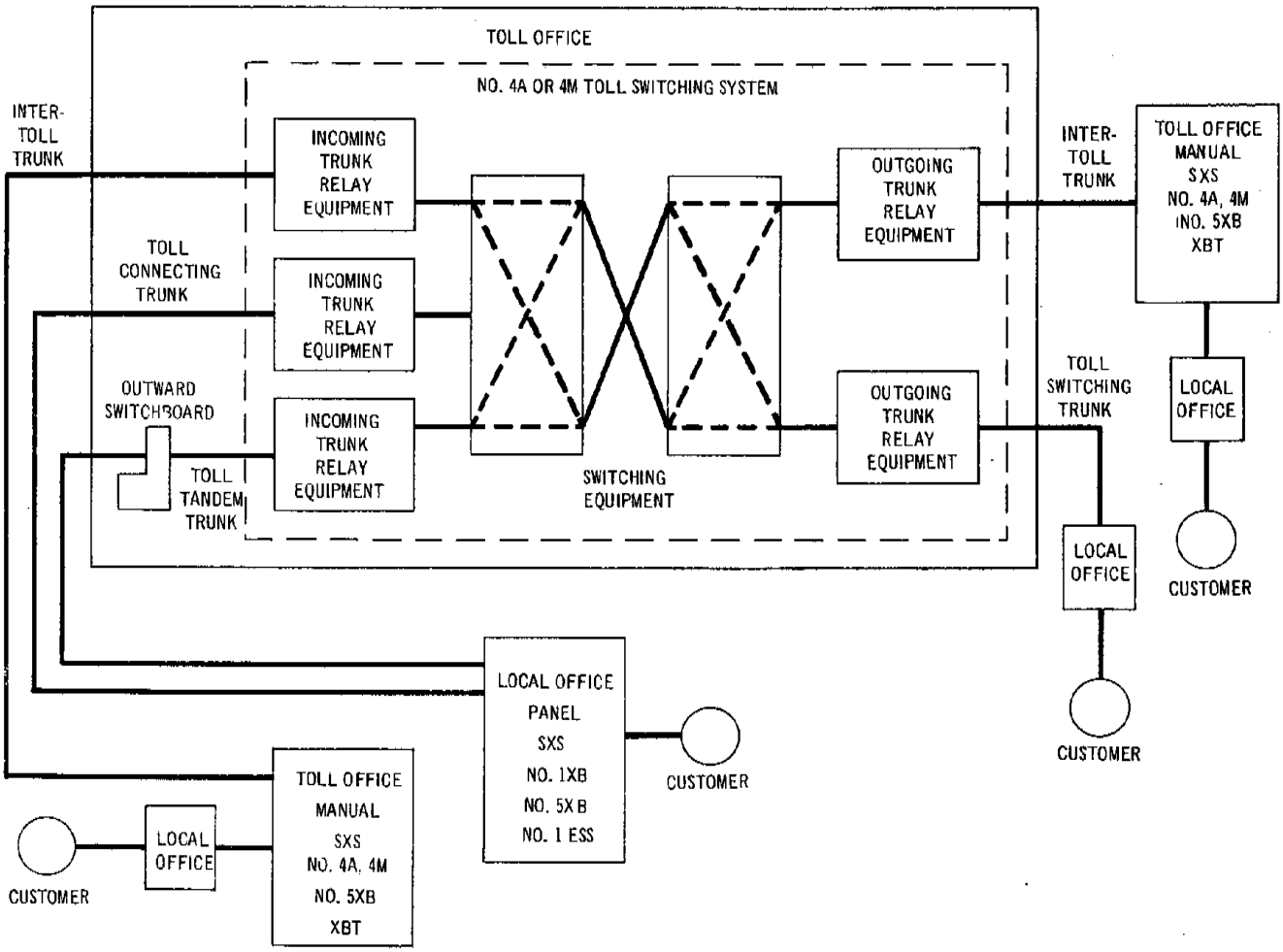

Figure 10-1 - Relationship of 4A Toll Switching Systems to General Toll Switching Plan

TCI Library: www.telephonecollectors.info

A. SWITCHING PLAN

Crossbar switches arranged on incoming and outgoing link frames, and common control equipment provides 4-wire paths for establishing connections mechanically between intertoll trunks, tandem and intertoll trunks, and intertoll and toll switching or miscellaneous terminating trunks. Common control equipment consisting of markers, senders, decoders, card translators, link controllers, and trunk block connectors will set up the switching paths and receive and send, as necessary, the pulsing and signaling information required for completion of a call. The relationship of the link frames and the common control equipment is shown in Figure 10-2.

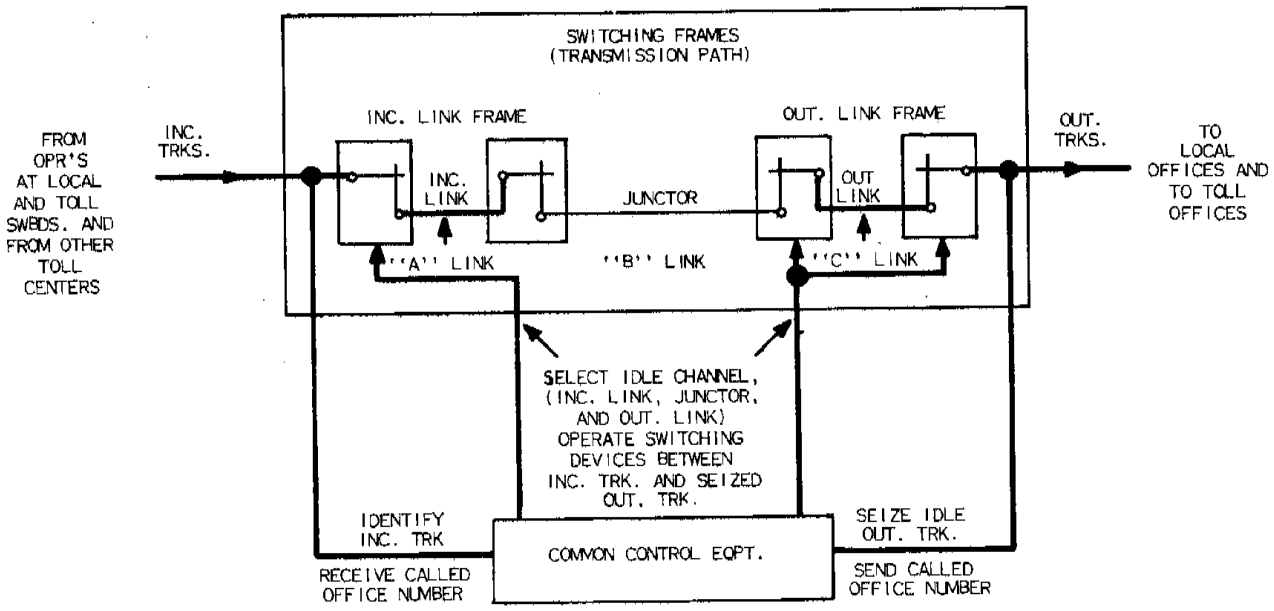

Figure 10-2 - Relationship Between Common Control Equipment and Switching Frames

TCI Library: www.telephonecollectors.info

Common control means that the switches in the talking connections are set up by certain equipment units which are common to many of the switching frames in the office. A common control system has the ability to store and reuse digits. Other common control circuits associated with the CAMA portion of the 4A system are: transverters, billing indexers, recorders, position link controllers, and master timers which are not discussed in this section.

The marker is one of the major control units of the common control equipment. One of its functions is to make sure that there is an idle outgoing trunk available before attempting to set up a talking connection.

The common control equipment is used on each call only long enough to set up a talking connection, after which it releases and is ready to serve another call. In this manner a few units of complicated equipment are used for short periods of time to set up the switches for a proportionately large number of calls.

1. 4-Wire Talking Path

The 4A system is a 4-wire transmission system. This means that two voice paths per trunk are provided through the switches - one for each direction of transmission.

The 4-wire transmission system eliminates a need to convert 2-wire trunks to 4-wire and back to 2-wire for voice repeaters and also eliminates the undesirable transmission effects caused by these conversions.

A conversion from 4-wires is still required, however, when connecting to a 2-wire office. This would be at the originating and terminating ends, so that the call can be switched through local automatic switching equipment or via a switchboard to the customer.

The 4A system starts with the trunk relay equipment on the incoming intertoll or incoming toll connecting trunks, and ends with the trunk relay equipment on the outgoing intertoll or toll switching trunk.

Calls arriving at the 4A toll office may have been originated by an operator or customer. As there is no incoming class indication used by

TCI Library: www.telephonecollectors.info

these systems, the equipment can not differentiate between operator and customer calls. Incoming calls with a few exceptions are routed from the digital information alone.

After the number has been registered, the No. 4A system automatically takes over. A route that can complete to the terminating local office is selected, routing information is transmitted to the distant toll office and the call is then completed.

2. Nationwide Dialing Requirements

Nationwide dialing requires that calls be switched on a destination basis rather than on a trunk route basis. To route calls on a destination basis requires in some cases that the 4A system be able to examine and use (translate) six ditits.

Another requirement of nationwide dialing is automatic alternate routing. With manual toll switching, if a toll operator finds all the trunks busy on a given route to a distant city, she can select other alternate routes over which the call can be completed. 4A systems have the ability to automatically scan rapidly and select a route from several alternates in its attempts to establish a connection. The 4A system automatically checks the preferred route and as many as five alternate routes in rapid succession, although the actual use of five subsequent choices is not typical.

To complete some calls, it is necessary to delete or to change the area or national office code digits, dialed or keyed by the operator or customer before the number is pulsed to the next office. This is done by the use of the variable spilling and code conversion features. Either one or both of these features may be used on a given toll call. With variable spilling, all the code digits can be spilled forward or some of them can be skipped and the remaining digits spilled forward. Three or six digits may be skipped. The code conversion feature makes it possible to change one or as many as three consecutive digits to different numerals before they are spilled forward. In addition, one, two, or three digits can be prefixed as required before spilling.

TCI Library: www.telephonecollectors.info

B. NO. 4A TOLL SWITCHING EQUIPMENT

The equipment used in the No. 4A Toll Swtiching System can be divided into the following groups:

Switching Equipment
Sender Link Frames
Common Control Equipment
Trunk and Traffic Equipment
Maintenance Center Equipment

Two arrangements of equipment are provided for the No. 4A System, one with a single train for smaller offices where the number of incoming or outgoing frames will not exceed forty, and the other with two trains each having this capacity. The single train arrangement handles both intertoll and toll completing traffic with a maximum of ten markers and ten decoders. Such an office is called a "Combined Train Office" and is shown in Figure 10-3. The two train offices operate with a maximum of ten markers for each train and twenty-four common decoders and are called "Separate Train Offices - Combined Operation" to distinguish them from other two train offices used in the earlier No. 4 type toll switching systems. Figure 10-4 illustrates a call through a separate train office. In the 4A two train arrangement each train handles both intertoll and toll completing traffic with multiple appearances of all incoming trunks on the incoming link frames of both trains. The trains involve several arrangements which differ essentially in junctor distribution.

1. Incoming Links

An incoming link (A link) is a five wire interconnection between the primary and secondary switches of the incoming link frame. The incoming link frame is the first frame on which the talking paths terminate in a 4A Toll Switching Office. Ten 200 - point, 5 wire crossbar switches are mounted on a "Primary Bay" of each incoming link frame. 200 - point, 5 wire crossbar switches having split horizontals are mounted on a "Secondary Bay." One hundred incoming trunks, ten per switch, are connected to the horizontals of the primary switches, two hundred junctors, twenty per switch, are connected to the verticals of the secondary switches.

TCI Library: www.telephonecollectors.info

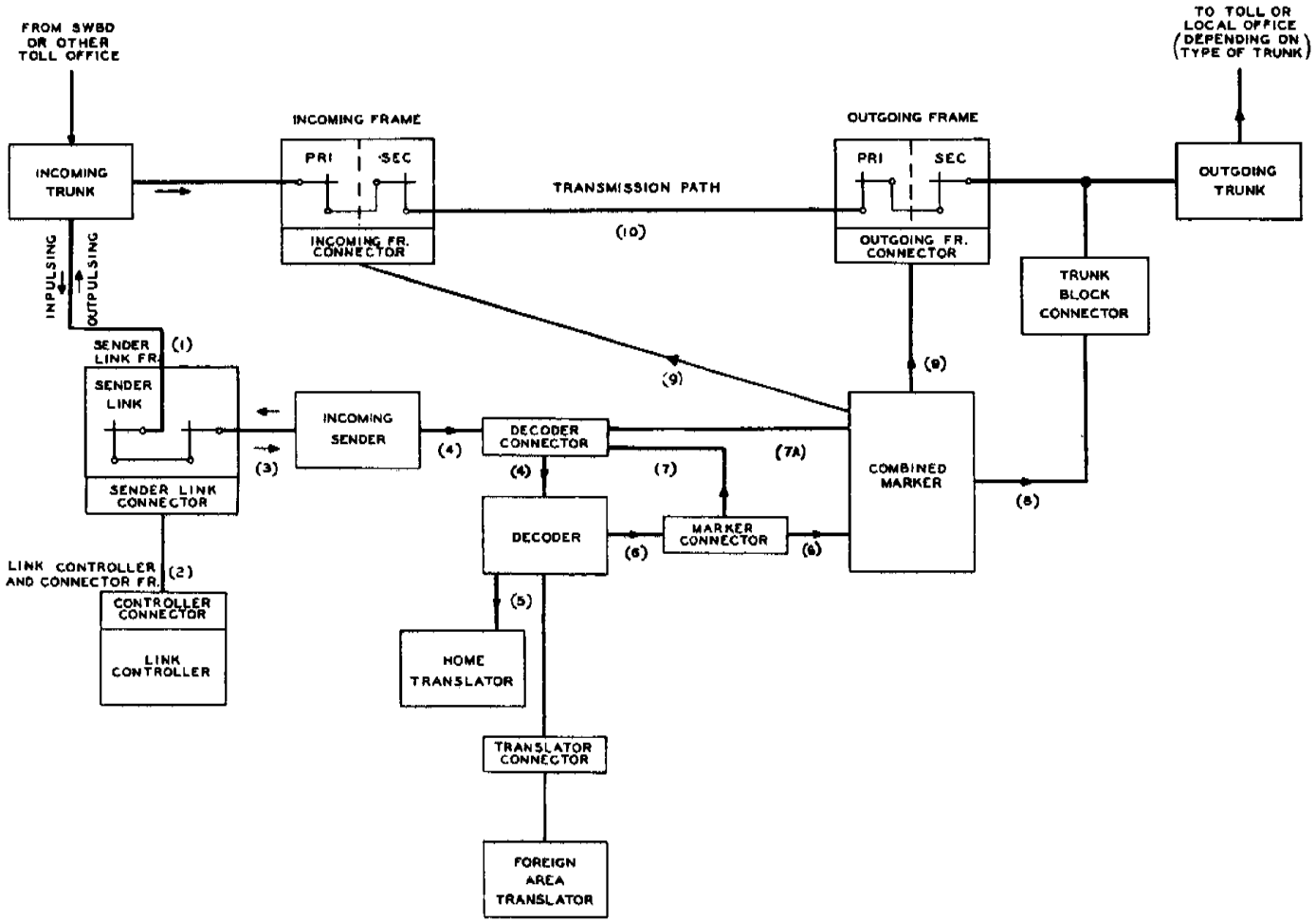

Figure 10-3 - Call Through a Combined Train Office

TCI Library: www.telephonecollectors.info

TCI Library: www.telephonecollectors.info

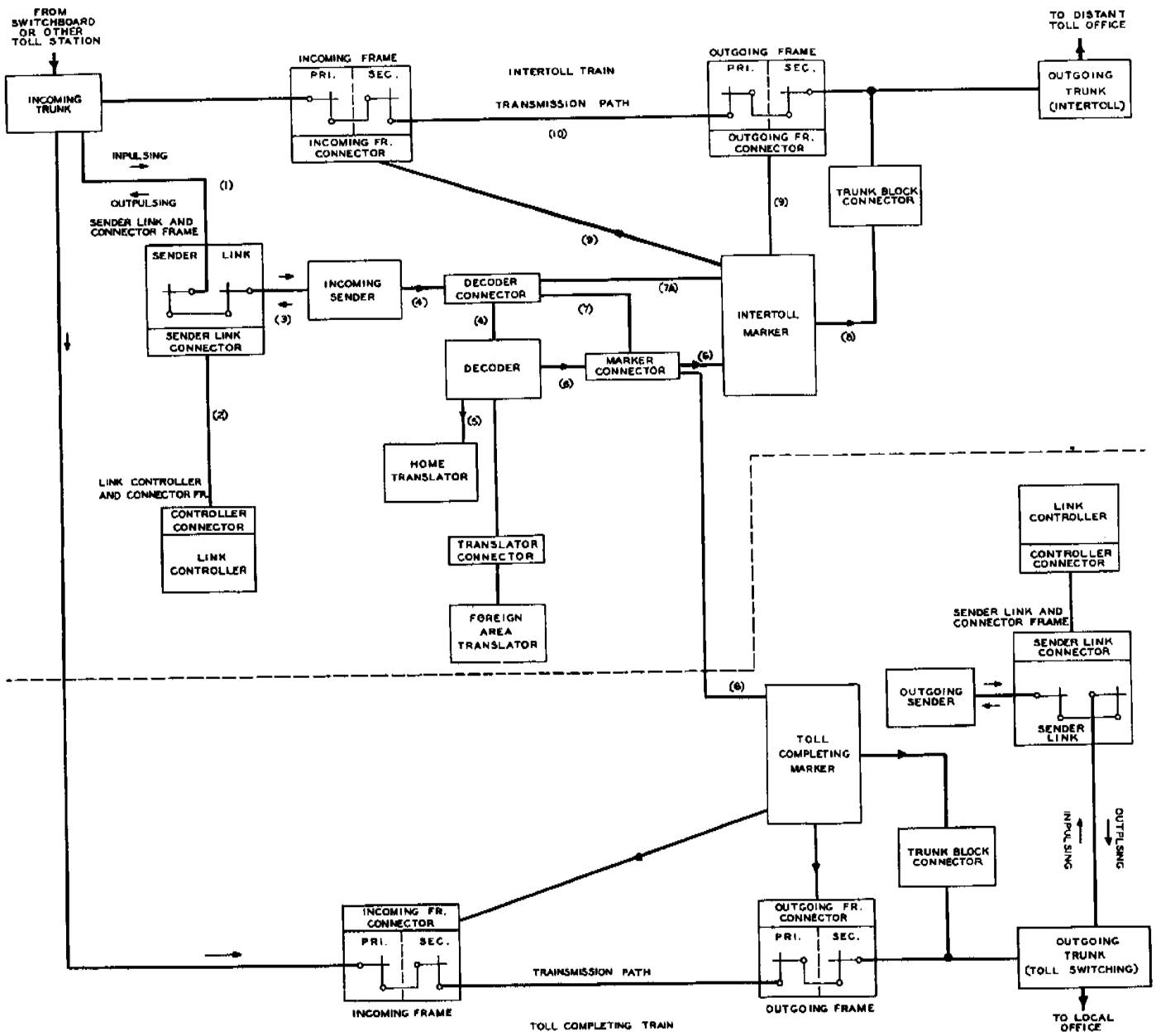

Figure 10-4 - Call Through a Separate Train Office

TCI Library: www.telephonecollectors.info

TCI Library: www.telephonecollectors.info

Two hundred incoming or "A" lines are distributed over the secondary switches in accordance with a fixed pattern, as shown in Figure 10-5. This pattern is such that the twenty links from the verticals of any primary switch are evenly distributed over the ten secondary switches, two per switch. The left verticals of the primary switches always terminate on the left horizontals of the secondary switches and the right verticals of the primary switches always terminate on the right horizontals of the secondary switches. Thus, any of 100 incoming trunks has access to any of the 200 junctors.

Since an incoming link appears on a vertical of a primary half-switch and on a horizontal of a secondary half-switch, and "A" link may be traced in accordance with the following rule: The primary vertical number is the same as the secondary switch number on which it appears, and the primary switch number is the same as the secondary horizontal number. This arrangement of incoming links is known as a vertical-to-horizontal spread and obviates the necessity of providing designation strips for the tracing of incoming links.

2. Junctors

The junctors interconnect the verticals of the secondary switches of the incoming link frames and the verticals of the primary switches of the outgoing link frames. These junctors, which are 5 wire links, are also called "B" links. The respective crossbar switches each have 20 verticals, thereby providing termination for twenty junctors, or 200 junctors per frame.

Since any incoming trunk must have access to any outgoing trunk, the junctors are grouped and interlaced as shown in Figure 10-6. It will be seen that, with this arrangement, the 200 junctors on one incoming link frame must be divided into as many groups as there are outgoing frames. Each group must carry all of the traffic load from the trunks on one incoming link frame to the trunks on one outgoing link frame. Also, it should be observed that the number of junctors on an incoming link frame is equal to the number which appears on the outgoing link frame.

TCI Library: www.telephonecollectors.info

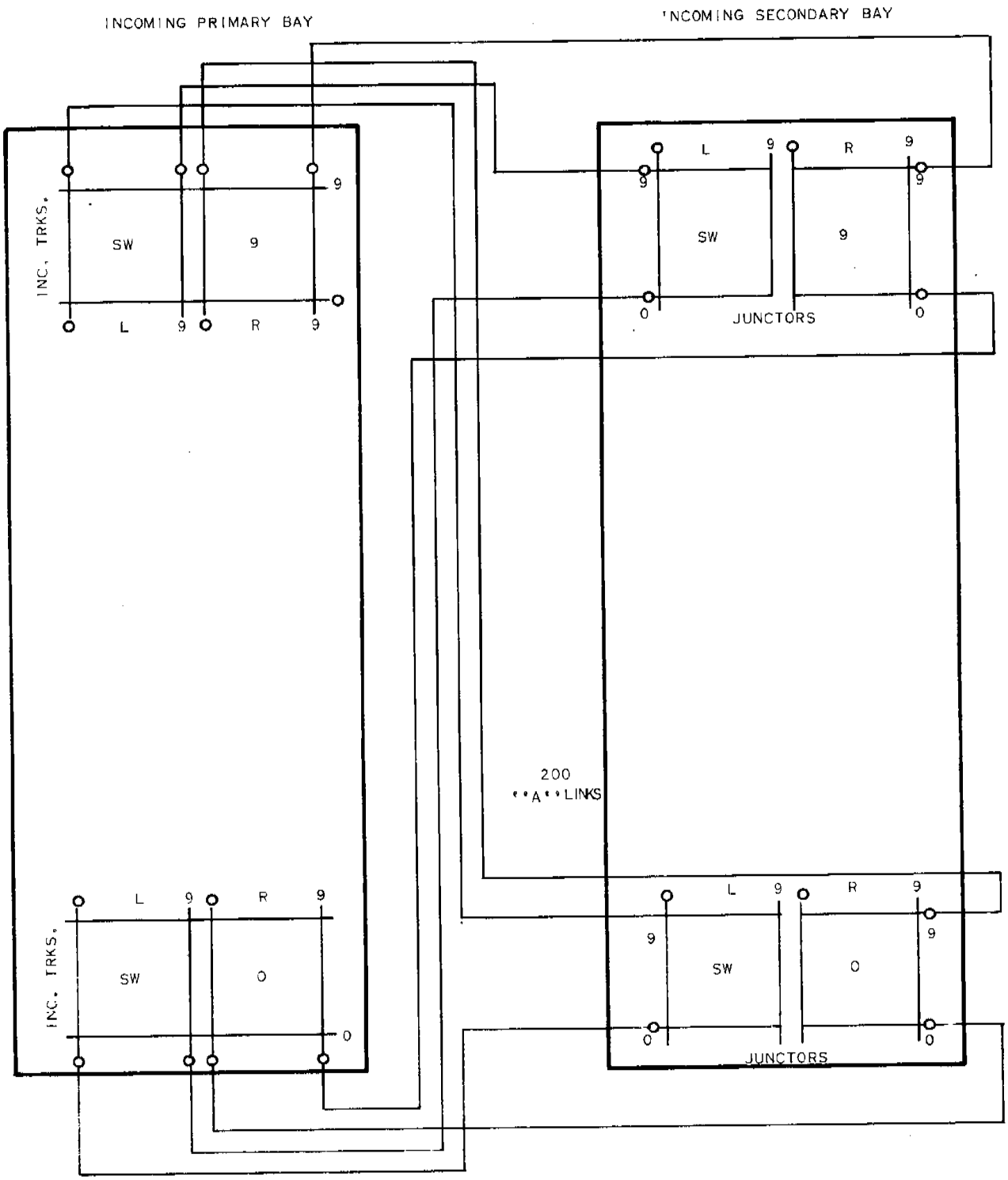

Figure 10-5 - Incoming Link Spread

TCI Library: www.telephonecollectors.info

As the number of incoming and outgoing link frames increases, the possible number of junctors between any two frames must decrease. That is, the size of each junctor group decreases due to the fact the fixed number of junctors on an incoming link frame is divided into as many groups as it has frames to reach. Example: If there are four incoming link frames and four outgoing link frames, then the 200 junctors from any incoming link frame must be divided into four groups consisting of 50 junctors per group; now if the office was increased to eight incoming link frames and eight outgoing link frames, then the 200 junctors from any incoming link frame must be divided into eight groups consisting of 25 junctors per frame.

Design provides that the number of junctors in a group must not be less than ten. This number is reached when the number of incoming link frames in an office reaches 20. For more than 20 frames an arrangement known as "pairing of frames" is employed. The incoming link frame capacity may be increased to 400 junctors by adding a secondary extension bay of ten 200 point 5 wire switches. These additional 200 verticals, thus obtained, together with the 200 verticals of the regular bay of secondary switches, provides terminations for 400 junctors. There are only 200 "A" links serving these 400 junctors, and in order to load them to their full capacity, the same 400 junctors multiple to like numbered verticals on secondary switches of another incoming link frame. The two frames which share the use of these 400 junctors are called an incoming group. The distribution of these 400 junctors of an incoming link frame group is shown in Figure 10-7.

3. Outgoing Link Frame

The outgoing link, or "C" link, is a five wire interconnection between the primary and secondary switches of the outgoing link frames. The outgoing link frame consists of ten 200 point 5 wire switches with split horizontals on the primary bay and ten 200 point 5 wire switches on the secondary bay. There are 200 junctors, with 20 junctors, appearing on the twenty verticals of each primary switch, ten on the left half and ten on the right half. The 200 "C" links are

TCI Library: www.telephonecollectors.info

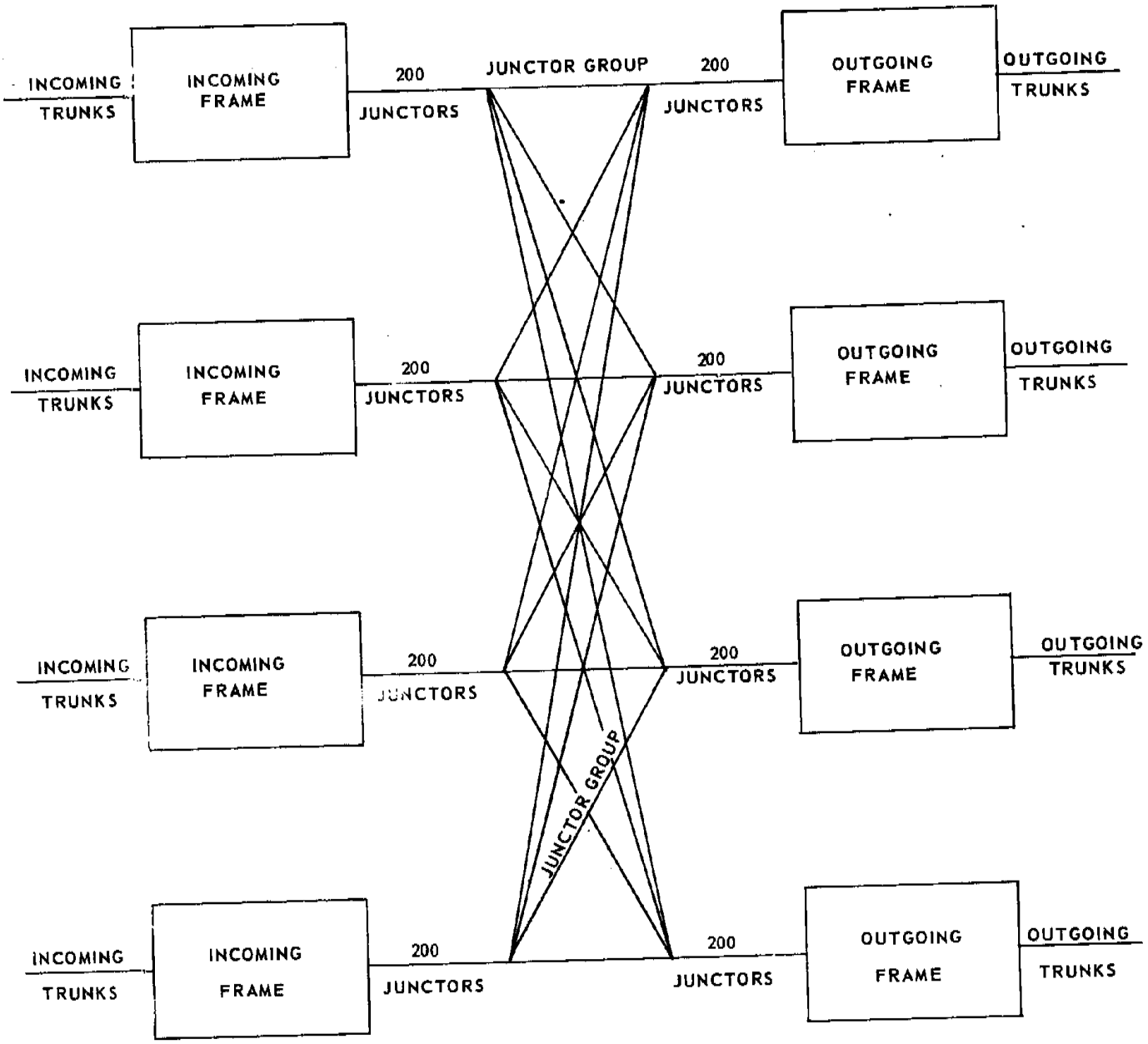

Figure 10-6 - Junctor Spread

TCI Library: www.telephonecollectors.info

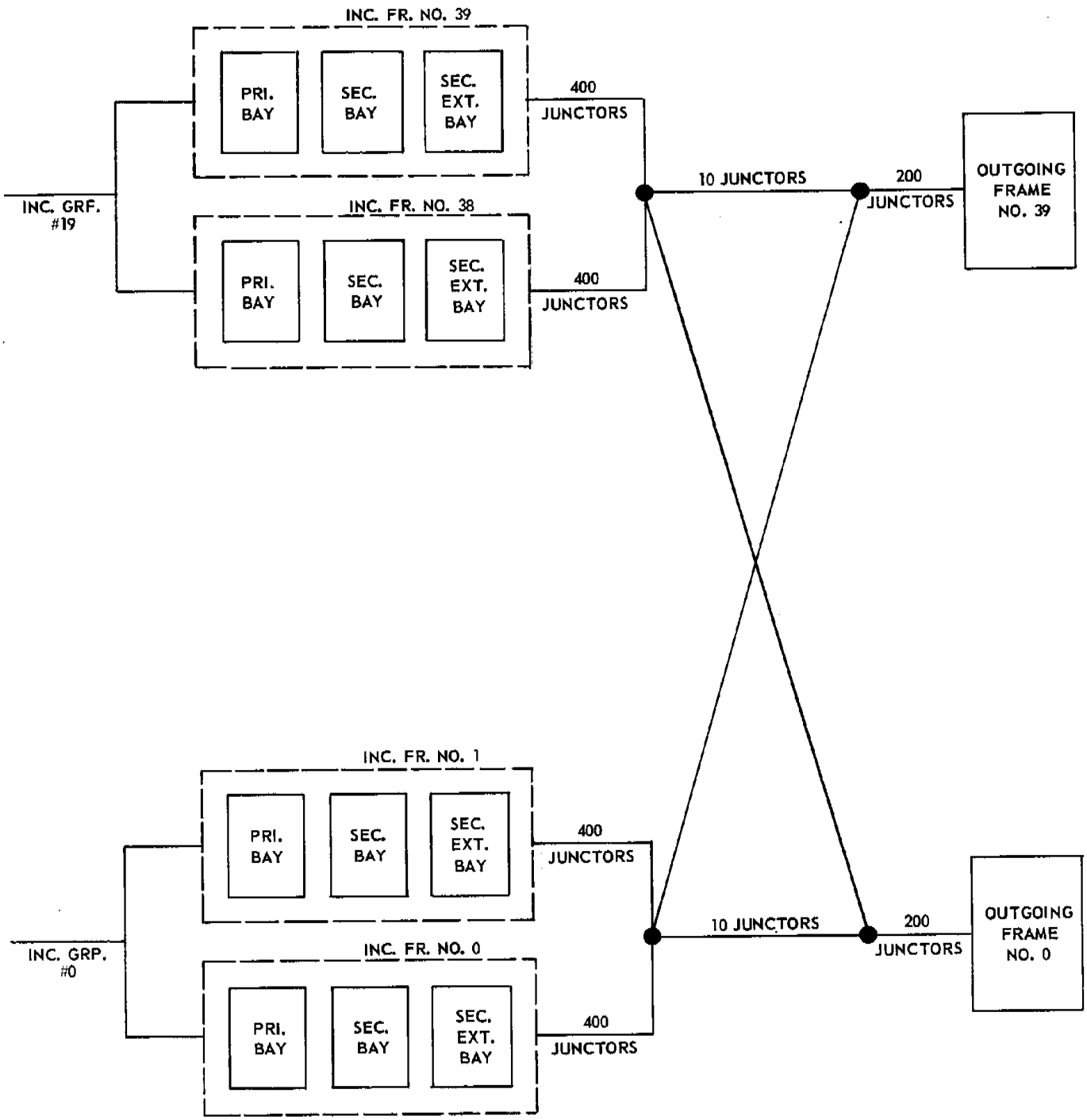

Figure 10-7 - Pairing of Incoming Frames

TCI Library: www.telephonecollectors.info

distributed over the secondary switches in a fixed pattern, as shown in Figure 10-8. This pattern is such that the 20 links from the horizontals of any primary switch are evenly distributed over the verticals of all ten secondary switches, two per switch.

One hundred outgoing trunks, ten per switch, appear on the horizontals of the secondary switches. Thus, any one of the 200 junctors has access to any one of the hundred outgoing trunks.

Since an outgoing link appears on a horizontal of a primary half-switch and on a vertical of a secondary half-switch, any "C" link may be traced in accordance with the following rule: The primary horizontal number will be the same as the secondary switch number on which it appears, and the primary switch number is the same as the vertical number on the secondary switch. This method of link distribution is known as a horizontal-to-vertical link spread. In addition, a horizontal on the left half of a primary switch is always connected to a vertical on the left half of a secondary switch, and a horizontal on the right half of a primary switch is always connected to a vertical on the right half of a secondary switch.

The outgoing link frames provide a means for terminating the talking paths of all outgoing trunks in a 4A office, whether to outgoing inter-toll trunks or to toll completing trunks. Through the office control equipment it can be assured that every outgoing trunk in the office is accessible to every incoming trunk.

4. Channels

A channel is a combination of an incoming or "A" link, a junctor or "B" link, and an outgoing or "C" link. This combination of links forms a chain, by means of crosspoint closures, that will connect an incoming trunk with an outgoing trunk. Each group of ten or more junctors connecting an incoming frame with an outgoing frame is spread at both ends over the ten junctor switches, the left and right halves and switch numbers being the same at both ends for each junctor. Considering a particular incoming trunk on an

TCI Library: www.telephonecollectors.info

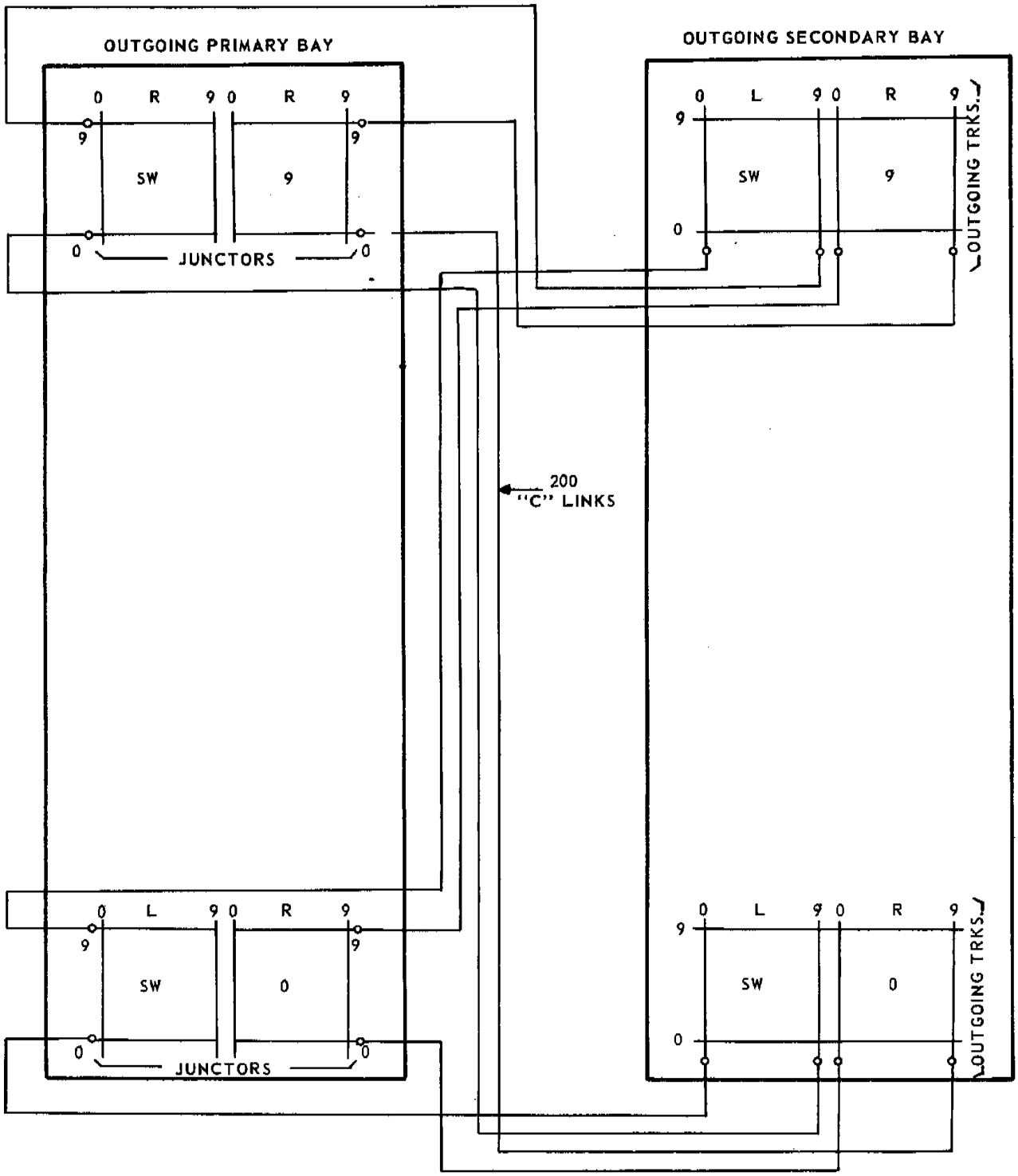

Figure 10-8 - "C" Link Distribution

TCI Library: www.telephonecollectors.info

incoming frame, there are twenty incoming or "A" links (10 left and 10 right) serving it. These are spread over the ten secondary switches of the incoming frame. Considering a particular outgoing trunk on an outgoing frame, there are twenty outgoing or "C" links (10 left and 10 right) serving it. These are also spread over the ten primary switches of the outgoing link frame. Thus between a particular incoming trunk and a particular outgoing trunk, there are ten or more channels available for connection. A diagram for channels is shown in Figure 10-9.

The channel number corresponds to the incoming primary vertical number on which the "A" link appears, to the incoming secondary switch number, to the outgoing primary switch number on which the "B" link appears, and to the outgoing secondary switch vertical number on which the "C" link appears. The channel number is thus an important association of equipment, for it facilitates tracing a connection from an incoming to an outgoing trunk.

5. Increasing Frame Capacity

Previously, only a primary bay which always has a capacity of 100 incoming trunks was mentioned, in order to simplify explanation of the switching principles. As can be seen, it would be uneconomical to provide only 100 trunks to have access to 200 links and 200 junctors. Therefore, a primary extension bay is always provided on incoming frames to increase the capacity to 200 incoming trunks. A second primary extension bay may be furnished where it is desired to increase the capacity to 300 incoming trunks. And similarly a third primary extension bay where it is desired to increase incoming trunk capacity to 400 trunks. The verticals of the primary bay are multipled to the verticals of each extension bay to share the use of the 200 "A" links, Figure 10-10a.

TCI Library: www.telephonecollectors.info

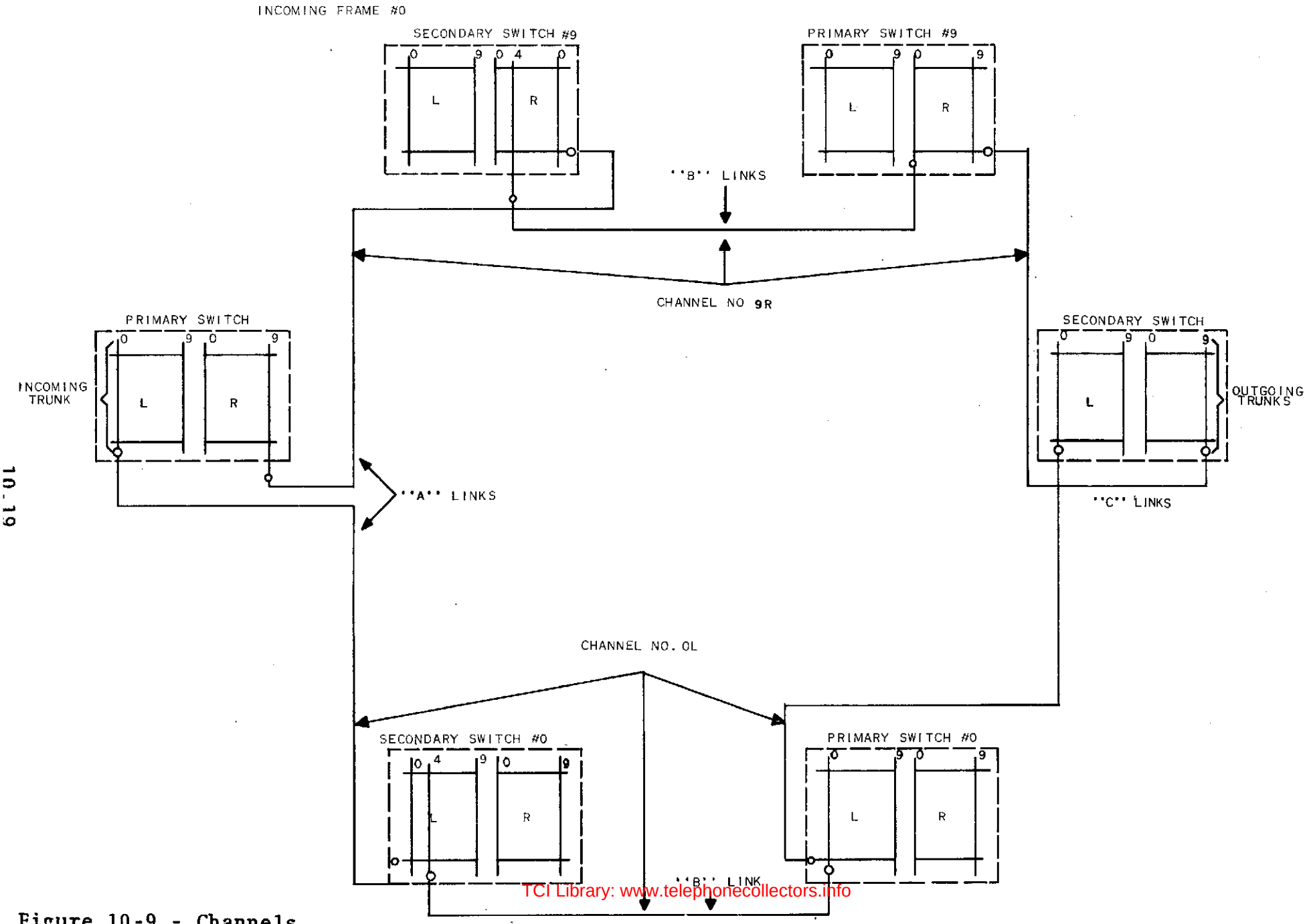

TCI Library: www.telephonecollectors.info

Figure 10-9 - Channels

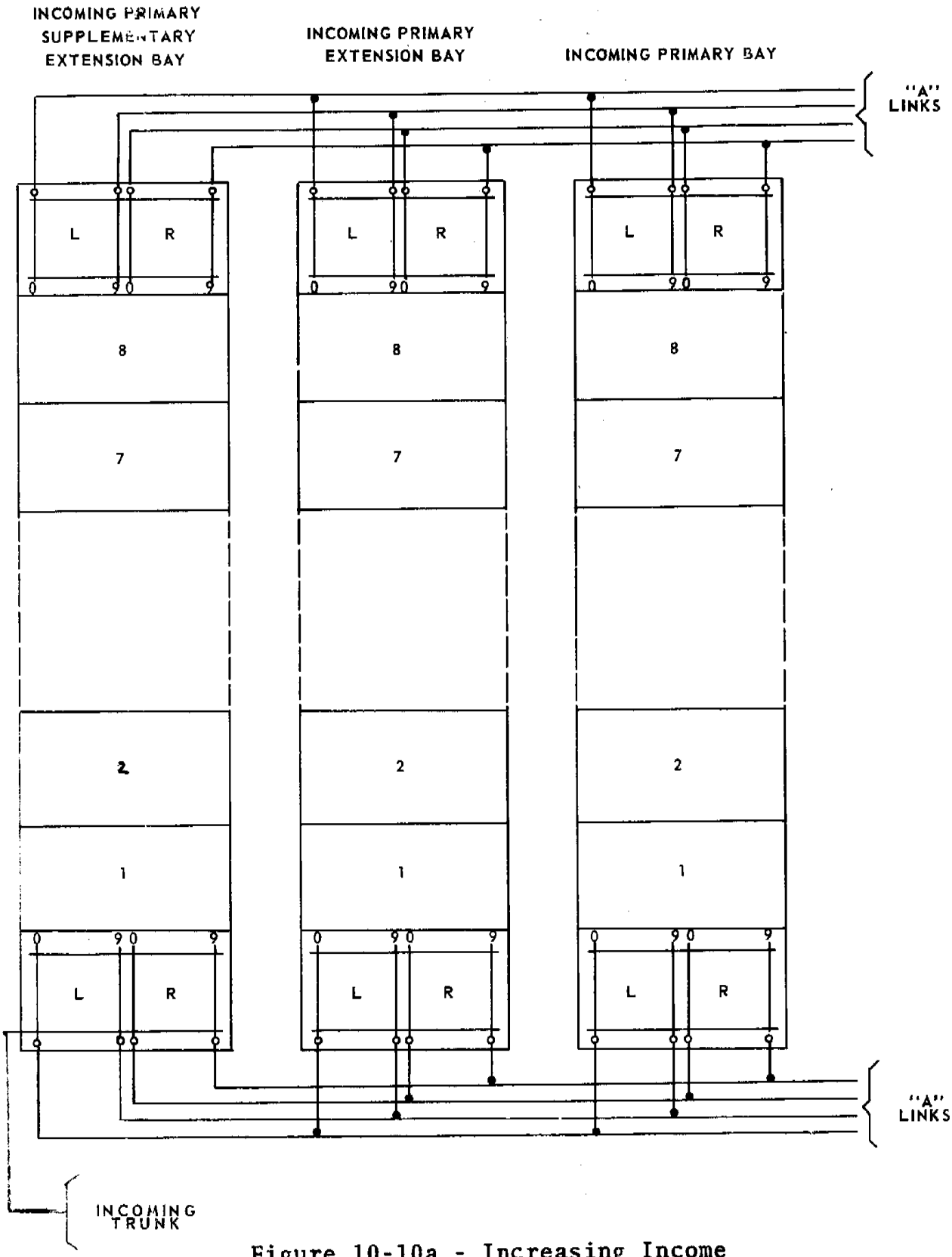

Figure 10-10a - Increasing Income Frame Capacity

TCI Library: www.telephonecollectors.info

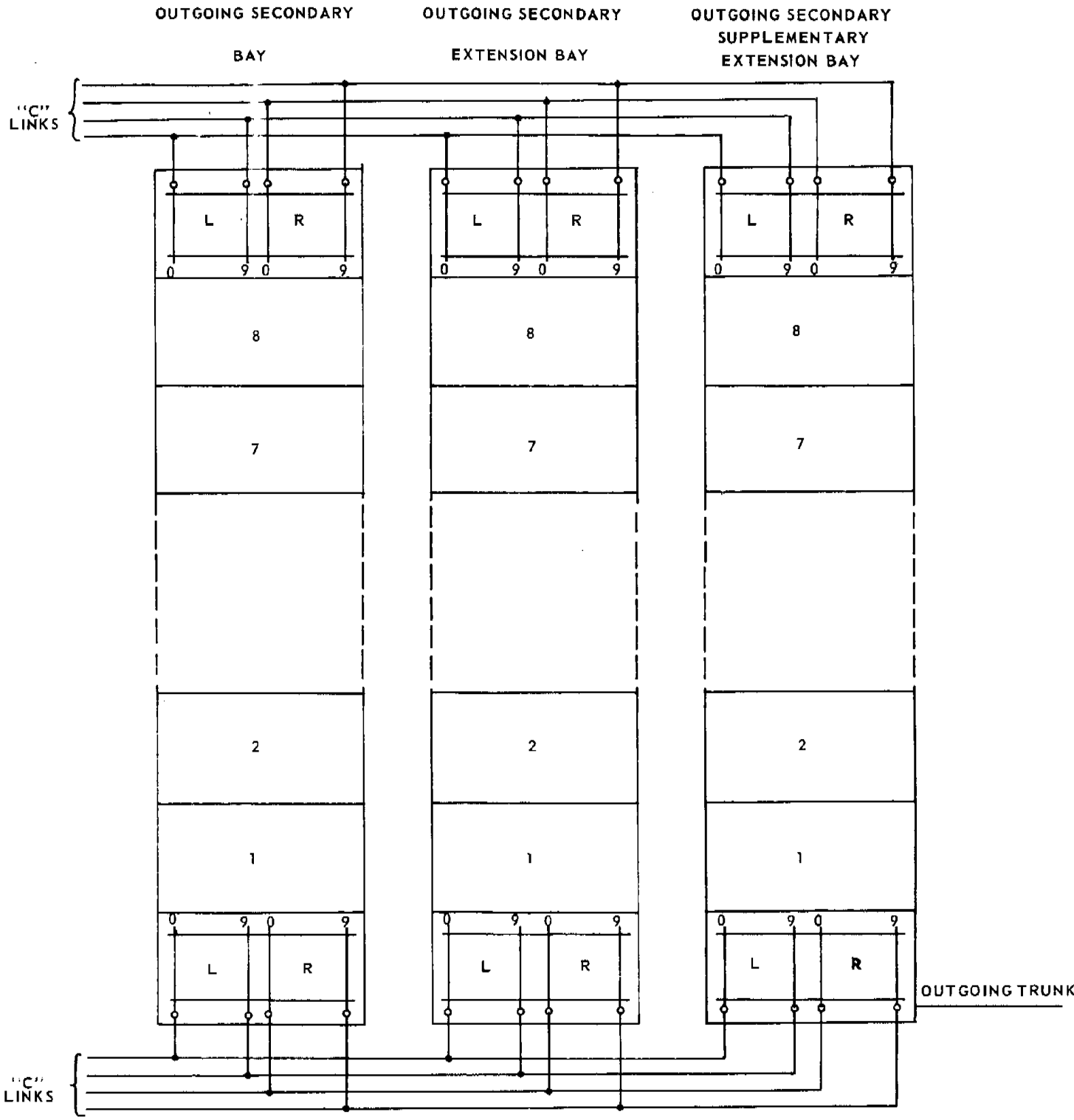

Figure 10-10b - Increasing Outgoing Frame Capacity

TCI Library: www.telephonecollectors.info

Likewise, as referred to in a previous paragraph, the secondary bay of an outgoing frame terminates only 100 outgoing trunks. For the same reason as stated above, a secondary extension bay is always furnished to increase the capacity to 200 outgoing trunks. A second secondary extension bay may be furnished where it is desired to increase the capacity to 300 trunks. The secondary extension, and the second secondary extension bays have the same switch arrangements as the primary bays on an incoming frame, Figure 10-10b.

C. SENDER LINKS

The primary function of a sender link frame is to associate any one of 100 trunks with any one of 40 senders of the proper type. Three types of sender link frames arranged for single class sender access are part of the 4A Toll Switching System. They are:

Incoming MF Sender Link Frames
Incoming Dial Pulse Sender Link Frames
Outgoing revertive and PCI Sender Link Frames

The sender link frame terminates ten trunk groups each on the horizontals of the primary switches and 40 senders on the horizontals of the secondary switches. Each frame includes sixteen 100-point, 6-wire switches mounted in two bays. Eight switches are primary and eight are secondary. The switches are divided into two groups, "A" and "B" units, permitting independent operation of either unit.

Figure 10-11 indicates provisions for terminating 12 leads from each trunk circuit on the horizontals of the "A" primary switch. (Note: This is increased to 18 leads when used for CAMA and overseas calls.) These leads are multipled to the horizontals of the "B" primary switches. The 12 leads from each sender terminate on the horizontals of two secondary switches.

The primary switch verticals are strapped horizontally in pairs, two such pairs being required to carry the leads comprising two links. Each group of ten trunks has access to two links through an "A" primary switch and to two links through a "B" primary switch. The leads from ten trunks are therefore connected to the horizontals across two pairs of "A" switch verticals and a multiple is provided to the corresponding horizontals on the "B" primary switches. The

TCI Library: www.telephonecollectors.info

links between the primary switch verticals and the secondary switch verticals find their outlet at the secondary switch horizontals which provide access to the senders.

Each group of ten trunks is served by four links, each link having access to a maximum of ten senders. Any trunk, therefore, may have access to each one of four groups of ten senders or less on the frame.

The vertical number of the primary switch is the same as the secondary switch number on which it terminates. The vertical number on the secondary switch is the same as the incoming trunk group number on the primary switch on which it terminates. This is known as vertical to vertical spread. Connections between trunks and senders are set up by controllers which are reached by the sender link frame through controller connectors. Senders of a type can be connected to a sender link frame in groups of 80 maximum on a "key" frame basis. The latest arrangement for connecting senders to sender link frames, known as "Simplified Sender Grouping" involves the assignment of no more than 40 senders to each sender link frame group. The "key" frames are the first four sender link frames of a group, and are interconnected with a slip multiple which is arranged so that when there are 40 or less senders, all senders appear on all link frames. When the number of senders exceed 40, the additional senders, up to 80, are introduced into the slip multiple in such a way that each sender has appearances on two key frames. Thus, each sender link frame has access to 40 senders, but not always the same combination of 40.

D. DIVISION OF COMMON CONTROL FUNCTIONS

The arrangement of crossbar switches used for the talking connections between an incoming trunk and an outgoing trunk has been discussed in the preceding chapters. With the exception of the sender link frames, the crosspoints on all switches used for a call remain closed for its duration. The problems of controlling the switches may be understood by considering the operations required to set up these connections. The problems, in appropriate order, are as follows:

a. The calling trunk must be identified.

b. An idle sender with an idle link available to it must be selected.

TCI Library: www.telephonecollectors.info

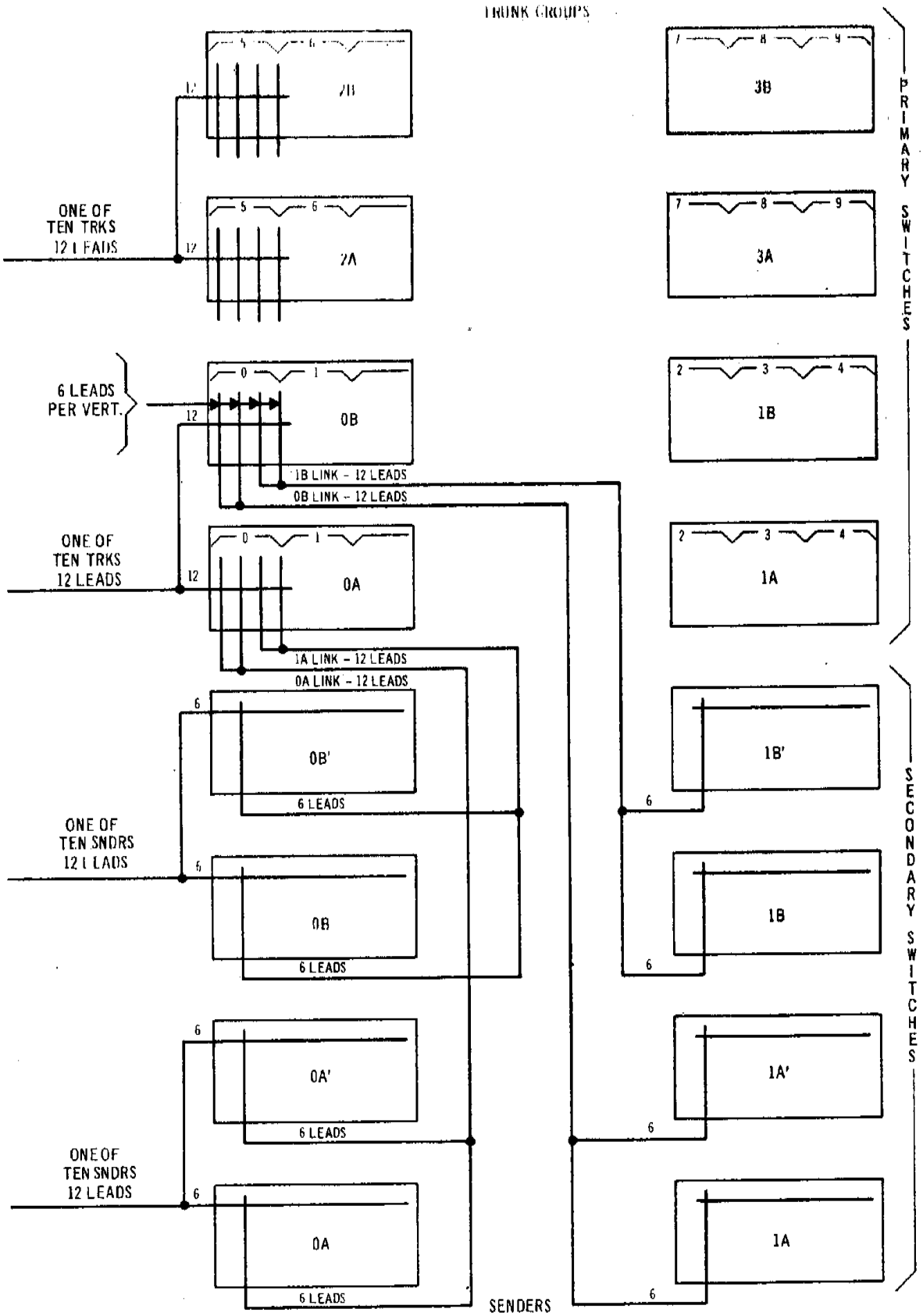

Figure 10-11 - Sender Link Frame - Sender Link Spread

TCI Library: www.telephonecollectors.info

c. The various select and hold magnets in this chain must be operated to set up the connection between the trunk and the sender.

d. The number pulsed over the incoming trunk must be recorded in the sender.

e. The route, in general, must be determined from the first three digits of the number or translating a six digit code for selection of correct route when more than one route exists to another NPA.

f. An outgoing trunk for this route must be selected.

g. An idle channel between the incoming and outgoing trunks must be found and marked.

h. The various select and hold magnets in this chain must be operated to set up the connections between the two trunks.

i. The required number of digits, recorded in the sender, must be passed on through the outgoing trunk to control the circuits which establish the connection to the called line.

j. The sender link crosspoints must be released.

k. The incoming and outgoing trunk must be cut through for talking with supervision.

It is obvious that to provide so much "built-in intelligence" in a large number of circuits would be very costly. Therefore, every effort was considered in the design of the 4A Toll Switching System to concentrate the control operations in as few circuits as possible. Since these few circuits which have the necessary intelligence are used in common for establishing all the connections, the 4A Toll Switching System is known as a "common control system."

In the above list of operations necessary to set up a connection, it is evident that items "d" and "i" stand apart from the other items in that they necessarily require much longer periods of time. The time required to record the number dialed, the time required to transmit pulses to the connecting office, and, in some cases, the readiness

TCI Library: www.telephonecollectors.info

of the connecting circuits to receive the pulses all contribute to this extended time period. Therefore, items "d" and "i" and also "j" and "k" are handled by one group of common control equipment known as senders.

On the other hand, the remaining operations are such as may be completed with very rapid actions. Therefore, items "a", "b", and "c" are performed by a group of common control equipment known as link controllers. Items "e" through "h" are performed by another group of common control equipment known as translators, decoders, and markers. These various groups of common control equipment will be discussed subsequently.

One of the definite advantages of common control operation is that relatively few circuits need be provided to set up connections. Because of the limited number of such circuits, they are equipped with self-checking and service - safeguarding features. In addition, many features, such as second attempts to complete a connection, alternate routing, and automatic recording of trouble, can be economically provided.

The number of switching control elements provided in each installation is dependent upon the number of calls requiring their services and the length of time required to complete their functions. The switching control and associated elements used in a 4A system are as follows:

a. Senders
   - Incoming
     - Multifrequency Pulsing
     - Dial Pulsing
   - Outgoing
     - Panel call indicator pulsing
     - Reverting pulsing

b. Controllers
   - Link controllers and connectors
   - Decoder connectors
   - Marker connectors
   - Truck block connectors
   - Foreign area translator connectors

c. Decoders

d. Translators

e. Markers

TCI Library: www.telephonecollectors.info

1. Incoming Sender

Two types of incoming senders are employed in the 4A Toll Switching System; Incoming Dial Pulse and Incoming Multifrequency Pulse Senders. However, there are three types of MF senders. These are (1) Regular Toll - 11 digits, (2) CAMA - 10 digits and (3) Overseas - 14 digits. The major functions of the incoming sender are to register the incoming digits and to outpulse them, according to directions from the marker, to a connecting office or to an outgoing sender. The outpulsing capabilities and digit capacities of the two types of incoming senders are identical. They have a maximum capacity of 11 digits, consisting of a three digit toll code, a three digit office code, and five numerals. One of the numerals may be a party letter or ringing code. The Multifrequency senders register MF pulses from switchboards equipped with MF key sets or from senders in other automatic offices which can transmit MF pulses. Dial Pulse senders register digits from switchboards equipped with dials or from senders which transmit dial pulses.

Although they register different kinds of pulses, these senders can out-pulse both MF and DP in accordance with the needs of the next office. For example, a call switched to a step-by-step office requires the incoming sender to spill forward dial pulses. This same sender can be used on another call to spill forward MF pulses.

The methods by which incoming senders dispose of their information are determined by characteristics of the called trunk circuits. These methods are briefly described as follows:

a. When completing to step-by-step equipment, dial pulsing is employed.

b. When completing to toll and local crossbar equipment, (when local crossbar is arranged to receive MF pulses) multifrequency pulsing is used.

c. When completing to a trunk requiring revertive or panel call indicator pulsing, an outgoing sender is employed. The incoming sender spills forward d-c pulses to the outgoing sender.

TCI Library: www.telephonecollectors.info

The outgoing sender then converts these pulses to revertive or panel call indicator (PCI) pulses and spills them forward to the local office over the outgoing trunk.

d. When completing to manual trunks, no pulsing is required.

The design of the 4A Incoming Sender incorporates certain spill forward and code conversion features which enable a 4A sender to perform the following functions under control of the decoder and marker.

1. The sender may spill forward all digits received up to a maximum of 11 digits or may generate any 1, 2, or 3 additional digits and outpulse these ahead of the received digits for a maximum of 14.

2. The sender may drop the first three digits and spill forward the remaining digits (maximum 8) or may generate any 1, 2, or 3 digits and outpulse these ahead of the remaining digits (maximum 11).

3. The sender may drop the first six digits and spill forward the remaining digits (maximum 5) or may generate 1, 2 or 3 digits and outpulse these ahead of the remaining digits (maximum 8).

2. Seizure of the Incoming Sender

Upon receiving a signal from a sender in a distant office, or from an operator, the incoming trunk in the 4A office signals the sender link to connect an incoming sender. When the incoming sender is attached to the incoming trunk and is ready to receive pulses, it signals to the operator or sender in the distant office to begin outpulsing as shown in the simplified block diagram of Figure 10-12.

Dial Pulse Sender: When an operator receives signal from the sender, she dials the called number. For example, 212-MU2-1234 is dialed by the operator and registered in a DP incoming sender in the 4A office. On some calls, the decoder and card translator tell the sender how

TCI Library: www.telephonecollectors.info

many digits to expect. On other calls, the sender just waits a short while to make sure that all the digits are received.

Multifrequency Sender: When an operator at a switchboard equipped with MF keysets receives a signal, she keys KP 212-MU2-1234 ST. The same digits are pulsed when this call is outpulsed by an MF sender in a distant office instead of by an operator.

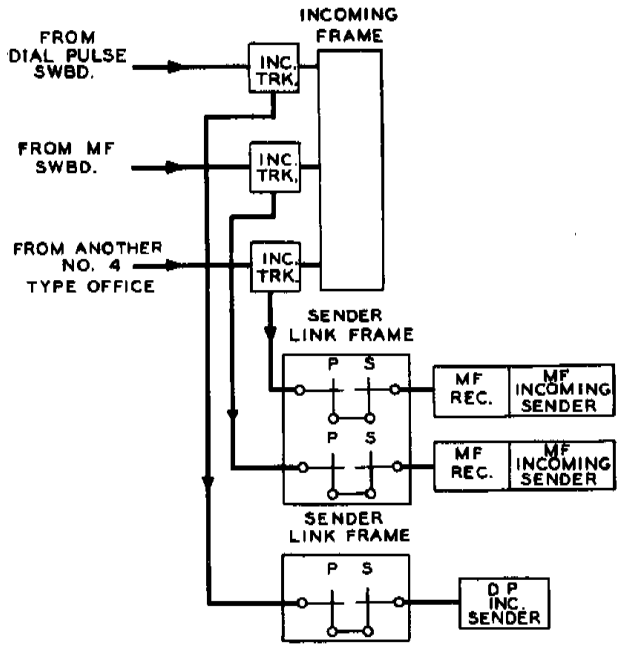

Figure 10-12 - Access to Incoming Senders

After at least three code digits are registered, the incoming sender seizes a decoder and marker which instruct the sender how to outpulse the called number. These instructions will tell the sender:

1. The kind of pulses to be spilled forward. (MF DP or DC)

2. How many of the registered code digits are to be spilled forward.

TCI Library: www.telephonecollectors.info

3. Whether any of the code digits should be converted before spilling forward.

4. Whether any code digits should be prefixed before spilling forward.

5. Not to outpulse anything (for example, on a call to a manual office.)

The incoming sender prepares to outpulse the registered digits in accordance with these instructions. In the meantime the marker has established a channel between the incoming trunk and the outgoing trunk. The sender waits for a signal from the distant office, or from an outgoing sender in the same office, that it is ready to receive the pulses. Upon receipt of this signal, the incoming sender spills forward the digits, as instructed, via the sender link, incoming trunk circuit, incoming link frame, outgoing link frame, and outgoing trunk circuit to the distant office or outgoing sender.

At the end of outpulsing, the incoming sender and sender link release, leaving the transmission path through the incoming and outgoing link frames. In cases where the call is to a manual office and no outpulsing is required, the sender simply checks that an outgoing trunk is attached and releases.

3. Outgoing Senders

Outgoing senders may be seized only by a trunk appearing on an outgoing frame by means of an outgoing sender link frame. The trunk must be of a type that requires outpulsing on a revertive or panel call indicator basis.

The outgoing sender receives and stores d-c key pulses from an incoming sender, and disposes of the digit information via the called trunk.

When a sender, either incoming or outgoing, has disposed of digit information it disengages from the connection and is available for the handling of other calls.

TCI Library: www.telephonecollectors.info

4. Link Controllers and Connectors

The link controllers are the equivalent of simple markers and perform the functions of selecting an idle incoming sender of the desired type, securing an idle link on the sender link frame, and operating the crosspoints which connect the sender to the incoming dial or MF trunk as illustrated in the simple block diagram of Figure 10-13.

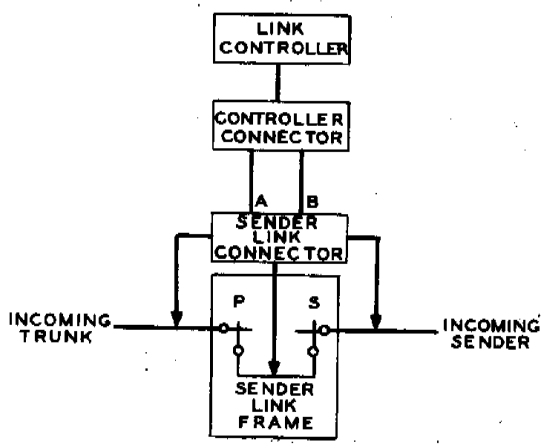

Figure 10-13 - Link Controller Operation

Each sender link connector has access to two controller connectors. When an incoming trunk signals for an incoming sender the sender link connector signals one of the controller connectors (depending on which is available, or if both are available, which one is preferred at that time) to connect to the link controller.

Test leads associated with the incoming trunks, the sender links, and the senders are closed through the sender link and controller connectors to the link controller. The link controller then tests for and selects an idle sender and sender link and connects the incoming trunk to the sender. The controller then releases from the connection and is ready to serve other calls.

TCI Library: www.telephonecollectors.info

The sketch in Figure 10-14 shows the sender link access to controller connectors when a group of six controllers is used. Under the Simplified Sender Grouping arrangement, only 4 controllers are used in a sender link group.

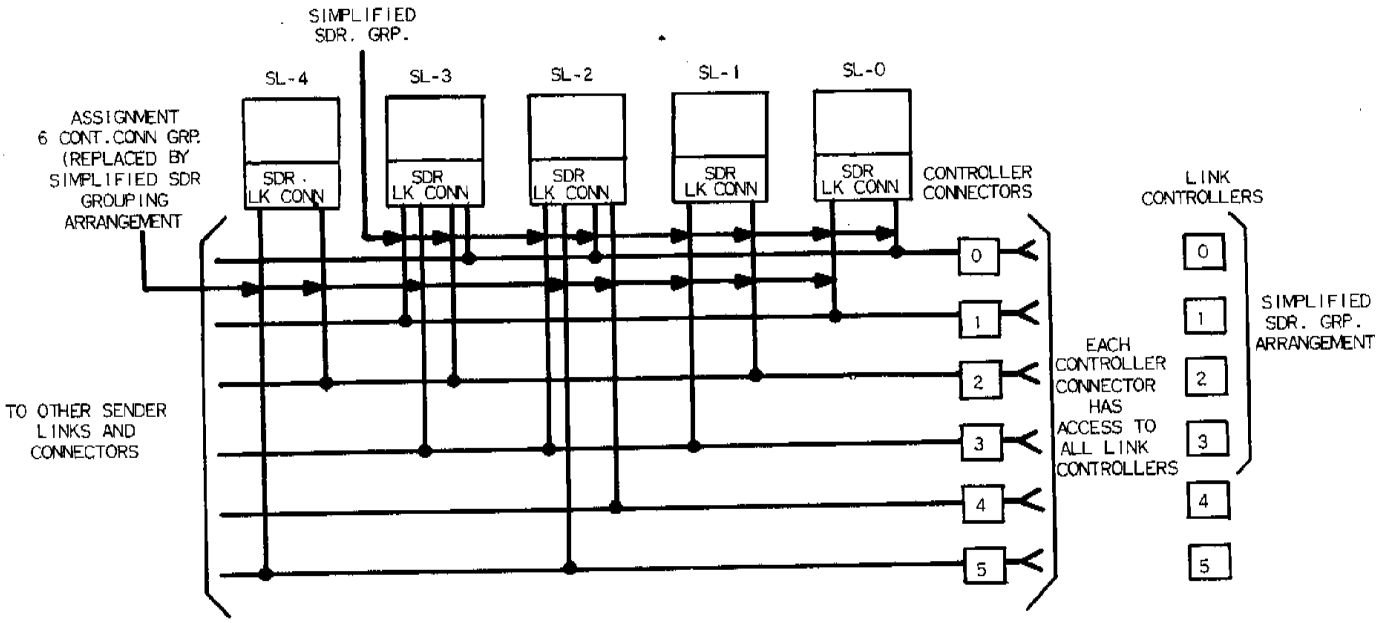

Figure 10-14 - Sender Link Access to Link Controllers

5. Decoder Connector

Decoder Connectors which are made up of a group of multicontact relays are used to connect an incoming sender to a decoder and later in the call (when the decoder seizes a marker) to connect the incoming sender directly to that marker. All senders have access through these connectors to all decoders and all markers in an office.

When an incoming sender signals for a decoder, a chain circuit in the selected decoder connector selects an idle decoder and cuts through the necessary leads by operating its multicontact relays. When this decoder signals a marker

TCI Library: www.telephonecollectors.info

connector to seize an idle marker the marker connector then signals the decoder connector to operate the multicontact relay associated with marker. This ties the incoming sender to the marker used on this call. When the decoder is released, the incoming sender remains connected to the marker until the marker completes its functions. Then the marker and the decoder connector are released.

6. Marker Connector

The marker connectors provide facilities for cutting through a large number of leads between the decoder and a marker. In addition, the marker connector also signals the decoder connector to cut through some leads between the incoming sender used on the call and the selected marker.

When a decoder signals a marker connector to seize an idle marker, the chain, or preference circuit, selects any idle marker (in a combined train office) and the marker connector operates the multicontact relays which cut through the leads from the decoder to the marker. Then the marker connector signals the decoder connector to cut through the incoming sender used on the call to the selected marker. The marker connector releases when the decoder is released from the call.

In a two train office, the marker connectors are equipped with two chain or preference circuits. One chain for the intertoll markers and the other for the toll completing markers. When a decoder signals a marker connector for a marker, the decoder also tells the marker connector which kind of marker is required. The other functions of the connector are the same as those described for the combined train.

7. Trunk Block Connector

An outgoing trunk group is spread over at least two outgoing link frames. In order to facilitate the checking of these trunks, leads from each of the outgoing trunks are brought to trunk block connectors and grouped according to destination. In this way, a marker goes to only one place to test trunks that may be spread over many outgoing

TCI Library: www.telephonecollectors.info

link frames. A marker seizes the proper trunk block connector in accordance with the information obtained from a decoder and card translator. There a marker tests for and seizes an idle outgoing trunk.

A trunk block connector contains the appearances of up to 400 outgoing trunks. These trunks are arranged in groups of forty which is the maximum number a marker can test at one time. A trunk block connector consists of an "even" half connector and an "odd" half connector. Each half connector is an exact duplicate of the other and is designed in this manner so as to increase marker access and service protection. This arrangement is shown in Figure 10-15.

The 400 trunks appearing on each half connector are divided into two groups, 0 and 1 of 200 trunks each. When a marker seizes group 0 in the even half connector, all other markers are locked out of this connector and group 0 on the odd half connector.

Another marker, however, can seize group 1 in the odd half connector. The preference for a particular trunk block connector depends on the number of the sender used in the call. A marker connected to an even numbered sender prefers an even half connector while a marker connected to an odd numbered sender prefers an odd half connector.

A trunk block relay cuts in the leads for the 40 trunks connected to its terminals but the "group start" and "group end" data on the translator cards confine the marker trunk test to the particular span of terminals containing the called group of trunks. All trunks of a group or subgroup, including spares and recorded announcement trunks, if any, are assigned to one trunk block relay if there are 40 or less terminals involved. Trunk groups which require more than 40 terminals are assigned in multiples of 40 trunks to other trunk block relays. However, more than one trunk group may be assigned to the same trunk block relay provided the total trunks do not exceed the 40 terminal capacity.

TCI Library: www.telephonecollectors.info

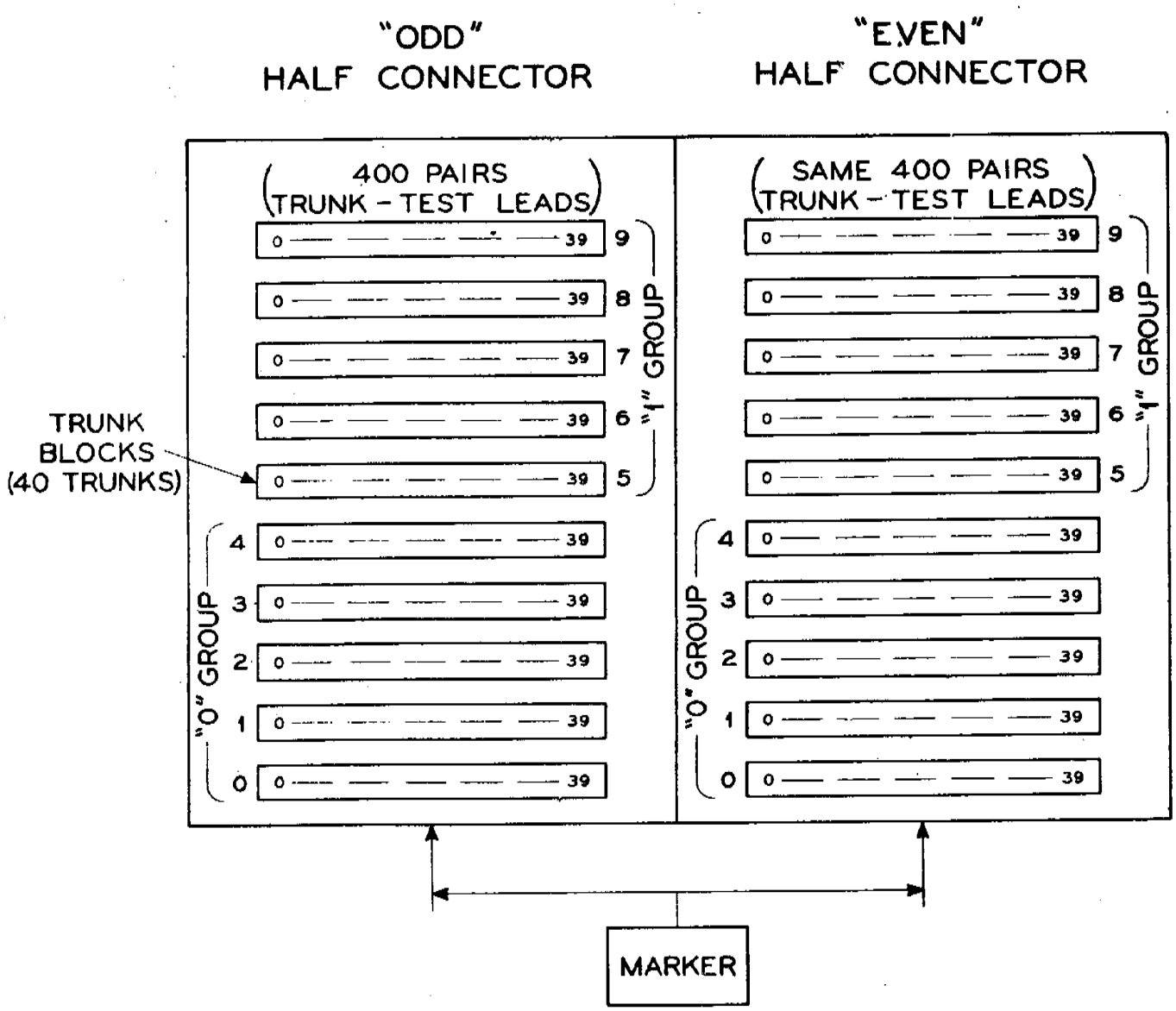

Figure 10-15 - Trunk Block Connector

8. Foreign Area Translator Connectors

One translator connector per "foreign area translator" is provided to cut through approximately 180 leads between a decoder and a translator. One translator connector frame will accommodate

TCI Library: www.telephonecollectors.info

two translator connectors. However, as odd and even numbered connectors are located on separate frames two translator connector frames are required when exactly two foreign area translators are provided.

9. Decoders

The decoder, in conjunction with the card translator, performs the function of decoding the digits registered in the incoming sender into information on outgoing trunk selection, alternate routing, code conversion, variable spilling of digits, and outpulsing class and transmits this information to the marker.

In an office not using the "increased-capacity" features, a maximum of 18 decoders may be provided. With "increased-capacity," as many as 24 decoders may be provided.

When a decoder is seized by an incoming sender for the first time, the decoder always sends the first three digits registered in the sender to the home translator. The sender may or may not have additional digits registered, at this time, beyond the initial three sent. Here a card corresponding to these three digits is dropped. This procedure can be considered a starting point for obtaining a translation on every call. Any further action that the decoder takes is determined by the information contained on the first card as follows:

a. Three digit translation: If the first card indicates that it has enough information to switch the call, then the decoder signals a marker connector to seize an idle marker. The decoder then passes the information it obtains from the card to the marker. The call is then completed in the usual manner.

b. Pretranslation: When more than three digits are required to obtain a translation, the first card dropped indicates specifically how many digits are required. For example one card indicates that four digits are necessary for a certain call; another card indicates that five digits are required for another

TCI Library: www.telephonecollectors.info

call; another card indicates that six digits are required for a particular call. In all these cases the decoder action is the same. If pretranslation option is not used or if the sender has enough additional digits registered, the decoder will not release. If this is not the case and more digits are required, the decoder restores the card, signals the incoming sender that more digits are required, releases from the sender, and is available for servicing other calls.

c. Six Digit Translation: After pretranslation has taken place and the sender has the six digits available, it seizes an idle decoder through a decoder connector. Again the decoder drops an identical 3-digit card in its home translator. At this point the sender signals the decoder that six digits are available. This card then directs the decoder to a card translator which has the card corresponding to the six code digits. The decoder restores the first card and reaches out to the proper card translator and drops the 6-digit card. The decoder reads and decodes the information on the card and signals for the marker. The marker then completes the call.

Other important items of information that the decoder gets from the card and passes to the marker is the location of the outgoing trunks that can be used for a particular routing. The location of a maximum of 40 trunks can be obtained from one card. If there are more than 40 trunks for a particular routing, then two or more cards are necessary. When there are two or more cards available, a decoder can operate in one of three different modes:

a. Card to Card: The decoder advances from one subgroup of 40 trunks to another subgroup of trunks by presenting the appropriate information from a series of cards to a marker which then tests for idle trunks in these subgroups.

b. Relay to Relay: The decoder does not present the information from a series of cards to the marker for finding an idle trunk. The decoder first checks for availability of trunks in

TCI Library: www.telephonecollectors.info

both direct and alternate route trunk groups by means of group busy relays. If none of the trunks associated with the first card are idle, a second card will not be dropped unless a group busy indication indicates that the second card will be associated with an idle trunk.

c. Card to Relay: This is a combination of the above two types.

10. Decoder Route Relays

One decoder route relay is provided for each intertoll trunk group to a primary center, sectional center, or regional center, which is to be used as an alternate route. A route relay is also provided for each trunk group to a crossbar tandem office which is to be used as an alternate route. The number of route relays per decoder to be provided will vary from a minimum of 30 to a maximum of 100.

11. Card Translator

There are two types of translators commonly used in the 4A Toll Office, Home Translators and Foreign Area Translators. Each of these translators has a capacity of 1,176 working cards.

The card translator is literally the "seeing eye" of the 4A common control equipment. It translates the code digits registered in the incoming sender into information which is used by the common control equipment to switch a call. The card translator gets its name from the fact that metal cards are used in the translation process instead of the relay type translator used in all other common control systems.

Card translators are equipped with metal cards, coded, to provide the switching information for all calls arriving at a No. 4A Toll Office. As shown in Figure 10-16 each card has 40 tabs and 118 holes. The tabs are used to code the card to correspond to a called code. This is accomplished by removing some of the tabs so that the remaining tabs are arranged in a definite pattern which is unique for that card. This tab coding is called the input information. The holes in

TCI Library: www.telephonecollectors.info

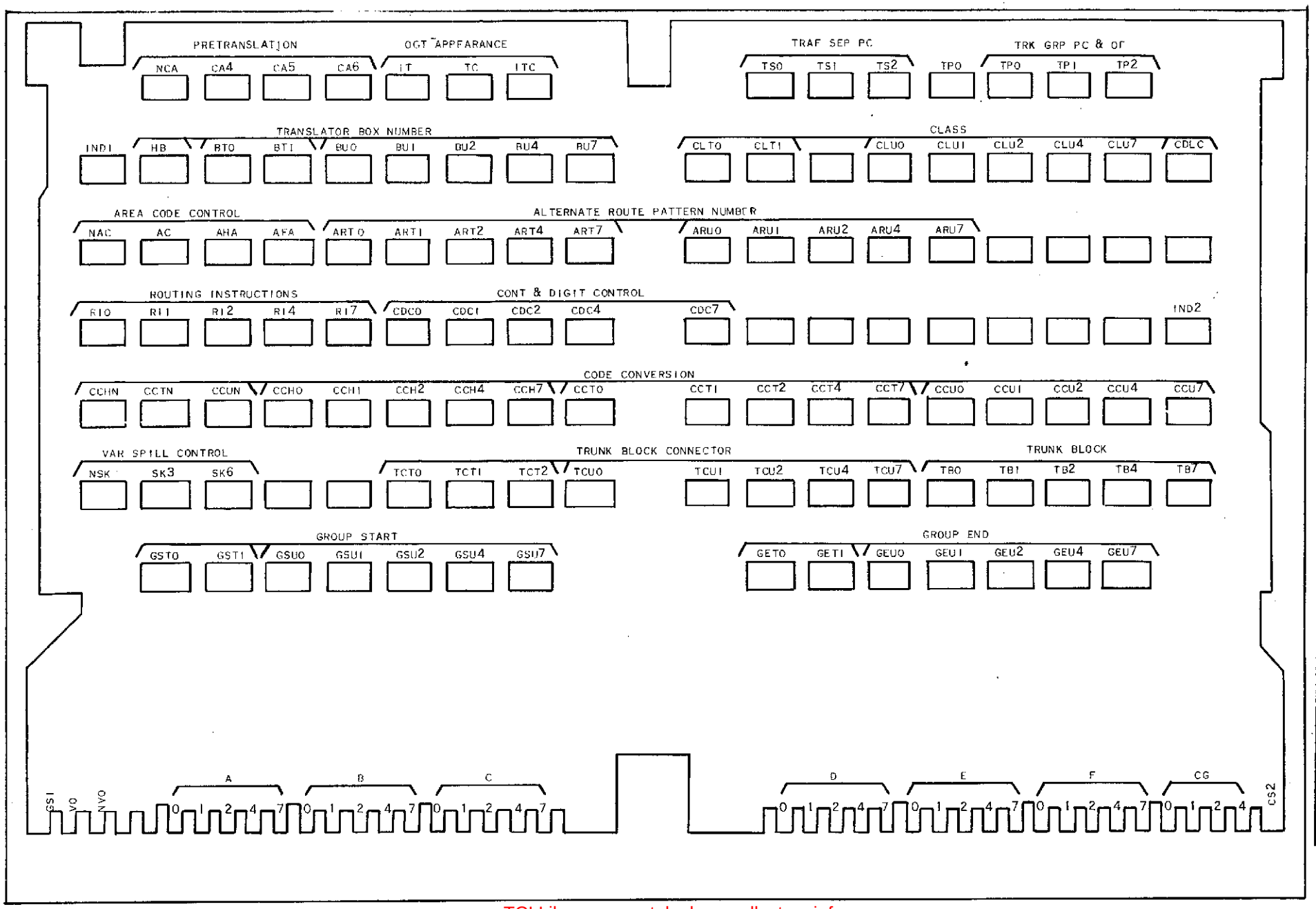

Figure 10-16 - Translator Card

TCI Library: www.telephonecollectors.info

the card are also coded to correspond to the switching information needed for the called code represented by the card. The switching intelligence is applied to the card by enlarging the pertinent holes, and is called the output information.

The basic elements of the translator consists of a light source modulated at 400 cycles, a bank of light sensitive photo transistors and a stack of perforated cards. The cards are stacked between the light source and the photo transistors, of which there is one for each hole in the card. When the cards are in their normal positions the holes in the cards form 118 continuous tunnels or light channels between the light and the transistors. When the translator is operated, that is when a card is dropped about 1/8 inch, all of the light channels are blocked except for those holes which have been enlarged. Figure 10-17 shows a schematic of the translator, and Figure 10-18 indicates the effect of a dropped card on the light channels.

The selection and dropping of a card is accomplished by means of the card tabs and a group of code bars. The tabs correspond in position to, and rest directly on, 40 rectangular bars located at right angles to the cards. As mentioned before, a unique group of tabs are left on the card to agree with the code represented. Figure 10-19 shows a card resting on the code bars when the translator is unoperated.

When the decoder connects to the translator, it depresses certain code bars by means of solenoids. The one card, whose tabs correspond to the depressed bars, is thus permitted to drop as shown in Figure 10-20.

The card drops a distance slightly greater than the height of uncoded (nonelongated) hole. Thus, the dropped card produces a shutter-effect on all light channels except those for which the card holes were enlarged. The open channels energize their photo-transistors and associated detector amplifiers. These circuits read the beams of light and transmit the information to the decoder.

TCI Library: www.telephonecollectors.info

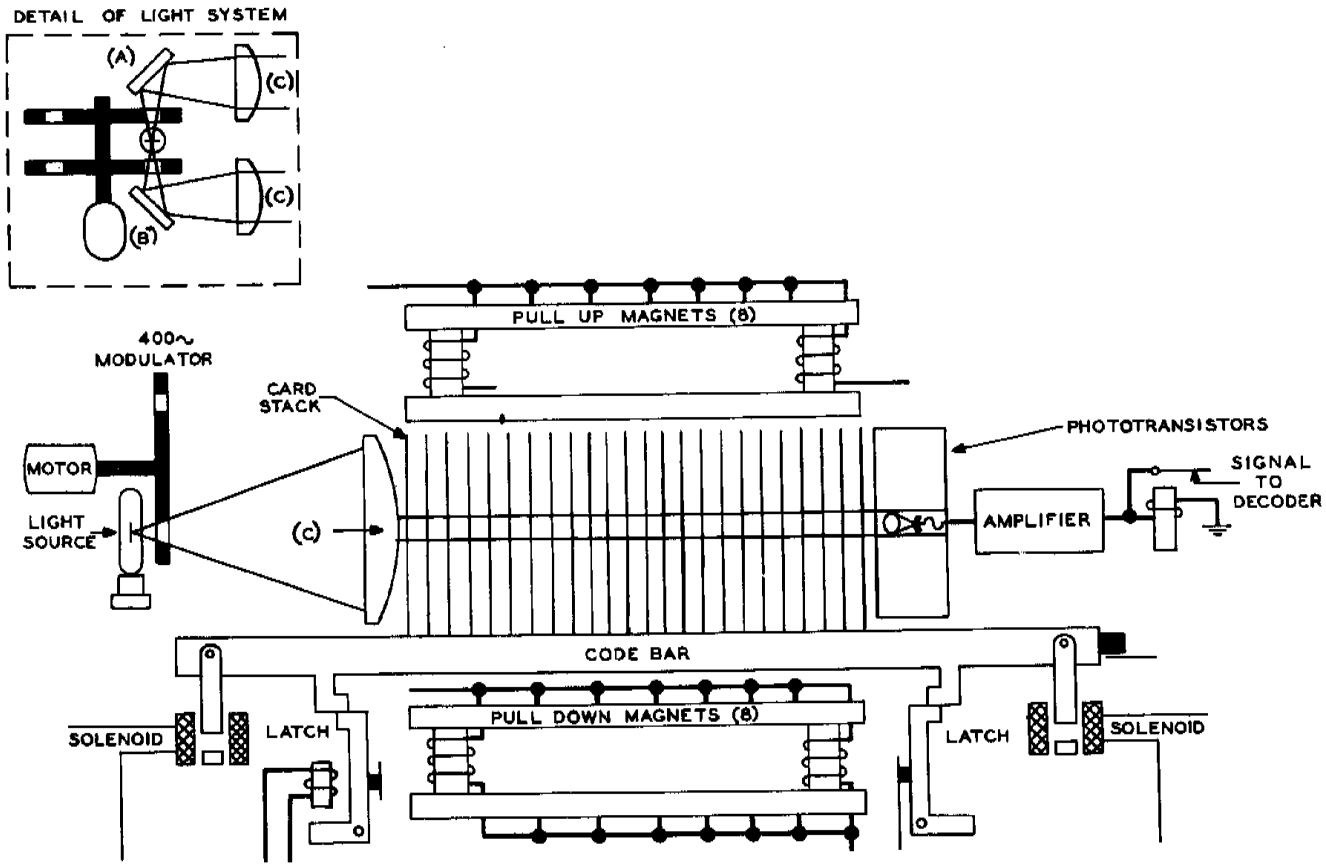

Figure 10-17 - Elements of the Card Translator

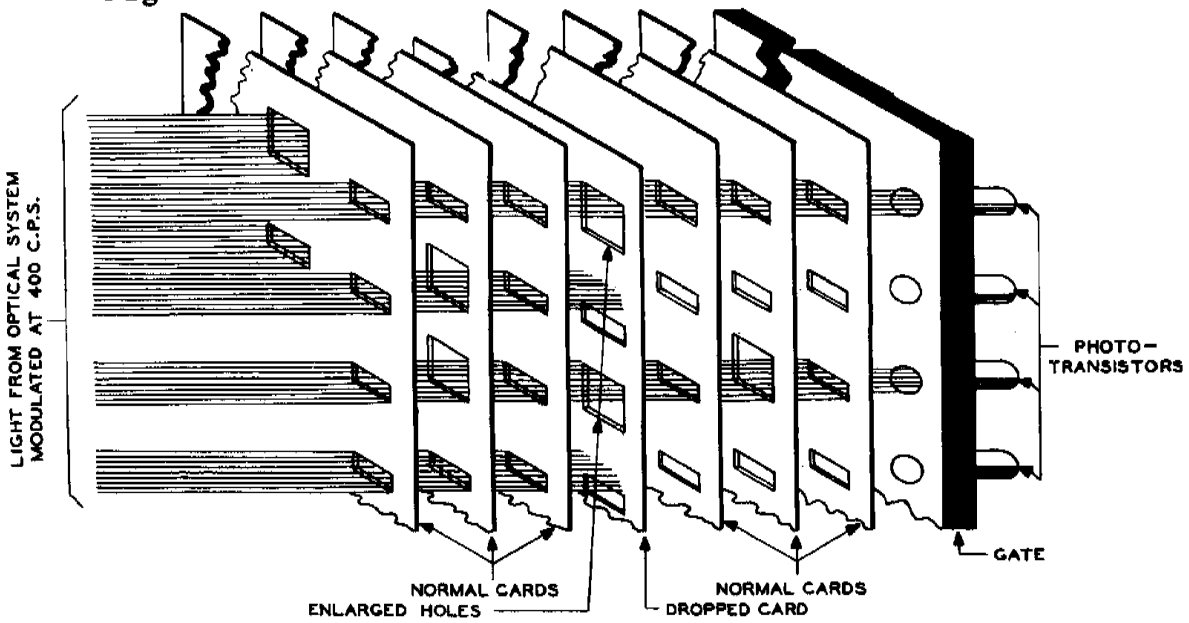

Figure 10-18 - Effect of Dropped Card on Light Channels

TCI Library: www.telephonecollectors.info

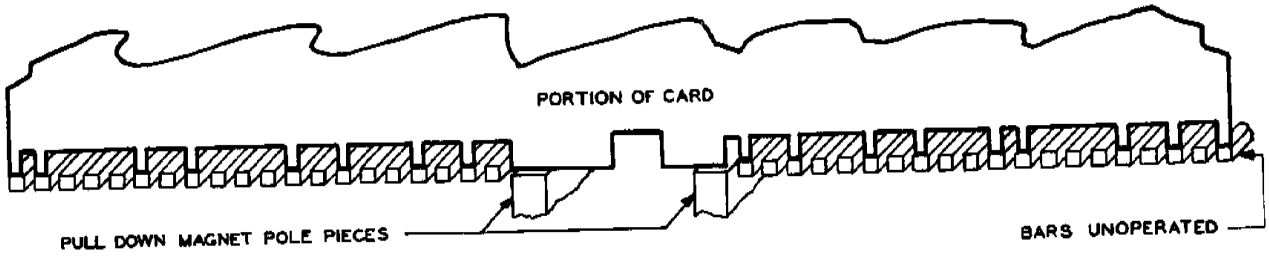

Figure 10-19 - Card Support and Code Bars Normal

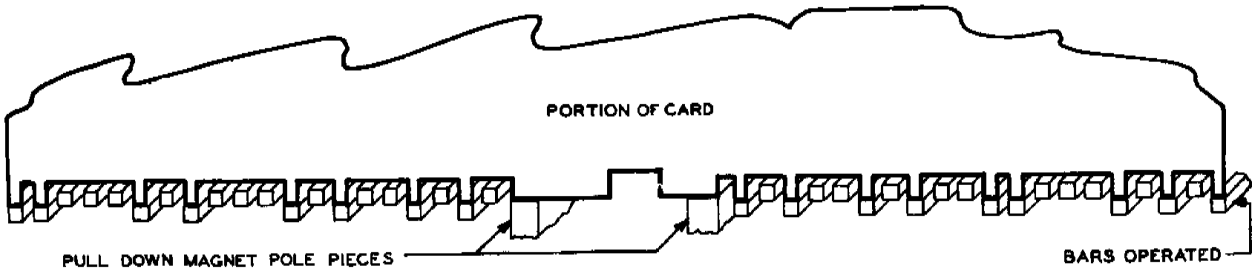

Figure 10-20 - Card Support and Code Bars Operated (Corresponding Card Drops)

Home Translator: One home translator is directly associated with each decoder in the office. On every call, once a decoder is seized, it drops a three digit card in its own home translator. Any decoder can handle any call, therefore all the home translators in the office contain identical sets of cards. If a three digit card fails to drop, the decoder releases and gives a second trial indication to the decoder connector. The connector would then select another decoder and a second attempt is made to drop an identical card. If the card drops, the call goes to completion and the decoder calls in the trouble recorder which records the failure to drop a card on the first attempt. The home translator does two things:

a. provides switching information for calls requiring 3 digit translation.

b. directs decoder to foreign area translators for calls requiring 4, 5, or 6 digit translation, if the home translator is not arranged to handle the particular call in question.

TCI Library: www.telephonecollectors.info

Foreign Area Translator: Each foreign area translator contains all of the 6 digit cards required for completion of calls to several particular foreign areas. For example, one translator may contain all of the cards for three foreign areas and another for five foreign areas. Therefore, unlike home translators, a particular foreign area translator must be used on each call. Each foreign area translator is available to all decoders through the foreign area translator connectors. Foreign area translators may be paired or nonpaired.

Paired. If there is no principal city routing for certain calls, the translators may be paired. In this case both translators of the pair would have identical cards.

Nonpaired. Nonpaired translators contain 6-digit cards for calls which, if routing is not obtained at the foreign area translator, can be routed by principal city routing from the home translator without a second trial.

If a 6-digit card fails to drop in a paired translator, the decoder releases and gives the decoder connector a second trial indication.

12. Markers

The marker is one of the major equipment elements in the 4A toll switching system. It locates an idle outgoing trunk and identifies the incoming trunk handling the call. It then marks an idle path between them and establishes the transmission path. Markers in the 4A offices use information furnished by the card translators and decoders in establishing these connections as shown in Figure 10-21. Some of this information is used by the marker to seize a suitable outgoing trunk. The marker stores other information supplied by the decoder and card translator and later transmits it to the sender. This information instructs the incoming sender how to outpulse the registered digits.

Seizing an outgoing trunk: In a 4A toll office, all of the outgoing trunks (a trunk group), going to a certain distant office are spread over as many outgoing frames as is practical.

TCI Library: www.telephonecollectors.info

Figure 10-22 shows how information from the card translator and the decoder directs the marker to the proper trunk block connector which contains the leads of the desired group of trunks. Here the marker tests for an idle trunk and seizes the first one available. As soon as a trunk is seized, a signal is sent to the distant office telling it to expect a call on this trunk.

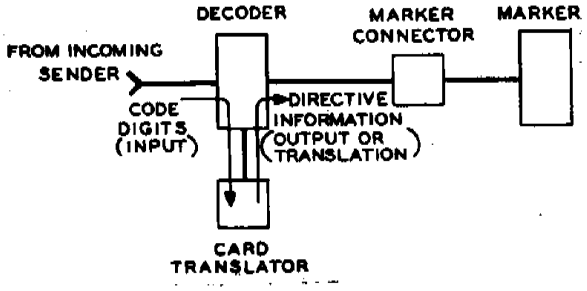

Figure 10-21 - Information to Marker

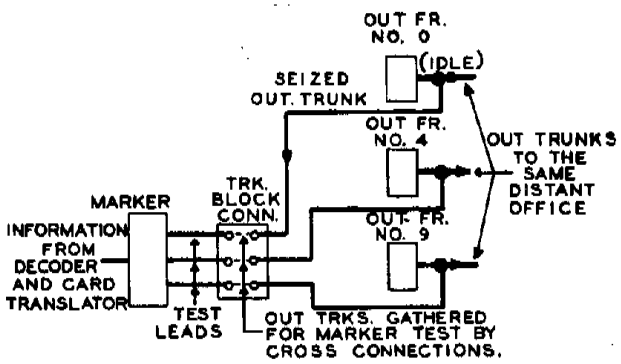

Figure 10-22 - Seizing and Outgoing Trunk

TCI Library: www.telephonecollectors.info

Identifying the outgoing frame: So far the marker knows that it has an idle outgoing trunk but it does not know the number of the outgoing frame on which this trunk appears. It must know this in order to establish the transmission path. The outgoing trunk supplies the outgoing frame number to the marker by sending a distinctive MF signal assigned to this frame over the select magnet lead associated with the trunk. This signal is extended to the marker through the trunk block connector, Figure 10-23 connection 2A.

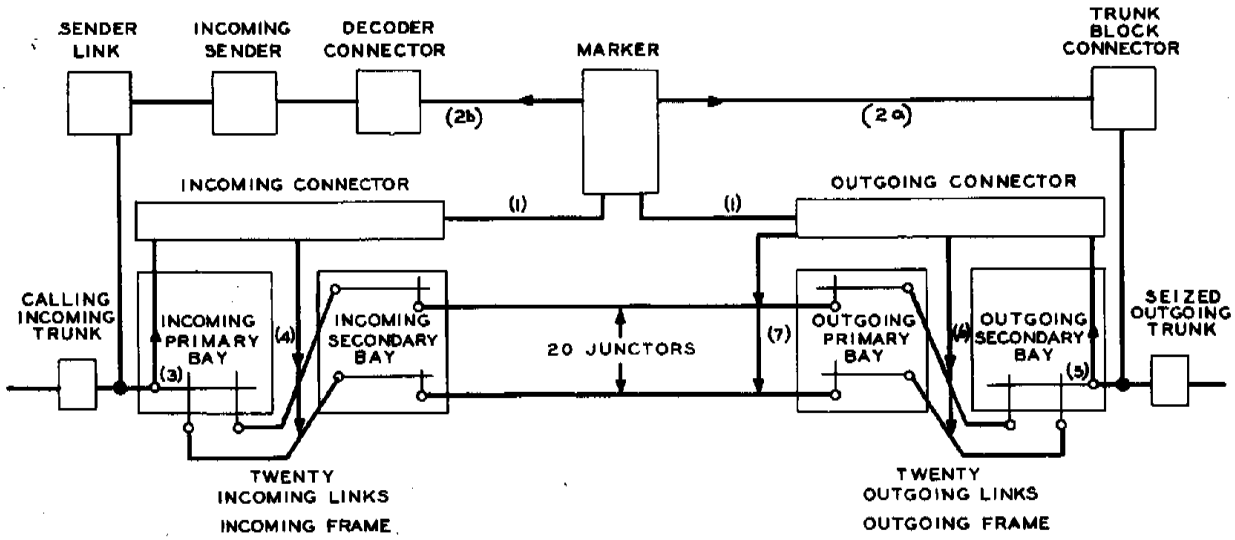

Figure 10-23 - Establishing a Channel

Identifying the Incoming Frame: The marker must also know the incoming frame number in order to establish the transmission path. Therefore the incoming trunk sends its distinctive MF signal identifying this number to the marker over the select magnet lead associated with this trunk. This lead is extended to the marker through the sender link, incoming sender, and decoder connector, Figure 10-23 connection 2B.

Testing Incoming and Outgoing Links: When the incoming and outgoing trunks have identified their respective frames, the marker reaches out to these incoming and outgoing frames by seizing their associated connectors on the marker connector frame. Figure 10-23 connection 1. Through these connector circuits the marker gains access to the incoming links, outgoing links, and junctors.

TCI Library: www.telephonecollectors.info

Information to the Incoming Sender: When the decoder and card translator send information to the marker, some of this information is used immediately and some is stored in the marker. This stored information is sent to the incoming sender when required. This stored information directs the incoming sender to outpulse the digits in such a way that the needs of the next office are met. For example, if the call is switched to a step-by-step office then the sender spills forward dial pulses to direct the step-by-step switches toward the completion of the call. In another case, such as to another 4A office, the sender is directed to spill forward multifrequency pulses. If the call is to a manual office, the sender does not spill forward any digits.

Second Trial Feature: The marker has a second trial feature for making a second attempt to complete a call. Second trials are made if the marker encounters trouble, if the marker cannot match a channel, or if the marker is given a second trial routing instruction.

10.3 TRUNK EQUIPMENT AND TRAFFIC IN THE 4A SYSTEM

A trunk is a communication channel used as a common artery for traffic between switchboards or other switching devices. Trunk circuits consist of line facilities and trunk relay equipment. Trunk relay circuits provide the means by which the line facilities connect to the switching devices. These circuits are of various types, depending upon the types of traffic handled and the equipment to which they connect. Trunk relay circuits in the 4A System are designed for one-way or two-way operation. One-way circuits may be selected from one end only, they may be either incoming or outgoing. The two-way circuits are associated with intertoll trunks only. They may be seized from the distant end on an incoming basis or may be seized by common control equipment within the 4A System on an outgoing basis. Inasmuch as all switching is made on a four-wire basis, it is necessary to convert trunks which employ a two-wire transmission path to a four-wire. This conversion, which in general is required for all toll tandem and toll completing trunks, is obtained with hybrid coils. These coils are part of the associated trunk relay circuit. Trunk relay circuits associated with four-wire intertoll trunks do not, of course, require hybrid coils.

TCI Library: www.telephonecollectors.info

The 4A Toll Switching system provides switching facilities for toll traffic. The incoming traffic to a particular 4A installation originates either within its toll center area or from other toll center areas. This traffic is switched for local completion or for completion in other toll center areas.

Types of Trunks: The trunks of the No. 4A System may be classified as intertoll and toll connecting.

Toll connecting types include:

a. Toll Tandem: completing and thru; C.A.M.A. trunks

b. Toll Completing
   LW trunks (Leave-Word formerly TX trunks)
   121 (inward assistance) trunks
   Information trunks
   Rate and Route
   Delayed through position trunks

Miscellaneous type trunks include:

a. Overflow

b. Combined NC-operator

c. Reorder

d. Digit absorbing

e. Test trunks

Intertoll Trunks: An intertoll trunk is an incoming, outgoing, or two-way trunk connecting the 4A System with other toll switching systems. The line facilities may be either two-wire or four-wire.

Toll Tandem Trunks: The toll tandem trunk is an incoming trunk connecting outgoing or DSA switchboards with the 4A System. These switchboards may be No. 1, 3, 3CL, 5 toll switchboards or any type of DSA switchboard. These switchboards, regardless of the type, are located within the toll center area. The various types of tandem trunks employ either dial or multifrequency pulsing. The 3-wire trunks transmit supervisory signals over the third wire. The 2-wire trunk employs the talking path for the transmission of pulses and supervisory signals. The 4-wire toll tandem trunk uses multifrequency pulsing and a sleeve path fifth wire for the transmission of supervisory signals.

TCI Library: www.telephonecollectors.info

Toll Completing Trunks: A toll completing trunk is an outgoing trunk from a toll switching unit to a local office, operator, or testboard in the toll center area. The term "toll completing" does not apply to a particular type of trunk, but does apply to various types of trunks that handle toll completing traffic. These are described briefly.

Toll switching trunks are provided for calls which are completed to subscribers served by various types of local and community dial offices. In general, toll switching trunks are arranged for dial pulsing to step-by-step offices, multifrequency or revertive pulsing to crossbar offices, revertive pulsing to panel offices, and panel call indicator pulsing to manual offices.

LW trunks are trunks to outward positions handling delayed traffic LW trunks for the purpose of reaching particular outward positions from other toll centers. These trunks employ direct current signaling, and usually require no pulsing on the part of the sender for completion.

Service trunks, such as 141 route operator, 131 information, 121 inward, 151 delay operator, 101 testboard, 102 milliwatt supply and others are considered toll completing trunks.

A. ASSOCIATED FRAMES

1. Alternate Route Traffic Control

The successful dialing of nationwide long distance traffic, by both operators and customers, depends on a high speed intertoll network so that "all trunks busy" conditions will infrequently occur, even during the average busy season. Alternate routing is one of the techniques that makes this possible. Actually, alternate routing is a method of advancing a call at a switching point by diverting it to a trunk group, other than the first choice group, when the first choice group is busy. Multialternate routing, a provision for more than one alternate route, is a feature of the alternate routing pattern in the 4A toll switching system.

TCI Library: www.telephonecollectors.info

The alternate route traffic control frame provides centralized facilities for interconnecting the alternate route relays of each decoder in accordance with the basic switching plan. Associated with each decoder route relay is a route transfer relay which can be used to prevent the alternate routing of traffic over a trunk group to a Central Switching Point that has been congested. The route transfer relays are controlled by the operation of traffic control keys located with their associated guard lamps on the traffic supervisory cabinet.

2. Frame Identification Frequency Supply

This frame mounts the oscillators, amplifiers, and mixing resistors for the frame identification frequencies used in the marker operation. The signal received from the oscillators is amplified, mixed with a three frequency alternating current signal, and distributed to the incoming and outgoing link frame and to the trunk block connector circuit associated with the jump hunt trunk routes. By means of these signals, the marker is enabled to identify any incoming or outgoing link frame or trunk group. Each frame identification signal consists of a combination of three different frequencies, each of which is supplied from a separate oscillator and amplifier and through separate mixer resistors. The frequency output from amplifier A is 425 cycles, from B 595 cycles, and so on up to the H amplifier, 1615 cycles, in steps of 170 cycles. These frequencies are combined through mixer resistors in such a manner as to provide 40 different signals each of which represents a certain incoming of outgoing link or trunk group. All of this equipment is furnished in duplicate and mounted on separate supply panels which for safety reasons, are located some distance apart.

3. Multifrequency Current Supply Frame

This frame mounts the oscillator units which generate the MF current for MF pulsing. The circuit generates the six frequencies, 700, 900, 1100, 1300, 1500, and 1700 cycles used for MF key pulsing from switchboards and testboards and for multifrequency outpulsing from senders. A minimum of two supply frames are furnished in each office to assure continuity of service.

TCI Library: www.telephonecollectors.info

Multifrequency Receiver Frame - The multifrequency pulsing receiving circuit receives and amplifies MF pulsing signals and converts these signals into dc pulses to operate various code combinations of relays in the associated sender. The MF pulsing signals consist of an alternating current of six different frequencies which are combined to provide key pulsing and start signals, and digit codes as shown in Table 10-1.

TABLE 10-1

Frequency & Designation	0	1	2	3	4	5	6	7	8	9	KP	ST
1700-10											X	X
1500-7	X							X	X	X		X
1300-4	X				X	X	X					
1100-2			X	X			X			X	X	
900-1		X		X		X			X			
700-0		X	X		X			X				

4. Office Interrupter Frame

This frame is arranged to mount reciprocating bar-type interrupters which function to supply interrupted battery or ground to the various circuits in the toll switching office. A minimum of two frames is provided for each office so as to divide the load approximately evenly and minimize service reaction in event of the temporary failure of the motor or drive mechanism of a frame.

5. Circuit Busy Announcement Trunk

The CBA frame performs the following functions in the 4A Toll Switching System:

1. Provides indications directly to the decoders as to the lowest numbered subgroups in which there are idle trunks available on groups which are used for alternate routes.

2. Aids in disposing of certain types of calls when all intertoll trunks of a group are busy, and in these cases, provides the originating operator with information as to the availability of trunks.

TCI Library: www.telephonecollectors.info

3. Provides idle indications to toll operators in the same building for all outgoing intertoll trunk groups and groups to crossbar tandem.

4. Provides trunk group-busy indications at the traffic supervisory rack.

6. Traffic Measuring and Administrarive Facilities
Traffic Register Racks

The traffic register rack provides miscellaneous registers for recording for traffic purposes:

1. Overflow conditions on link frames, outgoing trunks, common reorder, no circuit, blank code, and system overload announcement trunks.

2. Group busy conditions on incoming trunks other than intertoll.

3. Peg count of calls served by incoming and outgoing link frames, marker peg count, trunk block connector peg count, marker through traffic peg count, marker traffic separation per count, marker card read peg count, clock circuit pulses, reorder system overload announcement, local call intercept, blank code, no circuit trunk, group peg count, reorder trunk time alarms, marker trunk group peg count, sender peg count, decoder through traffic peg count, decoder separation peg count, decoder peg count, decoder pretranslation peg count, outgoing trunk group peg count, ringdown trunk peg count, card translator peg count, and various CAMA peg counts.

4. Sender link delay registration: Time alarm if two delay registrations are received within 28 to 56 seconds.

5. Group busy time duration registration: for common trunks, terminal trunks and via trunks one-way incoming, one-way outgoing, and two-way trunks, and for senders.

6. Usage registers: Group cycle and detector usage registrations associated with the traffic usage recorder circuit.

TCI Library: www.telephonecollectors.info

7. Load measurement: This circuit is arranged to record the traffic load on the individual incoming and outgoing link frames, the total traffic load on incoming link groups, and the traffic load on the sender groups.

8. Multiple plant registers: A multiple appearance of the first and second trial marker and decoder registers and the stuck sender registers from the maintenance center.

7. Traffic Supervisory Rack

The traffic supervisory rack is used in the operating room to assist the chief operator in estimating the delay that will be encountered in handling calls on any trunk group during heavy traffic periods; to provide a means to put that trunk group on a specific "delay quotation" basis of operating procedure; and to provide means of denying access to trunk groups for alternate route traffic. The traffic supervisory rack includes the following equipment: Sender Group Busy Lamps; Overflow Lamps; Delay Quotation Jacks for Overflow Trunks; Delay Quotation Trunk Patching Jacks; Alternate Route Traffic Control Keys and Lamps.

8. Traffic Usage Recorder

The traffic usage recorder is used by the traffic department for measuring the usage of the numerous circuits in the 4A Toll Office. This information is necessary for initial planning, for engineering quantity and arrangement of specific components, and for assignment of lines and trunks for a balanced system.

The traffic usage recorder is designed to measure usage directly in units of CCS (100 call seconds). At the end of any period of time the average traffic load carried by a group of circuits can be determined by taking account of the number of scans made and the total number of busies encountered. If the scan rate is set at 36 per hour, the accumulated number of busies at the end of an hour will indicate the group traffic load directly in terms of CCS per hour. Therefore the traffic usage recorder has a scan rate of 36 per hour with a corresponding scan interval of 100 seconds.

TCI Library: www.telephonecollectors.info

B. MAINTENANCE EQUIPMENT

1. Automatic Outgoing Toll Connecting Trunk Test

The automatic outgoing toll connecting trunk test (AOCT) frame provides for the selection of certain outgoing toll connecting trunks on the outgoing link frame and if they are idle, tests them for their principal features. All trunks which have access to local central office type test lines or on which a busy line flashing test can be made, and certain miscellaneous nonoperator type trunks are tested automatically. All trunks selected can be tested manually. This circuit appears on the incoming link frame in a manner similar to an incoming trunk, and by means of the test connector, will direct a marker to establish a connection through the incoming and outgoing links to the trunk to be tested. After determining that the trunk is idle, it makes it busy, and by means of a code passed to the common control equipment, directs the marker to test the particular trunk block terminals associated with the test circuit.

2. Automatic Outgoing Intertoll Trunk Test

The automatic outgoing intertoll trunk test (AOIT) frame is used to make operational circuit tests on outgoing intertoll trunks and the outward path of 2-way intertoll trunks to other toll offices. The tests are made through the regular switching train and are performed manually or automatically depending on whether or not the trunks can be terminated in an intertoll trunk test line at the far end. This circuit appears on the incoming link frame similar to an incoming trunk, and by means of a test connector will direct a marker to establish a connection through the incoming and outgoing links to the trunk to be tested. After determining that the trunk is idle, the test circuit makes it busy, and by means of a code passed to the common control equipment, directs the marker to test the particular trunk block terminals associated with the test circuit.

TCI Library: www.telephonecollectors.info

3. Incoming Sender and Register Test

The incoming sender and register test frame provides a means for the routine testing of all incoming sender (CAMA and NONCAMA), and CAMA transverters on an automatic basis. Also, individual equipments may be tested on a single or repeat test basis. The sender is seized by the test frame and selected codes are transmitted to it on either a multifrequency or a dial pulse basis. The output of the sender is then automatically checked against the input. Lamps are provided to indicate the progress of the tests and to indicate any failure of the sender on specific tests.

On automatic routine tests, the test frame automatically progresses from one sender to another until all of the incoming senders in the office have been tested, or, on certain tests, until all of the senders of a class, that is, dial, multifrequency, or CAMA have been tested. If trouble is encountered, the test frame stops and an alarm is operated. Various combinations of input and output conditions are checked, many on a marginal basis. The frame is equipped with a full keyset and a number of lever type keys for establishing the various test conditions.

4. Manual Outgoing Trunk Test Frame

This test frame (MTCT) provides a means of testing the toll completing trunks in the 4A toll office. The trunk test jacks are arranged so that this test circuit tests directly into the tip and ring leads of the cable to the distant office. It does not test the outgoing trunk relay equipment except to determine whether the trunk is idle. Provisions are made for directing a call over various types of trunks to a test line in the distant office, using a straightforward operation, revertive panel call indicator, multifrequency dial, and step-by-step pulsing. In conjunction with the test line at the distant end this circuit tests that the trunk is capable of reaching a particular destination code or number and that the ringing or signaling circuit as well as the supervision is functioning satisfactorily. This

TCI Library: www.telephonecollectors.info

circuit is also used to facilitate transmission testing of the trunk by providing rapid means of directing the trunk to a transmission test line in the distant office.

5. Test and Make Busy Frame

This test frame includes the test and make busy jacks of the outgoing trunks to be tested. Common jacks associated with the MTCT test circuit are also provided in this test frame. These common jacks are so located that they can be readily patched by means of cords to any one of the test and make busy jack circuits. In the 4A toll office, the test and make busy jacks are always cabled to the distributing frame for cross-connection to the associated outgoing trunk.

6. Outgoing Sender Test Frame

This frame has the same general functions as the incoming sender and register test frame, that is, automatic progression over the outgoing senders, or individual circuit testing, comparision of input with output information, indicating lamps, etc.

7. Sender Make Busy Frame

This frame provides for a central location for the maintenance of senders and incoming registers (used in CAMA application). This frame through the use of make busy jacks permits the removal of any defective sender from service. Associated with each jack is a stuck sender lamp and a priming jack. When a sender becomes stuck, its corresponding SS lamp will light and a minor audible and visual alarm will be brought in. The release of the stuck sender is made by the insertion of a make busy plug into its associated priming jack. A plug inserted into the MB jack of a stuck incoming or CAMA sender will cause the sender to be connected to the trouble recorder to record the number of the incoming trunk, whereas the insertion of a plug into the MB jack of a stuck outgoing sender will light a lamp indicating the sender link frame through which the sender is connected.

TCI Library: www.telephonecollectors.info

Associated with each incoming register is a priming jack and a stuck incoming register lamp. When an incoming register becomes stuck, its corresponding SP lamp will light. An incoming register is made busy by inserting an MB plug into the priming jack. The release of an incoming register is made by the insertion of a plug into the priming jack.

8. Trouble Recorder

The trouble recorder frame consists of a trouble recorder, a decoder marker test circuit, a link controller test circuit, and a translator conditioning circuit all of which function more or less independently. The trouble recorder is called in by the link controller, decoder, or marker to make a punched card record of the information set up in the common control circuits at the time a call encounters trouble. The two test circuits are used to set up test calls on their respective common control circuits. A remote control feature permits the start and release of the test call at the location of the common control frame. The translator conditioning circuit is used to prepare any of the translators for addition or removal of cards or for the removal of the selector unit of the translator. Make busy jacks are provided for busying translators, decoders, decoder connectors, markers, link controllers, and controller connectors. In addition, traffic condition lamps are provided for the above frames and for the incoming, outgoing, and block relay frames. Jacks are also provided for putting the emergency translator in service in place of any other translator.

Card records may be originated by various circuits in the office, each of which has access to the trouble recorder circuit with preference in the following order: Decoders; Intertoll Markers; Toll Completing Markers; Link Controllers; Decoder Marker Test Circuit; Link Controller Test Circuit; Position Link and Controller Circuit; Register Link Alarm Circuit; Master Timer; AMA Recorders and Transverters.

TCI Library: www.telephonecollectors.info

When either of the two test circuits finds a trouble recorder busy on a service call, it will wait until the trouble recorder becomes available. The common control circuits, however, will not wait if they find the trouble recorder busy, but will lock in a lost record lamp in the trouble recorder frame and then release.

Tests of decoders, markers, and certain associated circuits, such as card translators and trunk class translators (CAMA) may be made from the trouble recorder frame. In all cases, a decoder is selected for use in the test and the test circuit primes this decoder with test call information similar to that which it would normally receive through a sender. Arrangements are provided for forcing the decoder to select a particular marker in a test call or allowing it to select a marker on a service basis.

Tests of link controllers may be made from the trouble recorder frame using the first link controller connector of each group to cut through test leads. The test circuit furnishes all of the information that the controller would receive through the sender link. The controller goes through all of its functions, including the selection of a simulated sender in the test circuit.

In-use lamps and alternate route lamps are concentrated in one portion of the trouble recorder frame and make busy jacks are concentrated in another part of the frame.

9. Trouble Tracing Selector

In the 4A toll office there are incoming tandem trunks which have access, through the crossbar switching equipment, to any one of a number of outgoing intertoll trunks. When a trouble is reported on one of these connections only the identity of the incoming tandem trunk is known to the reporting operator. Since, for trouble location, it is also essential to know the identity of the particular outgoing toll trunk involved in the connection, some means must be provided to enable the test board attendant to identify this particular circuit. This is done by the provision of step-by-step trouble tracing

TCI Library: www.telephonecollectors.info

equipment. This equipment permits the test board attendant to connect, by dialing, to the reported incoming tandem trunk which is already connected through the toll crossbar equipment to the particular outgoing trunk involved. Once this connection from the test board is established, testing potential is applied over it to the outgoing toll trunk and the resulting operation of a lockout relay in that trunk lights an associated lamp in front of the test board attendant. Having thus identified the outgoing toll trunk, the trouble tracing selector equipment is released and the operator disconnects.

10. Auxiliary and Service Equipment
Intertoll Trunk or CAMA Service Observing Frame

This circuit is used with service observing desks No. 7 or No. 12. It provides for observing on No. 4 type intertoll or incoming tandem trunk circuits in a No. 4A toll office with CAMA. The association of the particular trunk with the service observing trunk is effected by patching between the fifty connector sockets and the loop sockets for the associated trunks.

11. Emergency Alarm

The majority of 4A installations maintain an emergency alarm frame which includes the equipment associated with the automatic fire detection feature. This equipment functions with fusible fire detection wire to sound alarms when any break occurs in this series circuit setup.

12. Floor Alarm

Alarm features in addition to the trouble recorder previously described are provided in a manner similar to other crossbar systems. These alarms consist of fuse alarms, time alarms for the sender link and control circuits, markers, marker connectors, etc. Directing pilot lamps, namely frame aisle pilots, main aisle pilots, floor pilots and exit pilots are provided together with distinctive audible alarms. These lamps and signals are so arranged as to indicate audibly the severity of the alarm condition (major, minor, or power failure) and to show visually the type of failure

TCI Library: www.telephonecollectors.info

(fuse time alarm or test frame alarm) and the aisle location of the individual circuit alarm lamp. Arrangements are provided to extend the alarms from one floor to another.

C. RECORDED ANNOUNCEMENT

The function of this equipment is to provide recorded announcements in the No. 4 Toll Switching System by means of magnetic tape recordings. The heart of the system is a recorder reproducer which consists of a motor driven drum surrounded by a magnetic band with six pairs of heads arranged to form six separate paths around the band. One of each pair of heads is arranged to record or to reproduce and the other to erase a message on the particular channel.

An announcement trunk circuit is provided in conjunction with each of the channels and is arranged to function with the particular switchboard or modified 601 type telephone set used to make the check recordings or to make emergency announcements should the recorder reproducer fail. The output end of the announcing trunk connects to several jacks at the traffic supervisory rack where each channel may be patched to groups of announcement connecting trunks for providing announcements.

Recording may be made on any channel of the system from the end positions of the toll dial (assistance) switchboard or where no switchboard is used, from a 619A type telephone set.

10.4 TYPICAL CALLS

Call through a No. 4A System - The following call is a single one requiring 3 digit translation and is switched to a system requiring MF pulsing.

The call arrives at the No. 4A office over an incoming trunk and leaves over an outgoing intertoll trunk. The incoming trunk may be selected by an outward operator or it may be seized at a distant automatic toll office. The procedure in this No. 4A office is the same in either case.

As shown in Figure 10-24, each incoming trunk has two major appearances in a No. 4A office, one on the incoming frame, used for the talking connection, and one on the sender link frame, used for passing information to the common control equipment.

TCI Library: www.telephonecollectors.info

As soon as the incoming trunk is seized it signals a sender link, (conn. 1) to connect it to an incoming sender for registering the incoming pulses. In order to make this connection the sender link frame through its connector signals a controller connector to seize an idle link controller (conn. 2). The link controller then tests for and seizes an idle incoming sender and closes the cross-points between this sender and the incoming trunk at the sender link frame (conn. 3). This completes the function of the link controller and controller connector and they release from the connection to serve other calls.

As soon as the incoming sender is attached it signals either for the outward operator to begin pulsing or, if the call is from a distant automatic toll office using senders, for the sender in that office to begin pulsing. When the incoming sender (using the pretranslation option) in this office has received and registered three digits it signals the decoder connector to seize an idle decoder (conn. 4). This decoder immediately connects to its home translator (conn. 5). Now the three code digits in the sender are transmitted through the decoder to the home translator and a card coded to correspond to these digits drops. This card contains information for switching the call with 3 digit translation.

The decoder reads the card and signals a marker connector to seize an idle marker (conn. 6). When a marker is seized the marker connector signals the decoder connector to connect the incoming sender to this marker (conn. 7 and 7a). This connection is necessary because the marker has to give certain information to the sender later after the decoder may have been released.

The marker obtains the locations of the outgoing trunks suitable of this call from the decoder and the dropped card. Guided by this information the marker selects an appropriate outgoing trunk through a trunk block connector (conn. 8). This trunk then registers its outgoing frame appearance in the marker.

The decoder and the card also tell the marker that the incoming sender should outpulse on a multifrequency basis for this call, and whether the digits should be outpulsed as received, some digits skipped or converted. When the marker has received all this information it signals the decoder to release.

TCI Library: www.telephonecollectors.info

Now the marker proceeds to set up the talking path from the incoming trunk to the selected outgoing trunk. Through the outgoing frame connector, the marker gains access to the outgoing links and to the junctors (conn. 9). At the same time, the marker gains access to the incoming links through the incoming frame connector (conn. 9a). (The incoming trunk has already registered its incoming frame appearance to the marker over connections 1, 3, 4 and 7a.) The marker then tests the incoming and outgoing links and the junctors to find an idle channel between the incoming trunk and the outgoing trunk. It then closes the crosspoints to establish this channel (conn. 10).

Now the marker passes the outgoing information to the incoming sender and releases from the connection. The sender outpulses the digits through the sender link frame over the transmission path to the outgoing trunk and through to the called office; then the incoming sender and sender link frame release.

The connections in the transmission path remain until a disconnect signal is received. Then all the connections are released and the equipment returns to normal.

The time it takes the common control equipment to switch a call through a No. 4A office is so short that the operating time of each piece of apparatus is measured in milli-seconds. A typical marker operation, for example, with the high speed marker arrangements is about 375 ms.

1. Calls Requiring Outgoing Senders

Outgoing senders are necessary for calls which are switched through a 4A office to offices which receive revertive or call indicator pulsing. This is because incoming senders can outpulse only MF and DP to distant offices.

The outgoing trunks that connect to such offices have an appearance on outgoing sender link frames. These frames are similar to incoming sender link frames.

A call going to an office that required PCI or revertive pulsing needs two senders: an incoming sender to register the call number and an outgoing sender to outpulse the called number.

TCI Library: www.telephonecollectors.info

When an outgoing trunk to an office requiring revertive or PCI pulsing is seized at the 4A office, it signals the outgoing sender link (conn. 11) that an outgoing sender is needed. The sender link seizes a link controller through a controller connector (conn. 12). The link controller tests for an idle sender and attaches it to the outgoing trunk (conn. 13); the link controller and connector then release and are free to serve other calls.

As soon as the outgoing sender is attached, a signal is sent to the incoming sender telling it to pulse the called digits into the outgoing sender. (Incoming senders pulse dc K-P into outgoing senders.) These digits are pulsed from the incoming sender through the incoming and outgoing frames, the outgoing trunk, the outgoing sender link and into the outgoing sender. The incoming sender and sender link then release from the connection. Now the connection consists of the transmission channel, the outgoing trunk, and the outgoing sender. The outgoing sender then outpulses the called digits over the outgoing trunk and releases from the connection.

Figure 10-25 diagrams a typical intertoll connection through a crossbar toll office showing jack, signaling and switching equipment interconnections.

10.5 ELECTRONIC TRANSLATOR SYSTEM

A. INTRODUCTION

With the volume of traffic switched through 4A/4M toll machines reaching higher levels each year, two aspects of the route translation - cost and flexibility - have become increasingly important. Continued use of the electromechanical card translator would exact major penalties in both of these respects. In addition, future network management arrangements would be seriously hampered. Of the choices available for replacement of the card translator, a system using solid state switching devices under stored program control has been chosen and designated the Electronic Translator System (ETS).

TCI Library: www.telephonecollectors.info

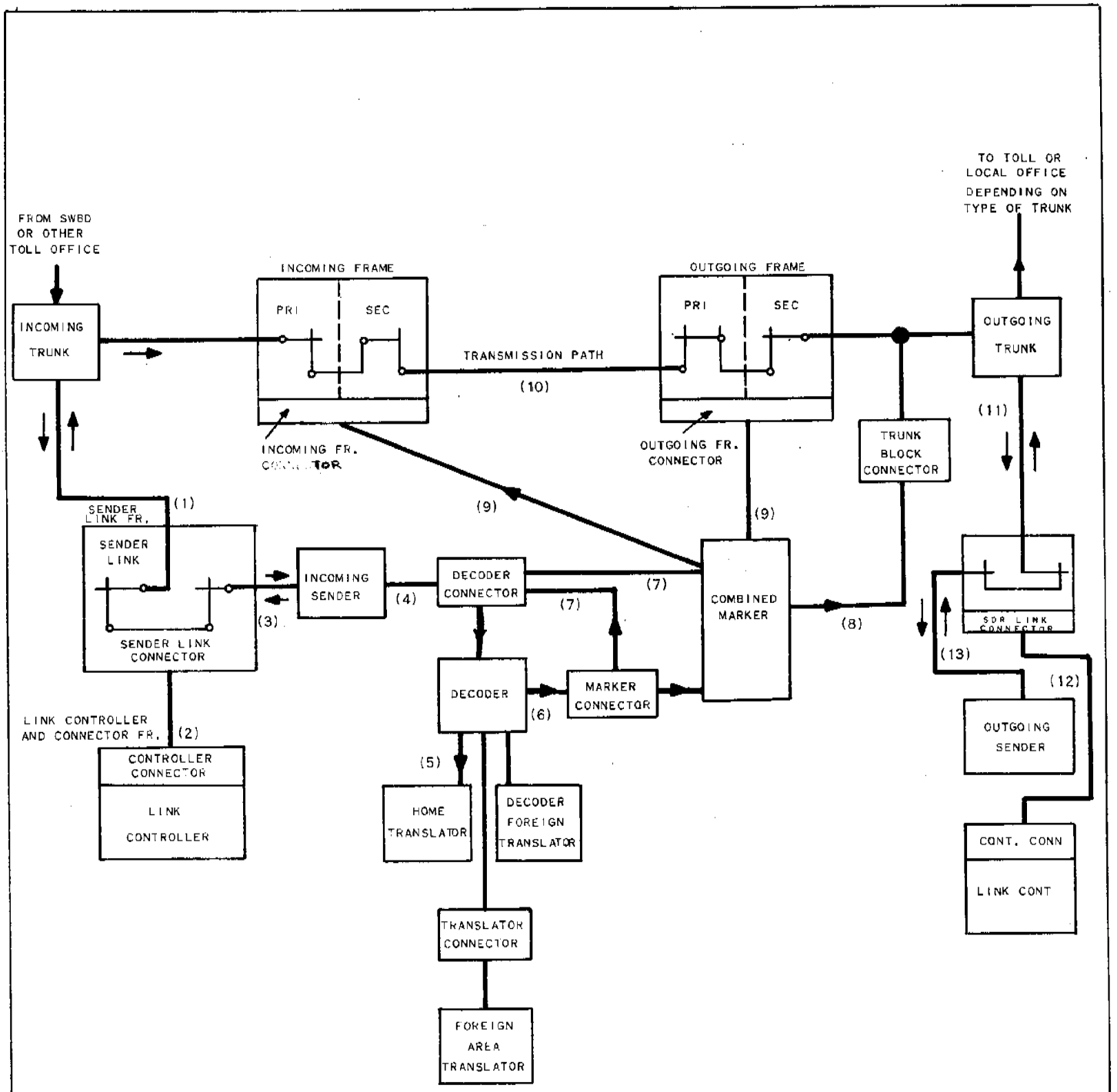

Figure 10-24 - Call Through A Combined Train Office

TCI Library: www.telephonecollectors.info

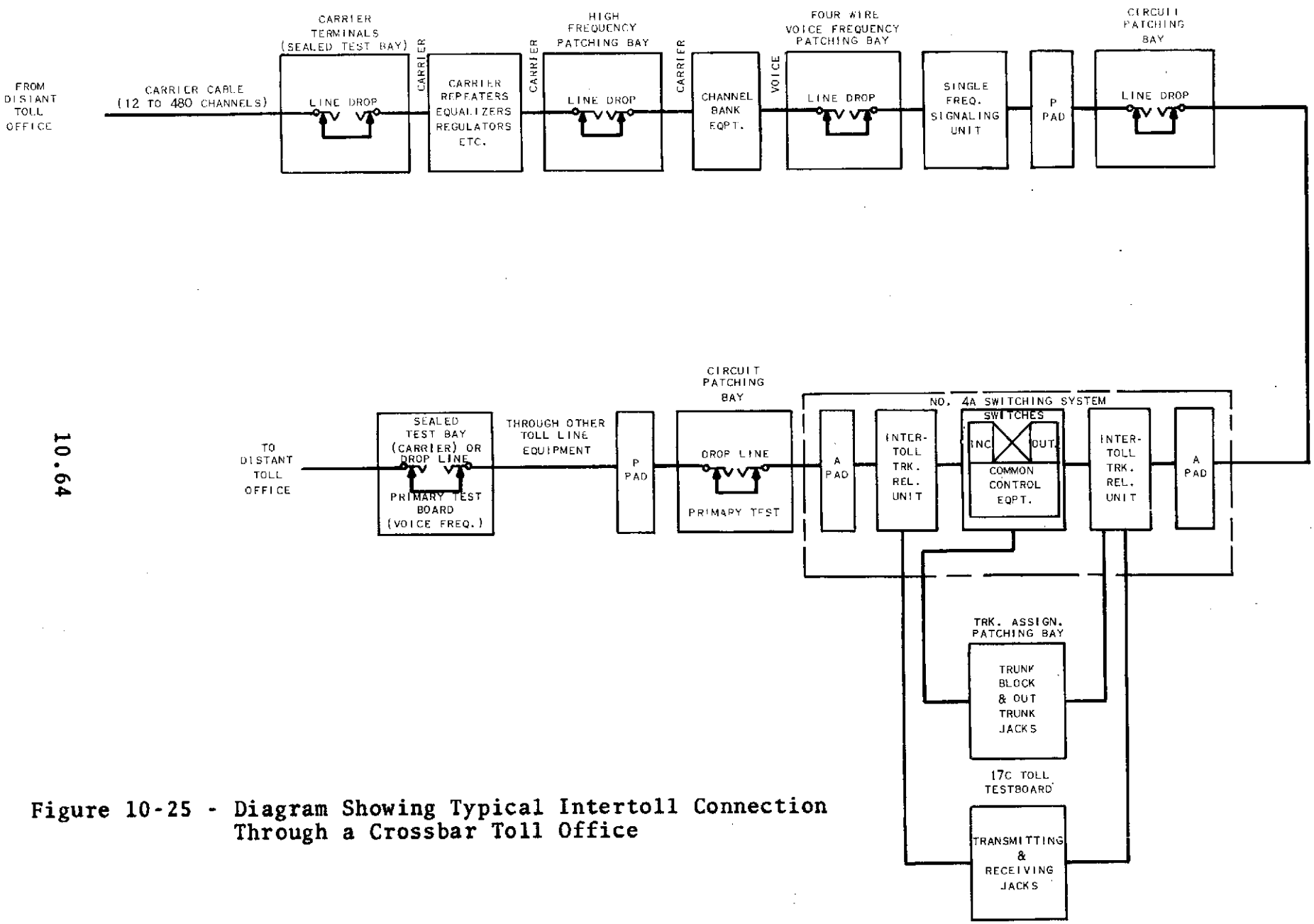

Figure 10-25 - Diagram Showing Typical Intertoll Connection Through a Crossbar Toll Office

TCI Library: www.telephonecollectors.info

The new system will be capable of meeting, increased translation requirements resulting from growth of toll traffic and the introduction of new or changed services, such as overseas transit dialing, private network arrangements, and the new numbering plan. Electronic translation provides a greatly expanded supply of incoming trunk class marks for use in conjunction with address digits and other control inputs, and allows electrical alterability of route translation, to expedite emergency changes and facilitate network management procedures.

B. PRINCIPLES OF SYSTEM OPERATION

The basic component of the ETS arrangement is a Common Systems Stored Program Control (SPC) No. 1A which has been developed concurrently with the Traffic Service Position System (TSPS) No. 1A that will employ the 100B T.S.P. with electronic switching to improve operator assistance facilities.

The solid-state SPC is a fully-duplicated, stored program, digital control system as is the Central Control with associated Program and Call Stores used in the No. 1 ESS. The SPC differs from the ESS Central Control in that it employs a single-type of bulk memory using the new Piggy-back Twister (PBT) module for both program and data storage.

The SPC operates under control of a program of instructions (the soft-ware) which is a set of 40 bit words stored in the memory (Store). The software for each SPC application will include common programs for operating and maintaining the SPC itself. The SPC Processor fetches instructions sequentially from the Store and executes them one at a time. In normal operation, the two Processors will operate in parallel to execute identical instructions fetched independently from the duplicated Stores. One of the Processors assumes active control of input or output and of system activities. High speed matching of information between the two Processors will provide the major means of trouble detection within the SPC.

General input to the SPC is through adapted No. 1 ESS Master Scanners (MS) which are duplicated and contain unduplicated ferror sensors as scan points to monitor the presence of current in connecting circuits and convert information from electromechanical to electronic form.

TCI Library: www.telephonecollectors.info

General output of the SPC is through adapted No. 1 ESS Signal Distributors (SD) and Central Pulse Distributors (CPD) which are duplicated. The SD responds to high-speed signals from the Processor to operate or release magnetically latching wire spring relays. The CPD responds by providing pulses to control solid-state flip-flops for its major function of performing address decoding for units such as the MS and SD.

A Master Control Center provides controls, alarms displays, and associated Program Tape (PT) and Teletypewriter (TTY) units which are necessary to maintain the SPC and peripheral electronic equipment. TTY is also used by the SPC to supplement alarm and status information for maintenance personnel and may be duplicated at a remote location for extended control purposes.

The interface between the SPC and the 4A/4M Crossbar equipment requires several peripheral circuits of both electromechanical and electronic types as shown in the 4A/4M Electronic Translator System diagram of Figure 10-26.

The Decoder Channel Circuit (DCH), consisting of wire-spring relays, provides sender access from Decoder Connectors to the SPC for the dialed code digits and controls selection of an Intertoll or Toll Completing Marker through Marker Connectors by instructions from the SPC. The Decoder Channel also verifies the sender-marker connection and the registration of routing information which the marker receives from the SPC through the marker connector and two peripheral electronic circuits: The Distributor Register (DR) and the Peripheral Function Translator (PFT).

The Peripheral Scanner (PSC) uses ferrod sensors to monitor status, detect bids, and to read input information required by the SPC for call handling. The major circuits scanned by the SPC are the Decoder Channel, Sender Link Controller and Group Busy Relays.

A new Power Distributing Frame (PD) supplied by a 111A Power Plant provides power for all peripheral and SPC circuits.

C. MODIFICATION OF EXISTING 4A/4M SYSTEMS

The major 4A/4M circuits requiring modification are: Decoder-Marker Test and Trouble Recorder, Marker and Decoder Connectors, Sender Link and Connector, Sender Link

TCI Library: www.telephonecollectors.info

Controller, Controller Connector, Incoming Sender and Register Test, Group Busy Relays, and the Marker. The Marker modification is relatively minor and consists mainly of the removal of relays. The Incoming Senders and Trunks do not require any modification.

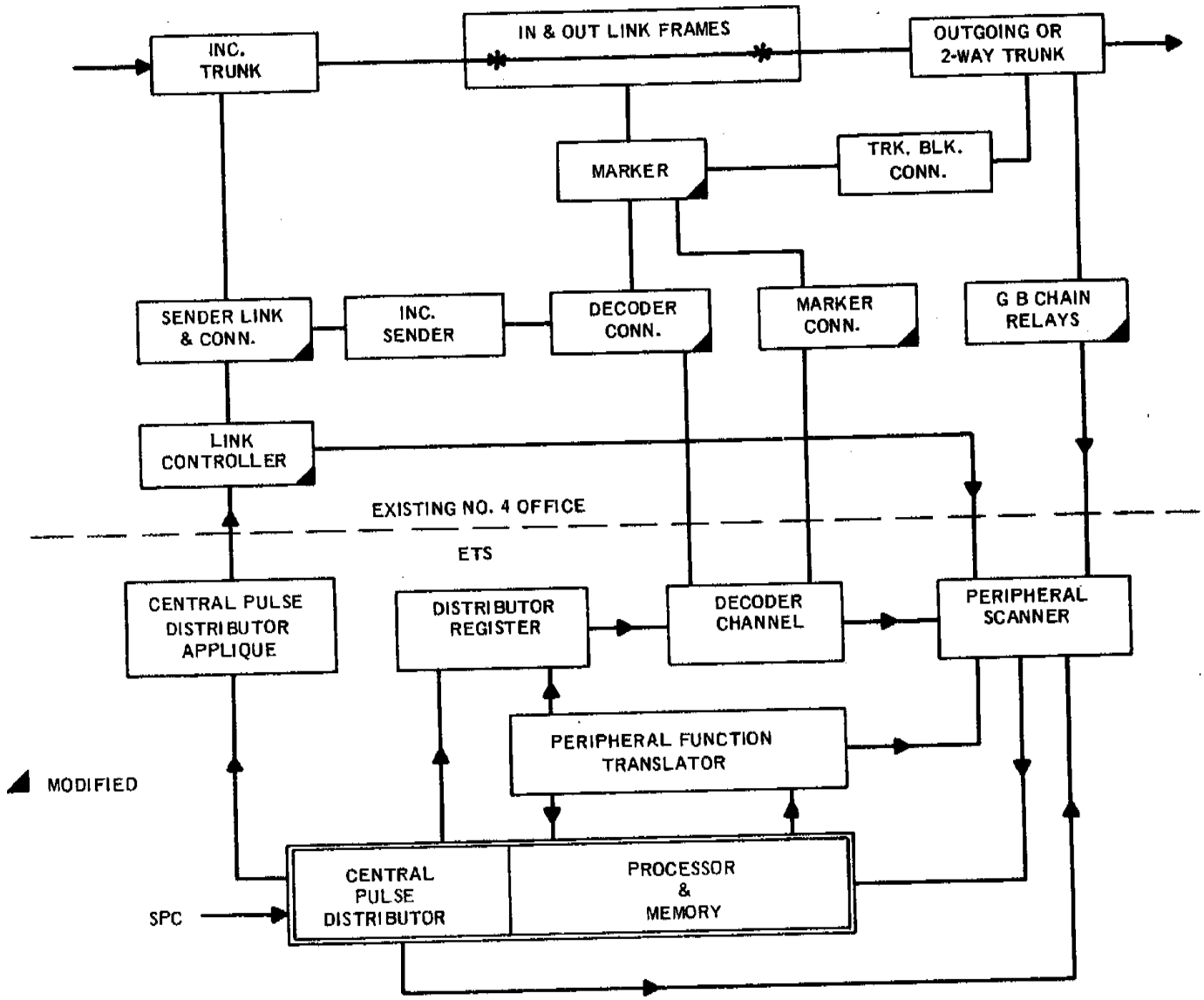

Figure 10-26 - 4A/4M Electronic Translator System

TCI Library: www.telephonecollectors.info

D. BASIC PROGRAMMING CONCEPTS OF THE SPC

The functions to be performed by the SPC and the peripheral units are specified by programs which are stored in the PBT memory. The memory stores both programmed instructions and data. All instructions, and some data, are stored on a relatively permanent basis and are changed as dictated by changes in procedures or service. Some of the data is relatively temporary in nature, since it may be entered into memory, modified, and erased during the processing of a call. The programmed instructions provide the intelligence necessary to instruct the Processor in the many functions required of it under any of the many call situations the SPC may encounter. Instructions can also be referred to as orders or commands.

Data differs from instructions in that it consists of information such as results computation, records of dialed digits, and information as may be required at some time for processing.

The Processor, according to the instructions in the Store, either directly or indirectly controls the operation of every circuit in the system. All commands specifying an operation in peripheral circuits originate within the Processor and all answers signifying the state of circuit points within the system are returned to SPC. Certain instructions result in actions which are entirely confined to the SPC. For example, an instruction or series of instructions may command the Processor to perform logical or arithmetic operations on data currently contained within the SPC. Other instructions may cause the SPC to command a peripheral circuit to perform an operation which results in an answer being transmitted back to the SPC by way of a scanner.

The SPC instructions or orders are of three main classifications:

1. Input - Output Orders: There is one type of input order which calls for scanning a set of as many as 20 input connections and one output order which commands distribution to the peripheral units.

2. General Purpose Orders: There are twelve basic orders that provide the necessary arithmetic and logic operations of the Processor. The arithmetic operations include: subtraction, comparison, shifting, and rotation; and the logic operations are: And, Or, Exclusive Or, and Complement.

TCI Library: www.telephonecollectors.info

3. Maintenance and Miscellaneous Orders: Special orders are provided to implement the necessary fault recognition, diagnostic, and routine test programs.

Application Programming

The application of the SPC for use with ETS requires a program of approximately 7300 words.

The stages of this ETS program consist of control and administration, Sender Link Controller, Decoder Channel, and maintenance programs.

This program will be in common to every ETS installation and is adapted to the local conditions by the data provided by the operating company.

Input and Output Message Manuals are provided to allow communication with SPC from the Master Control Center Teletypewriter.

TCI Library: www.telephonecollectors.info

CHAPTER 11

DIRECT DISTANCE DIALING

11.1 INTRODUCTION

Direct Distance Dialing (DDD) is a term used to designate calls dialed by customers to points outside their local or extended service area. When such calls are dialed by operators, the phrase "Operator Distance Dialing" is used. Distance Dialing (nationwide dialing) has been accepted as an ultimate objective of the telephone industry, since it will usually provide the fastest, most accurate, and most dependable telephone service and at the same time give over-all operating economies. The direct distance dialing plan might more appropriately be referred to as "continentwide" rather than "Nationwide" since it provides for the handling of long distance traffic both within and between the United States and Canada and to Alaska and Hawaii.

Successful operation of the DDD program depends primarily on three factors:

1. A standard nationwide numbering plan.
2. A fundamental plan for automatic toll switching.
3. A method of charging the customer.

The first two requirements will be considered further in this chapter. The third requirement is met by automatic message accounting systems which are covered in Chapter 14.

11.2 THE NATIONAL NUMBERING PLAN

A primary requisite for distance dialing is that each customer be assigned a distinctive telephone number that does not conflict with the number of any other customer in the United States and Canada. It is essential that these numbers be similar in form, convenient to use, and compatible with local and extended area dialing arrangements. This is accomplished by giving each local central office a unique designation which is, nevertheless, similar in form to that of all other offices connected to the nationwide network. With such an arrangement, operators or customers,

TCI Library: www.telephonecollectors.info

wherever located, can use that designation as a "destination code" to reach the required office through the dial switching network. All offices, in effect, become a part of one huge multioffice city with each office having its own distinctive identity for routing purposes. The designations selected, readily understandable and convenient to use, have reduced the number of misdialed calls to a minimum. The result has been a savings in circuits and switching equipment, as well as improved customer relations. On each misdialed call the subscriber must call an operator to avoid being charged for the call.

The numbering plan adopted in 1947 required a maximum of 10 digits and was expected to last beyond the year 2000. The first 3 digits are the "area code" and the next 3 are the "office code." Together, they comprise the required unique designation for each central office. The remaining 4 digits constitute the "station number" of the telephone served from the particular office. The 3-digit office code plus the 4-digit station number make up the 2-letter 5-numeral (2-5) customer's number listed in the telephone directory.

TABLE 11-1 INITIAL NUMBERING PLAN

Listed Directory Number		
Area Code	Office Code	Station Number
X X' X"	L L N	N N N N

Notes:

Where L = Any letter except Q or Z
N = Any numeral from 0 to 9
X = Any numeral from 2 to 9
X' = 0 (zero) or 1
X" = Any numeral from 0 to 9 when X' = 0
Any numeral from 0 to 9 except 1 when X' = 1

The United States and Canada have been divided geographically into numbering plan areas, each of which is assigned a distinctive 3-digit designation called the area code. Calls between numbering plan areas (foreign area

TCI Library: www.telephonecollectors.info

calls) in general, require dialing the code of the area in which the called station is located as well as the called customer's listed telephone number. Home area calls, which originate and terminate within the same area, require dialing only the called customer's listed number, which consists of the office code and the station number. In this geographical division of numbering plan areas, borderlines between states and between Canadian Provinces have generally been used as area boundaries. Since, as will be shown later, only about 540 central offices can be served in a numbering plan area, it was necessary to divide the more populous states and provinces into two or more areas.

In fixing the intrastate numbering plan boundaries of subdivided states, effort was made to avoid cutting across heavy toll traffic routes to have as much of the toll traffic as possible terminate in the originating area. Also, wherever possible, the boundaries have been set to avoid having central offices in one area be tributary to toll offices in an adjacent area. With the numbering plan areas arranged this way, much intrastate dialing can be kept on a 7-digit basis.

As shown in Table 11-1, the numbering plan "Area Code" consists of three digits. If the middle digit is either a "1" or a "0", the switching equipment will be able to distinguish the area codes from the central office codes, for the latter will always have a letter (corresponding to a numerical digit from 2 through 9) in the middle position. Accordingly, the area codes consist of three digits with either a "1" or "0" in the middle position; e.g., 516, 201, 607, etc.

There are 80 possible combinations with "0" in the middle (called X0X codes), digits "2" to "9" in the first position, and all digits "0" to "9" in the third position. It is not practical to use either "1" or "0" for the initial digit of the area code since many customers dial "0" to reach the operator, and an initial "1" is either used for service or toll codes, or the local dial equipment is arranged to ignore it since it may be a preliminary pulse. Only 72 usable "X1X" combinations are available for area codes since "1" may not be used in the third position because such codes as 211, 411, etc., are used in many places for service codes. There are, then, 152 possible area code combinations of which more than 132 have been assigned. Because of the limited supply, assignment of

TCI Library: www.telephonecollectors.info

area codes must be made on the basis of actual needs Tables 11-2 and 11-3 show the present and proposed numbering plan areas. Assignments are made from the X0X or X1X series without regard to whether the areas are entire states or subdivisions of states, although at one time it was thought that such a distinction might be made.

Any one Numbering Plan Area is limited to about 540 central office codes. The 2-5 Numbering System will theoretically furnish 640 office code combinations. (Eight dial pulls for the first digit times eight dial pulls for the second digit times ten for the third digit; only eight holes on the dial have letters.) In practice, however, there are only about 60 usable letter combinations for the first two digits instead of 64. This is because of the difficulty in finding names to fit the dial pulls 5-5, 5-7, 9-5, 9-7 (5 corresponds to JKL, 7 to PRS, and 9 to WXY). Also, since there is considerable confusion between the letter "0" and the numeral zero, the latter is usually avoided in the central office designation. This leaves us with 60 usuable letter combinations multiplied by nine numerals for a total of 540 codes.

The use of all-numerical central office codes, when preceded by "1" prefix dialing arrangements, increases the number of codes from a theoretical maximum of 640 of the 2L-5N type (about 540 generally usable) to 792.(8 x 10 x 10 minus 8 (N11 service codes) = 792.) The 55, 57, 95 and 97 series, for which no suitable names are available, can be assigned on an all-numeral basis. However, ten of these codes (950-954 and 975-979) are reserved for possible future use for new services. It is planned to change to another series of codes in the future. The 55 office code is reserved for use as the code for a universal distant information number. Also, 844 is reserved for time service, and 936 for weather service.

With the above Name-Numeral Plan (2L, 5N), a shortage of numbers arose. Eighty-six of the 152 area codes were assigned when operator nationwide dialing was started in 1947. The remaining 66 area codes were expected to care for many years of growth. However, there has been a telephone explosion in the United States. In the decade 1950 to 1960, while the United States population grew from about 150 million to 180 million people, telephones grew from about 41 million to over 75 million. The rise in population of 30 million people required the addition of 34 million telephones.

TCI Library: www.telephonecollectors.info

TABLE 11-2

NUMBERING PLAN AREAS AND CODES-BY AREA CODE NUMBER

Area Code	Location
201	New Jersey
202	District of Columbia
203	Connecticut
204	Manitoba
205	Alabama
206	Washington
207	Maine
208	Idaho
209	California
212	New York
213	California
214	Texas
215	Pennsylvania
216	Ohio
217	Illinois
218	Minnesota
219	Indiana
301	Maryland
302	Delaware
303	Colorado
304	West Virginia
305	Florida
306	Saskatchewan
307	Wyoming
308	Nebraska
309	Illinois
312	Illinois
313	Michigan
314	Missouri
315	New York
316	Kansas
317	Indiana
318	Louisiana
319	Iowa
401	Rhode Island
402	Nebraska
403	Alberta
404	Georgia
405	Oklahoma
406	Montana
407	Unassigned
408	California
409	Unassigned
412	Pennsylvania
413	Massachusetts
414	Wisconsin
415	California
416	Ontario
417	Missouri
418	Quebec
419	Ohio
501	Arkansas
502	Kentucky
503	Oregon
504	Louisiana
505	New Mexico
506	New Brunswick
507	Minnesota
508	Unassigned
509	Washington
510	4-Row TWX (U.S.)
512	Texas
513	Ohio
514	Quebec
515	Iowa
516	New York
517	Michigan
518	New York
519	Ontario
601	Mississippi
602	Arizona
603	New Hampshire
604	British Columbia
605	South Dakota
606	Kentucky
607	New York
608	Wisconsin
609	New Jersey
610	4-Row TWX (Canada)
612	Minnesota
613	Ontario
614	Ohio
615	Tennessee
616	Michigan
617	Massachusetts
618	Illinois
619	Unassigned
701	North Dakota
702	Nevada
703	Virginia
704	North Carolina
705	Ontario
706	Unassigned
707	California
708	Unassigned
709	Newfoundland
710	4-Row TWX (U.S.)
712	Iowa
713	Texas
714	California
715	Wisconsin
716	New York
717	Pennsylvania
718	Unassigned
719	Unassigned
800	Inward WATS
801	Utah
802	Vermont
803	South Carolina
804	Unassigned
805	California
806	Texas
807	Ontario
*808	Hawaii
*809	Bermuda and Caribbean Islands
810	4-Row TWX (U.S.)
812	Indiana
813	Florida
814	Pennsylvania
815	Illinois
816	Missouri
817	Texas
819	Quebec
901	Tennessee
902	Nova Scotia and Prince Edward Island
903	Northwest Mexico
904	Florida
905	Unassigned
906	Michigan
*907	Alaska
908	Unassigned
909	Unassigned
910	4-Row TWX (U.S.)
912	Georgia
913	Kansas
914	New York
915	Texas
916	California
917	Unassigned
918	Oklahoma
919	North Carolina

*Not reachable by customers - operator dialing only.

TCI Library: www.telephonecollectors.info

TABLE 11-3

NUMBERING PLAN AREAS AND CODES-BY GEOGRAPHICAL LOCATION

Numbering Plan Area	Area Code
Alabama	205
Alaska	907
Arizona	602
Arkansas	501
California	209
California	213
California	408
California	415
California	707
California	714
California	805
California	916
Colorado	303
Connecticut	203
Delaware	302
District of Columbia	202
Florida	305
Florida	813
Florida	904
Georgia	404
Georgia	912
Hawaii	808
Idaho	208
Illinois	217
Illinois	309
Illinois	312
Illinois	618
Illinois	815
Indiana	219
Indiana	317
Indiana	812
Inward WATS	800
Iowa	319
Iowa	515
Iowa	712
Kansas	316
Kansas	913
Kentucky	502
Kentucky	606
Louisiana	318
Louisiana	504
Maine	207
Maryland	301
Massachusetts	413
Massachusetts	617
Michigan	313
Michigan	517
Michigan	616
Michigan	906
Minnesota	218
Minnesota	507
Minnesota	612
Mississippi	601
Missouri	314
Missouri	417
Missouri	816
Montana	406
Nebraska	308
Nebraska	402
Nevada	702
New Hampshire	603
New Jersey	201
New Jersey	609
New Mexico	505
New York	212
New York	315
New York	516
New York	518
New York	607
New York	716
New York	914
North Carolina	704
North Carolina	919
North Dakota	701
Ohio	216
Ohio	419
Ohio	513
Ohio	614
Oklahoma	405
Oklahoma	918
Oregon	503
Pennsylvania	215
Pennsylvania	412
Pennsylvania	717
Pennsylvania	814
Rhode Island	401
South Carolina	803
South Dakota	605
Tennessee	615
Tennessee	901
Texas	214
Texas	512
Texas	713
Texas	806
Texas	817
Texas	915
Utah	801
Vermont	802
Virginia	703
Washington	206
Washington	509
West Virginia	304
Wisconsin	414
Wisconsin	608
Wisconsin	715
Wyoming	307
Canada	
Ontario	416
Ontario	519
Ontario	613
Ontario	705
Ontario	807
Quebec	418
Quebec	514
Quebec	819
British Columbia	604
Alberta	403
Saskatchewan	306
Manitoba	204
Nova Scotia	902
New Brunswick	506
Newfoundland	709
Bermuda and Caribbean	809
Mexico	
Northwest Mexico	903

TCI Library: www.telephonecollectors.info

Forecasts for 1985 to 1990 predict an equal number of people and phones - 280 million; and by the year 2000, approximately 340 million people may require 600 million phones.

This problem is brought about by new services that require telephone numbers: BELLBOY[R] signaling service, air-ground service, mobile telephone service, military systems and many others.

Centrex, which requires every PBX extension to have a 7-digit number per extension rather than one per PBX trunk, has added many new numbers.

Another new service that requires telephone numbers is data switching over the telephone network. Each data station will require one or two numbers, so additional numbers, office codes and area codes will be needed because of this service.

Overseas Gateway Operator Dialing, which began in March, 1963 with the United Kingdom and the Federal Republic of Germany, is now in operation with twelve points as follows:

New York Gateway	Oakland Gateway	White Plains Gateway
Belgium	Australia	United Kingdom
Denmark	Japan	
France		
Germany		
Italy		
New Zealand		
Netherlands		
Sweden		
Switzerland		

The initial nationwide numbering plan was expected to last beyond the year 2000, but now it appears that will be outgrown by about 1975. The telephone industry in the

TCI Library: www.telephonecollectors.info

United States and Canada has, therefore, adopted a new plan with several times the code capacity of the present one which should last well into the next century.

11.3 THE NEW NUMBERING PLAN

Under the initial plan, procedures varied with different types of offices, however, the new plan, shown in Table 11-4 provides uniform dialing procedures for all types of central offices. The following are also provided:

1. A prefix for customer dialed person to person collect, credit card, and other calls requiring operator assistance. The assigned prefix is "0" (zero).

2. A simplified toll office access code for DDD (Direct Distance Dialed) calls in Step-by-Step central offices. With the present plan, a Step-by-Step central office customer making a DDD call uses a 3-digit access code such as "112" to reach the toll office. The access code may be followed by as many as ten digits giving a maximum of thirteen digits. With the new plan, the recommended DDD access code is the single digit "1" and the maximum number of digits is therefore eleven.

3. A prefix to prevent local intended calls from reaching toll points in error in cities using common control type switching systems which store and process the dialed digits like No.1 and No. 5 Crossbar. The new plan uses a prefix, "0" or "1" on all toll calls. Hence, a wrong office code digit on a 7-digit local call (no prefix being dialed) cannot convert a local intended call into a toll call.

TCI Library: www.telephonecollectors.info

TABLE 11-4 NEW NUMBERING PLAN

	INITIAL STAGE	ULTIMATE STAGE
HOME AREA DDD	(1) + NNX + XXXX	1 + NXX + XXXX
HOME AREA SPECIAL TOLL	0 + NNX + XXXX	0 + NXX + XXXX
FOREIGN AREA DDD	(1) + NO/1X + NNX + XXXX	1 + NXX + NXX + XXXX
FOREIGN AREA SPECIAL TOLL	0 + NO/1X + NNX + XXXX	0 + NXX + NXX + XXXX

TABLE 11-5 CAPACITY OF NEW NUMBERING PLAN

INITIAL:

AREA CODES	N 0/1X	152
OFFICE CODES	NNX (NAMES AND NUMBERS)	540
	NNX (ALL NUMBER CALLING)	640

ULTIMATE:

AREA CODES	NXX	800
OFFICE CODES	NXX (Less Service Codes)	792

Notes:

N = ANY NUMERAL 2 to 9
X = ANY NUMERAL 0 to 9
(1) INDICATES THAT THE PREFIX MAY BE USED IN COMMON CONTROL AREAS BUT MUST BE USED IN SXS AREAS.

A. Requirements

The new plan was designed to meet the following requirements:

1. Capacity. Additional capacity is a basic requirement. It could be extended for a few years beyond the expected exhaust date with modest changes in the present plan but underestimations have led to

TCI Library: www.telephonecollectors.info

difficulties in the past. It is more sensible to set up a large capacity plan that will last well into the next century. The 800 area codes provided by the new plan are considered adequate for North America. It leaves the door open for arrangements such as doubled prefix digits which will allow the plan to grow into the ultimate desirability, a world wide plan.

2. Programmable. A plan that would require a simultaneous nationwide switch from the existing to the new would be completely impractical. Apart from the large costs of such a cutover, the co-ordination of work in thousands of central offices could not conceivably be handled without major difficulties and service interruptions. The plan adopted can be implemented in easy stages.

3. No Modification of Customers' Equipment. The chief objection to modifying equipment, such as telephones on customers' premises, is cost. One which has been discussed is the use of specially designated buttons on dials and on keysets proposed to replace dials, which customers would push instead of dialing prefix digits such as "0" or "1". Other changes have also been suggested, but costs have prevented adoption of any of these ideas as a requirement of the new plan.

4. Customer Acceptance. It was felt that a plan that was essentially an extension of the present plan would be more readily accepted by users than a radically new plan. Such a plan would also be more desirable from a customer education standpoint.

All existing telephone switching systems, both local and toll, with the possible exception of step-by-step intertoll equipment, will need to be modified.

B. Modifications

All common control local systems must be modified to enable them to do the following:

1. To register the prefix "1" or "0" and to signal the translating equipment which prefix has been received. The prefix will not be sent to the toll office.

TCI Library: www.telephonecollectors.info

2. To check after an initial "0" to see whether more digits are forthcoming. If only "0" is received, the call will be routed to an operator.

3. To route calls selectively on the basis of the prefix and the code which follows.

4. To provide translation capacity for up to 800 area codes and 792 office codes.

5. To determine whether a code is an area code or an office code (according to the number of digits dialed).

6. To block toll calls which are received without a prefix.

The step-by-step local system will require special trunks from the "1" and "0" levels. The "1" level trunk will immediately seize a trunk to the toll office and a sender or register at that office. If the second digit is 2 to 9, it and succeeding digits will be repeated to the toll office equipment and stored there. However, if the second digit is a "1," it will be absorbed, the toll office trunk will be immediately released and the auxiliary selector will accept the third digit and route to a service trunk. This problem will be eliminated when 11X service codes are replaced.

The "0" level trunk will be arranged to distinguish between prefix "0" toll calls such as person to person and collect, and "zero" operator calls by waiting three or four seconds to see if any more digits are to be dialed.

11.4 SWITCHING PLAN

Large volumes of traffic between any two points are generally routed most economically over direct trunks. When the volume of traffic between two offices is small, however, the use of direct trunks is usually not economical. In these cases the traffic is handled by connecting together, by means of switching equipment at intermediate offices, two or more trunks to build up the required connection. The places where interconnections are made are generally known as "switching centers" and the process is referred to as a "switch." "Built-up" connections may involve several switching centers if the originating and terminating locations are a great distance apart. It is important that telephone plant be designed to provide adequate transmission

TCI Library: www.telephonecollectors.info

and service for this multiswitch traffic as well as the large volumes of traffic handled by the less complex direct and single switch connections.

The conditions under which toll traffic will be automatically switched on a nationwide scale are quite similar to those found in large cities with large volumes of traffic between many separate switching centers. Therefore, experience gained in these places was applied to the nationwide dialing job.

The needs of multioffice exchange areas are met by switching and trunking plans that employ a new principle, "automatic alternate routing," to provide rapid and accurate connections with few occasions for repeated attempts. With this principle, a call which encounters an "all trunks busy signal" on the first route tested is automatically and rapidly "route advanced" and offered to one or more alternate routes, in sequence.

In the general toll switching plan, the central office, where customers' telephone lines are terminated, is called an End Office. For reference, it has been assigned the classification "5". Thus, the End Office is a Class 5 office. A Class 5 office may be physically located in the same building that houses an office of higher classification and in some cases the End Office and the toll office functions are performed by one machine. However, the offices are considered as separate entities, and customers' lines are terminated at the Class 5 office only. Figure 11-1 shows how a number of Class 5 offices is grouped on or homed at, a Toll Center or a Toll Point. A Toll Center, Class 4C, is defined as a toll switching location where operators are present to handle inward toll traffic in addition to other normal traffic operating functions. A Toll Point, Class 4P, is defined as a toll switching location where operators, if present, will not handle inward traffic. A Class 4P office may or may not have operators handling other traffic items such as outward, delayed outward, assistance, information, etc. Both the Class 4C and 4P offices have the same importance and rank in the toll switching plan as regards transmission considerations. Class 4 offices are grouped upon, and serve over final routes from, a higher rank toll switching location designated as a Primary Center or Class 3 office. Class 3 offices "home" at Sectional Centers, Class 2, and the latter have final routes to Class 1 offices known as Regional

TCI Library: www.telephonecollectors.info

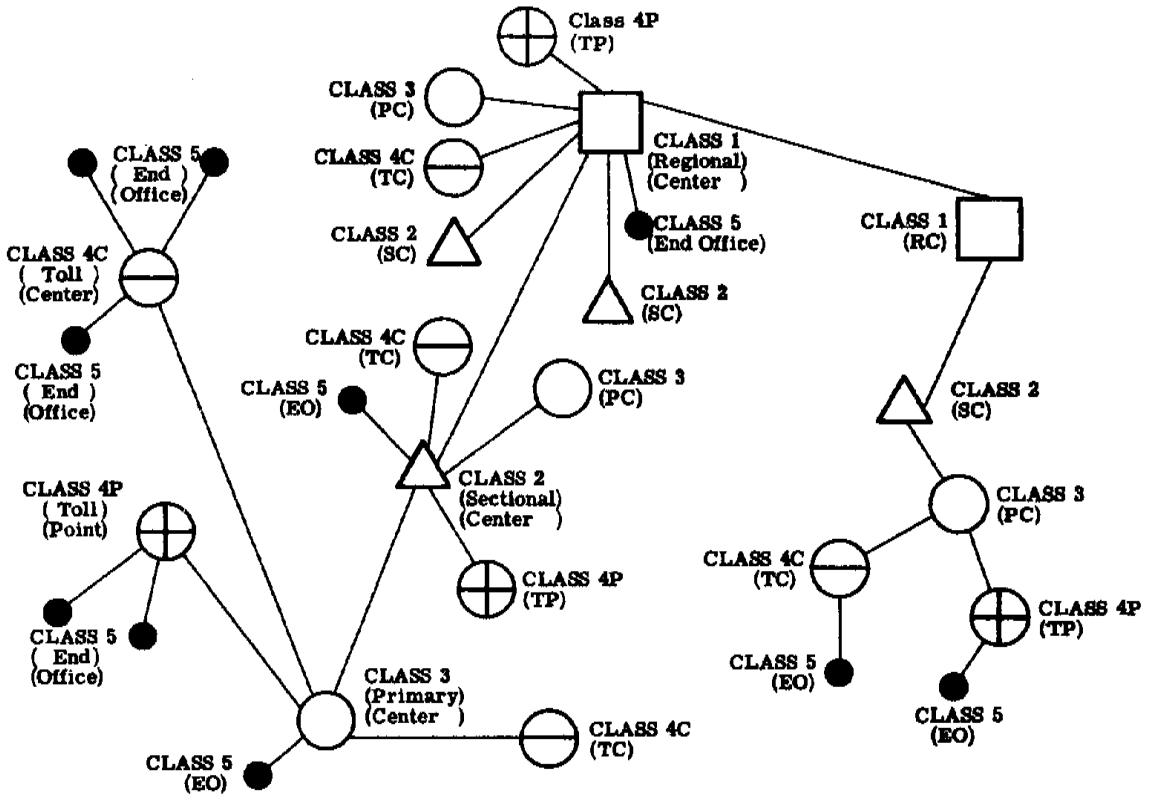

Symbol	Class	Name	Abbreviation
□	1	Regional Center	RC
△	2	Sectional Center	SC
○	3	Primary Center	PC
⊖	4C	Toll Center	TC
⊕	4P	Toll Point	TP
●	5	End Office	EO
—	Final	Trunk Group	

Figure 11-1 General Toll Switching Plan (Basic Principle)

TCI Library: www.telephonecollectors.info

Centers. There are ten Regional Centers in the United States and two in Canada. Each of the Regional Centers (RC) serves a very large area known as a Region. The Regional Areas are listed in Tables 11-2 and 11-3. The Region is subdivided into small areas known as Sections, whose principal switching facility is the Sectional Center (SC). The Section is still a rather large area, and it, too, is further divided into smaller parts known as Primary Areas, each of which is served by a Primary Center (PC). The remaining toll offices that do not fall into the above categories are the Toll Centers (TC) and Toll Points (TP).

The general toll switching plan, as originally conceived, called for one of the regional centers to be designated "National Center" with final trunk groups to and from all regional centers. However, this "National Center" concept has now been abandoned. Instead, final trunk groups are provided between all regional centers in the United States. This does not affect the overall flexibility of the plan since it is possible to route inter-regional traffic via a third regional center on an emergency basis.

It is not necessary that Class 5, 4, or 3 offices home on the next higher ranking office; the complete intermediate final route chain is not necessary. For example, Class 5 offices may be served directly from any of the higher ranking through switching centers. One final circuit group will always be provided from each office to an office of a higher rank. That one higher ranking switching point to which an office is connected over a final group is called its "home" office; the dependent office is spoken of as "homing" on it. The network of final trunk groups will be engineered on a low delay basis so that, on the average, not more than three calls in each hundred that are offered to such a trunk group in the busy hour will find all circuits busy.

Since the general toll switching plan with DDD makes extensive use of alternate routing, the flow of traffic, in many ways, is different from what it was with

TCI Library: www.telephonecollectors.info

ring down operation. Figure 11-2 shows a comparison of intertoll trunk networks theoretically required with:

1. The limited switching under ring down operation, where engineering was on the basis of many inefficient direct groups, and

2. Operator and direct distance dialing utilizing common control equipment and full automatic alternate routing at the principal switching centers.

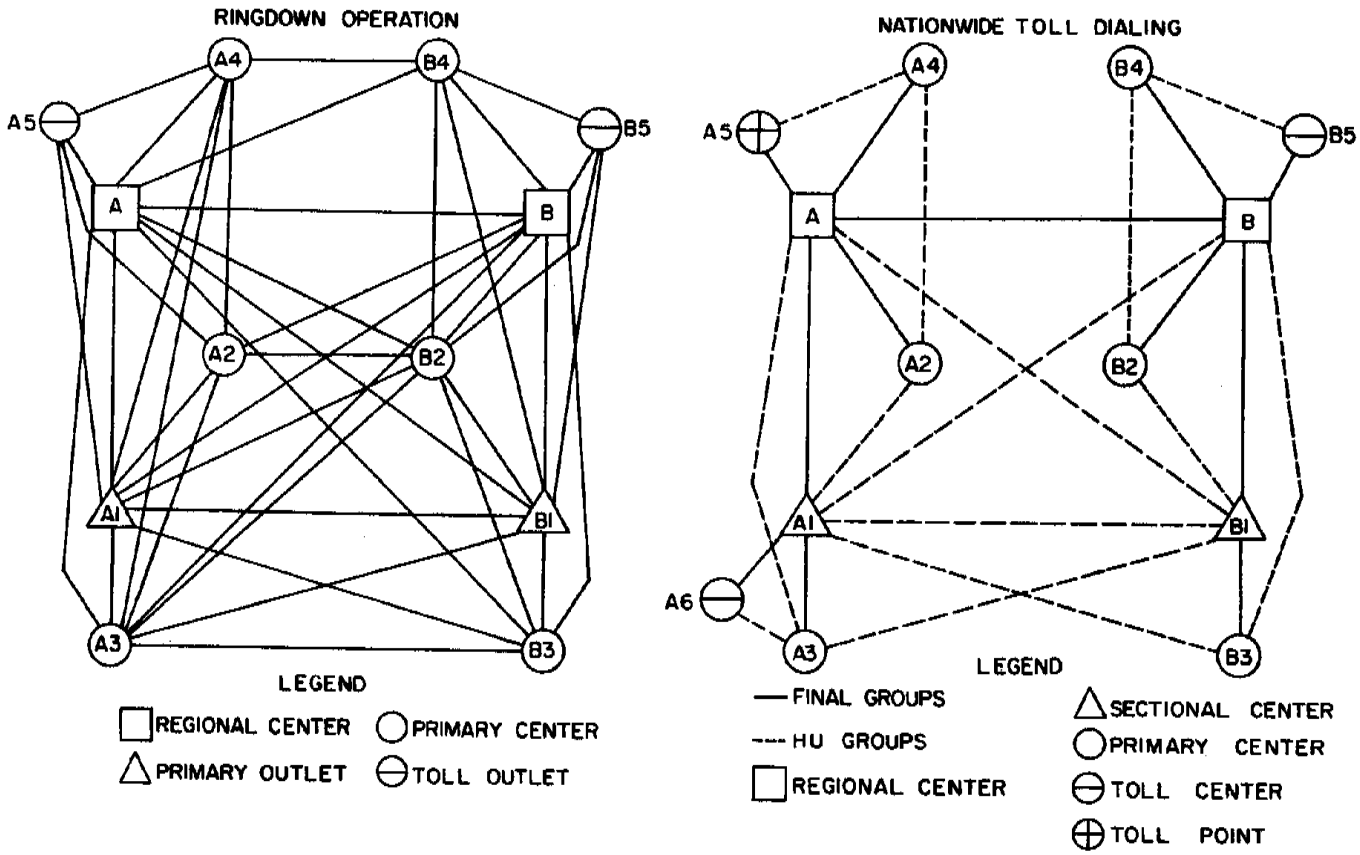

Figure 11-2 Theoretical Intertoll Trunk Network

Intertoll trunk groups, both high usage and final, are usually two-way because with the usual volumes of toll traffic, they are more economical than two groups of one-way trunks.

TCI Library: www.telephonecollectors.info

11.5 CONTROL SWITCHING POINTS

Collectively, the Class 1, 2, and 3 offices (Regional Centers, Sectional Centers, and Primary Centers) constitute the control switching points (CSP's) for nationwide dialing. A control switching point is a key switching location in the nationwide automatic switching network which will have some or all of the following features:

1. Storying of digits received.
2. Variable spilling - deletion of certain digits which are not required for outpulsing and sending forward the required digits.
3. Prefixing of digits when required.
4. Code conversion.
5. Translation of 3 or 6 digits. (Also translation of 4 or 5 digits for TX codes.)
6. Automatic alternate routing.

In addition to these six items, which will be covered in more detail in this chapter, there are certain transmission characteristics which will be covered in a later chapter.

11.6 SWITCHING EQUIPMENT

Nationwide distance dialing places no restriction on the type of dial switching system provided at Class 5 offices. Class 4 offices may use any type of system except panel or No. 1 crossbar. Common control equipment such as registers, or senders, is not essential at these offices although it may be used in many instances to effect economies in switching traffic and to provide uniform dialing procedures. Outward direct distance dialing requires that the Class 5 (End) office be able to send the complete 7 or 10 digit called number to the toll switching system at which it homes. Common control switching equipment can be arranged to do this. If direct control equipment such as step-by-step without senders is used at the Class 5 office, it will be necessary to prefix a toll access code, such as 1 or 112, to direct the call to the toll office.

Class 1, 2, and most Class 3 offices employ common control switching facilities, and have the control point switching features outlined in the previous section. Some Class 3 offices which do not require all the CSP features, employ step-by-step intertoll equipment. The type of switching equipment used at each center is shown in Table 11-6.

TCI Library: www.telephonecollectors.info

TABLE 11-6 TYPE OF SWITCHING EQUIPMENT AT CENTERS

Center	Class	Type
Regional Center	1	4A or 4M toll crossbar, crossbar tandem.
Sectional Center	2	4A or 4M toll crossbar, crossbar tandem, or No. 5 crossbar.
Primary Center	3	4A or 4M toll crossbar, crossbar tandem, No. 5 crossbar, or intertoll step-by-step.
Toll Center or Toll Point	4	Crossbar tandem, No. 5 crossbar, or step-by-step.
End Office	5	Panel, No. 1 or No. 5 crossbar, or step-by-step.

11.7 STORING AND FORWARDING (VARIABLE SPILLING) OF DIGITS AS REQUIRED

One of the main functions performed by common control equipment at control switching points is to store all digits received and send forward as many as required to complete the call.

The called number recorded at a switching point is in the form of NNX-XXXX if the call is to be completed in the same numbering plan area. If the called destination is in another area, the present area code N0X or N1X precedes the 7 digit number. The area codes N0X or N1X and local office code NNX are the digits used for routing purposes and are sufficient to complete the call towards its destination when these codes are received. If the next switching point is not in the numbering area of the called telephone, the complete ten digit number is needed to advance the call toward its destination. If the next switching point is in the numbering plan area of the called telephone, the area code is not needed and seven digits will suffice for completing the call.

For example, suppose a call is originated by a customer in South Bend, Indiana, destined for customer NAtional 4-1234 in Washington, D.C. If it is assumed in Figure 11-3 that the route to Washington is via a switching

TCI Library: www.telephonecollectors.info

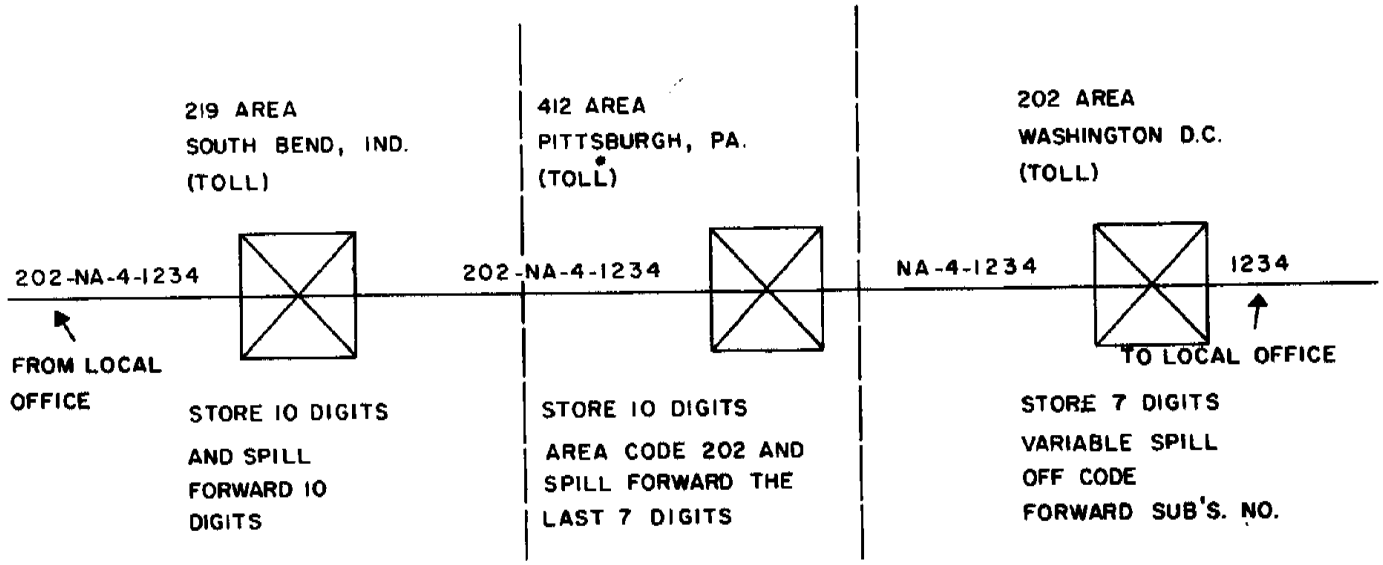

Figure 11-3 Storing and Variable Spilling (3 Digits)

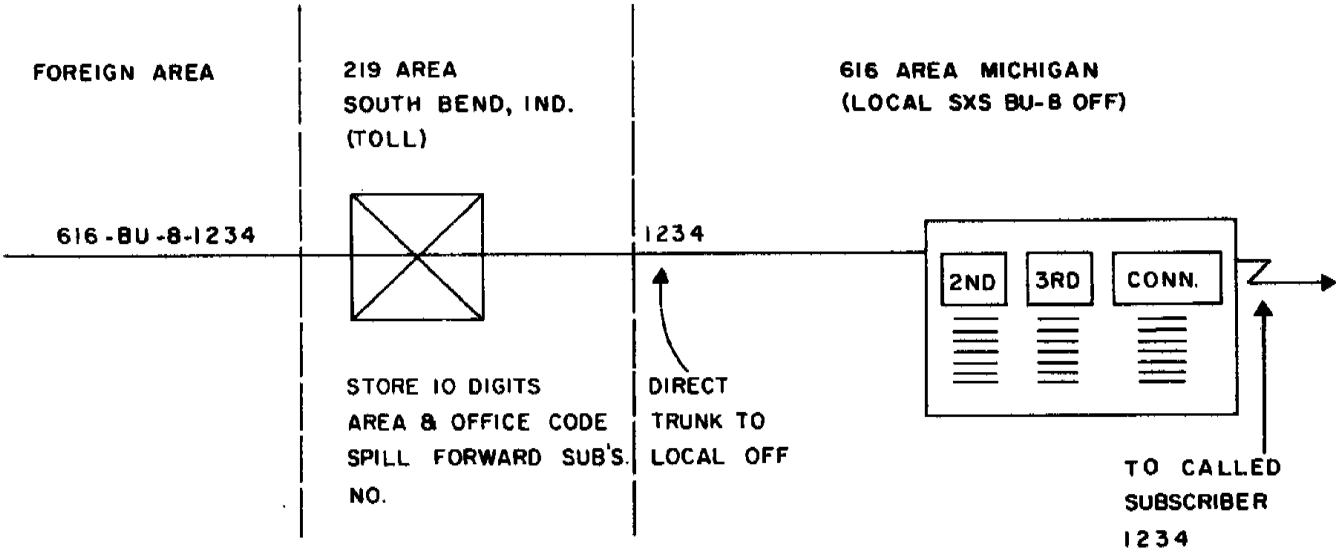

Figure 11-4 Storing and Variable Spilling (6 digits)

TCI Library: www.telephonecollectors.info

center in Pittsburgh, then the crossbar equipment at South Bend pulses forward to Pittsburgh 202-NA 4-1234, 202 being the area code for the District of Columbia. Pittsburgh in turn will delete the area code and send NA-4-1234 to the District of Columbia terminating area.

As another example, suppose the crossbar office at South Bend receives a call from some foreign area destined to a nearby step-by-step end office in Michigan. The crossbar equipment receives and stores a ten digit number comprising the area code and the seven digits for the office code and station number. Assuming that direct trunks to the step-by-step end office in Michigan are available, as shown in Figure 11-4, the area code and office code are deleted and the line number only is pulsed forward. To meet all conditions, the equipment is arranged to permit deletion of either the first three, four, five or six digits of a ten digit number.

11.8 PREFIXING OF DIGITS

In establishing calls, it may be necessary to route a call from one area to another and back to the original area for completion. Such a situation arises on a call from Amarillo to Lubbock, Texas, both in area 915, when the switching equipment finds all of the direct trunks from Amarillo to Lubbock busy, as illustrated in Figure 11-5. The call could be routed to Lubbock via Oklahoma City which is in area 405. A seven-digit number for example MA 2-1234, is received in the crossbar tandem office at Amarillo. Assuming that the call is to be switched out of the 915 area through the 405 area and back to the 915 area for completion, it is necessary for the crossbar tandem office in Amarillo to prefix 915 to the MA 2-1234 number so that the switching equipment in Oklahoma City will know that the call is for the 915 area and not for the 405 area.

Prefixing of digits, Figure 11-6, may also be required when calls are routed through step-by-step primary centers. For example, assume that the common control equipment at sectional center received the seven digit number MA 2-1234, for a call to a customer in the Madison office in the same area. The routing required to complete the call is through a step-by-step primary center to a No. 5 crossbar toll center and then to the Madison office. However, the step-by-step

TCI Library: www.telephonecollectors.info

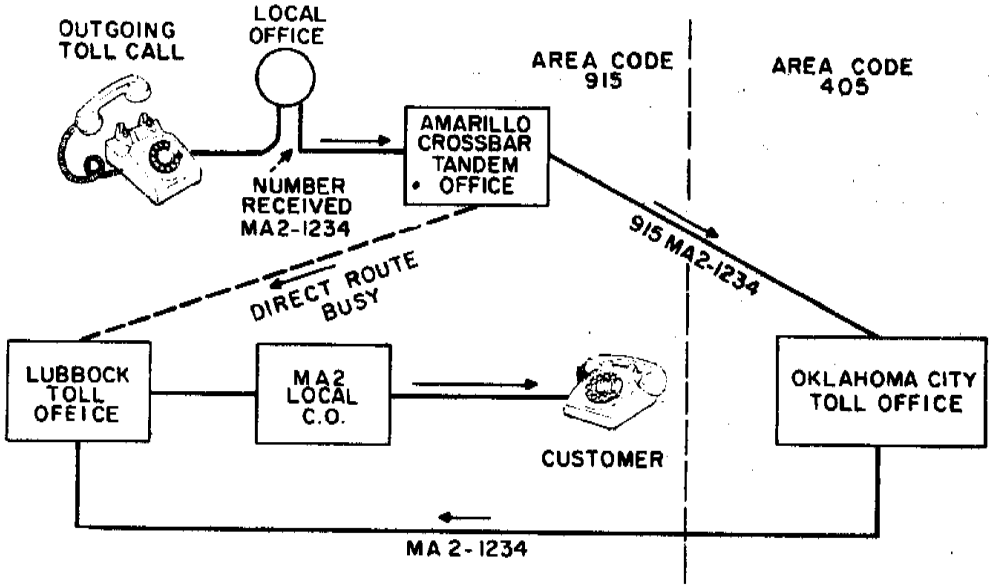

Figure 11-5 Prefixing of Digits

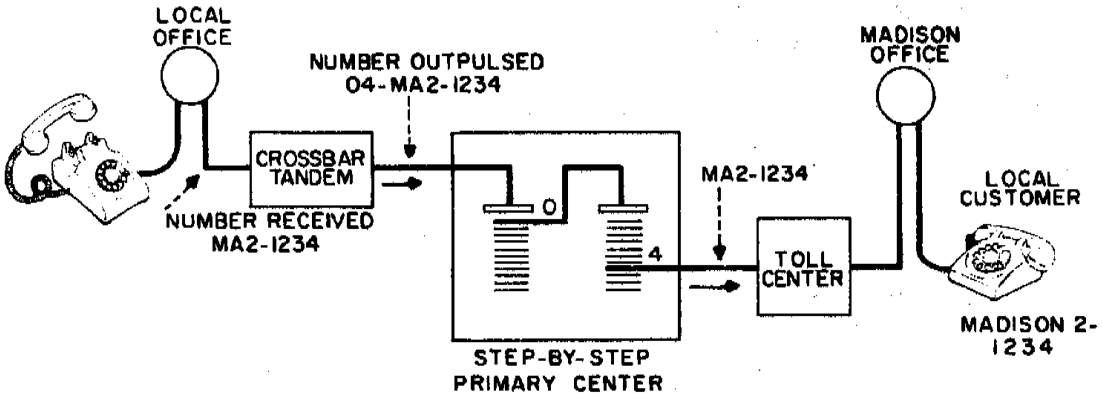

Figure 11-6 Prefixing

TCI Library: www.telephonecollectors.info

switches at the primary center "use up" digits for its switching of the call to the toll center. The common control equipment at the sectional center must therefore prefix digits to accomplish this switching in order to provide the full seven digit number to the toll center for completing the call.

11.9 AUTOMATIC ALTERNATE ROUTING

The nationwide trunking network is so designed that direct trunks, called "high usage" groups, are provided between individual switching offices of all classes where such trunks are warranted by the traffic load. These high usage groups are not engineered to handle all the traffic offered to them during the busy hour, since it is not practical or economical to provide facilities for the busiest five or ten minutes. Traffic offered to a high usage group, which finds all trunks busy, is automatically rerouted to alternate routes consisting of other high usage groups, and finally to a final trunk group for which no alternate route is provided. In intertoll operation there are calls for which no direct trunk groups exist. Such calls are handled over a preferred trunk group, but are automatically rerouted to other trunk groups if the preferred trunks are busy. The characteristic of the common control equipment at a control switching point to select one of several alternate routes automatically, when all choices in the first route are busy, contributes to the economy of the plant and provides additional protection against complete interruption of service when all circuits on a particular route are out of service.

Figure 11-7 and the following discussion illustrate a particular routing pattern that might be involved in completing a call that appears at an end office served from toll center TC_1 destined for an end office served from toll center TC_2. In this example, TC_1 has trunks to PC_1 only, hence the call is routed to that primary center.

At PC_1 the call would be offered first to the high usage group to PC_2. At PC_2 the switching equipment would select an idle trunk in the final group to TC_2 and the call would be routed to the called customer in EO_2. If, however, all the trunks in the first high usage group (between PC_1 and PC_2) had been busy, the call would next be offered to the high usage group between PC_1 and SC_2 (if PC_1-SC_2-PC_2 is the most economical alternate route). At SC_2 the call would have a choice of two routings:

1. Via direct high usage trunks to TC_2, or if they were all busy,
2. Over the two final trunk groups SC_2-PC_2 and PC_2-TC_2.

TCI Library: www.telephonecollectors.info

In the event all the trunks in the group between PC_1 and SC_2 are busy, the call should next be offered to the final group to SC_1. There are available at PC_1 other high usage groups to RC_2 and RC_1. These are intended for terminal and certain other traffic items that must be so routed. Traffic routed via PC_1 should not be offered directly to Regional Centers if there are other lower ranking switching centers in the final route path which have not yet been selected. It is desirable to restrict the switched lead to centers of lower rank even though the service advantages of other alternate route possibilities are not realized. At SC_1 the call would have a choice of four routings in the following sequence:

1. Via the SC_1-PC_2 high usage group,
2. Via the SC_1-SC_2 high usage group,
3. Via the SC_1-RC_2 high usage group, and lastly
4. Via the final group from SC_1 to RC_1.

The routing described above is for one set of assumed conditions and could vary in actual practice to the extent that economics and plant layout would offer different high usage trunk groups.

11.10 CODE CONVERSION

At the present time, some step-by-step primary centers reach other offices by using routing codes that differ from those assigned under the national numbering plan. This arrangement is used to obtain economies in switching equipment of the step-by-step plant and is acceptable with operator originated calls. However, with the introduction of customer direct distance dialing, it is essential that the codes used by customers be in accordance with the national numbering plan. The common control equipment at the control switching point must then automatically provide the routing codes needed by the intermediate step-by-step primary centers. This is accomplished by the code conversion feature of this equipment which substitutes the arbitrary digits required to reach the called office through the step-by-step systems. Figure 11-8 illustrates an application of this feature. It shows a

TCI Library: www.telephonecollectors.info

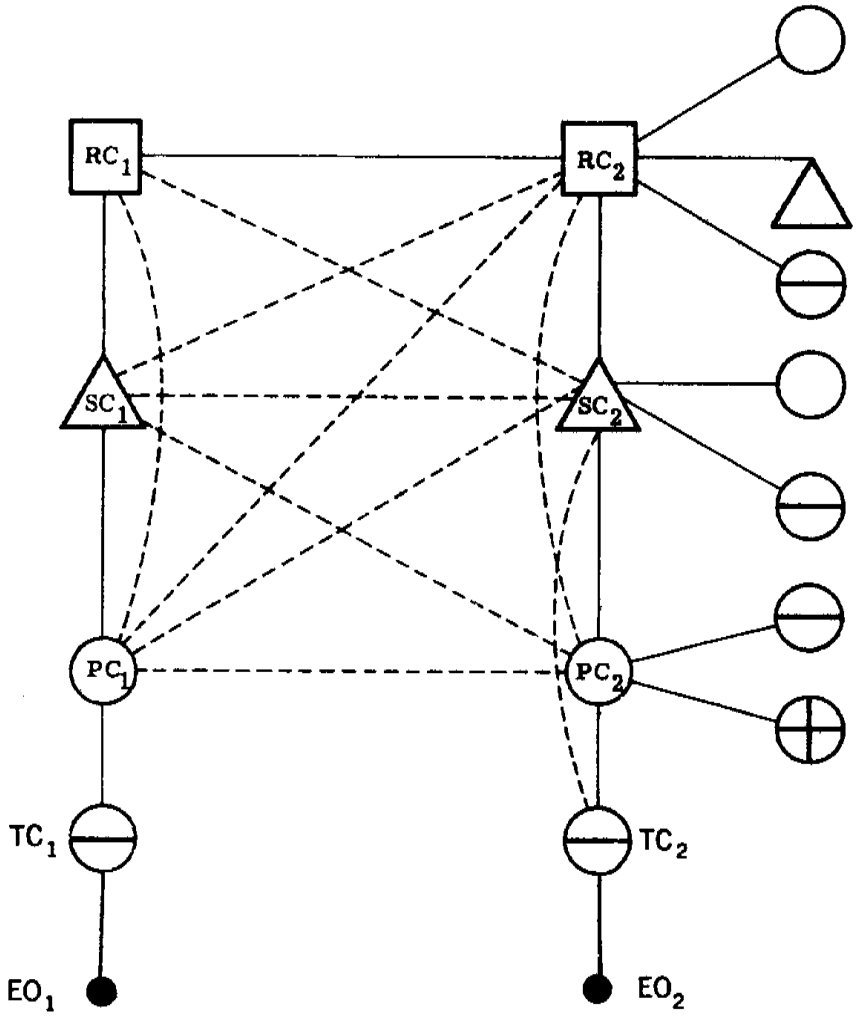

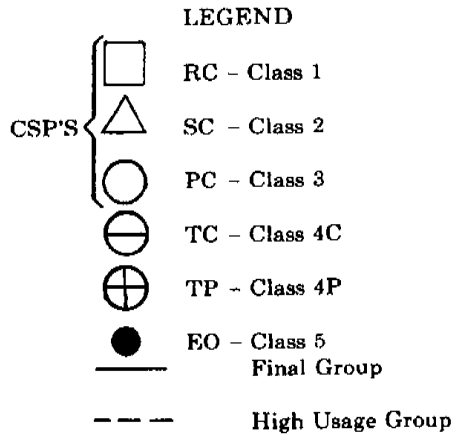

Figure 11-7 Routing Pattern

TCI Library: www.telephonecollectors.info

crossbar tandem office arranged for completing calls through a step-by-step toll center to a local central office, GArden 8, in an adjacent area. A call reaching the crossbar tandem office for a customer in this office arrives with the national number, 218-GA8-1234. To complete this call, the crossbar tandem equipment deletes the area code 218 and pulses forward the local office code and number. If the call is switched to an alternate route, via the step-by-step primary center, it will be necessary for the crossbar tandem equipment to delete the area code 218 and substitute the arbitrary digits 062 to direct the call through the switches at the primary center, since the toll center requires the full seven digit number for completing the call.

11.11 3 AND 6 DIGIT TRANSLATION

3 and 6 digit translation is mainly used when a foreign area can be reached directly or indirectly by more than one route.

Figure 11-9 shows both 3 and 6 digit translation on calls between subscriber "A" in the Oakland, California Area and subscribers "B" and "C" in the Ohio Area.

Upon receiving the details of the toll call from subscriber "A", the Oakland operator keys the area code, 216, followed by the appropriate national office code and numericals, to reach either subscriber "B" or "C".

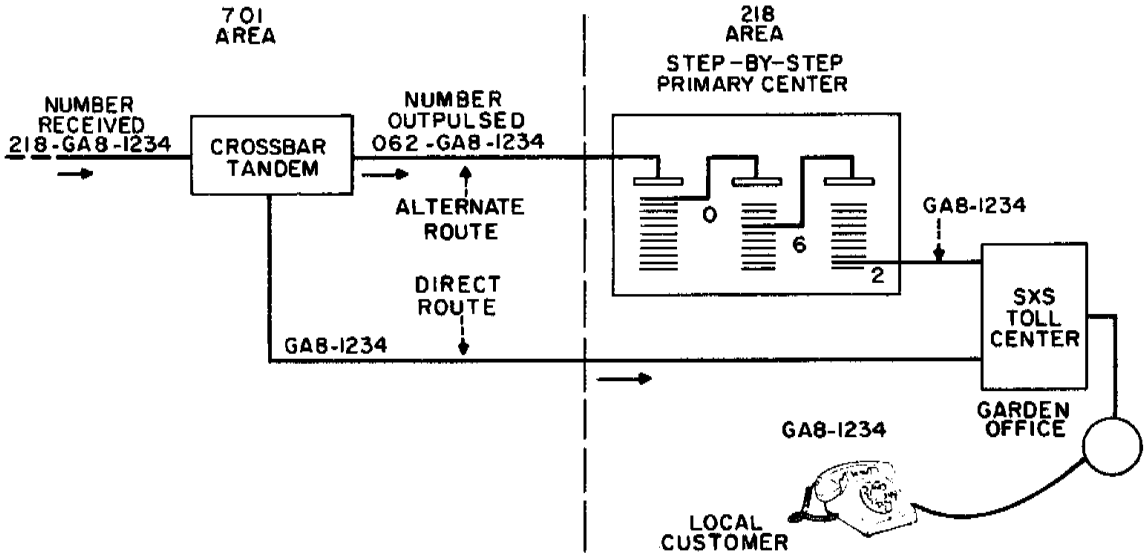

Figure 11-8 Code Conversion

TCI Library: www.telephonecollectors.info

On the call to subscriber "B" in Cleveland, Ohio, the Oakland operator keys 216-MA 2-1234. The Oakland toll office translates the first three digits to select a trunk to Chicago and spills forward 216-622-1234. The Chicago toll office has two trunk groups to the 216 Area (one to Cleveland and one to Canton), and must determine which one shall be used on this call. The Chicago toll center must translate the first six digits. The Area Code, 216, indicates that one of the trunk groups to the 216 Area must be selected. The national office code MA 2 (622) determines that this is the trunk group to Cleveland, since the MAin 2 office "homes" on Cleveland. In this way the Chicago toll center translates the combination of the area code and the NAtional office code to select the trunk group to the Cleveland Toll Center.

The Chicago toll center spills forward 622-1234, skipping the Area Code. This illustrates the variable spill feature. The Cleveland toll center receives 622-1234, selects a trunk to the MAin 2 office, and variable spills forward the digits -1234. The MAin 2 office receives the digits -1234 and connects subscriber "A" to subscriber "B".

On the call to subscriber "C" in an office that "homes" on the Canton toll office, the Oakland toll operator keys 216-623-1234. When the call arrives in Chicago the common control again translates the first six digits and this time selects a trunk to Canton, because the office with national office code MAin 3 (623) is served directly by Canton. The call is then terminated in the same manner as above.

TCI Library: www.telephonecollectors.info

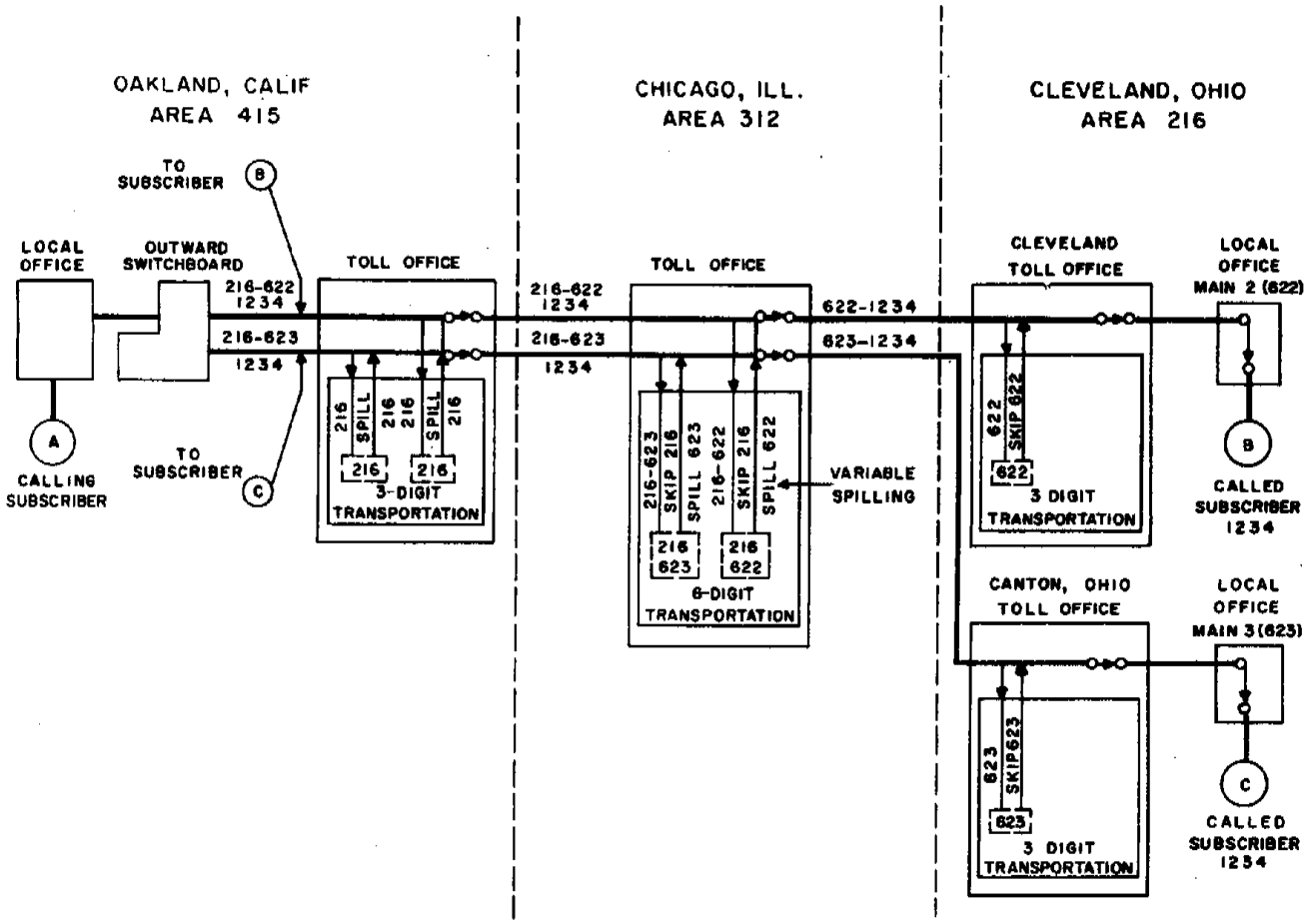

Figure 11-9 3 & 6 Digit Translation

TCI Library: www.telephonecollectors.info

CHAPTER 12

TOLL SWITCHBOARDS

12.1 INTRODUCTION

The complexity of toll switching probably can be attributed to exceptions and varieties rather than to its general nature. Stripped to its extreme simplicity toll switching involves suitable means for subscribers to reach toll operators, for toll operators to reach subscribers, and for toll operators to reach toll operators. The trunking arrangements for these basic problems of access become involved in detail, but not in principle. They become involved because of different types of switchboards and of central offices, because of the varying interplay of economic factors, and because improvements cannot attain immediate universal application. Toll switchboards, simple in their functions, become involved in detail because of the varieties of arrangements that various circumstances make desirable and often imperative in the rendering of good service at a reasonable cost. It is not within the scope of this chapter to penetrate very deeply into the many details of trunking and switchboard arrangements, but it is rather the intention to present a broad picture of the basic concepts.

The No. 3CL Toll Switchboard is the present standard in a long line of switchboards used for manual toll switching. This switchboard offers improved circuitry and wiring in comparison to preceding boards.

For purposes of this test, we shall consider the board as being representative of all toll switchboards and proceed to discuss its various features.

12.2 THE NO. 3CL SWITCHBOARD

The No. 3CL may be arranged for use as a Dial Systems "A" (DSA) switchboard, combined outward toll and DSA, and as an outward, through, inward or delayed call toll switchboard. Provisions are made to handle DSB traffic at a combined toll and DSA position; however, with the continued increase in the numbers of calls dialed directly by the subscriber or operator the need for DSB positions is rapidly disappearing.

TCI Library: www.telephonecollectors.info

A. TOLL SWITCHBOARD ONLY (WITHOUT DSA FEATURES)

When a subscriber wishes to place a toll call he dials a code or is connected manually to a toll operator known as an outward operator who takes the details of the call and attempts to complete it. This call may be completed without the aid of another toll operator, by the use of intertoll dialing facilities, or it may be necessary to enlist other toll operators to assist in completing this call. When the assisting toll operator is located at the toll center where this call terminates, she is known as an inward operator. If in completing this toll call it is necessary to connect two intertoll trunks together, it may be necessary to enlist the aid of an intermediate toll operator, known as a through operator to perform the switching function of connecting the two intertoll trunks together.

1. Outward Positions - The traffic at outward positions will originate over the recording trunks, recording completing trunks, community dial office trunks, manual lines, etc., and be completed over the intertoll trunks. These intertoll trunks may be selected directly in the multiple of the outward position or through a manual, step-by-step or crossbar toll tandem or via concentrating switches.

   Assuming that the intertoll trunk selected terminates at the distant toll center serving the called subscriber and also that this intertoll trunk is of the ringdown type, the ringing signal following the seizure of the intertoll trunk brings in the answering lamp at an inward position at the terminating toll center and when the inward operator answers the outward operator passes the called subscriber's number orally. The inward operator then completes the call.

   Since the outward operator is responsible for timing the call she must remain in on connections completed over ringdown intertoll trunks until conversation starts regardless of whether it is a station-to-station or person-to-person call. On calls completed over dial or key pulsing intertoll trunks, since called party switchhook supervision

TCI Library: www.telephonecollectors.info

is received by the outward operator, the timing can be started by observing the cord supervisory lamp on station-to-station calls. However, on person-to-person calls the outward operator must remain in on the connection to determine that the desired party is obtained.

If the intertoll trunk to the terminating toll center is of the dial or key pulsing type the outward operator dials or keys the necessary digits to select the called subscriber's line. Should the outward operator need to go to the terminating toll center for information work she will dial or key the information operator's code. After obtaining the called subscriber's number from the information operator, the outward operator releases the intertoll trunk and sets up the call again including the called subscriber's number. Switchhook supervision is received from the called subscriber by the outward operator and line or all trunks busy conditions are indicated by flashing supervisory lamps or by tone signals.

If in the process of completing a call it is necessary to switch together two intertoll trunks at some intermediate toll center, the outward operator can accomplish this without the aid of an operator at the intermediate point, provided the necessary dial equipment is available at the intermediate toll center and the intertoll trunk selected by the outward operator is of the dial or key pulsing type. The outward operator in this case dials or keys the additional directing digits where necessary, to accomplish the switching function. Also, if the intertoll trunk from the intermediate toll center to the terminating toll center is of the intertoll dialing type the two circuits in tandem will function as described for the direct circuit dial or key pulsing trunk. However, if the second link of the connection is a ringdown intertoll trunk the two circuits in tandem will function practically as described for a direct ringdown trunk. Also, if it is necessary to dial in an operator at the intermediate point to perform the switching function, the circuits in tandem will function practically as a direct ringdown trunk regardless of whether the second link of the connection is an intertoll dial or ringdown trunk.

TCI Library: www.telephonecollectors.info

2. Inward Positions - At the inward positions the traffic originates from the incoming intertoll trunks and is normally completed to subscribers over toll switching trunks. However in some cases toll subscriber's lines may appear in the multiple of the inward position and calls to these lines are completed directly to this multiple. The toll switching trunks may be of the straightforward type to "B" operators in the local manual or dial units or they may be of the dialing or key pulsing type to SXS, panel or crossbar dial units. In the case of the straightforward trunks the inward operator passes the called subscriber's number orally to the "B" operator. For the dialing or key pulsing toll switching trunks, the inward operator dials or keys the necessary digits to select the called subscriber's line. In either case the inward operator receives switchhook supervision from the called line and flashing or tone busy signals to indicate all trunks busy or line busy conditions. These toll switching trunks can be of the immediate ringing variety in so far as handling traffic from inward positions is concerned as there is no reason for the inward operator to delay ringing the called subscriber once the subscriber's line is seized. However, if the toll switching trunks at the inward positions are multiples of the toll switching trunks used by the delayed call positions, these toll switching trunks will be of the delayed ringing variety and in this case it will be necessary to have the inward position arranged to start the ringing automatically when the inward operator has finished dialing or keying or have the inward operator actually operate the ringing key on each call. It should be noted that where multifrequency key pulsing trunks are used the inward operator must always operate the ringing key.

3. Through Positions - For through positions the traffic originates over intertoll trunks and is completed to other intertoll trunks either directly in the multiple or through a toll tandem or No. 4 toll crossbar system. The incoming traffic may be from ringdown intertoll trunks or from dialing intertoll trunks over

TCI Library: www.telephonecollectors.info

which the through operator's code has been dialed. The through operator completes to ringdown and dial or key pulsing intertoll trunks in the same manner as described for the outward operator. Called party switchhook supervision and flashing busy signals are received by the through operator if the intertoll trunks to the called party are of the dial or key pulsing type. However, this supervision is not transmitted beyond the through operator's cord. If the incoming intertoll trunk from the originating operator is of the intertoll dialing type, the through operator receives answer and disconnect supervision from the originating operator and these two operators can recall each other by operating their ringing keys. Where the outgoing intertoll trunk is of the ringdown type no called party supervision is received. Likewise, no plug supervision is received by the through operator if the incoming intertoll trunk is of the ringdown type. Under this condition it is the responsibility of the outward operator to ring at the finish of conversation so that the through operator will know when to disconnect such a connection.

4. Delayed Call Positions - When an outward operator encounters a delay in completing a call, the calling subscriber is dismissed (if waiting at the telephone) and the ticket forwarded for final handling to a team of operators whose function is to complete such calls. These operators have access to the same outgoing intertoll trunks and toll switching trunks as the regular outward operators and complete over these outgoing paths in the same manner. The switching trunks are arranged for controlled or delayed ringing to enable the operator to seize the subscriber's line but delay ringing his bell until the call has been completed to the called subscriber. Also some of these controlled ringing switching trunks are arranged for coin control to handle the delayed traffic to coin box lines.

TCI Library: www.telephonecollectors.info

The delayed call positions are also used for completion of incoming reverse charge calls to coin box lines. When the distant operator determines that the called line to which the call is to be charged is a coin box line (such information is obtained from the information operator at the terminating toll center) she reaches a delayed call operator at the terminating toll center and passes the details of the call. The delayed call operator then reaches the called line over a toll switching trunk arranged for coin control. The timing and collecting for such calls are the responsibilities of the delayed call operator.

On person-to-person calls, if the called party's line is available but the particular person cannot be reached, the calling party may request the outward operator to have the particular person call the calling party as soon as available. Under such conditions the outward operator leaves word for the wanted person to call a particular operator who is identified by a number preceded by the toll center name, such as "N.Y. Operator 11438." The number is the identity of the team of delayed operators to which the ticket has been forwarded. When the particular called party is ready to talk he places his call with his outward operator in the regular manner asking to be connected to the designated operator (N.Y. Operator 11438). The distant outward operator completes this call forward in the normal manner and requests connection to or dials or keys the code for the particular team of operators identified by the number. If the inward operator at the terminating toll center is involved she will complete the connection to the delayed call positions over an interposition or interoffice trunk. If the terminating toll center is served by SXS intertoll dialing system, a dial tandem or No. 4 toll system, the code dialed or keyed by the distant operator will automatically select a trunk to the particular team of delayed call operators. (These trunks are commonly known as "WH" or "TX" trunks.) The delayed call operator then reaches the calling party over a switching trunk and times the call in the usual manner.

TCI Library: www.telephonecollectors.info

An effort is now being made to reduce the work of the ticket operators by requesting the calling party to place the call again later rather than by having the originating operator offer to try again later as has been the practice in the past. This way the original ticket can be canceled and forgotten. On "leave word" calls, the person answering the called number is requested to have the called party call the originating toll center (OTC) operator and is also given the name of the calling party so that he can give complete details to the OTC operator who writes a new ticket without having to look for the original ticket. Eventually the new ticket with the complete call details is matched with the original ticket and the original ticket scratched. It is very desirable to reduce the amount of tickets required to a minimum since the new mark sending method of ticket writing involves the use of data cards which cannot be sent through present pneumatic ticket distributing systems, but must be distributed by messengers instead.

Mark sensing is a method of recording toll calls by means of marks on specially designed card-type tickets. Operators mark the tickets in designated locations which indicate route and dialing codes, called place, the central office, type of calling number, etc. Cards are then processed in a machine that punches a hole represented by each mark. Machines then compute, sort and print customer's toll statements.

Marking is done with a pencil, and the marks have the ability to conduct electricity. When mark sense cards are processed, electrical brushes move down over the bubbles in each column on the card, one in the center, and one near each end of the bubble. When the brushes reach a properly made mark, an electrical impulse passes through the mark between the center brush and either or both of the outer brushes. The machine then senses the mark and translates it intc an appropriate punch which can be read by other machines.

TCI Library: www.telephonecollectors.info

B. COMBINED TOLL AND DSA SWITCHBOARD

At a combined toll and DSA switchboard there is a certain amount of DSA traffic which originates over the recording-completing trunks in addition to the normal toll traffic originated by these trunks. This assistance traffic can be completed over the direct toll switching trunks which are available for handling the toll traffic. However, since direct toll switching trunks to all the local dial or manual units may not be available, facilities are usually made available to the combined toll and DSA operator which will permit the operator to use the normal completing paths used by the dial subscribers for completing this assistance traffic. These completing trunks, known as toll switching trunks, to local SXS selectors for SXS areas, operator's district junctors for No. 1 crossbar areas, operator's completing trunks for No. 5 crossbar areas or operator's districts for panel areas, are of the noncoin immediate ringing type.

In addition to the foregoing, facilities are usually provided at a combined toll and DSA switchboard for handling some or all of the following items of DSA traffic: intercept, verification, sender supervisory (sender monitor and permanent signal), trouble observation and test, coin supervisory, coin overtime, coin zone dialing, official PBX, business office lines, emergency completion to fire and police lines, emergency manual service for selected dial lines, route transfer arrangements and load control lamps. Since most of the above items require specialized handling, they are usually confined to one or two positions at the head end of the switchboard.

Facilities may also be provided for handling call distributing "B" traffic at the combined toll and DSA switchboard. If a separate DSB switchboard is provided, arrangements can be provided whereby the separate DSB switchboard can be closed down during the periods of light load and the light load DSB traffic handled at one or more combined toll and DSB positions along with the normal toll and DSA traffic. Also, if the DSB traffic requirements are too small to warrant a separate DSB switchboard, one or more positions equipped with DSB position equipment can be placed in line with the combined toll and DSA switchboard to provide exclusive DSB positions.

TCI Library: www.telephonecollectors.info

C. DSA ONLY SWITCHBOARD (WITHOUT TOLL FEATURES)

With a DSA only switchboard the toll traffic will be directed to the toll switchboard over the "110" or "211" channel and the assistance traffic to the DSA switchboard over the "0" channel. However, there will be a certain amount of station-to-station or A-B toll traffic which will originate over the "0" channel. This traffic is handled in the same manner as described for an outward operator. The completion of this traffic requires delayed or controlled ringing completing trunks (toll switching) and the method of operation is similar to that at a delayed call position. Assistance traffic and other DSA types of traffic are handled in the same manner as covered for the combined toll and DSA switchboard.

A certain number of calls on which the subscriber should have dialed the Long Distance code but dialed "0" instead, will reach the DSA operator over the "0" channel. These calls can either be turned back and the subscriber told to dial the Long Distance code or operator recording-completing cords and trunks can be provided at the DSA switchboard to extend these calls to the toll switchboard for final handling. The use of these operator recording-completing cords and trunks permits the switchhook supervision of the calling subscriber to be extended to the toll switchboard operator and also permits the toll switchboard operator to recall the calling subscriber without the aid of the DSA operator. Disconnect supervision is given the DSA operator when both the calling subscriber and the toll switchboard operator have disconnected.

12.3 NO. 3CL SWITCHBOARD CIRCUITS

With the exception of the DC key set and MF key set circuits the existing No. 3C switchboard circuits have been retained for use with the No. 3CL switchboard.

A. CORD CIRCUIT

The cord circuit which functions with a common position circuit is a two relay switchboard cord circuit. One relay operating under control of the Talk key controls the switching of the tip, ring, sleeve and lamp leads to the position circuit. (If a dial or key set circuit is used the tip and ring

TCI Library: www.telephonecollectors.info

leads are carried through the dial or key set circuit to the position circuit.) The other relay, which operates under control of the Ringing key switches a separate set of tip and ring leads to the position circuit which are used for ringing and coin control purposes.

With the cord circuit keys normal, the tip and ring leads are connected straight through the circuit without intervening apparatus, and the sleeve circuit consists of 24 volt battery fed in parallel through 1/2 of a 1000 ohm resistor and the respective cord supervisory lamp to the sleeve of the cord. When the cord is connected to a trunk circuit, the sleeve of the cord is connected (in the trunk) through an 1800 ohm winding (or resistor) to ground. The 1800 ohm winding may or may not be shorted to ground through an 85 ohm winding (or resistor). When the 85 ohm winding is connected, there is sufficient current flowing in the cord sleeve circuit to light the supervisory lamp to give "on hook" (lighted lamp) supervision. When only the 1800 ohm winding is connected there is insufficient current in the sleeve circuit to light the lamp and we have "off hook" (dark lamp) supervision. Both the 1800 and 85 ohm windings are usually found on one double wound sleeve relay, although occasionally separate relays are used and also sometimes either may be replaced by a resistor.

B. POSITION CIRCUIT

The position circuit functions with the cord, dial or keyset and grouping circuits. This circuit provides for connecting the cords to the telephone circuits and for performing certain functions with respect to supervision, ringing, splitting, dialing, key pulsing, coin control, transfer, tone removal and number checking. The various individual functions are associated with a particular cord by the operation of the listening key of that cord to the talking position in conjunction, where necessary, with the proper common key.

C. GROUPING CIRCUIT

The grouping circuit for the 3CL switchboard is connected between the position circuit and the operator's telephone circuit. This circuit is arranged for successive grouping of positions within the same line of switchboard from left to right regardless of direction of growth of the

TCI Library: www.telephonecollectors.info

switchboard. By means of a key located in the miscellaneous key and lamp mounting space at the top of the multiple, any position may be grouped with the adjacent position on the right. Any number of positions may be grouped and the telephone set jacks of any one position in the group are effective. This enables an operator to handle more than one position during periods of light load.

D. OPERATORS TELEPHONE CIRCUIT

The operators telephone circuit provides means whereby the toll operator may communicate with subscribers or other operators or monitor on established connections. It is also arranged to permit the toll operator in panel areas to communicate on a number checking trunk and monitor on the regular connections at the same time.

E. KEY SET CIRCUIT

Three key set circuits are available for use with the 3CL switchboard. These are for use where DC key pulsing, MF key pulsing or combined MF-DC key pulsing are required. The 3CL switchboard positions are universally wired such that they may be equipped for any of the above types as required. Thus, it is possible to initially equip a position for DC key pulsing and later convert it to combined MF-DC key pulsing with a minimum of effort and expense.

The DC key set is used where pulsing into DC key pulsing senders is required while the MF key pulsing set is used when pulsing into multifrequency key pulsing senders or when pulsing over outgoing MF key pulsing trunks. Where it is necessary to pulse into both DC key pulsing senders and MF pulsing senders or over outgoing trunks arranged for MF pulsing, the combined DC-MF key set is used. With the combined MF-DC key set, the key set is normally in a DC key pulsing position. When connection is made to a trunk requiring pulsing into MF key pulsing senders or over outgoing trunks arranged for MF pulsing, a mark on the trunk automatically switches the keyset to the MF condition. This trunk mark is 1000 ohms or less to ground on the ring of the trunk.

MF key pulsing trunks that are arranged for operation with MF-DP senders cannot be used with combined MF-DC keysets since these trunks lack the mark necessary to condition the combined keyset to the MF condition.

TCI Library: www.telephonecollectors.info

The tip and ring leads of both front and rear cords which normally connect to the position circuit are looped through closed contacts of relays in the keyset (or dial) circuits to the position circuit. When either the front KP or rear KP key is operated the corresponding relay operates to transfer the tip and ring leads of the associated cord to the keyset circuit as well as a number of control leads to the position circuit. This prepares the circuit for use as soon as a sender attached signal is received on the appropriate lamp.

F. DIAL CIRCUIT

Dialing is provided in small offices only and is arranged for repeated dialing. The No. 3CL switchboard dial circuit is suitable for both local and intertoll dialing. A start dialing lamp is provided in each position when dialing is furnished. This lamp functions as a dial pilot in simple dial operations and as a start dialing signal in connection with intertoll dialing and certain community dial arrangements. A dial key is used to connect the dial circuit with either the front or rear cord on which the operator is working.

G. OPERATOR RECORDING-COMPLETING CORD

Provision has been made for equipping each outward position of the 3CL switchboard with either one or two operator recording-completing cords. These cords are used in conjunction with operator recording-completing trunks for extending mobile radio or other special traffic originating at one operating unit to the mobile service or other operator at another operator unit for final handling.

The operator recording-completing cord circuit is equipped with a single supervisory lamp and a talking key. The two lamps and two talking keys for the two cords per position are mounted on a single "G" type key base located at the left of the position. No provision is made to omit one lamp and one key in those cases where only one cord is provided. The talking key is integrated with the other talking keys on the same 3CL switchboard position so that only one talking key will be effective regardless of how many talking keys are operated.

TCI Library: www.telephonecollectors.info

The operator recording-completing cord is arranged to provide the following supervisory features:

(a) Supervision from the calling subscriber prior to the answer of the mobile service operator.

(b) Through supervision from the calling subscriber to the mobile service operator after the mobile service operator answers.

(c) Flashing and disconnect supervision from the mobile service operator.

H. TEST CORDS (TEST LINES)

Provision has been made for mounting test cords in the head end position, foot end position and in the space assigned to cords Nos. 1 and 2 in the regular outward positions when these cords are not equipped. The test cords, except those located in the blank end position, can be equipped with supervisory lamps if desired. Test trunks are used to connect toll switchboard circuits to the testing equipment at the local test desk or at the toll test board used in locating trouble. The test trunks can also be used to connect toll switchboard circuits to transmission measuring equipment in order to provide facilities for making transmission measurements.

12.4 MONITORING ARRANGEMENTS

The foot end position of a 3CL switchboard lineup can be arranged as a monitoring position. The monitoring circuit provides means whereby an observer may monitor on the telephone circuit of any supervisor or operator. It also provides means for checking the keying accuracy of toll operators completing calls by key pulsing or the dialing accuracy of toll operators completing calls by dialing. This circuit may also be used to check the accuracy of the toll operators in counting incoming calls, more familiarly known as peg count.

The tip and ring leads of the observed telephone circuits are connected in position monitoring jacks at the monitoring position. One jack is provided for each telephone circuit on which monitoring is required.

TCI Library: www.telephonecollectors.info

To observe on a position the observer at the monitoring position inserts the monitoring cord plug into the position monitoring jack desired. This connects her telephone set across the T & R leads of the operator's telephone set.

A. PEG COUNT CHECKING

Peg count checking facilities are available if desired. The arrangement consists of a lever type key, a lamp and a message register mounted in the lower part of the last panel of the switchboard. The other position of the lever type key is used for keyset observing when required. When the observer connects to a line as described above, she hears the verbal operating at the position under observation. When the operator's positional peg count key is operated the observer's peg count lamp lights for the duration of this operation. If the operator's peg count key is properly operated, the observer's register will score along with the regular position peg count register.

B. POSITION KEY MONITORING

Key set observing facilities are generally provided for all 3CL switchboards so that operator keying performance can readily be obtained. With keyset observing, the keyed digits are displayed in front of the observer on a group of indicators located in the last panel of the board. When the lever type key mentioned in the previous paragraph is in the KM position and the monitoring cord inserted in the position monitoring jack, the digits keyed by the operator are displayed on the indicators. All displayed digits remain locked in until the observer restores the key to its normal position or removes the cord from the position monitoring jack.

Each indicator plate has a capacity of four digits. Thus if a maximum of 11 digits were to be keyed, three indicators would be necessary.

A four indicator arrangement for toll use and a two indicator arrangement for combined DSA and DSB use is shown in Figure 12-1. In the four indicator arrangement, the lamps designated with letters at the left of the top indicator function as follows. The "K" lamps indicate the operation of front or rear KP key as designated, "S" is the sender lamp and D is a number checking lamp. The digits keyed by the

TCI Library: www.telephonecollectors.info

operator start at the left of the top indicator and proceed from left to right across the indicator and then from left to right across the next indicator below and so on until all digits keyed have been displayed. At the right of the bottom indicator are two lamps designated by letters "F" which indicates the operation of the start key and "W" which shows registration complete.

In the two indicator arrangement shown when used for DSA keyset observing, the indicators function exactly as described above except the maximum digit capacity is eight digits. For DSB keyset observing, the lamps designated with letters at the left of the bottom indicator have the following functions. "K" shows a call has been connected, "S" is the sender lamp, D indicates operation of the position disconnect key and "R" indicates operation of the reset key. The four digit lamps in the bottom indicator from left to right shows the thousands, hundreds, tens and units digits of the called number and the "W" lamp indicates registration complete. If a "B" office code is required, the extreme right digit of the top indicator is used for this purpose.

C. DIAL MONITORING

Observing is accomplished for positions having dialing features by recording the digits dialed by the operator on a pen register rather than the indicator used for observing key pulsing. When the observed plugs the monitoring cord into a position monitoring jack and operates a dial monitoring key, the digits dialed by the operator under observation are registered on the tape of the pen register which can be read by the monitoring operator.

TCI Library: www.telephonecollectors.info

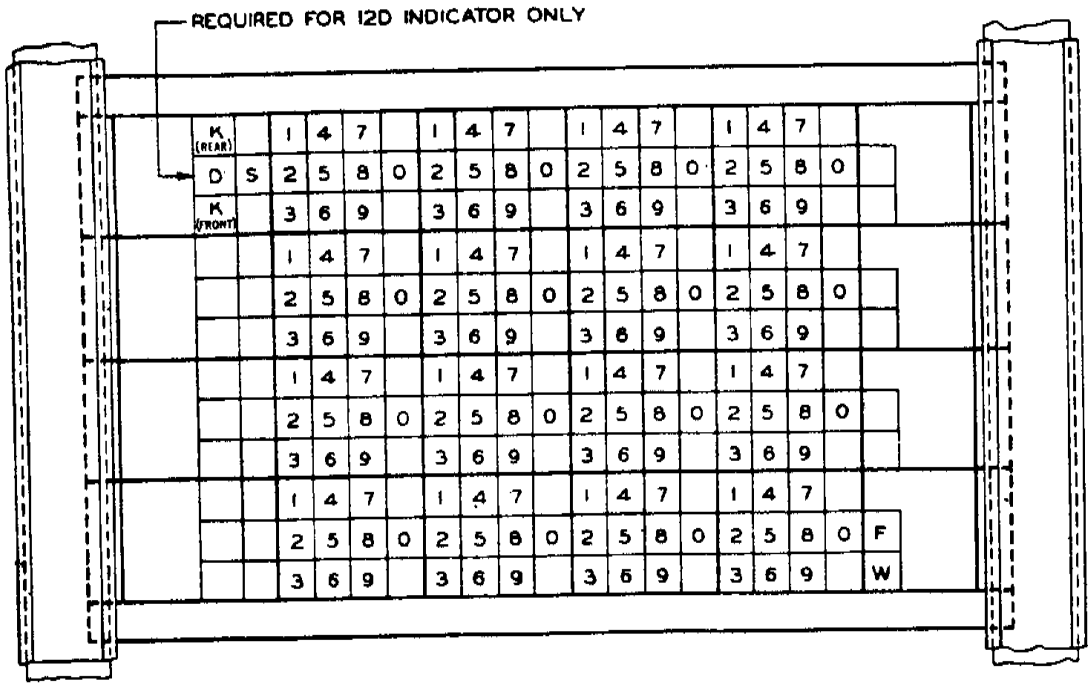

FRONT VIEW

FOUR INDICATOR ARRANGEMENT FOR TOLL BOARD

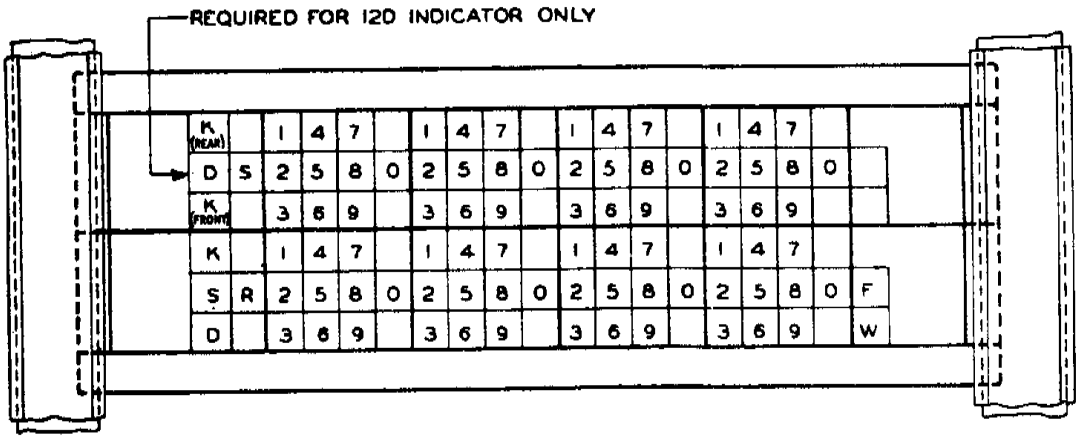

TWO INDICATOR ARRANGEMENT FOR COMBINED DSA & DSB BOARD

FIG. 12-1 NO. 3CL SWITCHBOARD KEYSET OBSERVING INDICATORS

TCI Library: www.telephonecollectors.info

12.5 COIN CONTROL ARRANGEMENTS

The 3CL switchboard is arranged for positional coin control. The operator depresses the positional collect or return key and then connects the correct coin potential to the line or trunk by operating the ringing key associated with the cord which is plugged into the line or trunk. This permits coin potential to be applied to either cord. A typical circuit is shown in Figure 12-2.

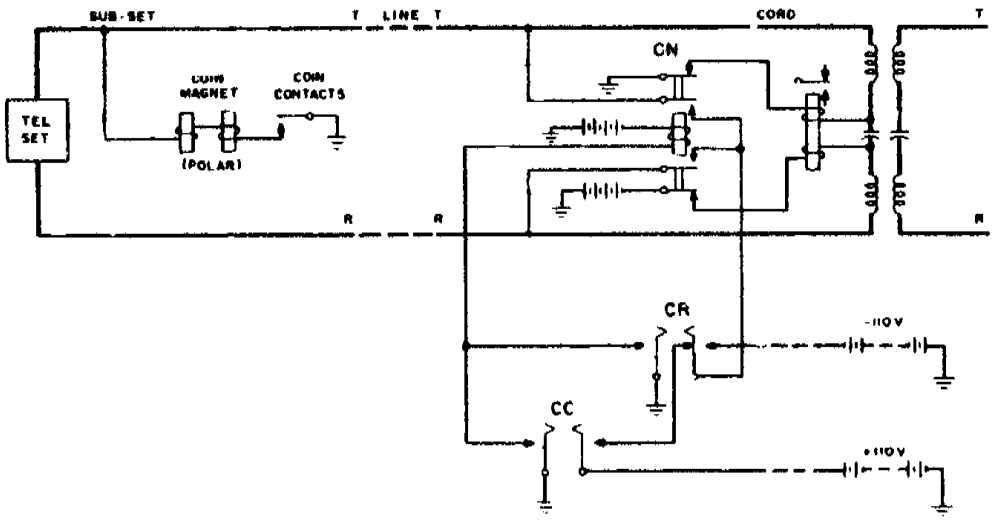

Figure 12-2 Coin Collect and Return Circuit

12.6 MISCELLANEOUS 3CL SWITCHBOARD FEATURES

A. SERVICE ASSISTANT CALL CIRCUIT

The service assistant call circuit provides a means for calling a service assistant. A key is located in the piling rail and a white beehive lamp above the multiple. Operation of the key lights the lamp as an indication to the supervisor handling that position that assistance is required.

TCI Library: www.telephonecollectors.info

B. ROUTE TRANSFER AND MAKE BUSY ARRANGEMENTS

In periods of light traffic it may be desirable to reroute toll traffic originating in a panel, crossbar or SXS office from positions normally handling this traffic to other positions which may be in the same or a distant building. In a panel or crossbar system this is accomplished by operating a key which operates a route relay in the decoder or marker of the panel or crossbar office. The route relay informs the decoder or marker to reroute traffic from the normal toll switchboard to the light load or night position. In a SXS office the operation of the key operates a transfer relay causing groups of trunks to be transferred when idle. The transfer keys are located in the first panel of the switchboard of the office normally handling toll traffic from the local offices involved.

Trunks which are not transferred in a SXS office can be made busy by the operation of a make busy key. Thus, these trunks test busy when they are idle.

C. LAMP TRANSFER AND MAKE BUSY

The Lamp Transfer and Make Busy circuit is used to transfer the lamp leads of one or more groups of circuits to a night or a light load position and when necessary for making busy other groups that are not transferred.

D. NIGHT ALARM CIRCUIT

The night alarm circuit provides an audible and visual signal at a switchboard position when a signal is received on an associated circuit such as an alarm circuit. It is intended for use during light load periods when the maintenance force is at a minimum. The night alarm key, located in the first panel above the multiple, when operated causes an audible and visual signal at the switchboard when any of the associated circuits receive a signal.

E. FUSE ALARM CIRCUIT

A fuse alarm circuit is furnished for the 24 volt and 48 volt battery fuses mounted in the rear of each switchboard position. A lamp is located above the multiple in each position to indicate a failure in that position. A fuse alarm pilot lamp located above the multiple in the first panel signals a failure in any position.

TCI Library: www.telephonecollectors.info

F. LINE AND TRUNK LAMP AND ALARM CONTROL CIRCUIT

Where it is desired to provide for call storing arrangements a line and trunk lamp and alarm control circuit is provided. The control key for this circuit and its associated pilot lamp as well as the alarm key are located in the first panel of the head end position for 7 panel multiple switchboards; in the cable turning section for 6 panel multiple switchboards or above the multiple for 6 panel multiple 6'2" height switchboards.

This circuit is intended for use during periods of heavy traffic load. It provides means for alternately permitting the lighting of all trunk and line lamps associated with waiting calls and then preventing the lighting of any more trunk or line lamps until all calls in the first group have been answered, thereby assuring that no call will be overlooked because of the heavy traffic load.

G. DOOR OPENING CIRCUIT

A door opening circuit may be provided at a position in the toll switchboard lineup by means of which the operator can open the door leading to the operating room. Operation of a key located in the piling rail releases the door latch.

H. EMERGENCY RINGBACK CIRCUIT

An arrangement is available to permit a DSA operator to ring back a calling customer over a recording completing or special service trunk in case of an emergency where the calling number has not been obtained. The circuit is primarily intended for calling back on a line which has originated an emergency call for the police, fire department or an ambulance and then abandoned the call without identifying either the calling station or person.

A nonlocking key located in the piling rail is provided at each position for this purpose. The operator operates this key in conjunction with her regular cord ringing key.

TCI Library: www.telephonecollectors.info

I. PERMANENT SIGNAL CORD

Those positions handling calls coming in on trouble observation and test trunks and permanent signaling holding trunks are equipped with a permanent signal cord. This cord, when plugged into the TST jack of the above trunks, permits the operator to talk, apply standard 20 cycle ringing, reversed 20 cycle ringing or nongrounded 20 cycle ringing to the line. Howler tones can also be applied to the line if so desired. If the howler feature is equipped, a busy lamp is provided with each cord to indicate when the common office howler supply is in use by another permanent signal cord. A supervisory lamp is also provided to furnish subscriber switchhook supervision.

J. NUMBER CHECKING

1. SXS - The regular 3CL cord circuit is used for number checking in SXS areas. The "dial-back" method of number checking is used in conjunction with number checking trunks. The recording completing trunk number and the subscriber's number are dialed over a number checking trunk outgoing to a number checking selector in the SXS office. The number checking selector returns a visual signal to the toll operator indicating whether or not a successful check has been made.

2. Panel - The straighforward number checking arrangement is used for calls from panel areas. It requires the use of separate number checking cord. The toll operator reaches the DSA operator at the panel office over a number checking trunk and verbally requests a check of the number. The DSA operator can then set up a "check" or "no check" condition which returns visual signals to the toll operator.

3. Crossbar Areas - A separate number checking cord is also used for calls originating in crossbar offices. Two methods of number checking tolls from crossbar areas are available.

   If the subscribers number being checked is in a crossbar office being served by a call distributing "B" board, the toll operator

TCI Library: www.telephonecollectors.info

reaches the "B" operator over a number checking trunk via the number checking cord and verbally requests the "B" operator to key the number.

If the subscribers number can be reached by using MF pulsing, the operator operates the front key of her keyset and upon receiving a lighted "sender ready" lamp, keys the subscriber's number over the number checking trunk. A visual signal is returned to the toll operator indicating a "check" OK or "no check" condition. The MF-KP arrangement can be used either where the 3CL switchboard and the crossbar unit are in the same or distant buildings. An arrangement is also available, which enables an operator to DCKP the number checking calls in the same building only. Where combined MF-DC keysets are furnished in the switchboard, DCKP is used for number checking to crossbar units in the same building and MF-KP for crossbar units in other buildings.

Since the 3CL switchboard scheme of number checking requires that the talking key of the regular cord used to answer the recording completing trunk and the talking key of the number checking cord be operated at the same time, the operators telephone circuit is connected in the monitoring condition across the regular cord and in the talking condition across the number checking cord. This enables the 3CL operator to pass the calling subscribers number verbally on straightforward calls or to attach the key set to the number checking cord by operating either KP key and at the same time monitor the regular connections.

K. NUMBER CHECKING LAMP SIGNALS

The lamp signals for number checking as received at the toll switchboard are shown in Table 12-1.

TCI Library: www.telephonecollectors.info

Table 12-1 Number Checking Lamp Signals

Condition	Number Checking Cord Lamp			
	Straight Forward	Key Pulsing Dialing	DCKP	MFKP
1. Plug In	Lighted	Dark	Lighted	Dard
2. Sender Attached and Ready to receive pulses		Lighted	Lighted	Lighted
3. Keying or Dialing		Lighted	Lighted	Lighted
4. Dial Key Released - Key Set Released - (ST) Key Operated		Lighted	Lighted	Lighted
5. O.K. Check	Dark	Dark	Dark	Dark
6. Failure to Check	Flashing	Flashing	Flashing	Flashing

12.7 CENTRALIZED SUPERVISORY CONSOLE

A centralized supervisory console has been developed to permit one supervisor to handle a maximum of 70 operator positions. Two consoles can be multipled to serve the same 70-position unit. If more than 70 positions are to be served by the centralized facilities, the incoming circuits can be multipled to two consoles so that each console can answer 140 operator positions. However, each of the consoles can originate calls to a maximum of 70 positions. The new facilities will enable the telephone companies to use supervisor time more efficiently and at the same time provide the supervisors with more attractive and effective equipment.

A supervisor will use a console which will permit her to:

(a) Answer calls from operators or customers.

(b) Originate calls to any of the 70 operator positions.

(c) Monitor on any of the 70 operator psoitions.

(d) Originate dial calls over a dial central office line circuit.

(e) Originate nondialable calls over a toll subscriber line.

TCI Library: www.telephonecollectors.info

Figure 12-3 shows the new supervisory console.

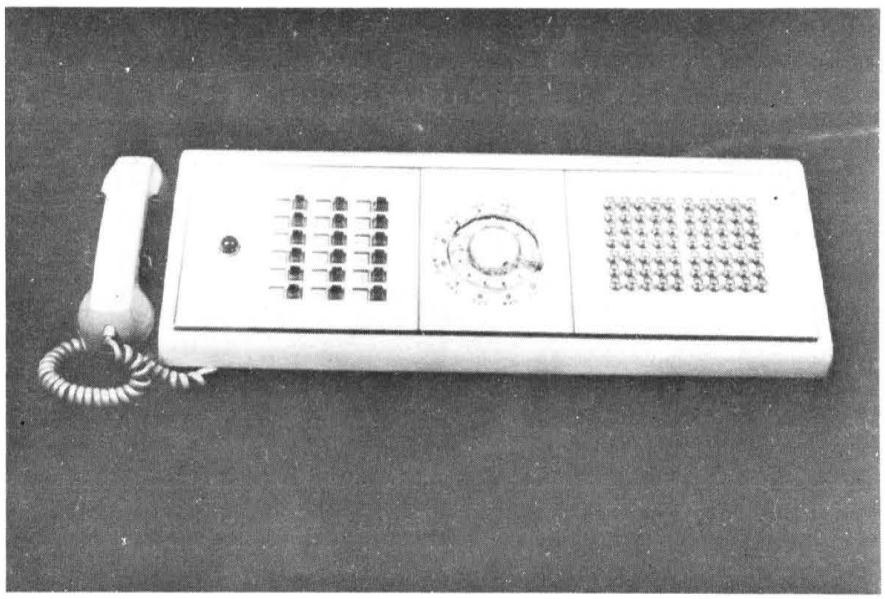

Figure 12-3 Centralized Supervisory Console

12.8 TRUNKS ASSOCIATED WITH TOLL SWITCHBOARDS

Because of the numerous listings of trunks associated with the 3CL switchboard, we shall consider these circuits in groups and give detailed attention to only a few typical circuits. There are several ways in which the trunks can be grouped, such as:

(a) By direction of Traffic (incoming, outgoing and 2-way).

(b) By type of traffic (toll, local).

(c) By type of circuit (toll switching, recording-completing, intertoll, etc.).

TCI Library: www.telephonecollectors.info

A. INTERTOLL TRUNKS

These trunks can be divided into three subgroups consisting of ringdown, automatic, and intertoll dialing trunks. The circuits used in completing a toll call are of two general types known as intertoll trunks and toll connecting trunks. The intertoll trunks are used for that portion of the call extending between Toll Centers (TC) and the toll connecting trunks for the portion of the call between the local office line circuits and the toll switching equipment in the Toll Center which may be of either the manual (switchboard) or machine switching (dial) type.

1. Ringdown Trunks - Ringdown intertoll trunks are the type which, previous to the advent of intertoll dialing, carried practically all intertoll calls. The name "ringdown" derives from the fact that the earliest circuits actually rang down drops located in the switchboards. On present day circuits the ringing current actuates relays which in turn light line lamps to signal the called operator. Either the called or calling operator can signal the other operator during the progress of a call by ringing, in which case the recall signal appears on the cord circuit supervisory lamp and at the end of a call the originating operator again rings as a disconnect signal. Auxiliary trunks can be connected to ringdown trunks to permit intertoll dialing trunks to complete calls to points served only by manual means.

2. Automatic Trunks - Automatic trunks are those trunks which automatically signal the called operator upon seizure by the originating operator. They are mainly used in transferring calls between toll switchboards in the same area and are generally used in pairs, one of which is arranged for rering and the other to repeat the ringing signal. The use of these trunks is restricted mainly to those situations where an outlying toll office does not have access to a full complement of the intertoll trunks appearing in the main toll office. The circuit arranged for rering is used at the outlying office and the one arranged to repeat the ringing signal is used

TCI Library: www.telephonecollectors.info

at the main office. Either operator may recall the other operator by replugging. The use of these circuits has become greatly reduced in recent years since most toll centers, large enough to have more than one toll office, are now equipped with either toll crossbar, crossbar tandem, or #5 crossbar toll offices; and can be reached over tandem trunks from the outlying office, thus enabling the outlying office to have access to all trunks appearing in the automatic office. There are a few other applications of automatic trunks which do not warrant consideration in this text.

3. Intertoll Dialing Trunks - Intertoll Dialing Trunks are those trunks in which the routing of the call is controlled by some type of pulsing. Only those intertoll dialing trunks with an appearance in the toll switchboard itself will be considered in this chapter. The most commonly used circuits are those which have their outgoing appearance in the switchboard and the incoming appearance in the automatic switching equipment. These circuits can also be used for outgoing traffic from the automatic switching equipment where this equipment is serving as a tandem point. These circuits can be either of the dialing DC key pulsing or MF key pulsing type on the switchboard end but must be dial pulsing incoming for use with SXS type intertoll dialing equipment. Trunks which are incoming on an MF pulsing basis must terminate on crossbar toll switching equipment, crossbar tandem or #5 crossbar equipment; those calls directed to the switchboard reach it through auxiliary or incoming trunks or are routed directly to answering jacks in the case of the #5 crossbar office. These trunks are reached by means of outgoing tandem trunks to the crossbar equipment for calls outgoing from the switchboard. The outgoing tandem trunks make all outgoing or two way intertoll trunks, terminated in the crossbar office, available to the switchboard operators.

TCI Library: www.telephonecollectors.info

Incoming traffic is only routed to the switchboard where the called party cannot be reached on a dial basis (manual office's, some CDO's and some nonassociated areas), on TX calls and reverse charge calls or where additional information is required. The bulk of the incoming calls are completed on a dial basis; as a result, the inward traffic on toll switchboards has fallen off greatly in recent years and will decrease still further as more and more offices are made available to the intertoll dialing network.

In some cases the trunks are used on a temporary manual (automatic or straightforward) basis when they are used with manual areas not equipped with incoming automatic switching equipment. If the distant manual board is equipped for dialing, these trunks can still be used for incoming calls on a dialing basis.

Most intertoll dialing trunks use E and M lead (CX) signaling although there are a few circuits of the loop signaling type available for use on short haul circuits.

There are a few cases where trunks are used to manual offices which are not arranged for pulsing or where for other reasons the incoming calls must be on an automatic signaling rather than on a dialing basis. In these cases the incoming end of the intertoll trunk is connected to the switchboard incoming trunk through an auxiliary circuit.

B. TOLL SWITCHING TRUNKS

Toll switching trunks are a subgroup of a larger group of trunks known as "Toll Connecting Trunks." Toll connecting trunks are those trunks which are used between the toll switching equipment (manual or automatic) and the local equipment to which toll calls can be connected. The main trunks in this group are the toll switching and recording completing trunks although there are others such as toll subscribers lines, trunks to some desks, etc. These are the trunks which must have at least a 2db loss in offices operating on a VNL basis.

TCI Library: www.telephonecollectors.info

Toll switching trunks are used primarily in completing incoming toll calls to the local subscribers, as well as delayed outward calls and incoming TX calls. Those trunks operating on a dialing basis (or key pulsing) may connect to either toll or local trains in the local office. Where toll trains are used the toll switching trunks are usually arranged for controlled ringing. Where local trains are used, the ringing is always on an automatic basis; that is, the ringing is automatically applied by the local office equipment as soon as the called line is seized.

Where toll switching trunks are used on a manual basis, the ringing is always controlled by the toll operator and is repeated by the toll switching trunk in the local office both on the initial ring and on a rering is required. The toll switching trunk also repeats the subscribers switchboard supervision to the toll operator. Once such a manual toll switching connection is established, the local toll switching operator receives no further supervision on the call until she receives a disconnect signal from the toll operator.

When the toll office is located in the same building with a SXS local office, the toll switching trunks are usually of the 4 wire type connected directly to toll incoming selectors in the local office rather than to the more expensive toll transmission selectors, which are required with 2 wire toll switching trunks. The 4 wire trunks can be arranged for either controlled or automatic ringing but if controlled ringing is used with DC key pulsing trunks they must be in a sender class arranged for 20 cycle ringing simplex. Reverse battery switchhook supervision is over the T & R leads. The S lead is used to hold the switches under control of the operator and with the C lead controls the ringing.

When the toll office is in the same building with a #5 crossbar local office, the toll switching trunk is an integral part of the #5 crossbar trunk which cross connects direct to outgoing trunk jacks in the switchboard and to idle indicating chain relays, group busy circuits or busy indicating relays as may be required. These are MF pulsing circuits from the switchboard. There is one other group of trunks which are handled on very much the same basis.

TCI Library: www.telephonecollectors.info

These are called "Marker Pulse Conversion Trunks" and are used when a switchboard on an MF key pulsing basis must complete some calls on a dial pulse basis to SXS or CDO offices. The marker pulse conversion trunks are furnished as a part of the local #5 crossbar office and cross connect to the switchboard jacks. The equipment in the local office converts the MF pulsing to dial pulsing and routes the call to the desired office.

With the exceptions noted in the preceding two paragraphs all toll switching trunks are provided on a 2 wire basis. Mention has been made of connection to either local or toll trains. Presently automatic ringing local trains are being predominately used with no local trains being provided in addition to existing offices or in new offices. In line with this it can be readily seen that the practice of handling delayed calls must be discouraged.

Toll switching trunks of the dialing, or key pulsing types can also be used with auxiliary trunks to complete incoming intertoll dialing calls. Also 2 wire toll switching trunks of the dialing or key pulsing types can be used as verification (SXS) or No test (X-Bar or Panel) trunks. This is a DSA service which will be covered later.

C. RECORDING AND RECORDING COMPLETING TRUNKS

In the past when most telephone switching was on a manual basis and a subscriber wished to make a toll call, the call had to be passed by the local operator to the toll operator and when the toll operator was located at a separate switchboard, recording trunks were used for this purpose. Since the local cord circuit would not pass supervision between the toll operator and the subscriber it was necessary for the toll operator to obtain the call details from the subscriber, request the subscriber to hang up and then recall the subscriber over a toll switching trunk when she was ready to proceed with the call. For this reason recording trunks were simple one way incoming trunks at the toll switchboard. In present day practice, recording trunks are used mainly for situations where a simple incoming trunk is required such as trunks to the toll switchboard from information desks.

TCI Library: www.telephonecollectors.info

With the development of machine switching central offices it was possible to provide trunks that would enable a subscriber to dial a special code that would connect the subscriber directly to the toll operator. Since these trunks gave the toll operator subscriber's switchhook supervision, it was possible to complete the toll call over these trunks providing the call could be completed immediately. The new trunk was therefore called subscribers recording completing trunks.

There is another recording completing trunk known as an operators recording completing trunk that is used when it is necessary to transfer a call from one toll board to another for special handling, such as to a mobile radio position. The operator at the first toll board must have a recording completing toll cord on her position which she uses to connect between the subscribers recording completing trunk on which the call originated, and the operators recording completing trunk, which in turn connects to another subscriber's recording completing trunk terminated at the desired special service position. The special service operator then has complete control of the call. These arrangements can be furnished on a coin or noncoin basis.

There is also available a recording completing switching trunk for use between a 3CL switchboard and a manual tributary office for both the loop signaling and composite or simplex signaling condition. Outgoing calls to the manual tributary office are handled on a straightforward basis and these calls can originate from the switchboard and also from the switches of a dial tandem or an intertoll dialing system in the same building. Incoming calls from the tributary office can terminate at the 3CL switchboard or in the dial tandem or intertoll dialing system.

A 3 wire recording completing trunk is generally used when the toll office is in the same building with a SXS local office, with a fourth wire added when tone identification is required.

TCI Library: www.telephonecollectors.info

D. OPERATOR OFFICE TRUNKS

An operator office, for the purpose of this discussion, is an office equipped with a toll and DSA switchboard that serves the operators of one or more community dial offices (CDO). Of course, any office with operators is an operator office, but the term, as such, need be considered only in its narrower meaning. A community dial office, is a dial office in an outlying or distant town, having no switchboard of its own and which must, therefore, obtain the required operator services from some other point. Both the size of the CDO and it's distance from the operator office, vary widely. Some CDO's may exceed 5000 lines in capacity and the distance located from the operator office is limited only by the cost of line facilities to the operator office, as compared to the cost of providing operator facilities at the CDO. Occasionally, a CDO may be used as a tandem point to reach other CDO's.

Most CDO traffic is handled over two-way trunks on an automatic ringing noncoin basis. These trunks may be the dialing or the DC key pulsing type and either can be arranged for loop or CX signaling.

If the volume of traffic warrants it, separate incoming and outgoing trunk groups may be used exclusively, or in combination with 2 way trunk groups. Standard toll switching and recording completing trunks are used for the one way trunk groups. Regardless of the type of trunks used, the operator has full supervision over all calls. Facilities are available for connecting operator office trunks to any standard intertoll dialing system so that incoming intertoll dialing calls can be completed direct to the CDO subscribers.

E. TRUNKS FOR DSA SERVICE

There are many types of trunks used for DSA (dial switching assistance) traffic. While some are the same circuits used for toll traffic, others are for DSA traffic exclusively.

When a dial subscriber wants assistance and dials the operator, the dial line is connected to a trunk known as a zero level trunk, so called from early SXS days when

TCI Library: www.telephonecollectors.info

these trunks were connected to the zero level on a SXS switch. Standard recording completing trunks are used for this service (when toll positions are used for DSA service) and operate as previously described.

Completing trunks are used to complete assistance calls when necessary. Generally, standard toll switching trunks are used on combined toll and DSA switchboards where the volume of DSA traffic to be completed is small in relation to the toll traffic. Where the volume of DSA traffic is heavy and for DSA switchboards only there are a considerable number of completing trunks available. The selection of the proper circuit for any individual case depends on the type of local office involved and the type of pulsing required. Since completing trunks connect only to local trains, ringing and coin control features are not required, but otherwise these trunks function substantially as previously covered under toll switching trunks.

F. NO-TEST TRUNKS

No-test (verification) trunks are used to determine whether a particular line is actually busy or whether it tests busy due to trouble conditions. Standard toll switching trunks are generally used for this service, although here again, there are other circuits available for specific applications where their use is more economical. The circuits provided in the DSA (or toll) office connect to equipment in the local office which is designed to connect to the called line without making a busy test (hence no-test).

G. INTERCEPT TRUNKS

Intercept trunks are used, as their name implies, to intercept calls. Regular intercept trunks are used to intercept calls to vacant number, vacant levels, to subscribers denied service or whose number has recently been changed. Trouble intercept is used with a plugging up circuit to intercept calls to or from lines in trouble or where it is necessary to monitor the call for any reason. Until recently there were a great many different intercept trunks available but most of them have now been replaced by three standard circuits which cover regular, trouble or machine intercepting on most any combination of desks and switchboards.

TCI Library: www.telephonecollectors.info

The preferred present day practice is for vacant code (or level) and vacant number intercepting to be handled by the recorded announcement machine which states that a wrong number has been dialed and requests the customer to recheck the number and dial again. After a predetermined number of announcements the call is routed to an operator if the customer is still on the line. Calls to changed or denied service numbers are classed as regular intercept and routed to a desk operator. Trouble calls are always routed to switchboard position so that they can be completed where possible. In smaller offices the recorded announcement machine and even the desk may be omitted and all intercepted calls routed to the switchboard. All three types of calls are usually handled over the same trunk group and the routing is controlled by marks on the tip or ring leads. The large number of intercept trunks required in the local office end are usually concentrated on a small number of trunks to the toll or DSA office by means of concentrating switches usually called trunk finders.

Verification request trunks provide a connection to a toll switchboard operator from terminating circuits in SXS, panel, manual or crossbar offices for receiving verification request calls.

H. SENDER MONITOR TRUNKS

Sender monitor trunks are available for use with panel and #1 crossbar senders when they are located in the same building with the 3CL switchboard. If the subscribers senders in the #1 crossbar have been modified for automatic time release, sender monitor trunks are not required. All #5 crossbar senders are arranged for automatic time release. The purpose of these trunks is to give an indication when a sender stays attached to a subscribers line beyond a specified time. If the local dial unit is in a building separate from the switchboard this service must be handled at the sender make busy frame.

TCI Library: www.telephonecollectors.info

CHAPTER 13

THE TRAFFIC SERVICE POSITION SYSTEMS

13.1 INTRODUCTION

Before the advent of electromechanical switching offices, the switchboard operator not only connected the calling customer with the called party but also provided a number of other functions. Whenever a person wanted to make a long distance call, it was the switchboard operator's function to cause the proper connections to be made through the various subsequent switchboards until the called party answered the call and the talking path was established. In addition, the operator had to remain available so that when the call was terminated, she could properly record the charges. If any problems appeared either in the establishment of the call connections or during the talking phase, the operator was always at hand to supply information, and provide any required "assistance" necessary for the proper solution of these problems. The nature of these problems varied extensively from simple "the line is busy" cases to complex situations such as a "person-to-person" long distance call where the determination of the location of the called party required considerable effort.

When coin telephones were installed, another chore was added to the list of switchboard operator functions. This was the conversation with the calling customer to determine the initial charge, the supervision of the coins deposited and the final charging and coin deposit supervision at the end of the call.

With the advent of electromechanical switching offices, it became possible for a telephone customer to dial directly another subscriber. Later this feature was extended to the direct (automatic) establishment of long distance as well as local calls. However, on each long distance call a "toll" charge had to be manually made, and this required the intervention of a switchboard operator. On a toll "ticket" which the operator filled out and which was subsequently used for the tabulation of a customer's bill, the operator had to record the called number, the calling number, the length of time of the call, etc. Considerable operator activity was thus necessary for each long distance call and with the heavy

TCI Library: www.telephonecollectors.info

growth of telephone subscribers, a considerable number of operators were needed. The constant increase in the number of coin telephones incremented the burden still further.

Although dial telephones became quite universal, the customer still retained the prerogative to simply dial "0" (for Operator) and state the number of the telephone subscriber to which he wished to be connected, instead of dialing the number directly. In a more general sense however, the dialing of "0" enabled his connection to a human operator which provided him with any required assistance rather than being completely dependent on automatic devices. It soon became evident that the growth of telephone traffic would require an over proportional increase of "human" assistance. As a result, a special telephone switchboard specifically to alleviate the heavy influx of assistance calls was designed; this was the 100A Traffic Service Position.

A. THE 100A TRAFFIC SERVICE POSITION SYSTEM

In 1964 the 100A Traffic Service Position (TSP) System was introduced. This system (which was electromechanical in nature) was designed for operation with Crossbar Tandem offices only. The primary equipment was a number of 100A Traffic Service Sections each consisting of two identical operator positions. Each of these cordless consoles (positions) included a horizontal writing space and a slightly sloping control keyshelf which extended into a sharply sloping display panel containing ten display lamps. By obtaining information displayed by various lamps on the console, conversing with the customer, the called party or other switchboard operators, and manipulating the various "buttons" on the keyshelf, the Traffic Service Operator was able to give better and faster service. Also, this system (and the associated electromechanical equipment) provided a direct means to extend customer direct distance dialing (DDD). This included special toll calls such as person-to-person, collect, credit card and charges to a third number.

B. THE TRAFFIC SERVICE POSITION SYSTEM NO. 1

As a result of the successful development of the No. 1 Electronic Switching System, a Traffic Service Position System No. 1 (TSPS No. 1) was designed. In this system each Traffic Service Section is designated "100B," and although somewhat similar to the "100A" Section is very much different in that

TCI Library: www.telephonecollectors.info

an electronic switching system "computer" is now used instead of the electromechanical equipment to aid the Traffic Service Operator. The new system also differs from the 100A system in that it is a common system with a stored program control and operates with one or two toll centers. Instead of being limited to operation with Crossbar Tandem offices, the system works with offices equipped with No. 4 Crossbar, No. 5 Crossbar, Tandem, Panel, Step-by-Step Intertoll and No. 1 ESS equipment.

13.2 GENERAL DESCRIPTION OF THE TSPS SYSTEM NO. 1

Figure 13-1 illustrates the basic Traffic Service Position System (TSPS No. 1) interconnections. As the figure indicates, the system is located (electrically) between a number of local offices, where calls requiring operator action or assistance are originated, and a maximum of two toll switching offices through which the Traffic Service Operator may route the call to the direct distance dialing (DDD) network for connection to the called number.

The system is subdivided into the Trunk circuits, the Base Unit and the 100B Positions. Each Trunk circuit is located in the transmission path (the trunk line) extending from a local office to a toll switching office. The Base Unit consists of Switching Networks (the Trunk Link (TL) and the Position Link (PL) frames) and the Stored Program Control No. 1A (SPC No. 1A) "electronic computer" equipment. The 100B positions may be located locally (in the same location as the Base Unit) or remotely up to a distance of about 50 miles using T-1 Carrier equipment. The normal location of the entire TSPS No. 1 System (except the remote positions) is at a toll switching office.

13.3 THE TRUNK CIRCUITS

There are several types of TSPS No. 1 trunk circuits, all of which can be used for either coin or noncoin traffic. Most are plug-in type trunk units (two circuits per unit) which are mounted on either 2-wire or 4-wire Universal Trunk frames similar to the Universal Trunk frames used in No. 1 ESS.

TSPS No. 1 has no trunk switching or trunk concentrating capability. In other words, it does not connect the calling number to the desired called number. Each trunk circuit is permanently connected on one side to a trunk line

TCI Library: www.telephonecollectors.info

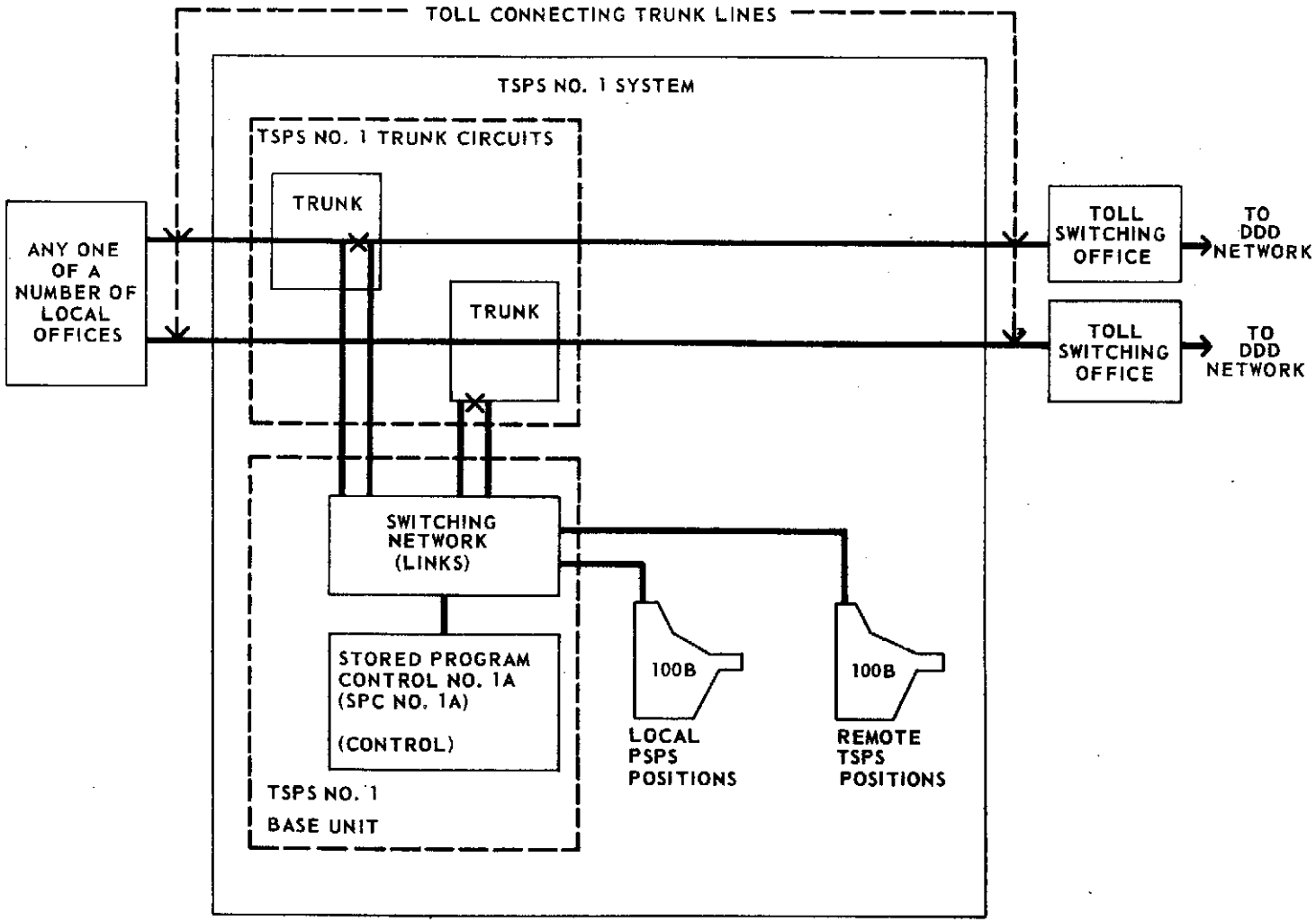

Figure 13-1 The Basic TSPS No. 1 Interconnections

TCI Library: www.telephonecollectors.info

(the two wires) from a specific local office. On the other side it is connected to one of the associated toll switching offices. In addition, each trunk circuit is connected to terminals on a Trunk Link Network in the TSPS No. 1 Switching Network.

The trunk circuits are designed to have "transparent" transmission characteristics so that when a call has been completely processed, the trunk circuit is "cut through" and the Switching Network, Base Unit and Positions are effectively cut off. When the trunk circuit becomes connected to a 100B TSPS position, special transmission features are provided to ensure trunk stability and proper transmission between the calling customer, the TSPS operator and the called party.

Since all outpulsing (the transmission of telephone numbers to the toll switching office) originating at the TSPS position consists of multifrequency (MF) pulses, each toll switching office in which the trunk lines are terminated (on associated trunk circuits in that office) must be able to accept these multifrequency pulses.

Across each pair of wires representing the trunk line from a local office, a Ferrod is connected. The Ferrod is a current sensing device operating on electromagnetic principles. It consists of a ferrite rod around which is wound a pair of solenoidal control windings. In addition, a single-turn "interrogate" winding and a single-turn "readout" winding are threaded through two holes in the center of the ferrite rod, as further explained in the No. 1 ESS chapter. By periodically scanning the status of these Ferrods (which are assembled into a matrix of 512 scanning "points" for each Universal Trunk frame) the existance of new calls requiring TSPS operator action is detected.

The detection is actually performed by the SPC No. 1A control equipment which scans (interrogates) many times every second each of these Ferrods as guided by the appropriate Program in the SPC No. 1A memory. When a new call is detected, the control equipment routes the call (again as guided by a Program in memory) through the Switching Network to a TSPS operator at a 100B TSPS position.

TCI Library: www.telephonecollectors.info

13.4 THE "BASE UNIT"

The functions of the Base Unit are to detect a request for Traffic Service Positions operator action, to route the call to an operator, and to enable the operator to properly supply the required and requested services by effecting various interconnections on the basis of the "Programs" and data stored in the SPC No. 1 memory (the Store).

Figure 13-2 is a Block Diagram in which the components of the Base Unit are shown. The major sections of the Base Unit are the Switching Network (shown as TSBO, TL and PL), the SPC No. 1A equipment (outlined with dotted frames), and the associated peripheral equipment such as the Miscellaneous Trunk frame, Service Observing frame, Position Grouping Gate frame, etc. The Universal Trunk frames, although always located with the Base Unit, are not considered as part of the Base Unit.

13.5 THE SWITCHING NETWORK

The basic TSPS No. 1 Switching Network consists of a Trunk Line Network (TLN) on which up to 256 trunk circuits may be terminated and a Position Link Network (PLN) to which up to 80 100B TSPS positions and 96 Service circuits may be connected. When additional trunk capacity is required, a maximum of three Trunk Switching Buildout (TSBO) frames may be installed, each providing for an additional 256 trunk circuits. If required, additional Trunk Link Networks and Position Link Networks may be added to further increase the capacity. Thus, the TSPS No. 1 Switching Network design allows for orderly growth of TSPS office sizes. The design also allows for a number of flexible arrangements for a variety of traffic conditions.

The basic switching device in the Switching Network (in the TP, PL and TSBO frames) is the Ferreed. The Ferreed consists of two miniature glass-enclosed reed switches which are opened or closed by the magnetic action of the surrounding material. These are arranged into square arrays of 64 Ferreeds each (8 columns and 8 rows) for 8 input pairs of wires and 8 output pairs of wires. The arrays, called "crosspoint Ferreed switch assemblies," (which are the same as the ones used in the No. 1 ESS equipment) are described in the No. 1 ESS

TCI Library: www.telephonecollectors.info

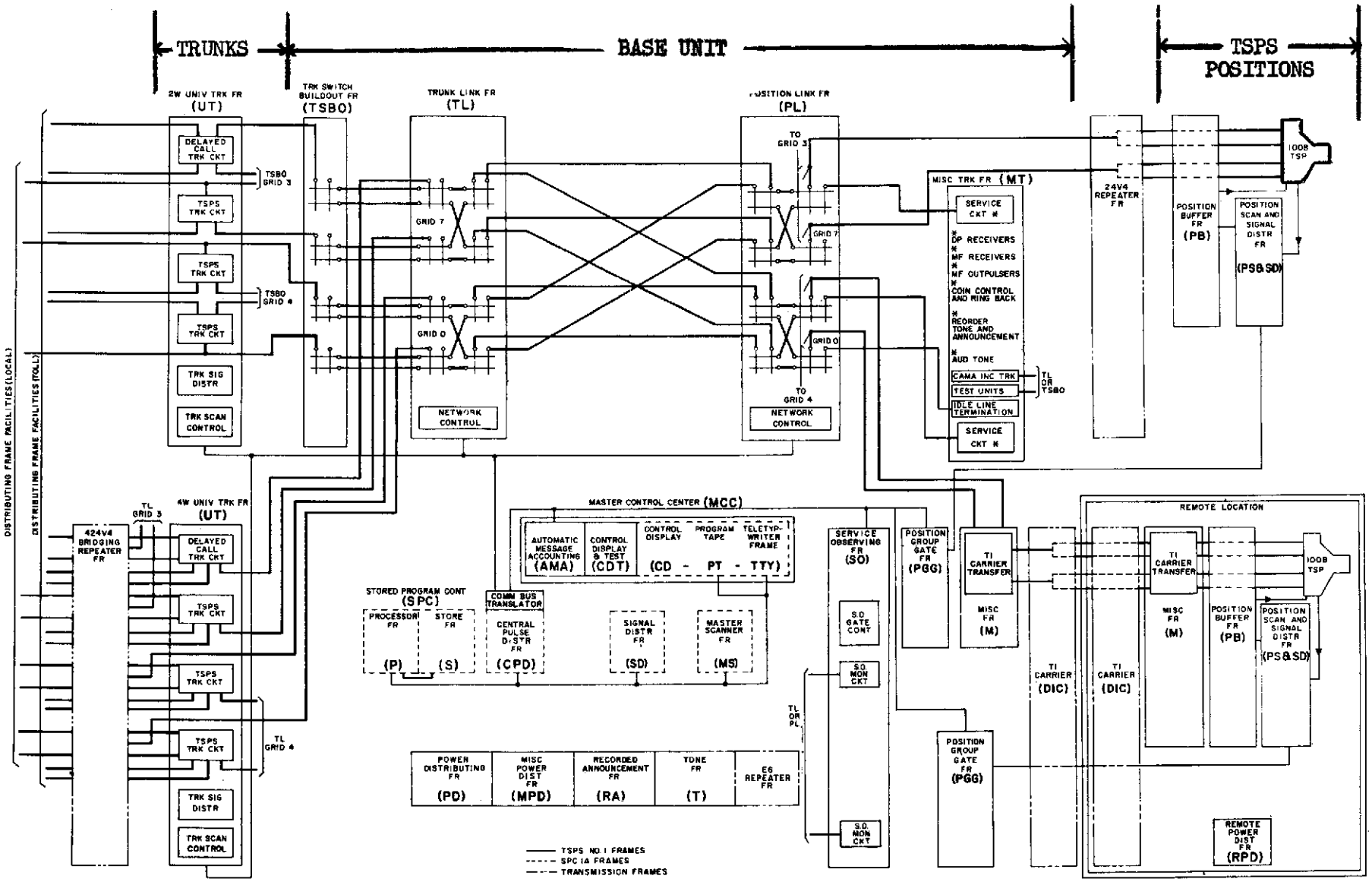

Figure 13-2 TSPS No. 1 Equipment Block Diagram

TCI Library: www.telephonecollectors.info

chapter. It is by means of these switches that a trunk line becomes connected to a TSPS position or to any of the Service circuits in the Miscellaneous Trunk frame. The switches are selected and controlled by the SPC No. 1A equipment.

13.6 THE SPC NO. 1A EQUIPMENT

The TSPS No. 1 system employs a store program method of control similar to the one used in the No. 1 Electronic Switching System (No. 1 ESS). This method of control, called the Stored Program Control No. 1A (SPC NO. 1A) System, was designed not only for the TSPS No. 1 system, but also as a device for improving the operation of certain other switching systems such as No. 5 Crossbar, 4A and 4M Crossbar, etc.

The SPC No. 1A equipment is basically an electronic digital computer containing a memory which in turn contains procedural, system maintenance and suitable application programs. The memory also serves as a "scratch pad" for the recording of any data either permanently or temporarily. Additions and changes in the basic service can be introduced primarily through program modifications rather than by rewiring or by making hardware changes. Thus, the installation is able to have a large degree of flexibility.

The basic unit of the memory (referred to as the "store") is the Piggyback Twistor (PBT) which provides for the storage of information. This information can be "read" by the associated control equipment repeatedly, and can also be changed (by "writing" into the "store") by the same control equipment. The Programs (contained as information in the memory) consists of a logical sequence of instructions which when decoded one at a time by the control equipment (the Processor) will cause certain equipment action only if the conditions at that moment require the particular action to take place.

The Processor is the center of all control activities. As it executes each program instruction it monitors and controls peripheral equipment by operating on data temporarily stored in memory. It then transmits the resulting output to the peripheral equipment as orders or commands, which in turn causes the proper action to take place in the Switching Networks, the TSPS positions or anywhere else in (as directed) the system. The Processor therefore, in accordance with the instructions and data stored in the Piggyback Twistor memory, either directly or indirectly controls the operation of every circuit in the system.

TCI Library: www.telephonecollectors.info

Two identical Processor frames are used for continuous parallel operation from duplicated Stores (memory). Both Processors perform the same routines simultaneously but only one (either one) is always actively in control. High-speed matching of the information in each of the two Processors provides the major means for the automatic detection of any equipment troubles.

In addition to the Piggyback Twistor Store and the Processor, the SPC No. 1A equipment includes the Master Scanner frames which provide input data to the Processor, and the Signal Distributor frames through which the processor activates associated peripheral equipment and other frames shown on Figure 13-2. Most of these frames are the same as the ones used in the No. 1 ESS equipment. A Control and Display frame and at least one teletypewriter unit are also included for control of the SPC No. 1A equipment by the maintenance personnel. The Program Tape Unit (which is not included in the No. 1 ESS equipment) has the function of enabling the transfer of information (the programs, etc.) from magnetic tape into Piggyback Twistor Stores whenever this is required.

The Programs are originally written by Programmers and then compiled and assembled into the required "machine" language programs with the use of commercial computers, such as for example the IBM 7094 computer. The Compiler-Assembly process on this computer causes the resulting programs to be stored on an output magnetic tape. It is this tape that is mounted on the Program Tape Unit to transfer the Programs into the TSPS No. 1 memory.

13.7 THE 100B TSPS POSITION

The 100B Traffic Service Position Section, illustrated in Figure 13-3, is a two-position cordless console made primarily of sheet steel. It has a horizontal writing space which extends the full width of the position, a lightly sloping control keyshelf and a sharply sloping display panel, and is similar to the 100A TSPS position.

In the center of the display panel is an enclosure containing 12 display lamps. These lamps are used to indicate the originating (calling) telephone number, the termination (called party) telephone number, the charging rate for the call, the elapsed number of minutes, the time of the day, a special billing number, a hotel serial number or any other data which is obtainable from the Base Unit.

TCI Library: www.telephonecollectors.info

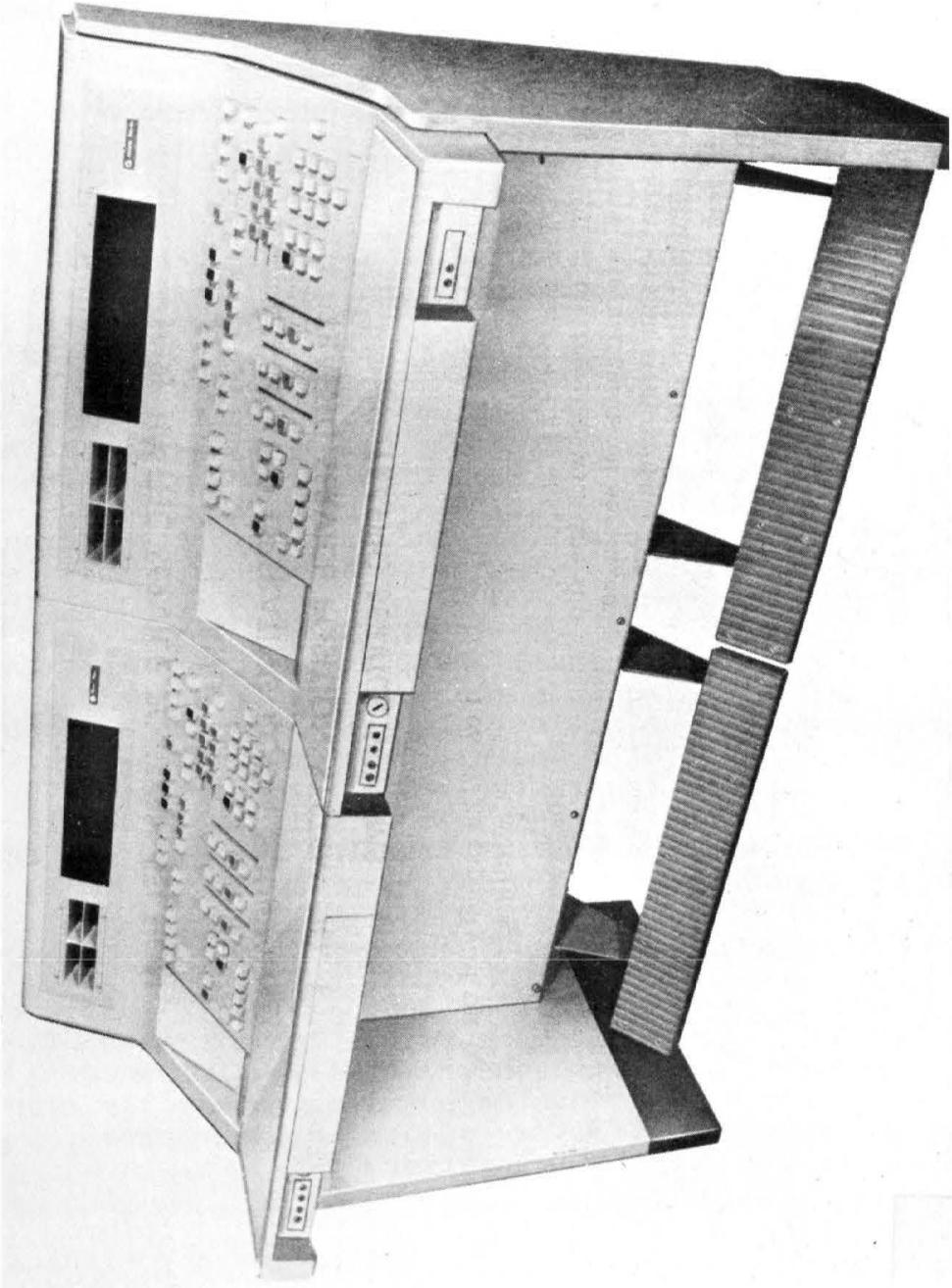

Figure 13-3 100B Traffic Service Position Station

TCI Library: www.telephonecollectors.info

To the left of the display lamps is a four-compartment ticket box which is used to hold "mark-sense" (data cards for processing by automatic optical scanning equipment) toll tickets. This holds new and completed tickets. Three single-compartment boxes on the keyshelf hold tickets for calls that are in progress. Thus each of these ticket boxes is associated with one of the three "loops" available to the operator. A "loop" may be considered as essentially composed of the circuits and associated equipments required for the holding and processing of calls through the TSPS. By placing one of these "loops" into a "hold" status and placing the toll ticket for this call in the associated ticket box, the operator can then process another call with one of the other "loop" circuits while waiting for the results on the first call.

Each keyshelf is usually equipped with a multileaf bulletin holder which the operator may use to readily obtain traffic information.

The various keyshelf keys (buttons) and lamps which the TSPS operator uses to perform her functions are shown on Figure 13-4.

If the positions (and associated buffer circuitry) are located up to a distance of 4 miles from the Base Unit, voice and data paths are used. However, when the remote positions are located from 4 miles and up to a distance of 50 miles away from the Base Unit, T1 Carrier facilities (which are duplicated for reliability) must be used.

A group of positions (up to a maximum of 62) at a single location, and supervised by a chief operator is called a "chief operator unit." An administrative unit at the Base Unit location is responsible for the administration of all chief operator units (local and remote) in a TSPS No. 1 system.

All calls are distributed automatically to idle positions in any chief operator unit, on a rotational basis and in accordance with a certain priority. This priority depends on the number of idle "loops" available in a position. Positions with no "loops" in a "hold" status are considered (at the time the automatic assignment of the next call is made) as having the highest priority while those positions with two "loops" in the "hold" state are considered as having the least priority.

TCI Library: www.telephonecollectors.info

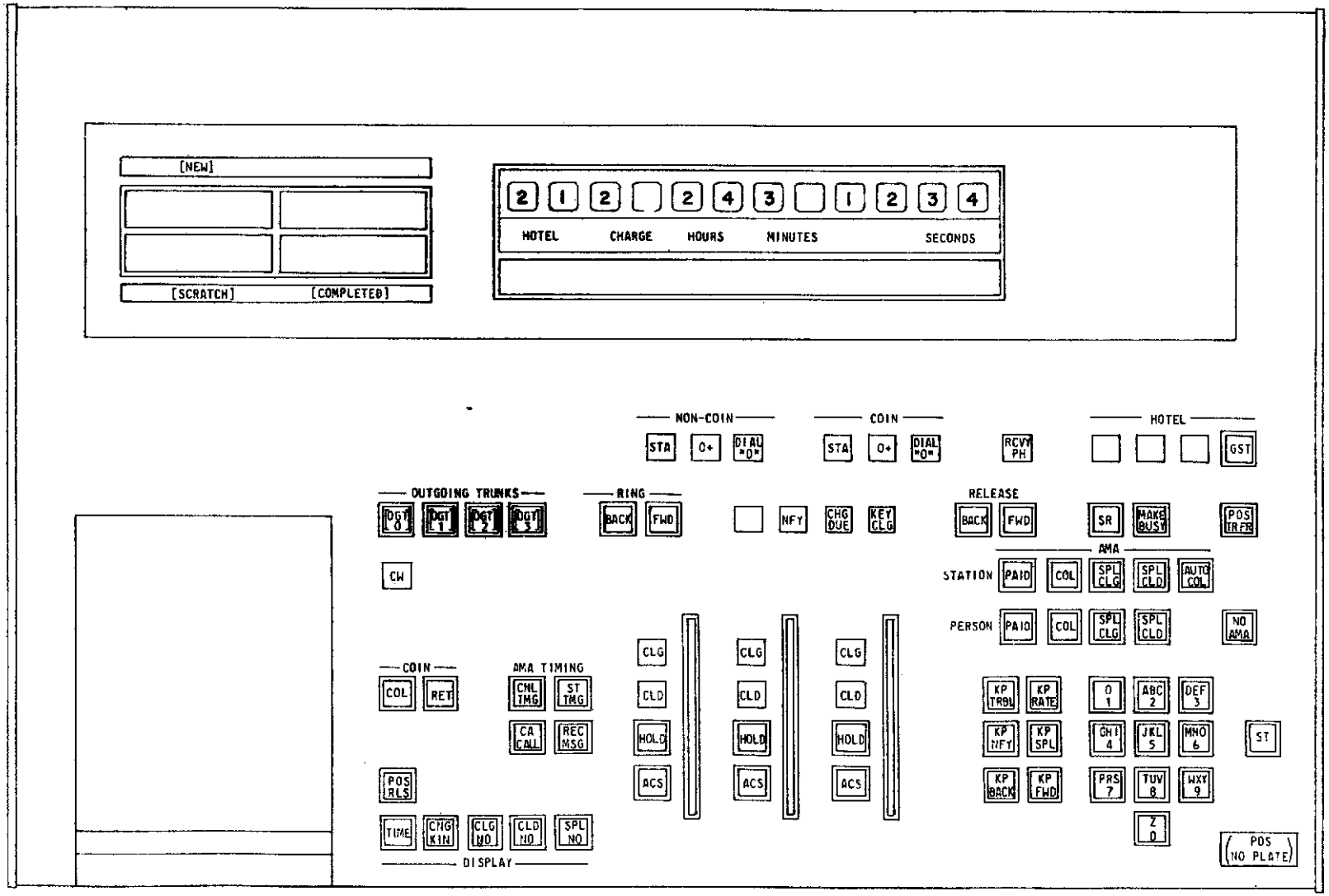

Figure 13-4 Traffic Service Position System No. 1 Keyshelf

TCI Library: www.telephonecollectors.info

Whenever the operator encounters a type of call which she cannot completely process, she can forward the call to a cord switchboard elsewhere by key pulsing a locally designated code. This causes the toll switching office to route the call to a cord switchboard operator which will process the call. The TSPS operator, after passing the appropriate information to the cord switchboard operator may release her position from the call by pressing the POS RLS (Position Release) key on the keyshelf.

13.8 THE CALL PROCESSING SEQUENCE

The TSPS No. 1 call processing sequence begins at the local exchange. If "O" (for Operator) is dialed (with or without the called party's telephone number dialed immediately thereafter,) or if the call (long distance) originates at a coin station, or if it is a person-to-person call, or a "collect" call, etc., it is routed via a trunk line which contains a TSPS No. 1 trunk circuit, to the toll switching office. The call is then detected by the Traffic Service Position System. The detection is accomplished by the frequent scanning of all the Ferrods in the Trunk Scanner. The SPC No. 1 control equipment, as guided by the Programs in memory, recognizes the new call by comparing the state of the Ferrod (associated with the particular TSPS trunk circuit) with its previous state as recorded in memory. This recognition causes the execution of various programs by the SPC No. 1 Processor while simultaneously executing other programs for other calls associated with other positions. If, for example, during the execution of these programs a particular call is deduced by the proper program as being a "O+" type call ("O" for Operator plus seven or ten digits dialed or pulsed immediately thereafter), and that the number will be received as dial (and not multifrequency) pulses, the control equipment quickly establishes a path through the Switching Network from the particular trunk circuit to a dial digits receiver. The function of this receiver is to recognize each dialed digit and enable the control equipment to store the entire number in memory. This, of course, must all happen rapidly so that none of the dialed digits are lost.

In a similar manner, (for a "O+" call) a path between the trunk circuit and a multifrequency pulse transmitter is established through the Switching Network. The dialed number is then automatically pulsed out to the toll switching office through this connection.

TCI Library: www.telephonecollectors.info

The SPC No. 1A control equipment also establishes a path through the Switching Network and automatically connects the trunk line to a TSPS 100B position which it has found idle and ready to serve the next call. The connection of the position to the new call is recognized by the Traffic Service operator by means of a tone which she hears on her telephone headset and by the lighting of various lamps on her keyshelf. By observing the pattern of lighted lamps, certain information (the type of call, etc.) is immediately indicated to her. The lighting of the lamps is caused by the SPC No. 1A equipment which analyzed the call according to the program instructions in its memory.

By conversing with the calling customer the operator is now able to render assistance as well as obtain additional information about the call. Subsequently, by pressing the proper buttons on the keyshelf, she performs the required functions which naturally vary with the type of call. Usually, this includes the entering of certain information for the recording and eventual charging of this call by the Automatic Message Accounting (AMA) equipment. If this is not applicable, she may be required to fill out a toll ticket for the same purpose. Whenever the operator is handling a call from a coin station, she may request from the SPC No. 1A equipment, automatic charging rate information. By reading the rate as revealed on the display lamps and by stating the charge to the calling customer, she then supervises the depositing of the correct amount of coins.

After all the necessary functions have been completed, the operator releases the position from the call, and is free to be automatically assigned to another call.

Each active trunk circuit has a certain area in memory devoted to the storage of all information pertinent to the particular call in progress. When the SPC No. 1A equipment, in its scanning process, detects the termination of a call, proper disconnection takes place, the original TSPS operator is reassociated with the call (if required), and the call details are transferred to a magnetic tape. The contents of this tape is later used as an input for a commercial computer process used to obtain billing and statistical information.

TCI Library: www.telephonecollectors.info

13.9 TYPICAL SERVICES PROVIDED

The TSPS No. 1 system provides facilities for a number of different services. Some of these are briefly mentioned below.

The TSPS operator may, whenever required, serve a Centralized Automatic Message Accounting (CAMA) operator by obtaining the necessary information from the calling party and then keying the required data into the system. This routes the information to the CAMA office over a CAMA-TSPS No. 1 trunk line where the information is recorded. However, in this case, the information is not recorded on the TSPS Automatic Message Accounting (AMA) magnetic tape.

Person-to-person calls may originate at either coin or noncoin telephones. To obtain operator assistance the customer dials "O" (for Operator) plus the called number which may include an area code. By obtaining the called person's name and then by conversing with whoever answers the called number (and possible keying out a new telephone number for connection to a telephone at an alternate location,) the operator eventually (if successful) reaches the called person on the telephone line. When the conversation between the parties begins, the operator activates the automatic charge calculation process by pressing the ST TMG (start timing) button. She then depresses the POS RLS (position release) button which causes the call to "float" with no further attention from the TSPS operator required. A call is said to "float" when the TSPS position is disconnected from the trunk circuit after the necessary operations to establish the connection have been performed. The call is then monitored by the SPC No. 1A equipment and at the conclusion of the call, if the call had originated at a noncoin station, proper charge entries are made on the AMA magnetic tape. If the call had originated at a coin station, it may at this time be returned to a TSPS position for further operator assistance.

For Station-to-Station calls, operator assistance is usually not required except if the call originates at a coin telephone. In such a case assistance is always required for the collection of the coins. When a toll call originates

TCI Library: www.telephonecollectors.info

at a noncoin telephone, operator assistance is required only if Automatic Number Identification (ANI) equipment is not available in the local office. When this occurs, the calling number must be obtained by the operator so that it may be recorded by the AMA equipment.

The customer may dial "O" (for Operator) without dialing any called number. This is commonly referred to an "O-" type call. When this occurs, the operator must obtain the called number as well as the calling number (and any other required information) from the calling customer, so that the call can properly be established and the required information be recorded on the AMA magnetic tape.

To provide "Sequence Calls" service, the TSPS operator keys into the SPC No. 1A equipment the numbers of the called parties in order in which the calls are to be made. The necessary connections will then be established in sequence (one after another) by the Base Unit. Such calls may also be established on a delayed basis. For these calls, the time that the calls are to be made is keyed in by the operator. The SPC No. 1A equipment will then establish the connections at the proper time.

"Collect" calls may originate at either coin or non-coin telephones. Whenever the TSPS operator handles this type of a call, she must ask the called party if the charge will be accepted. For business purposes, an "Auto Collect Call" arrangement can be established (also known as "enterprise" calls) by which all calls to the called number are charged as "collect" calls. This arrangement enables a sponsor of a radio or television commercial to request the listeners to call a certain telephone number at the sponsor's expense.

A "Hotel" call differs from other types of calls in that it arrives into the TSPS No. 1 position as a noncoin call and the hotel or motel switchboard attendant announces it as a "guest" call. If it is to be charged to a Credit Card number, to a third number or to a Special Billing number (sometimes called a "Q/Z" call,) the operator depresses a GST (guest) button which causes a special entry to be stored in memory until required by the AMA recording of the call data.

TCI Library: www.telephonecollectors.info

On Credit Card calls, the operator must obtain from the customer (whether it is a hotel, coin or noncoin call) the 10-digit Credit Card number, and then by using the outpulsing buttons on the keyshelf, key it into the SPC No. 1A memory.

Similarly, on "Charge to a Third Number" calls, the operator must key in the number of the person charged. However, in this case, she must also verify if the third number customer will accept the charges.

Many other types of services and calls are possible with the TSPS No. 1 position. The inherent flexibility of the system (because of the SPC No. 1A equipment, including its memory) allows for many other possible services to become available in the future. In most cases only the changing of the existing programs or the addition of new programs in the memory of the system will be required in order for the TSPS No. 1 positions to handle the additional services.

TCI Library: www.telephonecollectors.info

CHAPTER 14

AUTOMATIC MESSAGE ACCOUNTING

14.1 INTRODUCTION

The Bell System serves upwards of 87 million telephones and completes over five billion long distance conversations a year. In dealing with quantities such as these, it does not take much imagination to appreciate that the accounting and billing problems are great. To carry on such a business the collection of earned revenue becomes most essential, and before this revenue can be collected bills must be prepared and presented to the customer. It is in the preparation of the data that is to be presented on the bills that Automatic Message Accounting (AMA) concerns itself.

Telephone Companies have unique problems in preparing bills. They sell tailor-made service items to millions of customers. Each service item consists of putting temporarily at the customer's disposal, an impressive physical plant, and a skilled human organization to enable him to communicate at will with his family, friends or business associates, whether they be just around the corner or thousands of miles away. A very large proportion of these service items are of truly low price. Although the Bell System is a multibillion dollar concern, much of its revenue is derived from service items, a great many of which cost only 30, 25, 20 cents or even less. There are, of course, toll calls that cost several dollars, but even these fall in a group which can be classified as low price service items. What runs up the system's total annual revenue into hundreds of millions of dollars is the enormous volume of these low priced service items. Therein lie the problems of recording, accounting for, and billing the customer.

14.2 AUTOMATIC MESSAGE ACCOUNTING (AMA)

A. BACKGROUND

Within the past few years, most of the lines within the Bell System have been integrated into the AMA system. This system records all the data required to charge for subscriber-dialed toll and many subscriber-dialed local message rate telephone calls and to mechanically process the records in accounting centers. Both the recording and processing arrangements employ many novel circuit and apparatus components. The use of the system permits

TCI Library: www.telephonecollectors.info

the wide expansion of direct subscriber dialing to nearby and more remote points, with resultant increased speed, and convenience to telephone customers. Although AMA is the first system to carry out automatically both recording and accounting for toll calls, it is not the first step in this direction, but is rather the culmination of a long line of developments.

During the early years of the telephone, subscribers were charged exclusively on a flat monthly or yearly basis; but since the end of the last century, message rate service has been available in many of the cities. Initially, the record of such calls was in the form of tickets prepared by operators. This method was later supplemented by the use of a small electromagnetic counter, called a message register, associated with each message rate line and operated once for each call made. As the metropolitan areas grew larger and subscribers began to call regularly beyond their local areas, zone registration was adopted. It provides circuits that, on each call beyond the local area, operate the message register the proper number of times to represent the cost of the call. Thus, if the charge on a call is 20 cents and each message register operation represents a charge of five cents, the register would be operated four times for this particular call.

Although zone registration is an economical method of charging for short calls, it does not leave any record of the details of the various calls. For calls requiring more than five message register operations, it has generally been felt desirable to have a record not only of the point to which the call was placed but of the day and time it was made. To secure such a record, and at the same time to obtain the economies and increased speed possible from automatic operation, automatic ticketing arrangements were developed. With this system a ticket is automatically printed for each chargeable call, and thus all essential information pertaining to the call is permanently available.

The printing of a toll ticket is only part of the work of charging for calls. Before subscribers can be billed for their calls, the tickets must be brought together and sorted out for each subscriber, computed, and totaled; from this data the bill is prepared. This work is extremely laborious and represents an appreciable item of expense.

TCI Library: www.telephonecollectors.info

It was recognized that the entire process of recording calls and preparing the customer's bills could be done mechanically but considerable development was required to make possible an economical automatic message accounting system.

B. GENERAL OPERATION

In the AMA system, the information pertaining to all calls requiring a charge is perforated, in code, on an oil-impregnated paper tape three inches wide. A specimen of the section of the tape after perforation is shown in Figure 14-3. There is space for twenty-eight holes across the tape, which is used for recording six digits in coded form, each representing a single item of information. Adjacent rows are about one-tenth inch apart, and either four, six, or seven rows of information are required per call. The items of perforated information are automatically read and interpreted at the accounting center at a rate of 150 digits (25 reader cycles) per second.

The perforating machines, see Figure 14-1, are installed in cabinets. They are associated with the outgoing trunks in the No. 5 Crossbar and No. 1 Step-by-Step systems, with the district junctors in the No. 1 Crossbar system, or with the incoming trunks of tandem and toll switching systems. One recorder serves 100 trunks or district junctors. Together with their associated equipment, they are installed in the individual telephone central offices. Each day at about 3 a.m. the tapes in all the recorders are automatically prepared for cutting by perforating a readily recognized pattern to indicate the section where the tape is to be manually cut. After cutting they are transported to the accounting center for processing. This accounting center may handle the tapes from many central offices and may be remote from any of them.

Since each tape from a recorder includes the information for all calls handled by a group of 100 trucks or district junctors, calls from a particular subscriber may be distributed over a number of tapes, and the information for any one particular call will usually not be on adjacent lines of the tape. Some of the information is recorded as the call is dialed or shortly thereafter, but the time the called subscriber answers, which is the beginning of the charge period, is somewhat later; in the meantime information relating to other calls may have been recorded on the same tape. The time the conversation is

TCI Library: www.telephonecollectors.info

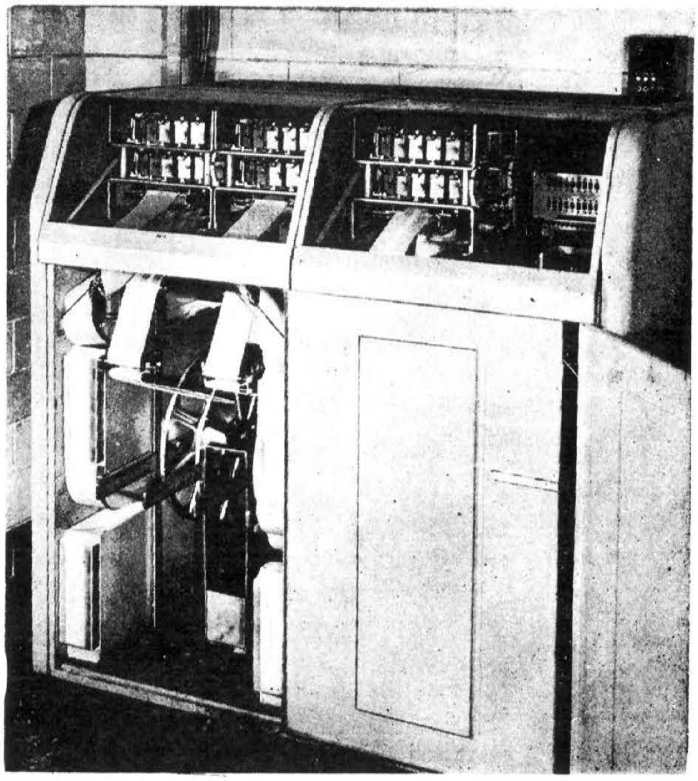

Figure 14-1 Two Tape Perforators

completed will, in general, be considerably later, and thus there will be information pertaining to any calls between the beginning and the ending of any particular call. Each tape, moreover, will include information on calls that are charged for in entirely different ways. For calls that are billed in bulk (message unit basis) it is not necessary to record the office and number of the called subscriber, since the duration of the call and other billing information provided in the call record is sufficient to determine the charge. This type of call requires only four lines on the tape, while six or seven lines are required when information pertaining to the called subscriber must be recorded.

At the accounting centers, all information pertaining to each call is gathered, conversation time is computed and the type of call, (toll, message unit, bulk billed, special) is noted. A printed or punched card with this information is then produced for each subscriber.

TCI Library: www.telephonecollectors.info

C. AMA TAPE FEATURES

In the central offices, recorders perforate, on paper tape, the records of calls routed over trunks arranged for AMA operation. Central office circuits are arranged to provide these recorders with the information required for determining the proper charges for each message. In order to control the processing of this information at the accounting center, the recorders are assigned in recorder groups. A section of tape produced by a central office recorder and its interpretation is shown in Figure 14-3.

It should be noted in Figure 14-3 that a "line" of information actually consists of the alternate holes of each of two adjacent rows. This arrangement permits a greater compactness of perforator equipment than would otherwise be possible. Figure 14-2 shows the staggered arrangement of the plungers for perforating the paper tape. However, the type of diagram representing the information as being on a straight line shown in Figures 14-5, 14-6 and 14-7, is used to simplify the discussion.

The "2 out of 5" code used to represent the call information on the tape is explained in Figure 14-4, the lower box illustrating a typical line of information.

The information for each message is recorded in three main parts on the paper tape in the following manner.

1. Initial Entry

After a subscriber completes dialing a call an initial entry is recorded on the paper tape. (See Figures 14-5, 14-6 and 14-7.) This entry consists of a series of consecutive lines containing information about the calling subscriber, and if needed, similar information about the called subscriber. The last line of an initial entry contains, in addition to other information, a 2-digit code known as the call identity index which identifies the trunk used for this call, and may be any number from 00 to 99. This index, which will be the same for each of the three recorded elements of a message, is used later in the accounting center to associate these elements to compute chargeable time.

TCI Library: www.telephonecollectors.info

2. Answer Entry

When the called subscriber answers, a second entry, called the answer entry, is made by the same recorder on the same tape. (See Figures 14-5 and 14-6.) This entry consists of a single line and contains the tens, units, and tenths of minutes of the hour in which the call was answered, and the call identity index. An Hour entry is recorded on the tape at the beginning of each hour and applies to all subsequent calls until a new hour entry is recorded. Day entries, in like manner, are recorded once a day. The day entry is made at 3 a.m. with the splice entry.

3. Disconnect Entry

When the call is terminated, a third entry, called the disconnect entry, is perforated on the tape. (See Figures 14-5 and 14-6.) This entry is also a single-line entry and contains the tens, units, and tenths of minutes of the hour in which the message was terminated, and the call identity index.

A central office equipment arrangement is available whereby on single message unit (SMU) non-overtime calls, only the initial and answer entries are recorded.

4. Other Entries

In order to insure, as far as possible, smooth and correct accounting center processing of the charge information recorded on the tape, there are numerous other entries perforated on the tape, when required. Information that is common to all messages from a particular central office is perforated only at the beginning and end of the central office tape. Typical of these are the entries denoting the month, day, and recorder number. An hour entry is perforated every hour on the hour, and later aids in correctly timing and associating the correct hour with each message. Cancel entries are perforated, when necessary, which later instruct the accounting center machines how to proceed when certain irregularities are encountered.

TCI Library: www.telephonecollectors.info

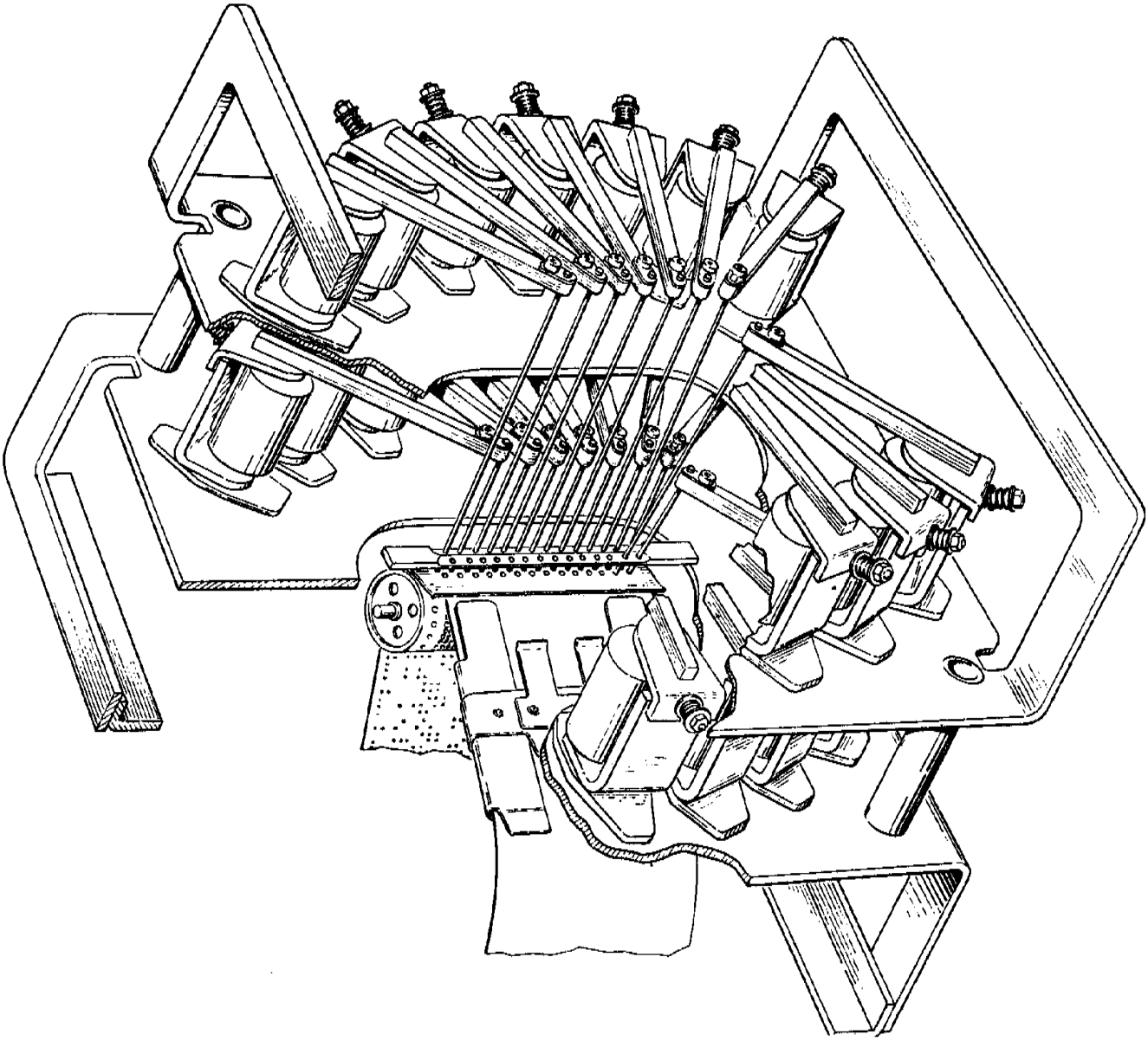

Figure 14-2 Broken Away Perspective View of the Perforator

TCI Library: www.telephonecollectors.info

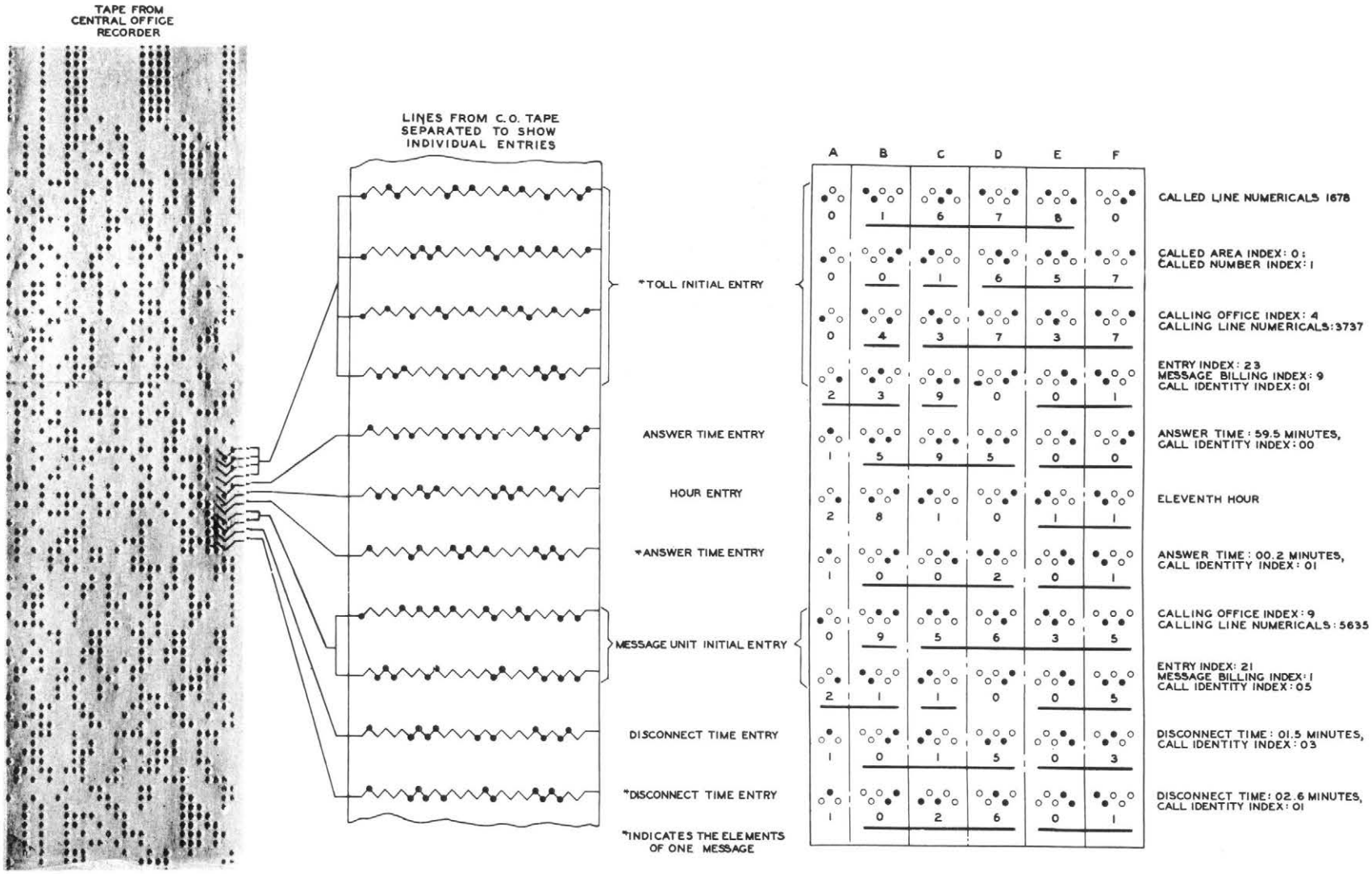

Figure 14-3 AMA Central Office Recorder Tape

TCI Library: www.telephonecollectors.info

A DIGIT CODE

NUMBER RECORDED ON TAPE	HOLE POSITION PERFORATED	APPEARANCE OF A DIGIT		
		0	1	2
0	0	●	○	○
1	1	○	●	○
2	2	○	○	●
3	0, 1 AND 2	●	●	●

B TO F DIGIT CODE

NUMBER RECORDED ON TAPE	HOLE POSITIONS PERFORATED	APPEARANCE OF B,C,D,E AND F DIGITS				
		0	1	2	4	7
0	4,7	○	○	○	●	●
1	0,1	●	●	○	○	○
2	0,2	●	○	●	○	○
3	1,2	○	●	●	○	○
4	0,4	●	○	○	●	○
5	1,4	○	●	○	●	○
6	2,4	○	○	●	●	○
7	0,7	●	○	○	○	●
8	1,7	○	●	○	○	●
9	2,7	○	○	●	○	●

TYPICAL ENTRY LINE REPRESENTING 239041

DIGIT DESIGNATION	A	B	C	D	E	F
LOCATION OF PERFORATION	0 1 2 ○○●	0 1 2 4 7 ○●●○○	0 1 2 4 7 ○○●○●	0 1 2 4 7 ○○○●●	0 1 2 4 7 ●○○●○	0 1 2 4 7 ●●○○○
NUMBER REPRESENTED	2	3	9	0	4	1

Figure 14-4 Codes Used to Represent Numerals in AMA Recording

TCI Library: www.telephonecollectors.info

D. CALL IDENTITY INDEX

A group of recorders may have a maximum of 10 or 20 recorders depending on the type of switching equipment employed at the recording office. Each recorder can serve up to 100 separate trunks, with each trunk having a different call identity index assigned to it. After a message is terminated, the trunk over which the message was routed, together with its call identity index is then available to serve another call. While the entries for a particular message will be in time order on the tape, the recording technique may result in the entries for a number of calls being interleaved. It is through the use of the call identity index that the accounting center equipment is able to separate and properly associate the respective elements of each message.

At the end of each day, or several days if a weekend is involved, the tapes from all recorders in a recorder group are cut and forwarded to the accounting center, see Figure 14-16. Collectively, these tapes provide all the information required for the billing of AMA recorded customer dialed, chargeable messages (completed calls).

E. TYPES OF AMA MESSAGES

AMA recorded messages presented to the accounting center fall into two main categories; one type of message is charged on the basis of message units and ultimately bulk-billed to the customer, and the other type is itemized individually on the subscriber's toll statement and referred to as detail-billed messages. These two types of messages are considered separately in the following paragraphs.

1. Bulk Billed Messages

Message unit messages which are bulk-billed to the customer are charged for in terms of message units. These are usually calls made to a point within the local service area of the calling station. Consequently, the accounting center equipment must convert chargeable time to the equivalent number of message units. These machines accomplish this through the use of (1) the message billing index recorded with each message and (2) the chargeable time in minutes for the message, as derived by the computer or

TCI Library: www.telephonecollectors.info

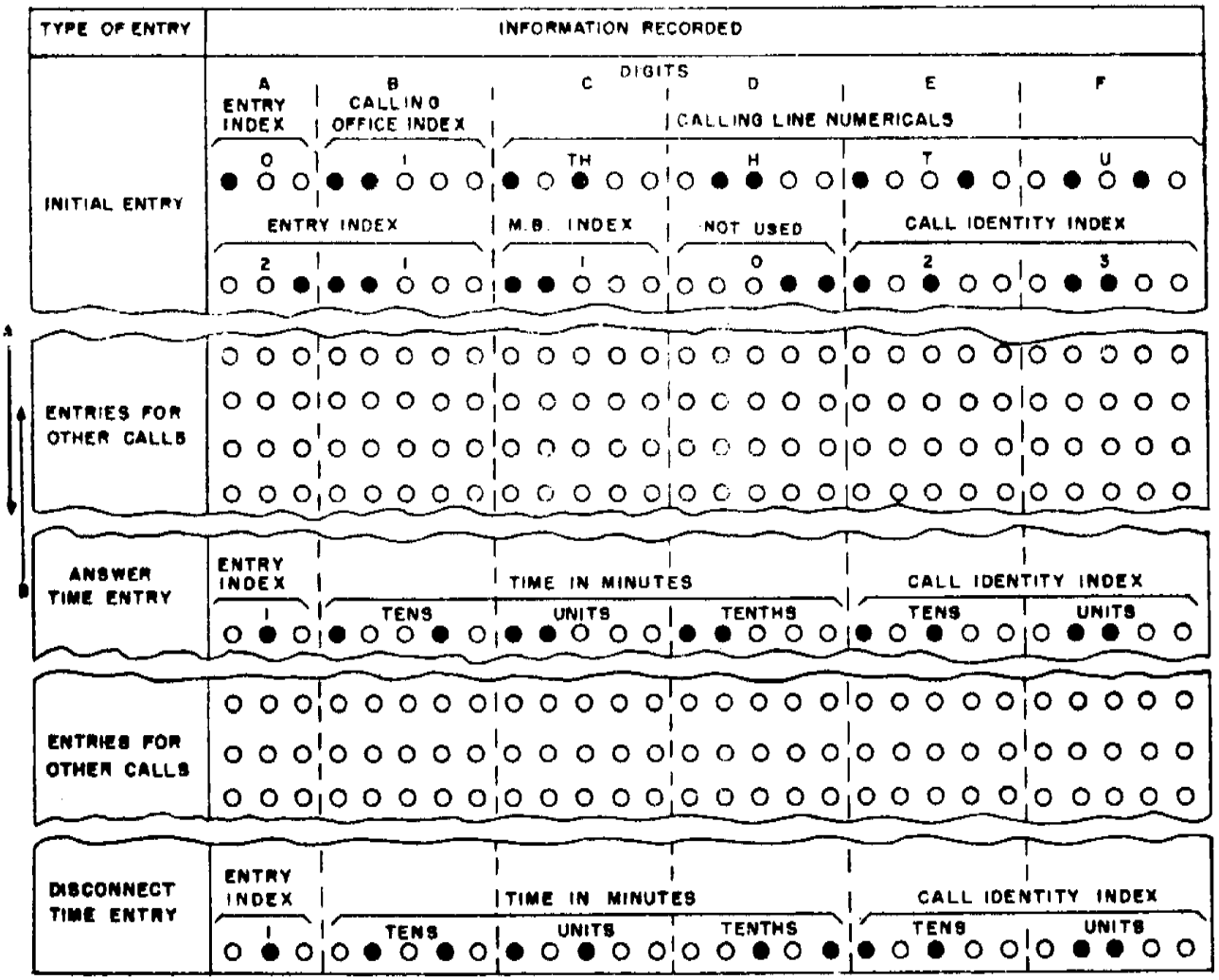

NOTES:

1. ENTRY INDEX 21 SHOWS THAT THIS IS AN INITIAL ENTRY OF 2 LINES.
2. MESSAGE BILLING INDEX 1 SHOWS THAT THIS IS A MESSAGE UNIT CALL.
3. CALL IDENTITY INDEX OF THIS CALL IS 23.
4. CALLING LINE NUMERICALS ARE 2345.
5. CALLING OFFICE IS DESIGNATED AS OFFICE INDEX 1 OF THE RECORDER GROUP.
6. ENTRY INDEX 1 INDICATES THE TIMING ENTRIES OF THE CALL.
7. SINCE DISCONNECT TIME IS 52.9
   AND ANSWER TIME IS 41.1
   ELAPSED TIME IS 11.8 MIN.

A. DIRECTION OF TAPE MOVEMENT DURING READING OPERATIONS AT THE AMA CENTER.

B. DIRECTION OF TAPE MOVEMENT DURING PERFORATING OPERATIONS AT THE CENTRAL OFFICE.

Figure 14-5 Message Unit Call Entries on Central Office Tape

TCI Library: www.telephonecollectors.info

assembler-computer. The initial entries of these messages consist of two consecutive lines of information on the central office tape, except service observed (OBS) and message unit entries shown at the top of Figure 14-5.

2. Detail-Billed Messages

Toll messages, as defined for AMA purposes, are usually detail-billed to the customer and are calls made to points beyond the locally prescribed message unit area. More information is required to be recorded on these than on message unit messages, resulting in a 4- or 5-line initial entry, as shown at the top of Figure 14-6 and in Figure 14-7. In addition to recording information about the calling subscriber, toll messages require the recording of the called office and called number. Also recorded is the called area index and the called number structure. The accounting center computer or assembler-computer calculates the elapsed time to the nearest tenth of a minute after the application of the appropriate timing allowance. The elapsed time is then rounded off to the next highest full minute to give chargeable time. Charges are later calculated by punched card methods and are then individually itemized on the subscriber's toll statement.

When the customer makes certain direct distance dialed (DDD) calls, a 5-line initial entry is required in order to provide for the recording of the 3-digit national area code. An example of such a 5-line entry is shown in Figure 14-7. However, by means of "code compression," calls to nine selected, frequently called foreign areas may be recorded within the standard 4-line initial entry required for a toll call. With "code compression," the 3-digit foreign area code is compressed to a single digit which can be included in the standard 4-line initial entry without resorting to the perforation of a fifth line.

In order to permit correlation of AMA data with service observing results, means are provided for recording all calls that are service observed on a separate perforator in the assembler-computer

TCI Library: www.telephonecollectors.info

or computer. Entries are made on this tape on all service observed calls regardless of whether they are completed or not. All service observed entries are in the detailed form.

An infrequently used feature in AMA provides for recording and processing the details of message unit calls. To do this requires central office entries similar to those for toll calls (4-line entry), and a separate perforator in the accounting center or assembler-computer for message unit detail output. The actual customer billing is on a bulk-billed basis. This arrangement is not expected to be used except in special temporary cases where local conditions appear to demand it.

F. AMA EQUIPMENT

1. Perforators

The perforator performs the mechanical job of punching the paper tape for each entry. It is furnished on the basis of one per 100 outgoing trunks or district junctors.

2. Recorders

The recorder controls the perforator in making the record on the paper tape. While the functions of the perforators are very closely associated with the recorders, they are furnished as separate units due to their different physical locations within the office building.

3. Call Identity Indexer

The call identity indexer identifies the one trunk or district junctor out of the group of 100 with which each tape entry is associated. The call identity indexer, the recorder and the perforator form a group to serve the associated 100 trunks or district junctors. These groups are furnished as required to serve the trunks and junctors.

TCI Library: www.telephonecollectors.info

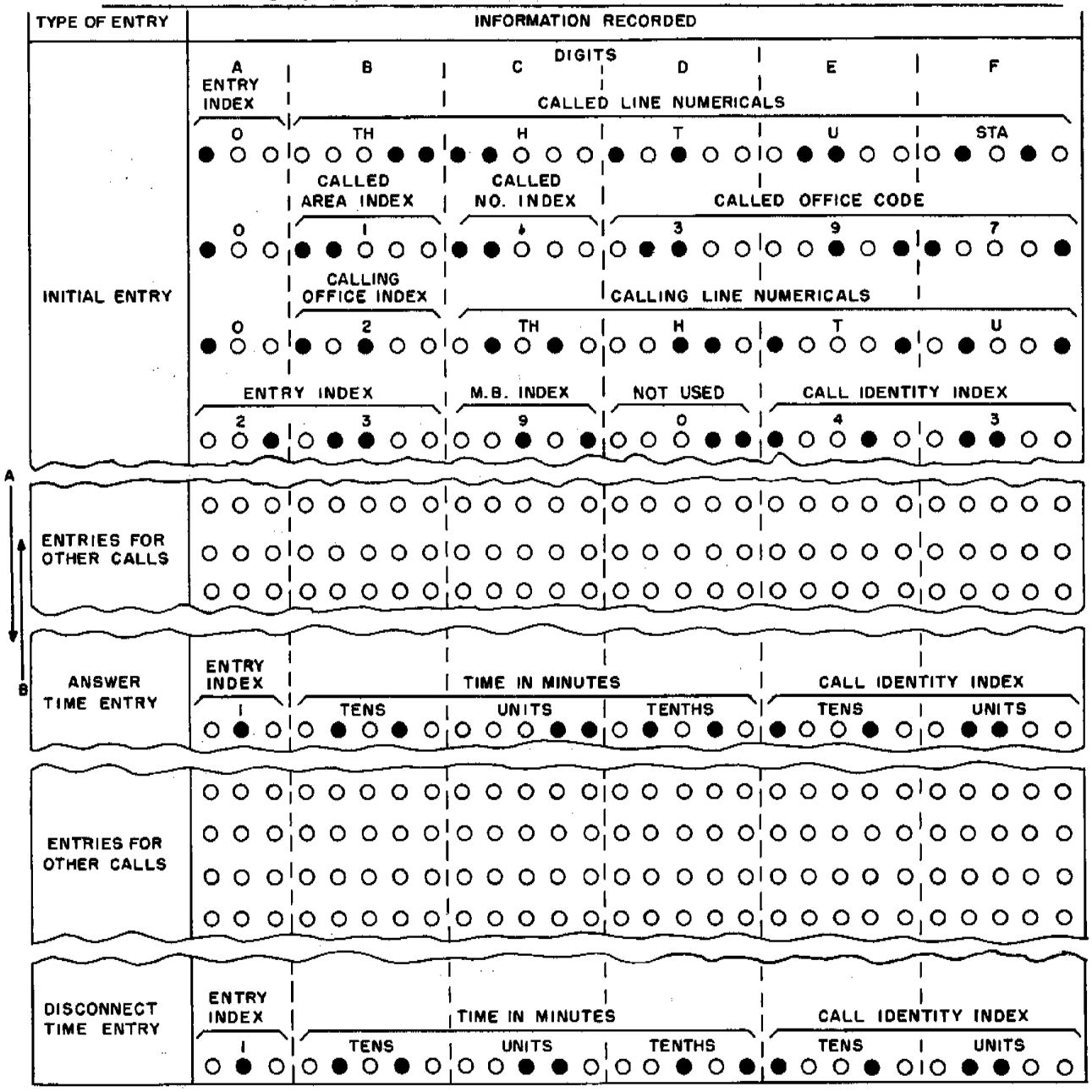

NOTES:

1. ENTRY INDEX 23 SHOWS THAT THIS IS AN INITIAL ENTRY OF 4 LINES
2. MESSAGE BILLING INDEX 9 SHOWS THAT IT IS TO BE BILLED AS A TOLL CALL.
3. CALL IDENTITY INDEX OF THIS CALL IS 43.
4. CALLING LINE NUMERICALS ARE 5678.
5. CALLING OFFICE IS DESIGNATED AS OFFICE INDEX 2 OF THE RECORDER GROUP.
6. CALLED AREA INDEX IS 1.
7. CALLED NUMBER INDEX IS 1 (INDICATES FOUR NUMERICALS AND PARTY LETTER).
8. CALLED LINE NUMERICALS ARE 0123. PARTY LETTER IS J.
9. CALLED OFFICE CODE IS 397.
10. ENTRY INDEX 1 INDICATES THE TIMING ENTRIES OF THE CALL.
11. SINCE DISCONNECT TIME IS 56.9
    AND ANSWER TIME IS 50.5
    ELAPSED TIME IS 6.4 MIN.

A - DIRECTION OF TAPE MOVEMENT DURING READING OPERATIONS AT THE AMA CENTER.
B - DIRECTION OF TAPE MOVEMENT DURING PERFORATING OPERATIONS AT THE CENTRAL OFFICE.

Figure 14-6 Toll Call Entries on Central Office Tape

TCI Library: www.telephonecollectors.info

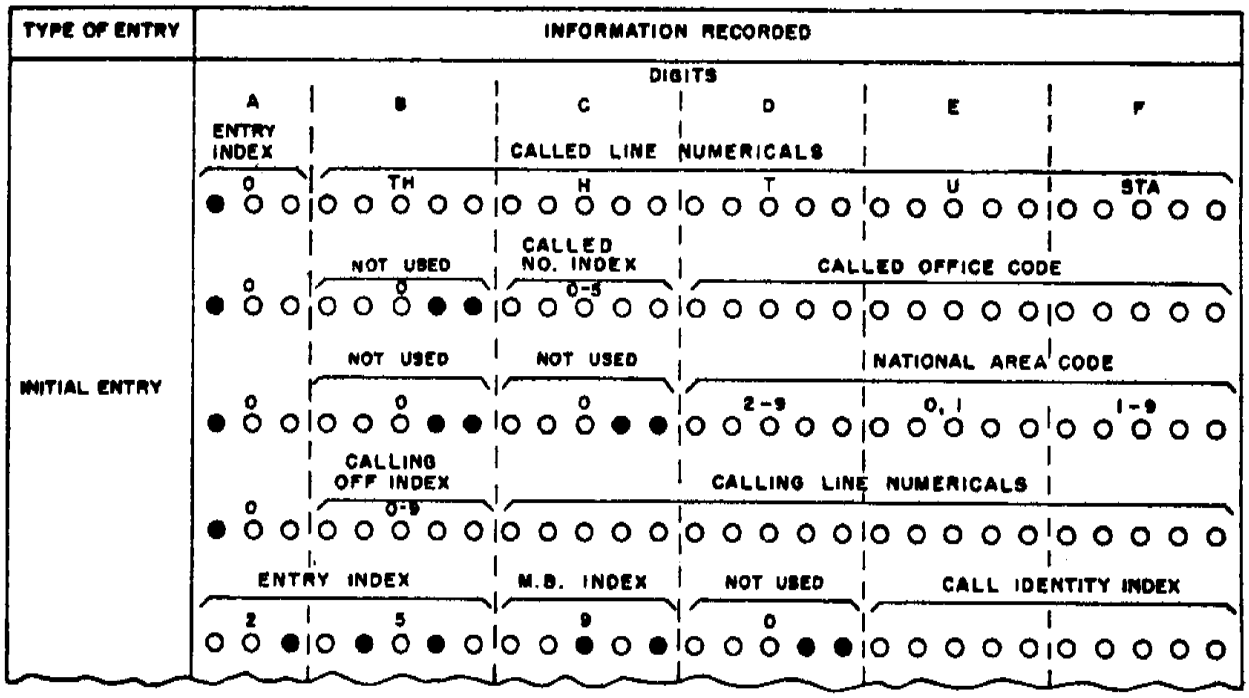

NOTES:
1. ENTRY INDEX 25 SHOWS THAT THIS IS AN INITIAL ENTRY OF 5 LINES.
2. NATIONAL AREA CODE SHOWS AREA TO WHICH CALL IS DIRECTED.
3. MESSAGE BILLING INDEX 9 SHOWS THAT CALL IS TO BE BILLED AS A TOLL CALL.

Figure 14-7 5-Line (DDD) Initial Entry
On Central Office Tape

4. Master Timer

The Master Timer furnishes information for the timing portion of the entries. It keeps track of the time in six second intervals (tenths of a minute) minutes, hours, days and months. The one master timer frame mounts two timing circuits (odd and even) with either circuit being used to control the time entries. Every minute the two timers check each other and the recorders to see that the timing selectors are in synchronization; any indication of the lack of synchronization will sound an alarm.

TCI Library: www.telephonecollectors.info

5. Trouble Recorder

The trouble recorder performs a maintenance function in that as a trouble condition occurs, a punched card record is made of the equipment involved and the circuit condition within the equipment. With this arrangement the AMA equipment can be freed to serve other calls and the maintenance personnel will have a record of the trouble condition.

6. Translator

The translator's functions are essentially the reverse of the number group or block relay frames in that it translates the equipment location of the calling subscriber into his office indication and directory number. This type of translation is required by the AMA equipment so the initial tape entry can identify the subscriber to be billed. The capacity of the translator is either 1000 or 2000 tip or ring subscriber line locations; the capacity varying according to system and vintage. Translation is obtained by using the "ring" translation technique. A lead for each line location is threaded through a series of coils. When an electrical signal is pulsed through the wire, a voltage is induced in each coil that the wire passes through. This voltage is detected by the electronic circuits, one for each coil. The coils represent the units, tens, hundreds, thousands and office of the calling number.

7. Transverter

The transverter can be described as the marker of the AMA system, in that it controls the other equipment on the initial entry. The transverter receives information from the sender, as covered previously. This information along with the calling line number from the translator permits the transverter to instruct and control the recorder in making the entry.

TCI Library: www.telephonecollectors.info

8. Transverter Connector

The Transverter Connector interconnects the sender and the transverter, for the transfer of information. Each connector has access to all transverters and in No. 1 Crossbar offices serves 10 senders; while in No. 5 Crossbar offices, the connector serves five senders.

14.3 LOCAL AUTOMATIC MESSAGE ACCOUNTING (LAMA)

A. GENERAL

Local Automatic Message Accounting, LAMA, is a system in which recording equipment is located within the local office and serves only subscribers assigned to that office or group of offices.

The logic circuits of the central office switching system recognize, on each call, whether the subscriber placing the call has flat-rate or message rate service; they also recognize whether the destination called is to be billed on a local (message unit) or toll basis.

Block schematics of the AMA equipment for use in No. 1 and No. 5 type of Crossbar offices are shown in Figure 14-8. Inspection of these two schematics show considerable similarity between the two systems: the difference being in the switching equipment itself.

B. TYPICAL OPERATION

1. Common Control Equipment Functions

In No. 1 Crossbar offices the digits dialed by the subscriber are temporarily stored in the subscriber sender. When the originating marker performs the route relay operation, it determines from the class of service of the calling subscriber and the called office code, what charge, if any is to be made for the call. It is capable of recognizing eight different charging rates for message unit charging, message billing index 1-8. All calls for which the charging rate is in excess of these eight message unit rates are grouped into the toll call category, message billing index 9.

TCI Library: www.telephonecollectors.info

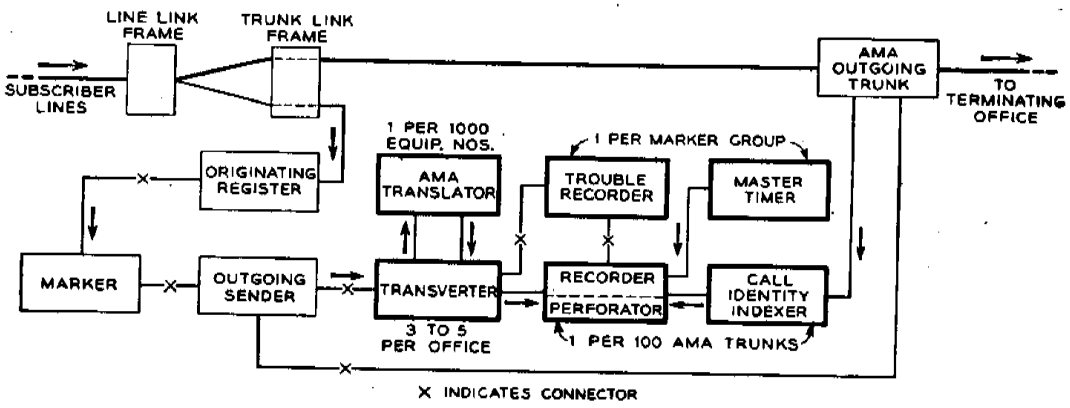

No. 5 Crossbar Office

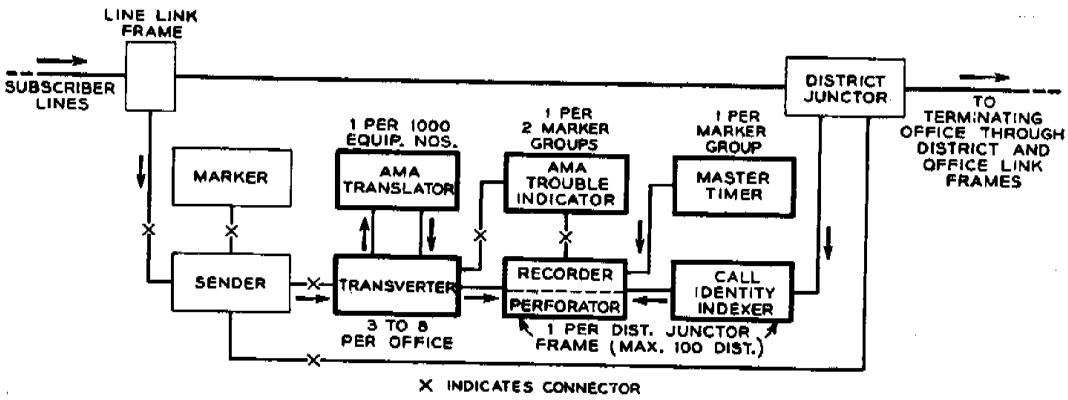

No. 1 Crossbar Office

Figure 14-8 Block Diagrams of the LAMA Circuits Associated With Crossbar Offices

After the marker has informed the sender that the call requires an AMA record and as soon as the subscriber has completed dialing, the sender seizes the AMA transverter. The sender tells the transverter the message billing index, the type of entry required, the number dialed, the recorder number, as well as the line location and party identification of the calling subscriber.

TCI Library: www.telephonecollectors.info

The message billing index and the type of entry is obtained from the marker. The recorder number is represented by the district link number, which is needed to complete the call, since the 100 junctors of one district group are assigned to one recorder. The line location is obtained from the line link controller at the time of sender seizure. Party identification is part of the sender's function.

The No. 1 Crossbar system was designed and installed previous to the development of AMA. Therefore, circuit changes were required in order to obtain and convey the AMA information. Part of these changes could not be incorporated into the existing frames and units. Consequently auxiliary equipment is furnished to transmit the line location from the line link frame to the LAMA equipment. This equipment takes the form of a district group connector frame, a sender group connector unit, and a calling line register frame. A block schematic of this equipment is shown in Figure 14-9. This equipment is furnished as follows: one district group connector per sixteen line link frames, one sender group connector per district group, and one calling line register frame per 30 senders.

In No. 5 Crossbar offices the originating register functions as a temporary storage unit for the calling line location and class of service, in addition to its main functions of counting digits and making party identification. When dialing is completed, all of this information is transferred to the marker. The marker from its route relay operation recognizes an AMA call and determines the message billing index, type of entry required and the number of the recorder that the outgoing trunk is associated with.

When the marker selects an outgoing sender, it gives it the AMA information: message billing index, type of entry, dialed number, recorder number, calling line location, party identification, as well as all of the information needed for outpulsing. If the call is intraoffice, an outgoing sender is selected to permit the AMA record to be made even though the sender performs no outpulsing functions.

TCI Library: www.telephonecollectors.info

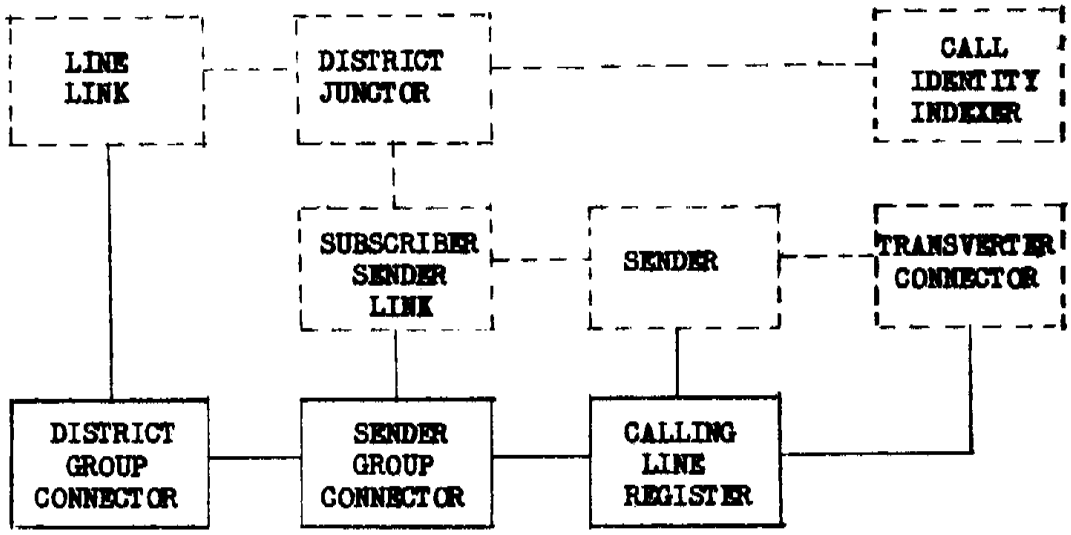

Figure 14-9 Auxiliary Equipment in a No. 1 Crossbar Office for Transmission of the Line Location

2. AMA Equipment Functions

The action of the AMA equipment is essentially the same for both crossbar systems; therefore, the following explanation will apply to either system.

As soon as the sender has stored in its memory circuits all of the AMA information and the call has progressed to the stage where the AMA entry is to be made, the sender sends a start signal to the transverter connector. The connector seizes an idle transverter and connects 120 or 150 leads, depending upon the system, from the sender to the transverter. Information that has been stored in the sender is transferred to the transverter over these leads.

TCI Library: www.telephonecollectors.info

The transverter by using the calling subscriber's line location and party identification, seizes the proper translator frame, signaling to it the identity of the line placing the call. The translator translates the line location into directory number information and sends this information back to the transverter. The transverter then seizes the recorder that the trunk or junctor is assigned to, and instructs it as to what is to be recorded on a 2-line, 4-line or 5-line initial entry. During the recording process, a signal for the trunk or junctor to identify itself is sent via the sender. The call identity indexer recognizes the trunk or junctor requesting identification and gives the 2-digit identity index to the recorder for entry on the tape.

The sender does not outpulse all of the digit information until the transverter informs it that the initial entry is completed. Should trouble be encountered in the AMA equipment preventing a successful entry, the call can still be blocked by the sender. In practice, local calls are permitted to be completed without charge in case of failure in the AMA equipment while toll calls are blocked.

When the recorder completes its recording job, it signals the transverter; the transverter then releases the recorder. The transverter signals the sender that a record has been made and releases itself from the connector, making itself available for other calls.

There will be a time lapse before the called party answers. During this time the recorder and perforator can be used for entries involving any of the other 99 trunks or junctors. At the time the called subscriber answers, the off-hook signal is recognized by the trunk or junctor; whereupon it signals the call identity indexer. At this time if the recorder is idle or as soon as it becomes idle, a 1-line answer entry is recorded. The 1-line entry is a time entry showing the time in minutes, tenths of a minute and the identity index of the trunk as covered previously.

TCI Library: www.telephonecollectors.info

At completion of the call, the trunk or junctor will recognize the on-hook condition of the subscriber's line and again signal the call identity indexer for disconnect entry. The disconnect entry is a 1-line time entry, the same as the answer entry except for recorded time. Therefore, each completed call will have three entries, initial and two time entries; while "don't answers" will have only two entries, initial and one time entry, which will be discarded by the accounting center.

14.4 CENTRALIZED AUTOMATIC MESSAGE ACCOUNTING (CAMA)

Extended customer dialing, as provided for by the original AMA equipment, had certain limitations. For instance, there are many offices in areas where the dialable traffic to charge points is relatively light and the installation of AMA equipment would not be economical. Also, in offices actually equipped with AMA, the equipment for the automatic identification of the calling customer for charge purposes recognizes only individual and two-party customers; therefore, other multi-party customers must place their charge calls through an operator. In the existing dial offices of the panel type, the design of LAMA equipment would prove rather costly and, even if available, might well be prohibited by the lack of floor space in the existing office. Centralized Automatic Message Accounting (CAMA) was developed to care for these subscribers that could not be served by LAMA. This system locates the recording equipment in a central location which serves a number of central offices.

CAMA arrangements were initially available in crossbar tandem offices on a PCI basis only. PCI pulsing was available from Panel, No. 1 and No. 5 Crossbar offices; thus, the maximum number of lines was served by this type of pulsing.

Dial Pulsing and Multifrequency pulsing is now available for the tandem offices. The CAMA technique has been expanded to other systems, No. 4 (type) Crossbar, No. 5 Crossbar, and intertoll SXS offices. Also, any type of local mechanical office can be handled by a CAMA system.

In addition to the work functions of LAMA, CAMA has other problems to solve. In LAMA the equipment must be able to identify a maximum of ten calling office designations. CAMA has the additional problem of identifying one of a possible 20 recorder groups with a maximum of 200 originating

TCI Library: www.telephonecollectors.info

offices. These offices may have widely differing rate treatments even though the actual charge on a particular call is one of 13 message billing indexes. Two central offices, for example, may have identical rates on calls to 25 other offices but different rates on calls to the 26th, and the CAMA equipment must provide for the various combinations. Identification of the calling customer, of course, is necessary for proper billing. There are two techniques used to identify the calling subscriber. The first method used is operator identification. The second method is automatic and is covered under the heading, Automatic Number Identification.

The charging rate (billing index) is obtained from the billing indexer frame. In this frame the originating point of the call is compared with the destination of the call, as well as the rate treatment of the calling subscriber, to determine the message billing index number (0-12). While the function of the billing indexer is closely related to the transverter circuitry, the physical size and cost of the billing indexer exceeds the transverter. Since the operating time of the billing indexer functions is a fraction of the transverter operating time, fewer billing indexer circuits can be furnished by separating them from the transverters. Twelve transverters, which is the maximum size of a transverter group, can be served with three billing indexers.

The identification of the calling subscriber as it was done initially, and still is in many offices, was accomplished by the CAMA office setting up a connection to an operator before seizing the transverter. The operator requests the number of the calling subscriber's telephone from the party originating the call. This number is keyed into the sender for transfer to the transverter. Considerable operator effort is saved since she does not make out a ticket, obtain routing, select a trunk, time or supervise answer and disconnect of the call.

In order for each sender to have access to a CAMA operator for obtaining the calling number, position link circuits are furnished. Each position link frame has capacity for 40 senders and 100 positions. If more than one frame is required for sender capacity, each frame has access to the same positions. The links through the position link frame are established on crossbar switches by the controller. Provision is made so that during a light load period one operator does not receive the majority of the calls while others are idle.

TCI Library: www.telephonecollectors.info

A. CROSSBAR TANDEM CAMA

The block schematic for the CAMA portion of the crossbar tandem office is shown in Figure 14-10. The call is received and routed through the office in the normal manner. Near the end of the incoming pulses the sender sends a signal to the position link requesting connection to an operator position. This signal is started so the operator position is seized by the end of pulsing. A lamp indication informs the operator that she has a call connected to her position. After the operator has asked for and received the calling subscriber's number, she key-pulses this number into the sender.

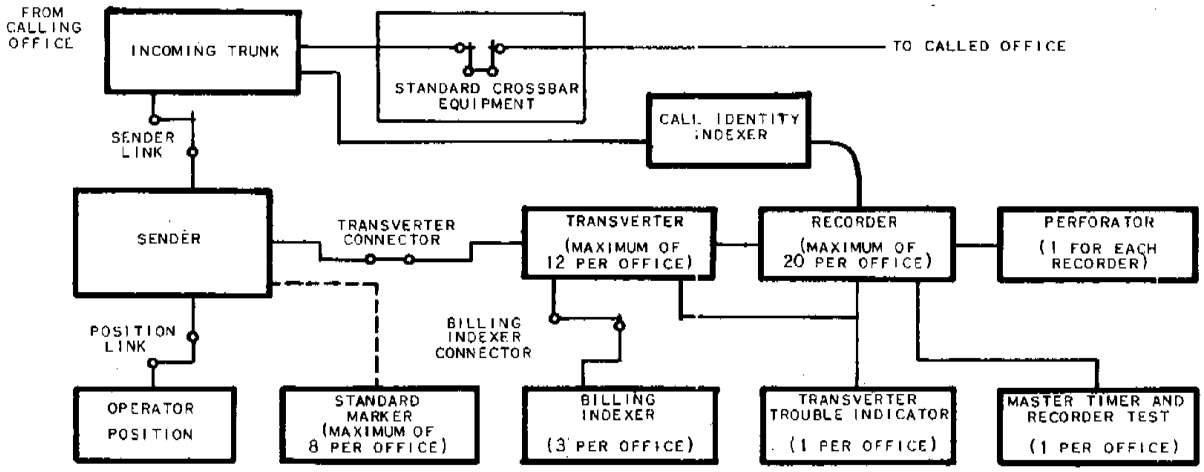

Figure 14-10 Block Diagram Illustrating the Operation of CAMA Equipment in a Crossbar Tandem Office

The sender has now been connected to a transverter. The transverter compares the calling and called number. If they are the same, a reorder signal (flashing lamp) is returned to the operator. Since this indicates that the customer has mistakenly given the called number, the operator again requests the calling number and keys this number into the sender. If the transverter had found that

TCI Library: www.telephonecollectors.info

the two sets of numbers it receives are different, as they should be, it will instruct the sender to release the connection to the operator and proceed to make the initial entry.

The transverter seizes a billing indexer in order to obtain the billing index and type of entry. The remaining operations are the same as in a local office; in that the transverter seizes a recorder for recording the initial entry and causes the call identity indexer to identify the trunk.

Operation with local step-by-step offices, without common control, differs in the method of receiving pulses; however, the AMA operation remains the same. When the tandem office is receiving pulses from a common control type of office, the transmission of pulses is not started until the tandem sender is connected to the incoming trunk. When the tandem office receives pulses from direct control offices, the sender must be attached during the interdigital timing interval, unless the subscriber has been instructed to wait for second dial tone. This connection may require a longer period of time than the interdigital time of the calling subscriber's dial pulses and could cause the sender to miss some of the digits, in all, or in part.

Incoming registers are used on trunks incoming from these local step-by-step offices. By-link paths are established between the trunk and register to avoid missing any of the dial pulses. When the regular link path is established, it parallels the by-link path, which was established very quickly after trunk seizure. The by-link path is now released. The first three digits are stored in the incoming register. By the time the incoming register has recorded the third digit a connection has been established from the trunk to a DP sender. The first three digits are transferred from the register to the sender and the call will now proceed the same as other CAMA calls. A partial block schematic for this portion of a call is shown in Figure 14-11.

B. #4 TYPE CROSSBAR CAMA

Figure 14-12 is a partial block schematic showing the CAMA circuits in a #4A Crossbar office. Inspection of this figure will show the same equipment, by name, is used in the #4A office as is used in the tandem CAMA office, except for the addition of the trunk class translator.

TCI Library: www.telephonecollectors.info

In crossbar tandem the class of the trunk and the recorder number are obtained from the trunk and given to the sender for temporary storage. In #4A Crossbar the trunk class translator makes this translation and gives the class information to the decoder and translator at the time it is required, relieving the sender of this storage function.

Another difference in operation from tandem is in the incoming register and incoming sender. The CAMA sender is of the MF pulsing type. If the local officel is capable of sending MF pulses the local office will pulse directly into the sender. If the local step-by-step office is not equipped with senders, the DP incoming register is required. This register and associated register link is of the by-link type for quick connection to the trunk. Instead of receiving only the first three digits the register receives all the digits and then when connected to a sender through the trunk, transmits the digit information to the sender by MF pulsing.

The trunk class mark, which is needed for routing as well as by the billing indexer, is obtained by decoder. The connection to the operator position and the recording on the AMA tape is done in the conventional CAMA manner.

C. Step-by-Step Intertoll CAMA

1. Equipment

CAMA features can be added to the step-by-step intertoll office by the addition of common control equipment; registers, senders, decoders, etc.

The block schematic of the step-by-step intertoll office arranged for CAMA is shown in Figure 14-13. The switching network of the office still uses trains of step-by-step switches; however, the control of the switches is under control of a sender.

TCI Library: www.telephonecollectors.info

The principal common control units, other than AMA units, used in step-by-step CAMA offices are:

a. Registers

The principal function of the register is to store all of the incoming dial pulses and then to transmit these digits to a sender by means of MF pulsing.

b. Senders

The senders store the called number as well as control outpulsing. The sender also provides various circuits with information about the call; this information is used for selection, switching, and charging. As a result of the various exchanges of information the sender is advised as to what type of outpulsing (MF or DP) is required and then proceeds to outpulse the called number.

c. Decoders

From information received from the sender, the decoder determines the routing of the call, including the routing through the SXS office. The primary function of the decoder may be classified as translation.

d. Trunk Class Translator

The trunk class translator circuit is only provided in larger offices. Its function is to supply additional information to the decoder about the call in the form of trunk class marks.

2. Method of Operation

A subscriber in a local step-by-step office must first dial an access code to reach a CAMA office. A typical access code is 112. When the customer dials this code he is connected at the local step-by-step office to an outgoing trunk to the CAMA office. When the incoming CAMA trunk at the step-by-step CAMA office is seized, it causes a link circuit to select an idle register (connections #1 and 1A). This connection is established during the interdigital time between

TCI Library: www.telephonecollectors.info

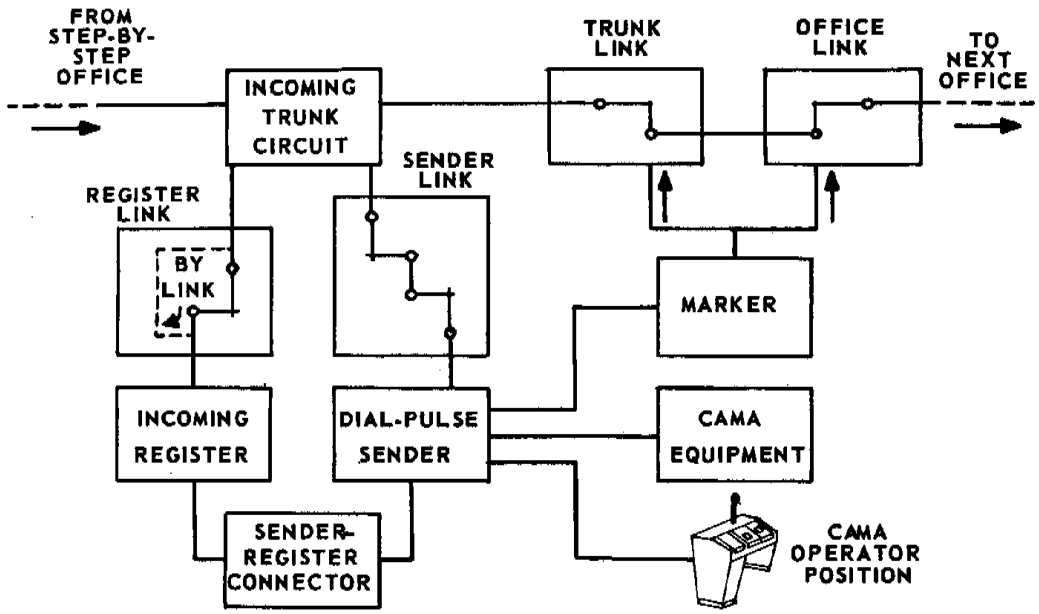

Figure 14-11 Block Diagram of the Arrangement in a Crossbar Tandem Office for CAMA to Work with Step-by-Step Offices

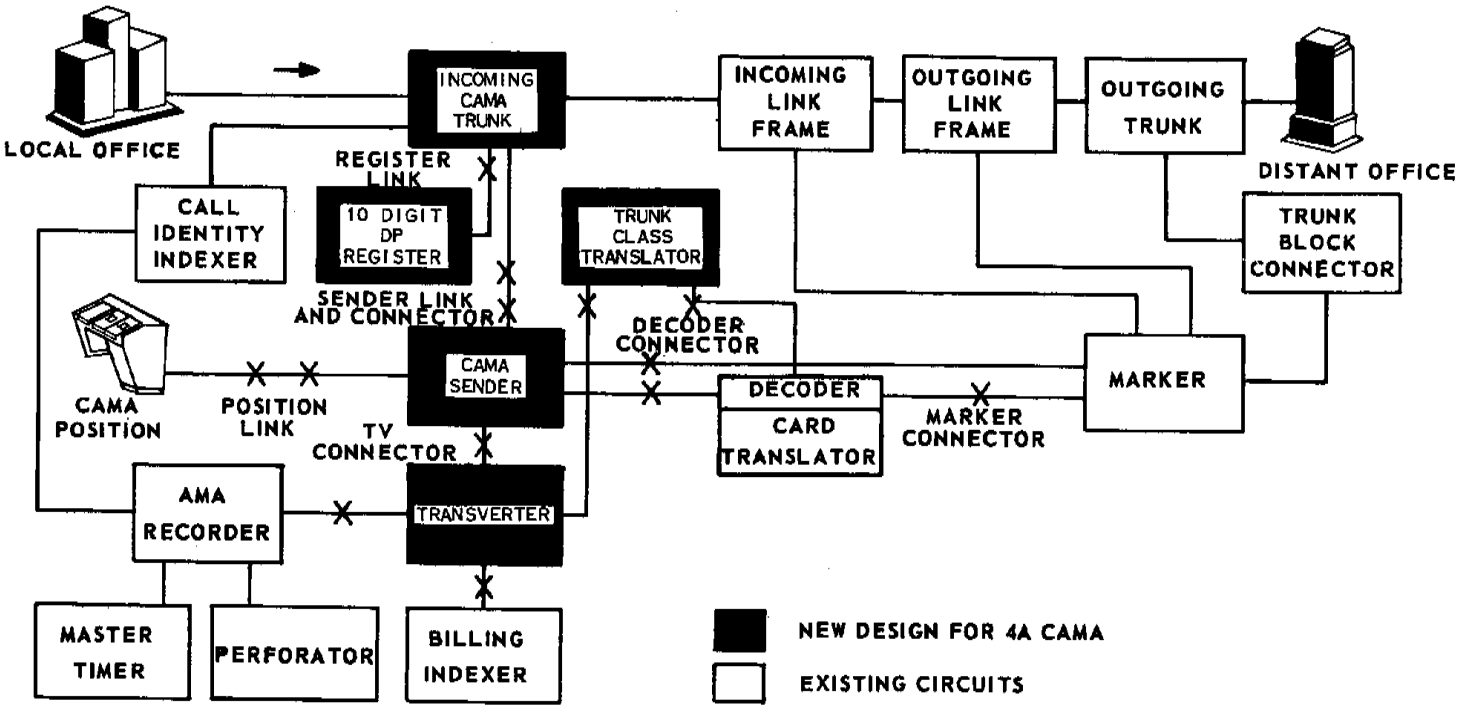

Figure 14-12 Partial Block Schematic of the New Design for 4A CAMA

TCI Library: www.telephonecollectors.info

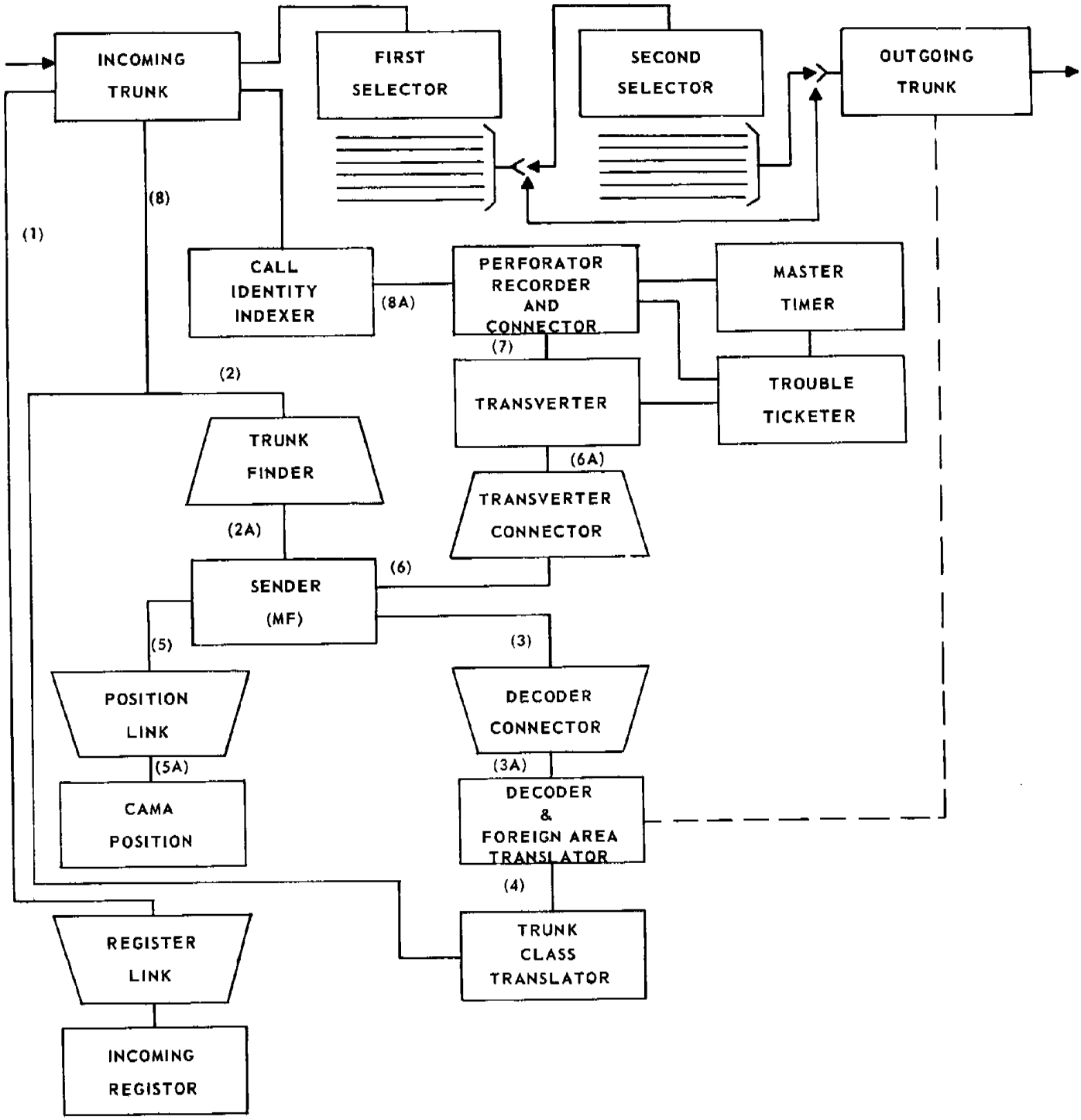

Figure 14-13 Block Schematic of Step-by-Step Intertoll Office arranged for CAMA Office

TCI Library: www.telephonecollectors.info

the dialing of the directing code and the dialing of the area code or the office code. No indication is returned to the customer that a register has been attached. The customer continues to dial the called number without pause. If a register is not attached in time to receive the incoming digits, the trunk is arranged to return reorder tone to the customer.

The incoming digits are registered in the register, which has a maximum capacity of 10 digits. After the sixth digit of a 7-digit call has been received or when the ninth digit of a 10-digit call starts to come in, the register causes a signal to be sent through the trunk for connection to an idle sender (Connections #2 and 2A).

The trunk secures access to the sender through the trunk finder. When the sender is attached, it signals the register that it is ready; then the register outpulses on an MF basis the digits it has registered. After outpulsing the called number, the register is released.

If the call originates from a No. 5 Crossbar office on a MF basis, a sender is attached immediately after the incoming CAMA trunk is seized. The called number is then registered directly in the sender.

When the sender has registered the sixth digit of a 7 or 10-digit call, it proceeds to call in a decoder through the decoder connector. (Connections #3 and 3A).

When the decoder is attached, the sender presents to it the first six digits it receives. The decoder uses this information (and in some cases other information) to determine the routing necessary for the call. It instructs the sender which of the received digits must be outpulsed, what digits are to be prefixed, and the type of the outpulsing that must be used. After transmitting this information, the decoder is released.

Associated with the decoder are circuits and features which may be provided on an optional basis (these circuits are shown in dotted lines on the block diagram). One of these circuits

TCI Library: www.telephonecollectors.info

the foreign area translator, actually functions as a part of the decoder. The foreign area translator is used to provide additional routing information when required (six digit translation).

Another optional circuit is the trunk class translator. This circuit is provided when the incoming trunks require different class marks. When this is necessary, the trunk class translator provides the class marks of the incoming CAMA trunks to the decoder (Connection #4).

A group busy feature is also provided on an optional basis. This feature permits the decoder to determine if there is an idle trunk available in a trunk group. The group busy test feature does not verify that a path through the switching network is available, but does verify that one or more trunks in the desired group is available. This feature may be used in conjunction with the alternate routing feature of the decoder.

While the decoder is engaged, the sender completes its registration of the called number. When it has registered the last digit, the sender proceeds to make a bid for a CAMA position (Connection #5 and 5A). If for some reason there is a delay in obtaining an operator, audible ringing tone is returned to the customer until the talking path is established.

When a position is attached, the operator is given order tone and a talking path is established between the operator and the customer. The operator then obtains the calling number and MF keypulses it into the sender.

On calls which route to or through common control offices, the sender begins outpulsing with the start of registration of the calling number. However, if the call does not go through a common control office, the sender will not start outpulsing until the decoder has been released. In either case the last digit is not outpulsed until the CAMA recording is completed. With this method of operation, level hunting connectors in terminating offices must be modified to wait until the units digit is received before they start hunting for an idle line.

TCI Library: www.telephonecollectors.info

A transverter is seized by the sender after the latter has received the units digit of the calling number (Connections #6 and 6A). The transverter receives from the sender the details necessary to make a record of the call. It translates this information into a form satisfactory for recording and the call is recorded in the conventional manner (Connections #7, 8 and 8A).

The CAMA equipment constitutes a separate train designed to handle CAMA calls. The only exception to this is for calls which have originated from and already been recorded at a No. 5 Crossbar LAMA (local AMA) office. These calls may be received on a non-CAMA MF basis. Use may be made of the CAMA senders and decoders to route through the CAMA selectors and to alternate route if desirable. This is the only non-CAMA traffic which this system is designed to serve.

14.5 AUTOMATIC NUMBER IDENTIFICATION - ANI

Automatic number identification is designed for use in offices served by various types of CAMA centers. It is a means, as the name implies, of making an automatic number identification of the calling party for recording on the AMA tape. This will eliminate the necessity for operator effort in making the identification.

The equipment for this identification is located in the local office (any mechanical type) and responds to signals from the CAMA office for transmitting the calling number. The identified number is transmitted to the CAMA office via MF pulsing.

A. STEP-BY-STEP, PANEL, #1 CROSSBAR

The general method of operation for these three systems is so similar that they have been grouped together under one description.

The block schematic of the ANI equipment is shown in Figure 14-14. Identification is made one number at a time by applying a 5800-cycle tone to the subscriber's sleeve lead and detecting this signal with electronic detectors.

TCI Library: www.telephonecollectors.info

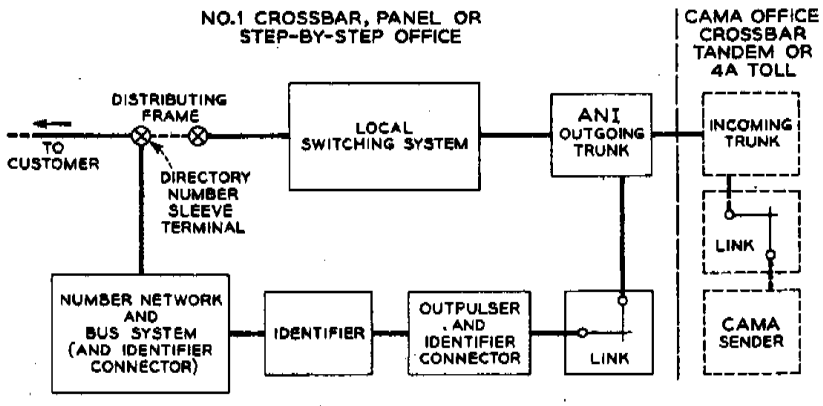

Figure 14-14 Block Diagram of Automatic Number Identification System

1. Number Network Frames

The number network frames contain a network field, which furnishes a network termination for each line, and a two-stage bus system. Each frame has a capacity of 2000 lines; five frames being required for a 10,000 number series. The network and associated bus system are passive systems in that they furnish a channel for transmitting in identification signals from the line to the detector circuits.

The bus system consists of a primary and two secondary systems for each 10,000 directory numbers. The primary buses are arranged in a 100 by 100 grid system so that each cross point represents one directory number. The two secondary bus systems are 10 by 10 grid arrangements using resistors instead of the R-C buses of the primary system. Primary buses are not scanned directly because it would require a large number of detectors. The secondary bus system converts the one-out-of-a-hundred signals of the primary system into decimal digits. The principle of the two-stage bus system is shown in Figure 14-15.

TCI Library: www.telephonecollectors.info

Cross connection between the primary and secondary systems provide a means of grouping directory numbers to reduce the number of detectors required.

Each cross point in the primary bus system is formed by the intersection of five buses. The vertical buses provide a tip, ring and multi-party connection for each directory number while the horizontal buses provide tip and ring connection. This arrangement produces a tip field and a ring field completely independent of each other. These independent fields are used in identifying numbers associated with two-party lines.

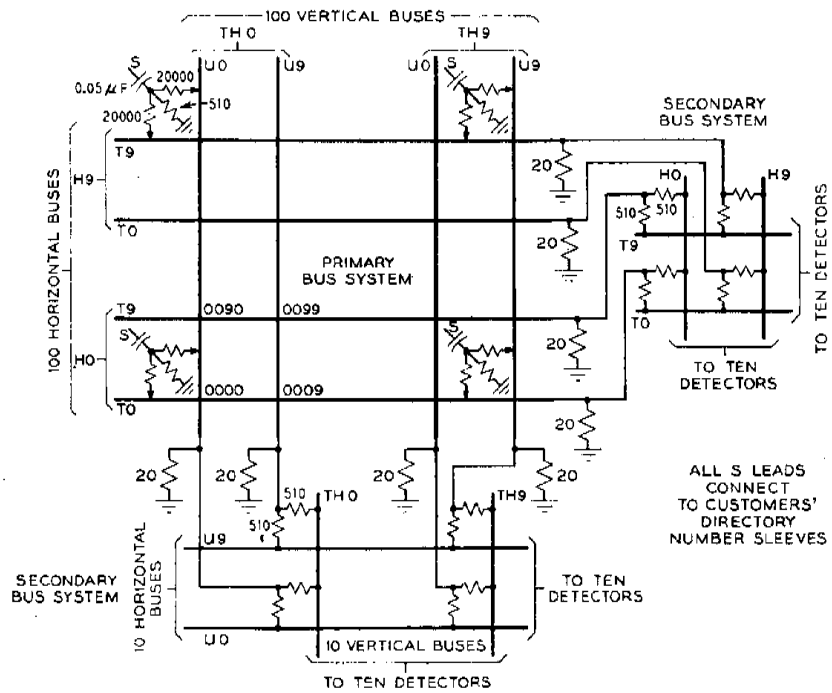

Figure 14-15 Number Network and Bus System

TCI Library: www.telephonecollectors.info

2. Identifier

The identifier is made up of detectors, steering circuits and translators. Ten number detectors under control of the steering circuits scan the output leads of the secondary busy systems. The signal applied to the number network and identified by the detectors is a 5800-cycle tone. The steering circuits connect the detectors to the thousands, hundreds, tens and units digits in sequence.

In addition to the number detectors, supplementary detectors are provided to identify calls from four-party and multi-party lines and calls being observed.

Only one identifier can make an identification at a time. One identifier will serve up to sixty thousand directory numbers. The average identification time is less than one third of a second, varying slightly with the number of offices to be scanned. The one identifier will care for traffic originated by most groups of six offices. Normally, however, a second identifier is provided for maintenance. If a building contains more than six offices, a second identifier group including passive network and outpulsers must be provided. Separate out trunk groups must also be provided.

3. Outpulsers

The outpulser is the equipment unit that controls the identification process. It receives party test information from outgoing trunks or obtains this information itself, when required, by making party test. It verifies that the calling customer has not disconnected before proceeding with the identification.

As the digits of the directory number are identified by the identifier, they are registered in the outpulser. The outpulser translates the office identity it receives from the identifier into the three digits of the calling office code. When all seven digits of the calling customer's directory number have been obtained, they are outpulsed, along with the appropriate information digit to the CAMA office by means of MF signaling.

TCI Library: www.telephonecollectors.info

The outpulser is provided with checking and timing features so that it can detect a trouble promptly. In this event, the outpulser calls in a trouble-recording medium known as the "trouble ticketer" and provides it with information for printing the trouble record. After making the trouble record, the outpulser makes a second trial identifier seizure.

Outpulsers are provided as required by the volume of Direct Distance Dialed traffic. An identifier group is arranged for a maximum of seven outpulsers to provide for traffic and maintenance usage. If more than seven outpulsers are required, a second identifier group must be established.

4. Outpulser Connector

All outgoing trunks in an identifier group have access to all outpulsers in that group. Connection of a trunk to an outpulser is established through an outpulser connector.

5. Method of Operation

When a CAMA office has advanced the call to the stage where the number of the calling subscriber is required, a signal is sent to the ANI outgoing trunk of the local office for calling number identification.

In the local office the call has been completed through the switching network in the normal manner. Upon receipt of the signal from the CAMA office, the trunk signals its outpulser connector for connection to an outpulser.

The outpulser seizes the identifier. At the same time it is connected to the identifier, it signals the trunk and the 5800-cycle oscillator to apply the 5800-cycle signal to the holding ground of the sleeve lead.

At the primary network, this signal goes through both the tip and ring networks. Only one of these primary networks is connected to the secondary network of the identifier. The tip or ring party identification of the calling

TCI Library: www.telephonecollectors.info

party determines which primary network is connected to the secondary network. The identifier scans the ten leads representing the thousands digits; then the leads for the hundreds, tens, and units digits; thus, reducing the number of detectors required.

The identifier group has a capacity of 60,000 subscribers; therefore, in addition to the four digits identifying the subscriber's number, office identification is also required. The identification of the office is obtained by the identifier scanning the leads representing the thousands digits of each office until a signal is detected. The identifier then informs the outpulser which group of thousands leads (office indication) the signal was found on and proceeds to identify the last four digits of the subscriber's number.

As was indicated previously there are two primary networks, one for tip party subscribers and one for ring party subscribers. The identifier must know party identification in order to make the proper connection.

The party identification is obtained in a different manner in each of the three systems; No. 1 Crossbar, Panel, and Step-by-Step. In the No. 1 Crossbar system, tip and ring party information is registered in the originating marker in the standard manner while the call is being switched. This information is forwarded to the ANI trunk while the marker is setting up the switch linkages. From the trunk, the information is passed on through the outpulser link to the outpulser and then to the identifier. In the panel system the district selector makes the party test and records party information but it is not feasible to pass the information forward to the trunk. Therefore, the ANI equipment must make a party test of its own. This is done by the outpulser, which recognizes the conventional ringer ground through the switchhook as indicating a tip party. In the Step-by-Step system, a party test is made by the ANI trunk during the interdigital time betweem the first two digits dialed

TCI Library: www.telephonecollectors.info

after the trunk is reached, and the result is forwarded to the outpulser, as in the case of the No. 1 Crossbar trunk.

Party identification cannot be made on lines with more than two subscribers. The ANI equipment is not capable of identifying those numbers. The fact that an identification cannot be made is recognized by the identifier.

When the information obtained by the identifier is recorded in the outpulser, the identifier releases. The outpulser transmits the recorded information to the CAMA office and then releases its connection to the outgoing trunk.

B. NO. 5 CROSSBAR

The approach used in No. 5 Crossbar offices for ANI is different than that used in the other local offices. Some of the same equipment is used for ANI as is used for LAMA and the operation of the equipment is basically the same. The equipment used is the translator, the transverter and the transverter connector.

At the completion of outpulsing the called number, the outgoing sender summons a transverter in the normal manner, giving it the calling subscriber's line location. The transverter seizes the translator for the translation of line location into directory number. At this point instead of attempting to call in the recorder, perforator and call identity indexer, which are not furnished, the transverter passes the calling number to the outgoing sender for transmission to the CAMA office. The AMA equipment then releases.

C. TRANSMISSION OF INFORMATION TO CAMA

With any of the previous methods of ANI operation, the CAMA Office sends a signal to the local office requesting the calling number. The outpulser or the outgoing sender sends the information by multifrequency pulsing.

The information is sent in the following order: KP signal, information digit, three-digit office code, four numerical digits and ST signal. The KP and ST signals

TCI Library: www.telephonecollectors.info

use the conventional frequencies that serve to actuate a receiver at the beginning and end of a sequence of information. The information digit serves to indicate one of four conditions:

1. Calling customer identified automatically.

2. Calling customer on a four-party or multi-party line, and therefore requires identification by the CAMA operator. No office or numerical digits are sent for these calls.

3. Calling customer is under service observation, and therefore the AMA record for his call requires a service-observing mark in addition to the usual information.

4. Calling customer could not be identified because of trouble in the automatic equipment. This condition requires identification by the CAMA operator. No office or numerical digits are sent for these calls.

When all digits have been outpulsed, the outpulser is released, or the outgoing sender releases and the trunk is closed through for the talking condition.

14.6 AUTOMATIC MESSAGE ACCOUNTING CENTER

A. GENERAL

Although the charging information for telephone calls is recorded in the central offices, all the work of telephone message pricing, billing, and bookkeeping for the Bell System is concentrated in the accounting centers (Figure 14-16), their related punched card toll units and revenue accounting offices. In addition to its magnitude, this message accounting job has, of course, very exacting requirements of accuracy and promptness. Perhaps the most challenging factor in message accounting is, however, the need for the highest efficiency, since the accounting costs must add but a negligible amount to the low price of billable telephone messages.

These basic characteristics of the message accounting job had a controlling influence on the design of the machinery for the AMA center. The original message data for

TCI Library: www.telephonecollectors.info

the AMA center's system is recorded in central offices as patterns of perforations on paper tapes. These tapes are then sent periodically to the accounting center where machinery performs the various data-processing tasks.

The accounting center consists mainly of machines into which the central office tapes are fed. Each machine contains a reader which recognizes the arrangement of the holes in each line of tape and provides means for (1) perforating new tapes, (2) printing of the last set, or (3) punching a card for subsequent processing, using punched card procedures. The final output of these machines provides material from which charges can be computed in the punched card accounting office.

B. PROCESSING ORDER

The machine operations involved in accounting center processing are shown in Figure 14-17. The central office tapes of a given recorder group are fed to the assembler-computer or to the assembler as shown at the top of the diagram. The assembler-computer, Figure 14-18, was developed to combine, in a more economical way, the features previously incorporated in individual assemblers and computers. It will be used in new AMA centers and for additions on replacements in existing centers.

Subsequent sorter, summarizer, and converter processing for message unit messages, and converter processing alone for toll messages, result in a punched card output which is then processed on commercial business machines.

In each of these stages, the processing consists of feeding tapes into a machine in the proper order, collecting the output, storing it when necessary, and arranging them for input to the next stage.

The operations performed in any of these stages are controlled by manually setting the control panel switches of the accounting center machine involved. The leading end of the tape contains identification information which corresponds to the setting of the control panel. The machine checks the tape identification against this setting before the operations can proceed. In transferring the output tapes from one stage of operation to the next, all tapes are tagged or stamped to indicate the processing already completed.

TCI Library: www.telephonecollectors.info

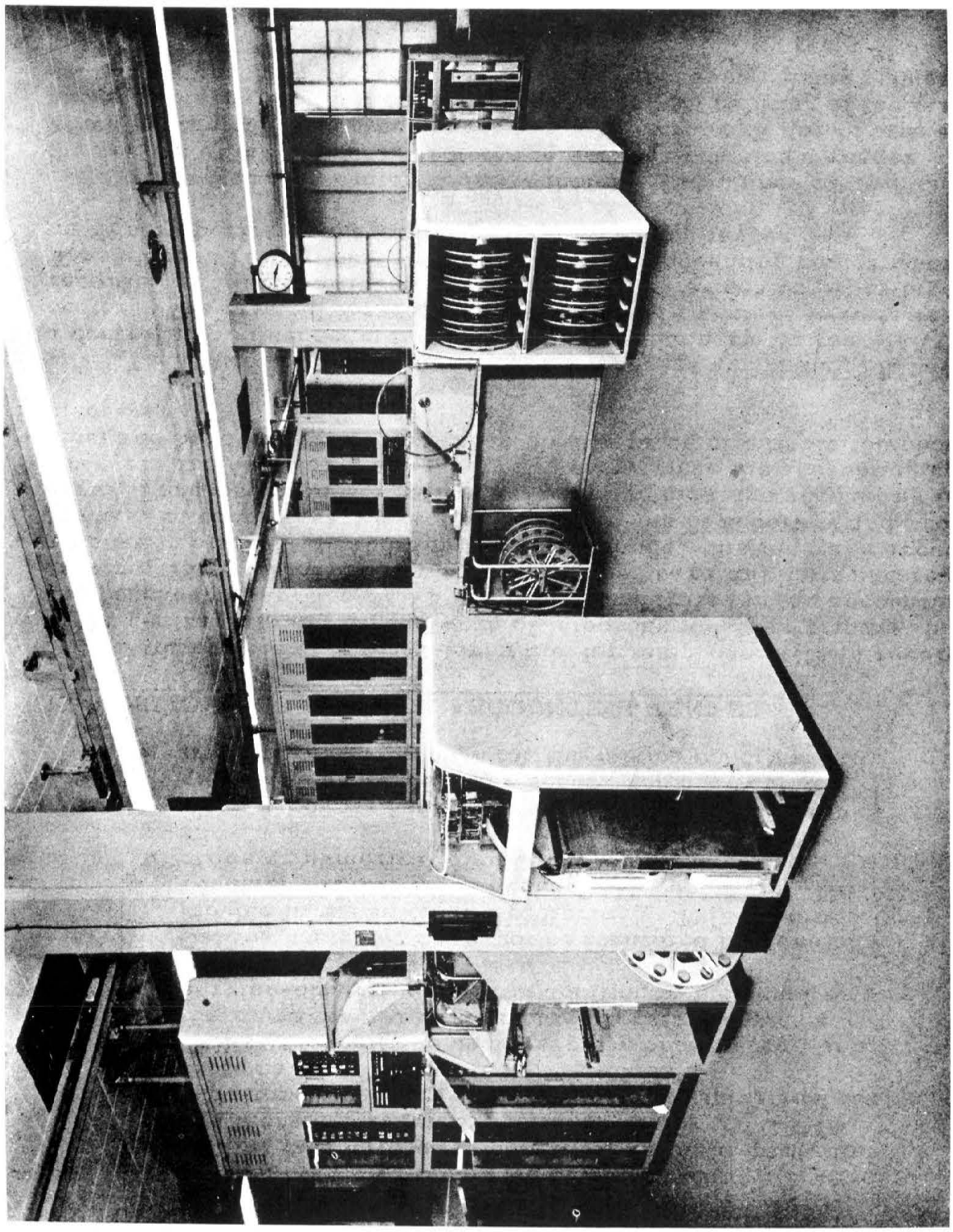

Figure 14-16 Accounting Center

TCI Library: www.telephonecollectors.info

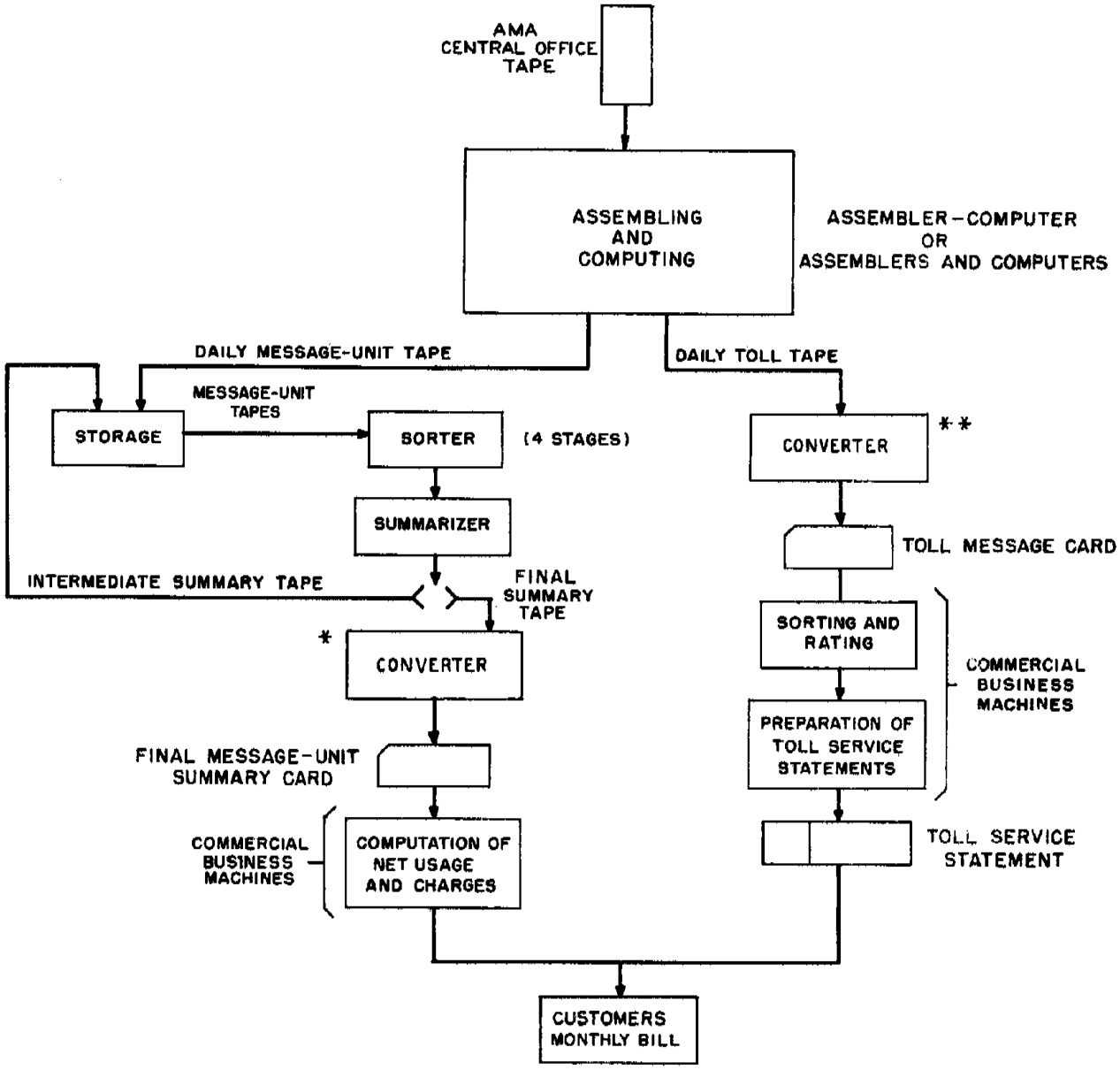

NOTES:

* THE AMA PRINTER-COMPARER-SCANNER OR PRINTER IS USED TO PRINT INTERMEDIATE MESSAGE UNIT SUMMARIES AND MAY ALSO BE USED TO PRINT FINAL MESSAGE UNIT SUMMARIES.

** THE AMA PRINTER MAY ALSO BE USED TO PROCESS DAILY TOLL TAPES, IN WHICH CASE THE OUTPUT IS IN THE FORM OF PRINTED TOLL SLIPS.

Figure 14-17 Processing of Central Office Tapes

TCI Library: www.telephonecollectors.info

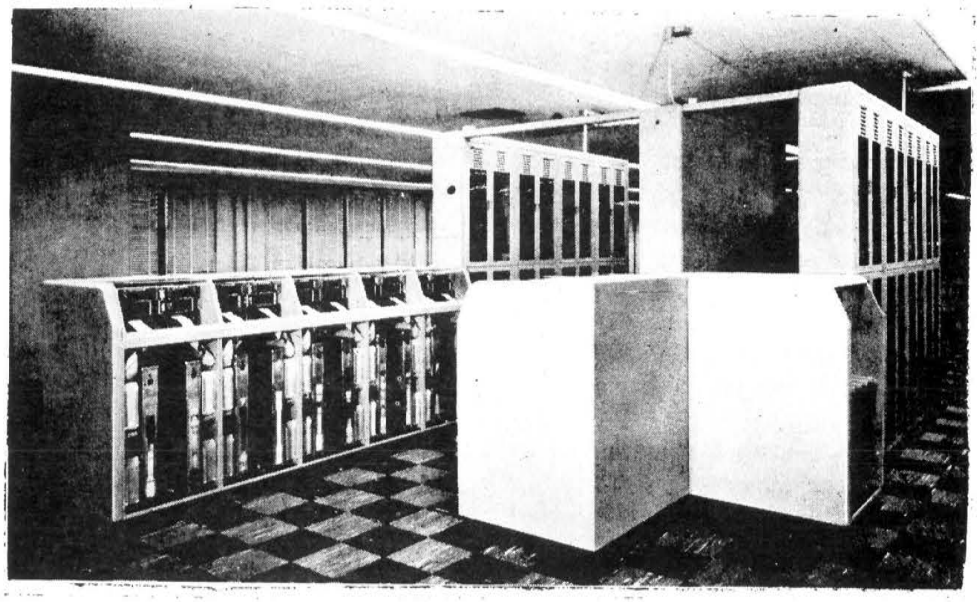

Figure 14-18 Assembler-Computer

In one assembler-computer stage or a combination of two assembler stages and one computer stage, the initial, answer, and disconnect entries of each call are brought together. Unanswered calls are eliminated and the chargeable time of completed messages is computed. For message unit messages, the chargeable time is converted to message units. Chargeable time for each toll message is derived and the complete call record is preserved. Message unit messages are separated from the toll messages during the assembler-computer or computer processing. In the four sorter stages, all the message unit messages dialed by a customer during a processing round are brought together on the output tape in line number order. In the summarizer stage, the message units of a processing round for each customer are totaled and added to the summary tape record of the previous round, except for the first processing round of the billing month.

Intermediate message unit summary tapes from the AMA summarizer are printed by the AMA printer-comparer-scanner, Figure 14-19, or the AMA printer to permit ready access to an individual customer usage to date, should a need for it arise.

TCI Library: www.telephonecollectors.info

Final message unit summary tapes from the AMA summarizer are fed to the converter, Figure 14-20, which provides a single punched card for each summary entry.

Toll output tapes from the AMA assembler-computer or the AMA computer are fed to the converter which produces a card containing the complete record of each toll message.

14.7 AMA FOR NO. 1 ESS

A. GENERAL

Taking full advantage of the data processing capabilities of No. 1 ESS, Bell Laboratories has programmed the AMA operation for the electronic system. The only special central-office equipment required for the ESS-AMA function is a magnetic tape unit. Besides holding considerable data the tape is stored and transported easily and it is compatible with the electronic computers already in service at most Bell System accounting centers.

In No. 1 and No. 5 Crossbar switching offices, AMA systems require control equipment and added features in trunk circuits in order to record call data as perforations on paper tape. Since there is no memory associated with the tape perforating equipment, all the data for each call cannot be punched together in sequence on the tape. Separate tape reading and computing equipment is required at accounting centers for sorting and assembling, as well as computing the charges for each call.

The AMA system in the No. 1 ESS is simpler in its operation. All its actions are contained in two programs, a data accumulating program and a data transfer program. The first records the charge details of all calls classified as billable, then encodes the data and transfers it to a memory buffer block. When this buffer block is full, the second AMA control program takes over and transfers the buffer block data to the AMA magnetic tape. All the while, the transfer program continually checks the tape unit and data-transfer circuitry for errors. The final output of both programs is a reel of magnetic tape containing all billing entries for a specific period of time.

TCI Library: www.telephonecollectors.info

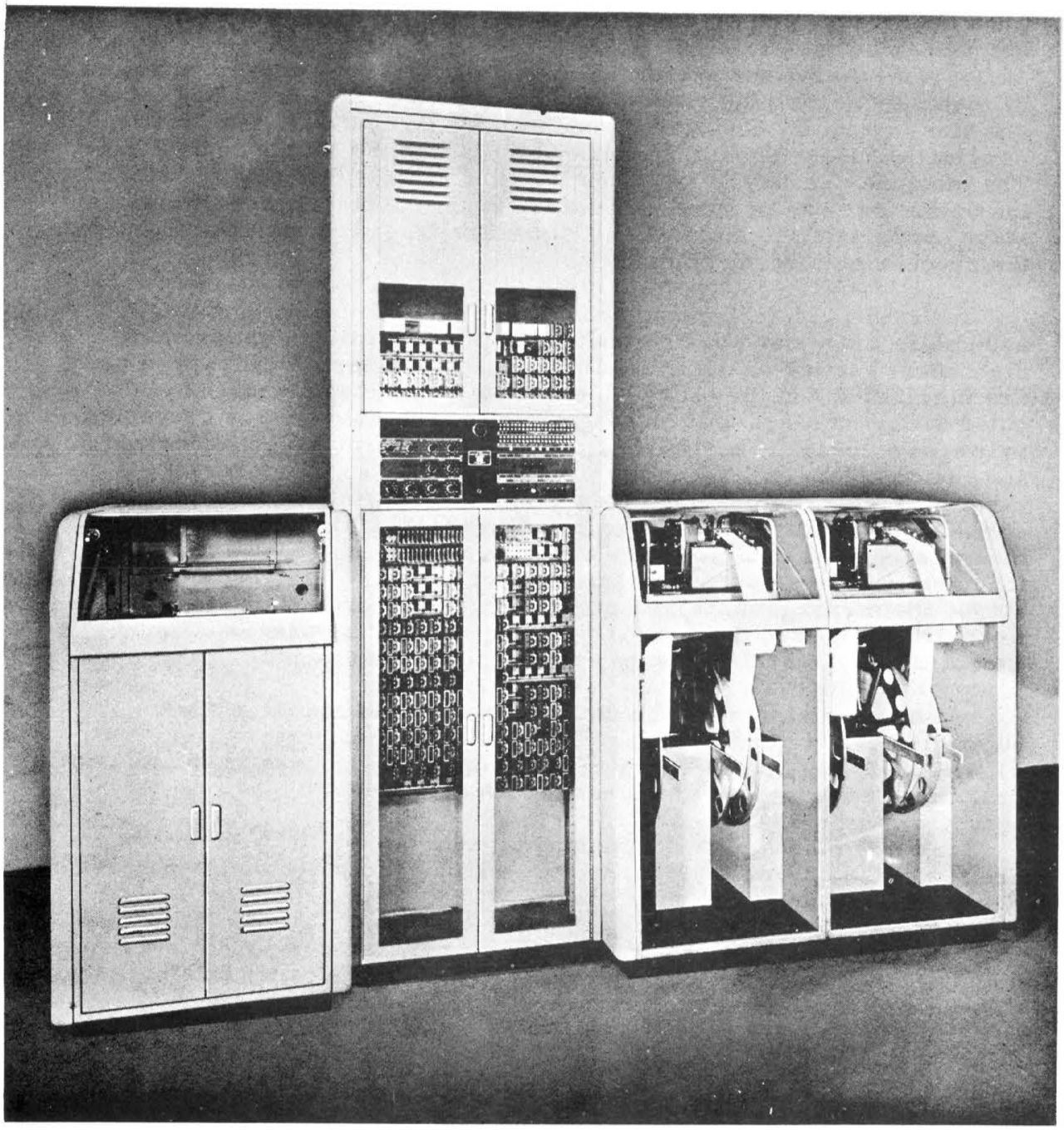

Figure 14-19 Printer-Comparer-Scanner

TCI Library: www.telephonecollectors.info

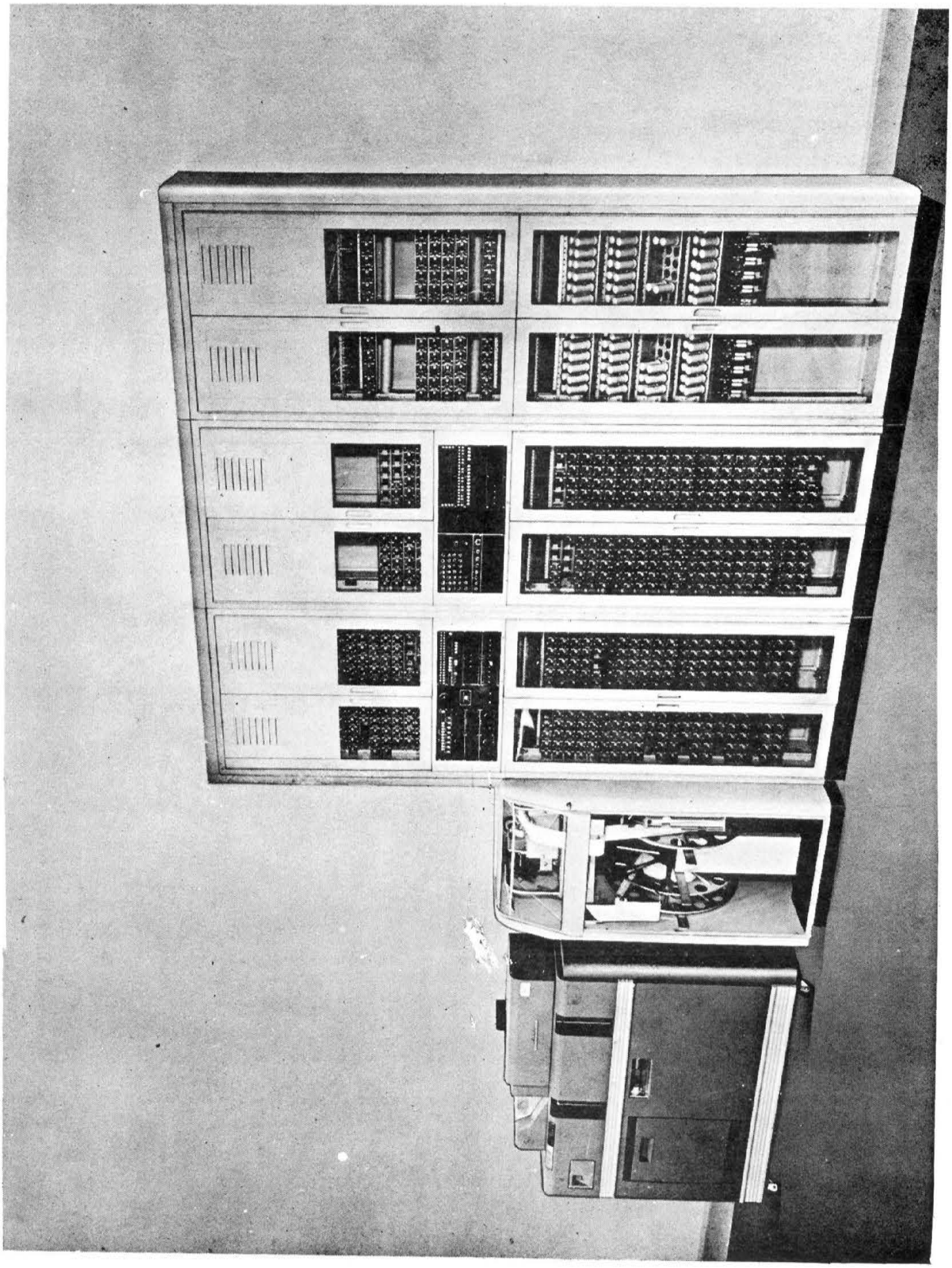

Figure 14-20 Tape-to-Card Converter

TCI Library: www.telephonecollectors.info

B. TYPICAL OPERATION

1. Data Accumulation

When a customer wishes to make a call, see Figure 14-21, his line is connected to a digit receiver which is associated with a block of temporary memory called the originating register. This register, which temporarily stores the customer's dialed digits and the control information for processing the call, performs basically the same function as the originating register circuit in the No. 5 Crossbar system.

As each digit is received, a report is made to the digit analysis program which controls the originating register. After three digits have been received, the digit analysis program requests a translation of these digits to determine a routing for the call. At this time the telephone customer has dialed either an office code, an area code, or a service code. The dialed office code may or may not be within the local calling area. If the call is not an intraoffice call, the requested translation includes routing information and an indication of whether or not the call is to be billed. If the call is billable, the digit analysis program then requests that an AMA register be linked to the originating register.

The AMA register is thus one of the key parts of the entire ESS-AMA system. This register is actually a block of temporary memory that accumulates pertinent data on the call as it progresses. It usually remains associated with the call for its entire duration. It contains 13 call store words, each with 23 information bits. The first four words comprise a standard format for all No. 1 ESS call registers and are used primarily for administering the register. The next three words store information about the network path used for the call connection. The remaining six words store the necessary charging information as it becomes available. (See Figure 14-22 for a typical call store register layout.) The number of AMA registers in any one ESS switching system depends on such factors

TCI Library: www.telephonecollectors.info

as the type and volume of traffic. There are always sufficient registers to insure an extremely low probability of a blocked call because of an unavailable register.

When the customer has completed dialing, the digit analysis program transfers initial call data from its own originating register to the linked AMA register. This initial entry includes such items as called and calling number, type of call, and a message billing index. After the transfer, programs route the call to an outgoing trunk. The originating register is then released and the AMA program assumes control. All changes of state detected by supervisory scan programs will then be reported to the AMA program.

The first report received will indicate either that the calling line has abandoned the call or that the called number has answered. For an answer report, the AMA program takes the time of day from the system clock and records it in the answer slot of the AMA register. The system clock, another temporary memory location, offers an accurate time base that is updated every 10 milliseconds. Times entered in the AMA register are in units of hours, minutes, seconds, and tenths of seconds. This timing accuracy suits the ESS-AMA charge details for such calls as DATA-PHONE, which formerly required their own high-accuracy timing devices.

When the calling or called party terminates the call, a supervisory scan program detects the change and reports to the AMA data accumulation program. The disconnect time is entered in the AMA register, and programs take down the network connections, restoring the trunk and line circuits to idle condition. All information needed for determining charges on the call now exists in the AMA register. This data must be transferred to the magnetic tape.

Because billing data in the AMA register are in a compact code not acceptable at the accounting center, they must be converted to standard form. A series of output data formats offering high efficiency and flexibility is avaialble for this conversion. Each type of call gets a

TCI Library: www.telephonecollectors.info

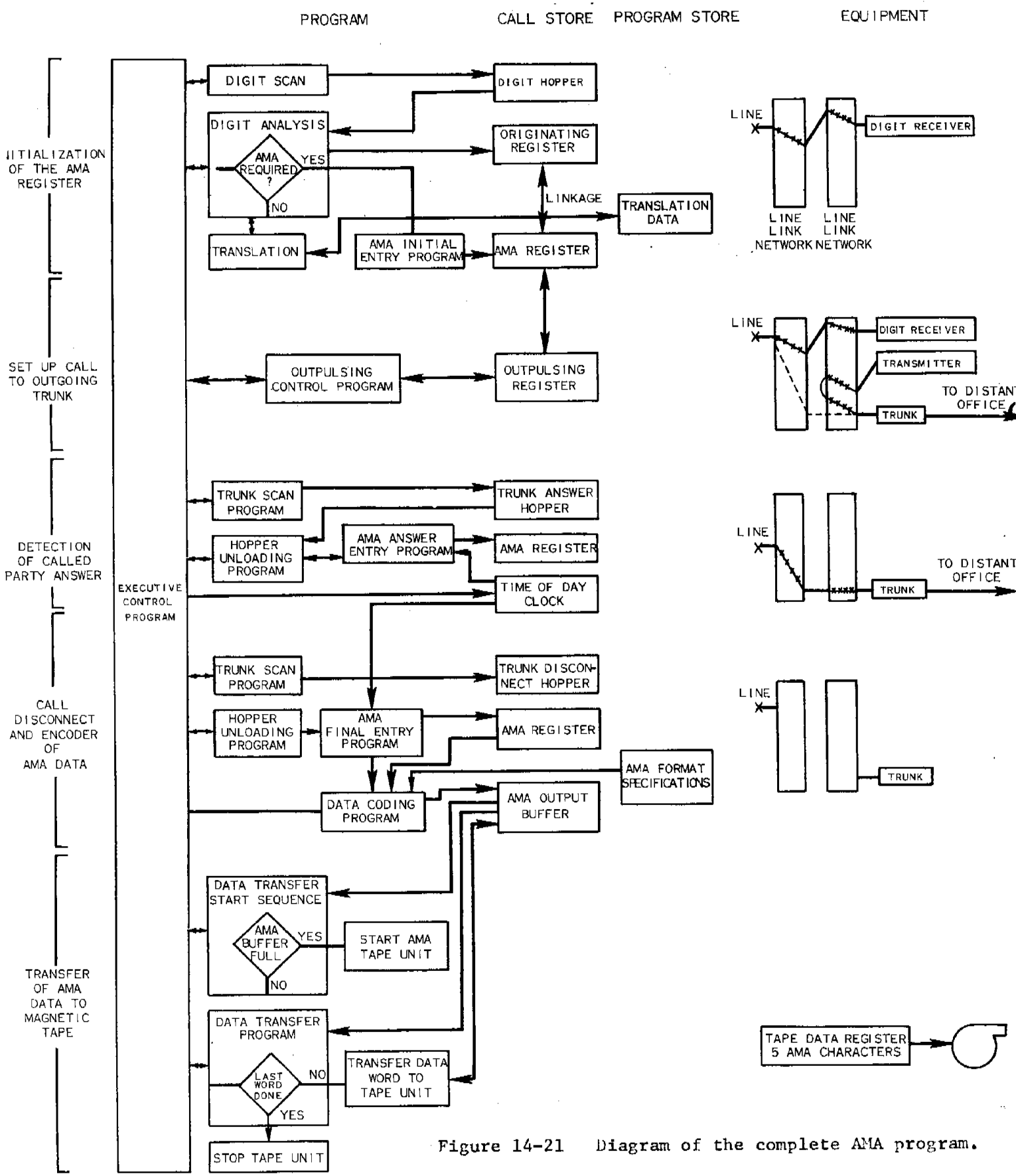

Figure 14-21 Diagram of the complete AMA program.

TCI Library: www.telephonecollectors.info

distinct format consisting of series of binary coded decimal (BCD) four-bit characters arranged in a fixed sequence for identification by the processing computer at the accounting center.

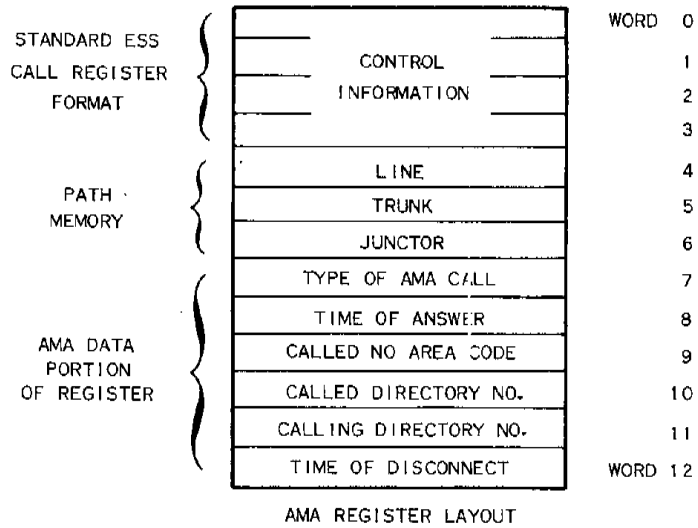

Figure 14-22 Simplified layout of an AMA call store register.

Three information digits directly precede the data for each call recorded on the AMA tape. Table 14-1 shows a typical format. The first digit informs the accounting center that this is the start of a new entry. The next two digits identify the data format. At present, the No. 1 ESS system has formats for 21 types of chargeable calls, ranging from station-to-station calls to custom calling services such as dial conference. New formats can be added and old ones deleted as the requirements for billing information change.

Since calls are completed randomly in time, it would be neither feasible nor economical to copy the data of each call onto the magnetic tape as soon as that data has been encoded in the proper format. There must be sufficient data to warrant starting the tape unit. A block of

TCI Library: www.telephonecollectors.info

buffer memory, therefore, temporarily stores the data until 500 BCD characters have been accumulated. In normal operation, this means information from 10 to 20 AMA registers, depending upon the data format used by each.

After the data in the AMA register have been encoded and stored in the buffer memory, the register is released for assignment to a new chargeable call. If the buffer area is full at the time an AMA call is completed, special facilities keep the AMA register in a waiting list until the AMA data transfer programs transfer data from the buffer to the tape. This prevents loss of charging data because of overload conditions.

Table 14-1

Binary coded digits (BCD) used to convert data from the AMA register to a standard billing format.

NAME	NO. OF BCD CHARACTERS REQUIRED
START OF ENTRY CODE	1
TYPE OF ENTRY = STATION PAID REGULAR = 01	2
SPECIAL ACCOUNTING INFORMATION	3
CUSTOM CALLING SERVICE USED	2
CONNECT TIME	7
CALLING NUMBER	7
MIDNIGHT INDICATOR	1
DISCONNECT TIME	7
CALLED NUMBER	10
TOTAL	40

TCI Library: www.telephonecollectors.info

2. Data Transfer

When the base-level executive-control program finds the AMA buffer full (it periodically checks the states of the buffer) program control passes to the second major AMA program--the data transfer program. This program has two basic parts. The first, operated at base level, starts the tape drive unit and prepares it for recording. While the tape unit is getting up to speed, this program checks that the basic hardware is satisfactory, that the tape unit motors are running, and that there is sufficient tape on the reel to record the data block. If these checks are affirmative, actual data transfer begins.

Actual data transfer is the primary function of the overall data transfer program. (See Figure 14-21.) In time, however, data transfer is controlled by the second part of the program. Because of the stringent timing requirements on data transfer circuitry, this operation occurs at the interrupt level. (See Figure 14-23.) The data transfer sequence is entered every five milliseconds until the entire buffer area is recorded on tape. At each entry, one 21-bit data word (five four-bit AMA characters plus a parity bit) is transmitted from the buffer to the tape unit circuitry. Special circuitry divides the work into five characters, computes an odd parity bit for each character, and records it on the magnetic tape.

The tape unit has seven tracks, uses four for the BCD character and one for the parity bit. The remaining two are presently unused. It takes about one millisecond to record each character, and after five milliseconds, the tape unit is ready for another word from the central control unit. If the system fails to transmit a data word to the tape unit in time, tape-unit circuitry recognizes this and records a dummy character on the tape. The AMA accounting center ignores these characters when processing the tape. Dummy characters are necessary because adjacent blocks of data on the tape are normally separated by blank sections. Since the central control unit processes all data in a real-time

TCI Library: www.telephonecollectors.info

mode, there occasionally may be enough I/O activity at higher priority than AMA to cause central control to miss a five millisecond time spot.

When all 500 AMA characters are recorded on the magnetic tape, the recorder stops. The entire sequence of starting the tape unit, recording the data block, and stopping the tape takes about one second and uses about 3.5 inches of tape.

Major goals of the AMA design in No. 1 ESS were long-term reliability and high accuracy in the recording of customer billing data. These dictated the use of a simple, rugged tape recorder. Duplication of hardware, including recorders and access and control circuitry, further insures system reliability. One tape unit records while the other stands by. In normal operation, the tape units interchange from active to standby once each day, usually at midnight. This enables craftsmen to remove the tape containing each day's information.

For greater dependability, the data transfer program continually monitors the tape unit for malfunctions during data transfer. Trouble indications include improper tape speed, broken tape, bad parity words from the central-control unit, and bad parity from the tape itself. If any malfunction is detected, the faulty unit is switched out of service and the standby unit activated. Diagnostic programs then test the faulty unit, usually locating the trouble within a matter of seconds. The results are quickly reported on the maintenance teletypewriter.

Automatic message accounting in No. 1 ESS, by taking advantage of stored programs and using magnetic tape recorders, has evolved into an efficient, reliable, and economical system. It can record the charge details of about 40,000 calls an hour. The tape reel has enough storage capacity for about 100,000 entries.

TCI Library: www.telephonecollectors.info

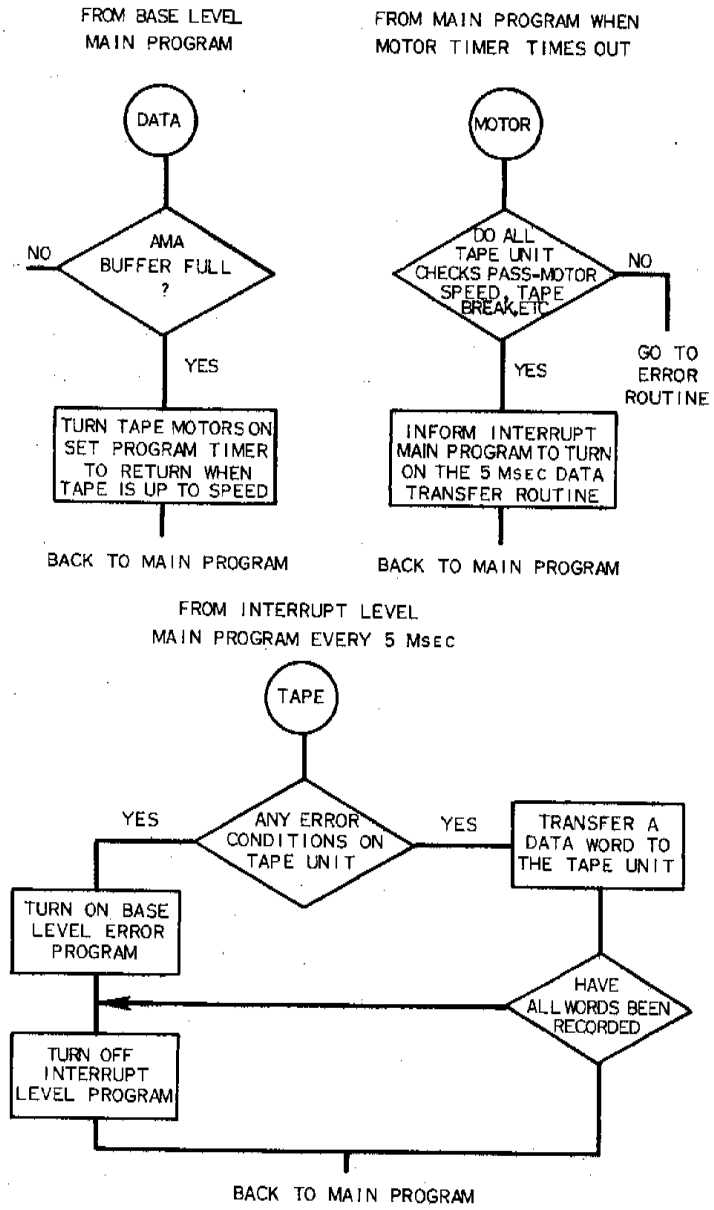

Figure 14-23 The AMA Data Transfer Program.

TCI Library: www.telephonecollectors.info

CHAPTER 15

OUTSIDE PLANT FACILITIES

15.1 INTRODUCTION

The outside plant of a Telephone Company comprises, in general, all of the telephone facilities and supporting structures found between the main frame at the telephone central office and the station protector at subscribers' premises; it includes exchange and toll pole lines, both cable and open wire, and exchange and toll underground and buried cable systems.

The purpose of the outside plant is to furnish the physical paths over which communication signals are propagated. The outside plant problem in general is to fulfill the purpose of providing these physical paths in such a way as to satisfy the requirements of:

1. Safety to the public, the subscribers, and the Company's property.

2. To provide satisfactory paths from the standpoint of the subscribers.

3. It must be reliable under all conditions.

4. It must be flexible enough to meet the changing demands of the population growth and distribution.

5. Last, but by no means least, the arrangements should be such as to meet all of the above requirements in an optimum manner and at minimum cost.

In order to help realize the full importance of the outside plant, it should be noted that the total investment in the outside plant amounts to approximately 1/3 of the total worth of the Bell System. Another point of interest is that there are over 200 million conductor miles of exchange cable and over 35 million conductor miles of toll cable. Thus the total conductor mileage is more than triple the distance to the sun.

TCI Library: www.telephonecollectors.info

15.2 TOLL AND LOCAL FACILITIES

A distinction should be made between the facilities used for toll calls as compared with those used for local calls. This is necessary, even though every toll call requires the use of local facilities.

The local facilities include the greater part of the total telephone plant since local or short haul service is naturally used more frequently than long distance service. Accordingly, it is economically desirable to design these facilities primarily on the basis of providing satisfactory transmission within the exchange area. On longer local calls involving repeaters the same considerations described below would also apply to local facilities.

For toll or long distance connections, of which local facilities necessarily form a part in every case, more costly types of facilities are used for the long distance links in order that the transmission be satisfactory. This arrangement is in the interest of overall economy because the long distance facilities are relatively few as compared with the local facilities. It means in general that the latter facilities do not have to meet as exacting requirements as do the toll facilities with respect to attenuation per unit length, impedance regularity, or balance against noise and crosstalk. In exchange area cables, for example, wire conductors as fine as 22, 24, or 26-guage are widely used, whereas the minimum gauge in long toll cables is 19, or coaxial cable is used. Also, to keep crosstalk and noise within practical limits, quadded construction is used on the longer circuits. Generally, similar distinctions apply as between exchange and toll cables in the case of transmission over open wire. However, it may be noted that there is a certain middle ground where local trunks are of such lengths, or the service of such a type, that the transmission characteristics may approach those of the shorter toll circuits.

The development of the telephone art has involved the use of many types of facilities in the past. Changes will continue to be made as new methods come into use. At any given time the working plant will consist of facilities ranging from types on the verge of obsolescence to newly developed types barely out of the development stage.

TCI Library: www.telephonecollectors.info

15.3 TERMINOLOGY OF COMPONENT SECTIONS

As mentioned earlier, the outside plant originates at the main frame in the central office and terminates at the station protector on the subscribers' premises. If we were to follow the pair for a typical subscriber from the central office to his telephone set, something similar to that presented in Figure 15-1 would be seen.

First of all, on leaving the main frame a "tip" cable or 300 connector with stub is found. This tip cable is spliced to the underground cable in the cable vault. The cable vault is generally located directly beneath the main frame. The underground cable is installed in conduit and generally serves densely populated routes in urban areas. At places where service requirements diminish, the underground cable may be spliced to aerial cable or perhaps buried cable. This aerial or buried cable divides and subdivides to serve the streets which intersect the cable run. Hence, the number of pairs in the cable diminishes with distance from the central office. Ultimately in suburban or rural areas a point may be reached beyond which the number of subscribers to be served is too small to justify continuation of cable, and open wire, B urban, B rural or some other form of line wire is used for further extension circuits.

There is an established nomenclature concerning the cable portions of the telephone circuits. If the cable on leaving the central office progresses for a considerable distance without dropping off circuits for subscribers, it is called a main feeder cable, or if a branch cable so extends it is called a branch feeder cable. In general, a feeder cable is an exchange cable containing a preponderance of pairs which are not terminated for service connection. Conversely, a distribution cable is one containing a preponderance of pairs which are terminated for service connectors along its length. At various poles along the cable route, selected pairs are made accessible in distribution terminals. A distribution terminal will be located near the subscriber's home. From the distribution terminal, a drop wire is used to reach the subscriber's home. The drop wire terminates on a station protector. This station protector consists of carbon block lightning arresters and in some cases, fuses which are designed to operate before the carbon blocks overheat on sustained discharges. From the station protector, inside wire leads to the telephone set. In congested areas, distribution to the subscribers may be made from a small branch cable, suspended by poles along an easement behind subscribers'

TCI Library: www.telephonecollectors.info

homes, or attached to building walls. Such a cable, located within the confines of a municipal block, is called block cable. The wires leading from terminals of block cable are frequently supported in rings attached to building walls and need possess no strength for their own suspension. This type of wire is called block wire.

Where apartment houses are served, it is often desirable to run a branch cable into the building and terminate it in an inside distribution terminal. House cable leads from this terminal to small terminals on the various floors and then inside wire connects the individual telephone sets.

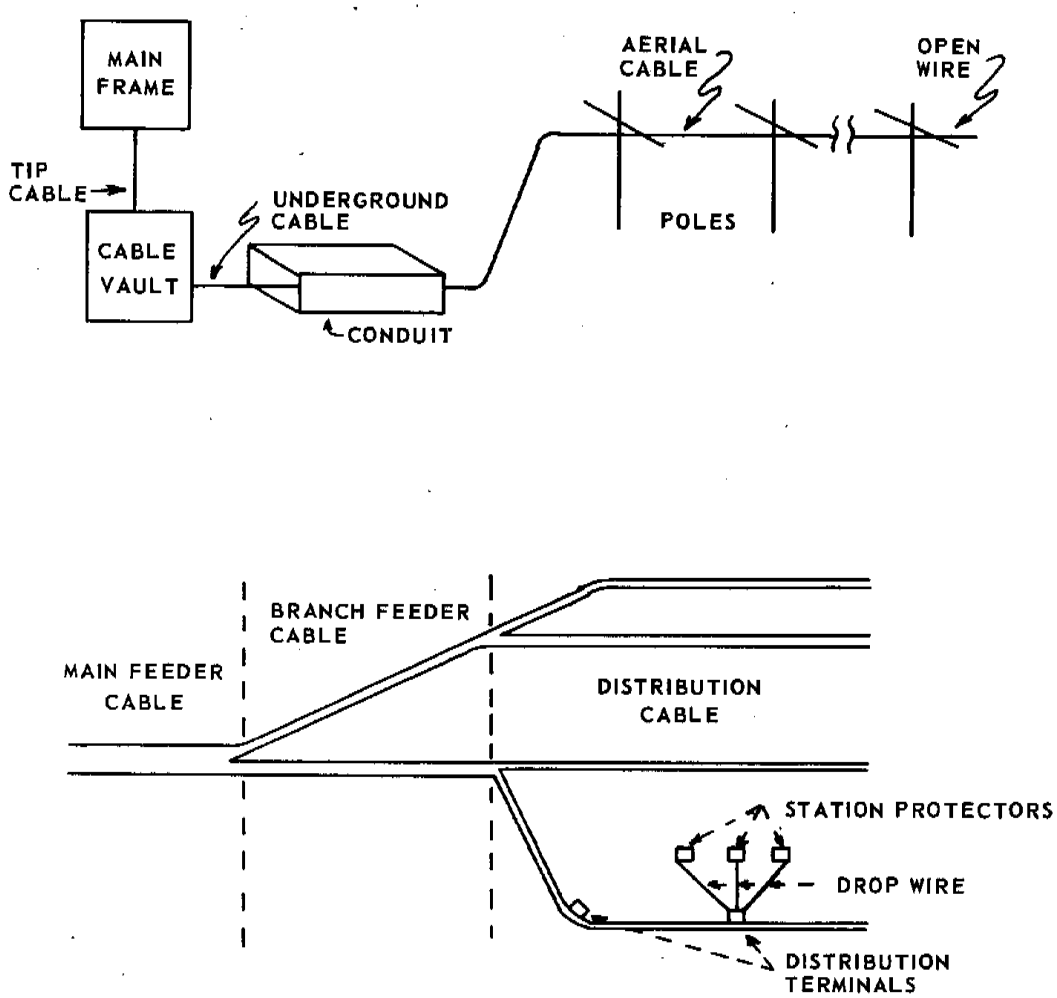

Figure 15-1 - Typical Cable Run - Central Office To Subscribers

TCI Library: www.telephonecollectors.info

15.4 CROSSTALK

Crosstalk is a term widely used to mean unwanted coupling from one signal path onto another. Crosstalk may be due to direct inductive or capacitive coupling between conductors. When coupling paths give rise to intelligible (or nearly intelligible) interference, it is necessary to design the cable, open-wire line, antenna, repeater, or modulator so that the probability that a customer will hear a "foreign" conversation will be less than a prescribed value. In normal practice, a 1 per cent chance of having intelligible crosstalk is considered tolerable.

The effect of the magnetic field of one circuit on a second paralleling circuit is called magnetic induction. The effect of the electric field is called electric or electrostatic induction. Figure 15-2 shows how magnetic induction causes "crosstalk." At some particular instant in the alternating cycle, the current in wires 1 and 2 may be represended by I_a - equal and opposite vectors. As I_a increases or decreases in value, the magnetic lines of force will cut lines 3 and 4. With the relative spacing of the wires shown, more lines will cut wire 3 than wire 4. Therefore, the voltage induced by the magnetic field in wire 3 will be somewhat greater than that induced in wire 4. The voltages induced in both wires are in the same direction at any given instant, so that they tend to make currents circulate in circuit B in opposite directions. If they were equal, their net effect would be zero, however, since the voltage e_3 exceeds e_4, there is an unbalance voltage, $e_3 - e_4$, tending to make a current circulate in circuit B. It should be noted that although the current in circuit A is considered as being transmitted in one direction, the crosstalk current in circuit B appears in both ends of the circuit. The crosstalk at the left (toward the talker) is known as near-end crosstalk and that appearing at the right (toward the listener) end is known as far-end crosstalk.

If two long paralleling telephone circuits are not "balanced" against each other by some means or other, the crosstalk will seriously interfere with their practical use. The magnitude of crosstalk tends to increase with:

1. The length of the line

TCI Library: www.telephonecollectors.info

2. The energy level of transmitted currents

3. The frequency of the transmitted currents

Therefore, the use of telephone repeaters and carrier systems tends to increase the crosstalk level.

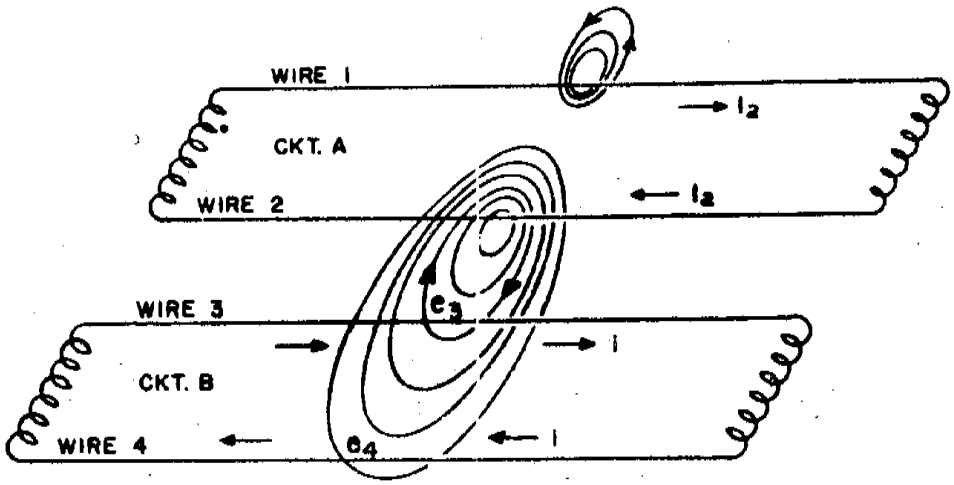

Figure 15-2 - Crosstalk On Transmission Line

There are several possible ways to eliminate, or at least substantially reduce, crosstalk induction. In an effort to keep the crosstalk in long toll circuits to a reasonable level, the effects of the basic design of long line circuits had to be taken into account. These design features will, in general, apply to both open wire and cable alike. One very important feature is the effect of the location of repeaters on crosstalk. Repeaters should be placed (i.e. spaced) on a line so that adjacent lines do not have such differences in energy level that crosstalk occurs. Methods of minimizing crosstalk will be discussed in the individual sections devoted to the various cable facilities.

15.5 OPEN WIRE

One of the first facilities to be used for the transmission of telephone signals was open wire pairs. This facility is still used today to reach outlying subscribers in rural districts and short haul toll lines containing only a few circuits.

TCI Library: www.telephonecollectors.info

Well before the turn of the century, the number of telephone circuits in large cities had increased to the point where open wire lines were becoming space consuming and difficult to maintain. This may be evidenced by observing a scene of Broadway in 1890 presented in Figure 15-3.

This mass of wiring had several objectional features. They were unsightly, had a high maintenance cost and very liable to storms and accidents. If the telephone plant was to be somewhere other than in the air and still be out of the public streets the only answer was to place it underground. By way of contrast, Figure 15-4 presents a picture of Broadway in 1920 after the move to underground plant was accomplished.

Figure 15-3

TCI Library: www.telephonecollectors.info

Figure 15-4

Open wire can be obtained in different sizes varying from 80 mils to 165 mils and is constructed of any of these three materials: (1) copper, (2) a combination of copper and steel, or (3) galvanized steel. A zinc coating is applied to the open wire to provide corrosion resistance.

In general, signaling limitations and transmission loss govern the choice of the conductor material. Steel wire is preferred for rural districts, provided it meets the transmission requirements, because its high strength permits economical long span construction. The spacing between wires for open wire exchange circuits is generally 10 to 12 inches. The larger spacing would generally be used with long spans to reduce the possibility of contact between the wires. When open wire lines encounter trees, leakage problems may result, especially during wet weather. Originally the only recourse was tree trimming. More recently an insulated wire is used when passing through trees. One such facility is called "tree wire." This wire employs a copper-steel conductor covered with rubber insulation followed by a heavy jacket of neoprene.

TCI Library: www.telephonecollectors.info

Before the development of the telephone repeater, the majority of long distance facilities were open wire and, to keep attenuation at a minimum, practically all open wire was loaded with relatively high inductance coils spaced at intervals of about 8 miles. Almost all of the conductors used were 165, 128 or 100 hard drawn copper wire, and each group of four wires was usually arranged to carry a phantom circuit. A phantom circuit uses repeating coils to obtain three circuits over two separate wire circuits by subjecting the third circuit on center taps of the coils of the two separate wire circuits.

The wires were carried on "ten pin" cross arms, with ten wires on each arm. These were numbered consecutively, starting at the left in the manner indicated in Figure 15-5.

The standard wire layout on the two cross arms shown in Figure 15-5 provides for ten "side" and five "phantom" circuits. Phantoms are derived from wires 1-4; 7-10; 11-14; 17-20; and 5-6, 15-16. The last is called the "pole pair" phantom. It has somewhat different electrical characteristics from the other phantoms because of different spacing and configuration of the wires. Similarly, the characteristics of the "nonpole pair" side circuits such as 1-2 or 9-10 (with 12 inch spacing between wires) are slightly different from those of the pole-pair circuits, 15-16, which are 16 inches apart. Many open wire lines of this type are still in use today in the long distance plant. Loading, however, has been generally discontinued because attenuation characteristics of open wire circuits change (particularly leakage) with varying weather conditions. For example, in dry weather, loading effectively reduces attenuation; but in wet weather, loading may actually increase the attenuation. Accordingly, to increase the overall transmission stability of such circuits, all loading was removed after the telephone repeater came into general use.

In the case of open wire lines, crosstalk reduction depends upon three main factors, namely: wire configuration on the poles, transpositions, and resistance balance. Resistance balance is primarily a question of maintenance and ordinarily presents little difficulty. The use of high-frequency carrier systems such as C, H, J or O, with their much greater crosstalk possibilities, had led to the development of configurations of open wire line in which the spacing of the individual conductors in a pair is closer together and the pairs are spaced further apart. This is illustrated in Figure 15-6 for one carrier system.

TCI Library: www.telephonecollectors.info

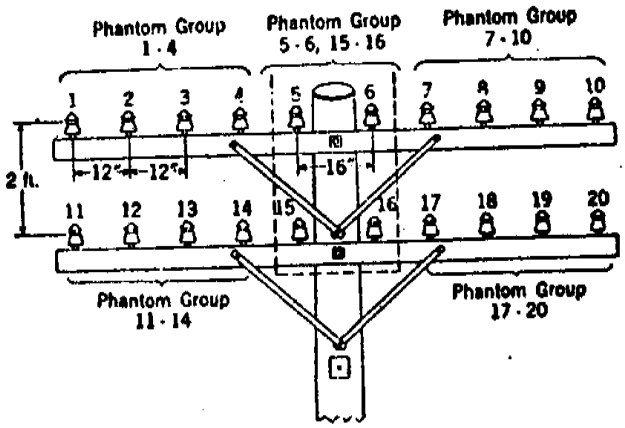

Figure 15-5 - Wire Configuration For Open Wire Line (Side and Phantom Circuits)

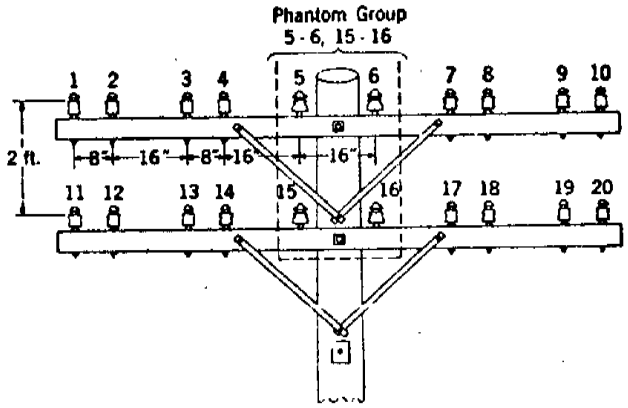

Figure 15-6 - Wire Configuration For Open Wire Line (Type-C Carrier Systems Superimposed)

This figure displays the arrangement which is generally used for "C" type carrier telephone systems (frequency up to 30 KH_z) in which the nonpole pairs have 8 inch spacing between wires and the separation between the nearest wires of the adjacent pairs is 16 inches. This configuration, which is designated 8-16-8, includes a pole-pair phantom group which is generally used for voice frequencies only. The change in spacing from 12 inches to 8 inches reduces the linear inductance of the

TCI Library: www.telephonecollectors.info

pair and increases its linear capacitance by about 8%. The resistance and leakage remain the same and the attenuation is slightly increased. The characteristic impedance is reduced by about 50 ohms. Open wire facilities are subject to effects of leakage. This increases attenuation losses, particularly at carrier frequencies, and it must be adequately controlled to obtain satisfactory transmission.

There are two standard ways of placing transpositions along a pole line. They are most commonly known as the "point type" and the "drop-bracket", or "J-bracket", transpositions. Both types of transpositions are shown in Figures 15-7 and 15-8 respectively.

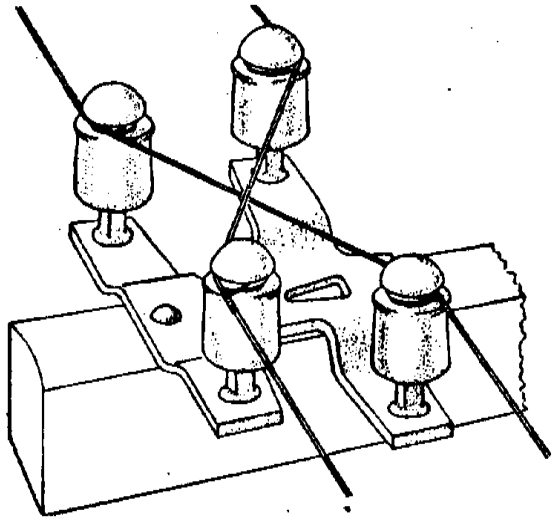

Figure 15-7 - Point-Type Transposition

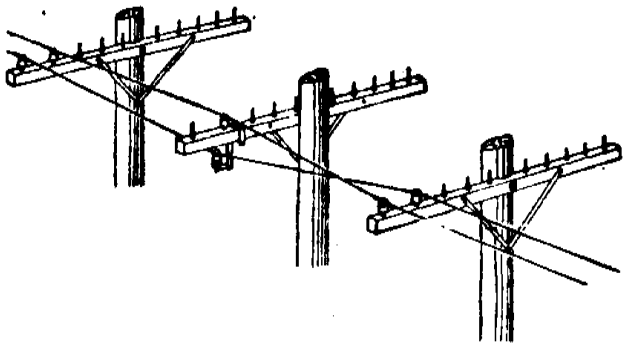

Figure 15-8 - Drop-Bracket Transposition

TCI Library: www.telephonecollectors.info

15.6 TOLL ENTRANCE CABLE

It is seldom practicable to bring open wire lines into the center of larger towns and cities; instead, the open wires are terminated at a pole on the outskirts of the city. These terminating cables are called "toll entrance cables." They vary in length from a few hundred feet to several miles. Many times intermediate cables are inserted in long open wire lines for river, rail or highway crossings. To meet the overall transmission requirements of long distance circuits, it is desirable to keep the attenuation of toll entrance and intermediate cable to a minimum. It is most important that the cable conductors be designed so that their impedance will closely match the impedance of the open wire to which they are connected. Loading of the proper inductance and spacing is used to obtain both low attenuation and impedance matching. The cables usually contain two guages of wire - that is 16 and 19 (previously 13 gauge was also used), - the larger gauge wires are connected to the larger gauges of open wire.

In certain instances the open wire carries frequencies which are so high that it is not desirable to load the entrance or intermediate cable at all. The resulting high attenuation is overcome by the application of high gain repeaters. However, in other cases, particularly in intermediate cables, a special type of conductor is used to handle these high frequencies. This consists of cable made up of individually shielded, 16 gauge, disc-insulated "spiral four" quads. Each such quad consists of four wires placed at the corners of a square, the two wires at the diagonals of the square forming a pair. These disc-insulated quads may also be loaded to improve still further their attenuation characteristics. However, this type of cable is used only in very small amounts and at infrequent intervals.

15.7 CABLE FACILITIES

Because of the rapid growth of telephony, the urban centers of our population soon became congested with a mass of overhead telephone wiring. Since the available space underground was limited it would be necessary to group the pairs much closer than was done with open wire, and the pairs would have to be protected from the moisture encountered underground.

Cable is comprised of two main segments; the cable core and the cable sheath. The core consists of the individually insulated conductors and the sheath is the outer shell which protects the conductors.

TCI Library: www.telephonecollectors.info

In first looking at the cable core, it is found that the individual pairs were twisted together for flexibility. The pairs are then stranded helically in concentric layers around a central pair or group of pairs. Thus, if we followed an individual wire we would find it following two helices; one around its mate in the pair and one around the other pairs in the cable. In the construction of the core it was mentioned that the pairs were twisted and stranded for flexibility. There is, however, another reason for the twisting. The pairs in a cable are much closer together than those in open wire lines, and the crosstalk problem is, therefore, more severe. By providing a number of different pair twist lengths the crosstalk problem is greatly reduced. This results from the fact that the signal induced in one pair from another varies continuously from adding in one direction to adding in the other, with the net pickup approaching zero.

Another element in circuit design in most of the longer voice frequency cable circuits and in all carrier circuits, is that the effect of near-end crosstalk is minimized by the use of separate paths for transmission in the two directions. In cable circuits, the pairs carrying the transmission in two directions are separated as much as possible by placing them in different layers in the cable; or, in the case of "K" carrier circuits in different cables. A similar separation is obtained in open wire carrier circuits by using different bands of frequencies for transmission in each direction.

At first conductors were insulated, to prevent physical contact between pairs, by wrapping them with strip paper. However instead of wrapping the paper on smoothly it was applied in such a way as to cause wrinkles in the paper. Thus a sort of tube of paper formed around the conductors with a good deal of air space between. The reason for allowing the paper to wrinkle is twofold: (1) for a given amount of paper the separation between conductors is greater than if the paper were wrapped smoothly thus reducing the likelihood of physical contacts between conductors and (2) air has a lower dielectric constant than paper and since attenuation is proportional to capacitance which is, in turn, proportional to the dielectric constant, we can reduce the attenuation by enclosing air gaps in the insulating material.

The next type of conductor insulation used was paper pulp. In this insulating process a tube of paper was formed around the conductor from a mixture of paper pulp and water, then the insulated wire was dried before the cable was formed.

TCI Library: www.telephonecollectors.info

Another effect of increasing demands was the introduction of mass production methods to cable manufacture. In order for mass production techniques to be effective, it was necessary to standardize cable sizes and conductor sizes.

Early in the development of cable, economic factors encouraged the use of cables of different attenuations for various conditions in the plant. For example, if a subscriber was located quite close to the central office we could provide him with adequate service with a cable pair having a much higher attenuation than we could if he was located at a considerable distance from the central office. In order that different cable lengths should match each other as well as their associated equipment it was necessary that the capacitance for cable be standardized. Two values were chosen; one for high grade transmission and another for local or exchange area transmission. These values are .062 and .083 mf/mile respectively. Since the capacitance has been fixed the only parameter left to vary the attenuation is the conductor gauge. In the exchange plant the four main gauges are 19, 22, 24 and 26. These gauges provide adequate increments of attenuation for various field conditions.

When cable was first used the sheath consisted of a lead or iron pipe and the cable core was pulled in by hand. By the turn of the century, however, methods were developed for extruding lead directly onto the cable core. The lead sheath held control of the field until the material shortages of World War II. This shortage led to the development of polyethylene as a sheath material. Polyethylene exposed to sunlight was subject to decomposition. Consequently, to shield the material from such effects, carbon back was dispersed in it to act as a light screen. It was also found that moisture would penetrate to the cable core in several years if it were immersed in water. To counteract this an overlapped aluminum tape was applied to the cable under the polyethylene. This structure is known as alpeth sheath. If still better protection against moisture is demanded, as in the case of paper or pulp insulated conductor, a soldered steel tube can be added between the aluminum and the polyethylene. This is called stalpeth sheath.

There are many other modifications to the basic types of sheath to protect the cable from such outside plant hazards as lightning, corrosion and abrasion. Various configurations and their designations are shown in Figure 15-9.

TCI Library: www.telephonecollectors.info

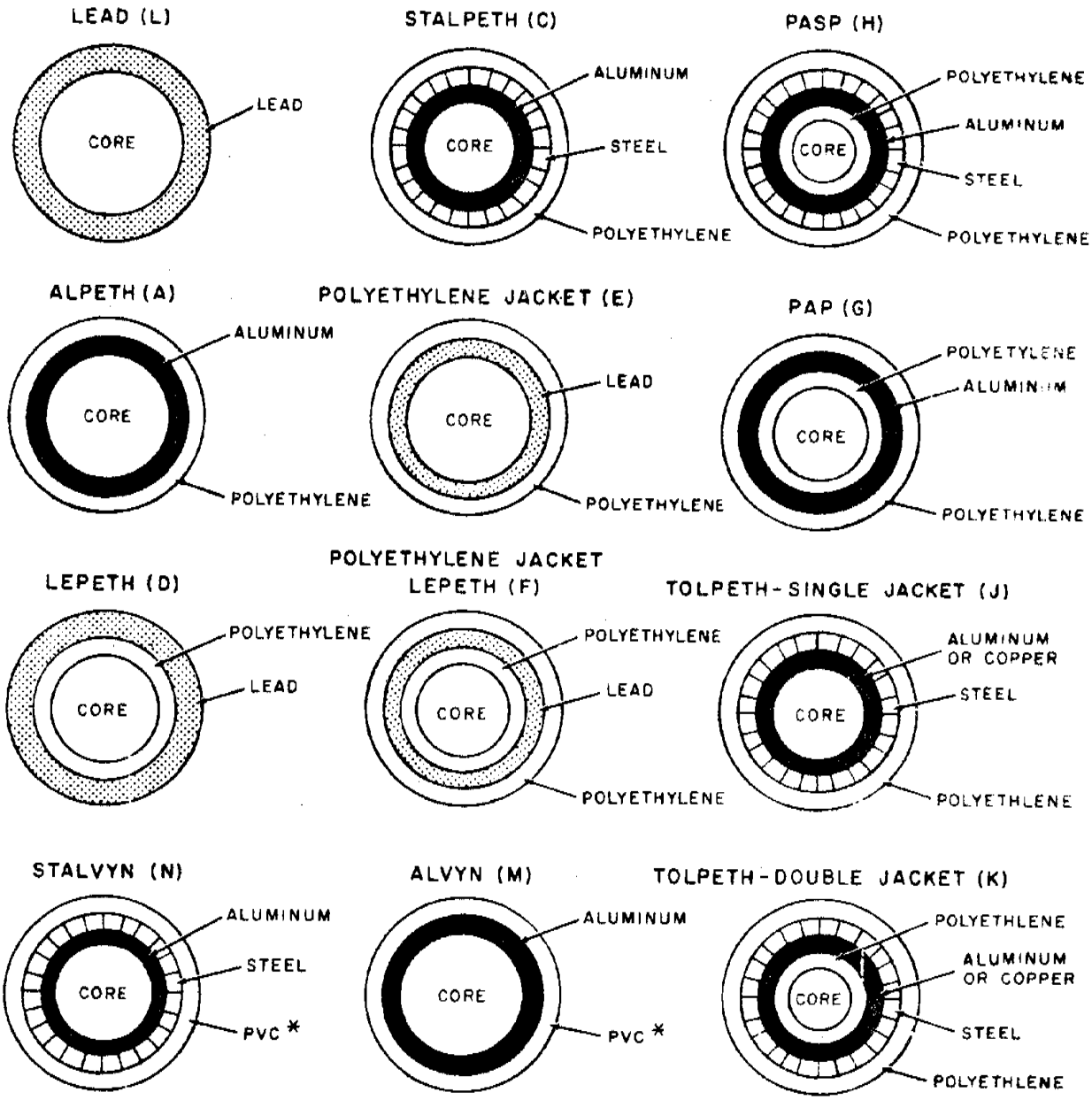

NOTE: FOR BREVITY THE SYMBOL SHOWN IN ( ) IS USED TO DESCRIBE THE DESIRED SHEATH AND IS ADDED TO THE CODE DESIGNATION AS A SUFFIX.

* POLYVINYL-CHLORIDE

Figure 15-9 - Available Types of Sheath Exchange and Toll Cable

TCI Library: www.telephonecollectors.info

The rapid success of polyethylene as a sheath material led to the investigation of polyethylene as a conductor insulation also. Polyethylene has two distinct advantages over paper or pulp insulation. It has a very low moisture absorption and it has very high dielectric breakdown properties. Because of its low rate of moisture absorption, sheath breaks do not require emergency maintenance as they do for paper insulated conductor cable. Cable terminals and splice closures could also be simplified if they were not required to be moisture tight. Because of the high dielectric break-down qualities, less protective measures had to be installed for lightning. The main shortcomings of polyethylene was its price and the fact that due to its higher dielectric constant a greater wall thickness was demanded to maintain the desired capacitance. The greater wall thickness added to the cost directly by requiring a greater amount of polyethylene and indirectly by increasing the core diameter thus requiring a larger sheath.

It is anticipated that these problems will be greatly reduced with the development of an expanded form of polyethylene. By mixing the polyethylene with air, economy is realized in two ways: (1) The polyethylene saved by the void spaces in the expanded poly and (2) The resulting structure has a lower dielectric constant thus requiring a thinner wall to obtain the required capacitance. Since the initial field trial in 1950 of polyethylene insulated conductor cable (which is called PIC cable) the use of this type of cable in place of cable insulated with strip paper of pulp has grown rapidly. Extra pairs are included in paper and pulp insulated cable to insure that a specified number of pairs will be usable.

The types of polyethylene insulated cable, commonly called PIC cables, which have been manufactured from 1954 to 1958 are generally termed as ODD count PIC because they include an extra pair with each 100 pairs or fraction thereof to conform with paper and pulp insulated cables. Polyethylene is much more reliable as an insulating material than strip paper and paper pulp. This together with improved manufacturing techniques makes it possible to guarantee that all pairs will be free from shorts, crosses, opens and grounds.

A new type of PIC cable was designed in the late 50's and is designated as EVEN count PIC cable. It is so designated because it does not have an extra pair for each 100 pairs or fraction thereof. Since all pairs in PIC cable are guaranteed to be free from opens, shorts, crosses and

TCI Library: www.telephonecollectors.info

grounds, the extra pair is not needed as a substitute for defective pairs. It is obvious also that, without extra pairs, the pairs within the cable may be divided into uniform size groups. A 25 pair unit has been selected as the most suitable size for a standard group and all cable sizes except those smaller than 25 pairs, can be divided by this number. The pairs of the 25 pair group are identified by a simple code which uses 10 colors, 5 for the tip conductor and 5 for the ring conductor, with no duplication. The 25 pair groups are bound with bicolor binders made from thin strips of polyethylene. The colors of these binders follow the same color code as is used for the pairs. Such an arrangement permits fast and easy identification of any conductor or pair in the cable without the aid of translation charts. Self supporting PIC cable is now commonly used in aerial cable plant, where the support wire is built into the center of the PIC cable instead of lashing to a separate support wire.

It will be noted that unlike the development of inductance loading and repeaters, cable development received its initial impetus in the exchange area rather than in the toll plant. However, the development of better cables naturally resulted in their use over long distances. Toll cables between nearby centers of population, are placed on existing pole lines. These are called "aerial cables," as opposed to the "underground" cables in ducts below street level, or the more recently developed "buried" cables which are placed directly in ploughed trenches in the ground in open regions of the country.

When phantom circuits were introduced, their successful application to cable was contingent upon a method of reducing crosstalk by means similar to the phantom transpositions in open-wire lines. For this purpose "quadded" cable was introduced. A quad is two pairs of wires twisted around each other, in the same manner as the wires of each pair are twisted. A toll cable may contain a few unquadded pairs, such as those used for the transmission of broadcast programs; but in most cases, nearly all the units are quads.

One element of circuit design in most of the longer voice frequency cable circuits and in all carrier circuits, is that the effect of near-end crosstalk is minimized by the use of separate paths for transmission in the two directions. In cable circuits, the pairs carrying the transmission in two directions are separated as much as possible by placing them in different layers in the cable; or, in the case of "K" carrier circuits in different cables.

TCI Library: www.telephonecollectors.info

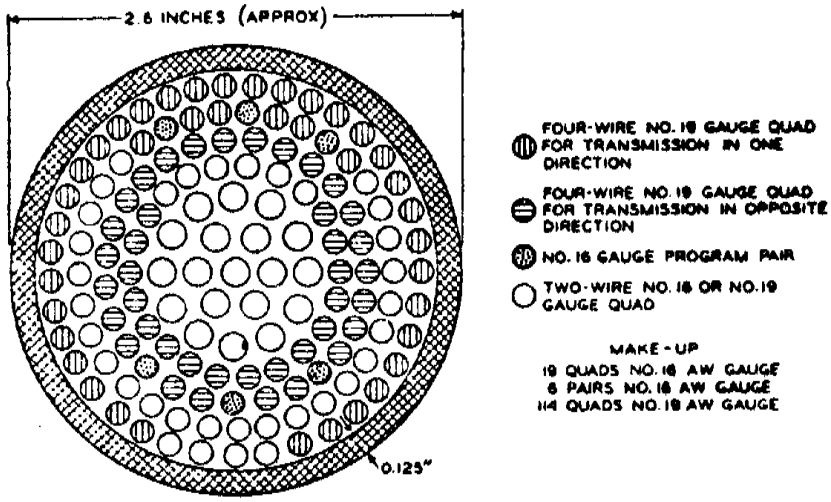

Figure 15-10 - Typical Toll Cable

15.8 COAXIAL CABLE

Coaxial cable was designed for broadband transmission, such as transmission of television signals or long-haul toll circuits where carrier systems may be economically employed. Coaxial cable is not a balanced transmission line like paired cable. It is completely unbalanced, one wire being used for transmission and a grounded cylindrical shield for the return conductor. Crosstalk, noise, or other interference cannot, therefore, be controlled by twisting the conductor. Interference is controlled entirely by the shielding action of the ground return conductor, which completely surrounds the center conductor. The efficiency of the shielding action increases with frequency and is therefore limited to use for transmission of high frequencies with a lower limit of approximately 50 KH_z. In actual use the coaxial lines are stranded into a cable along with paper insulated pairs. A typical cross-sectional view is shown in Figure 15-11.

Some of the paper insulated pairs are used for control of the repeaters needed on the coaxial system while others may be used for short-haul voice toll circuits between neighboring central offices where carrier systems are not economical.

TCI Library: www.telephonecollectors.info

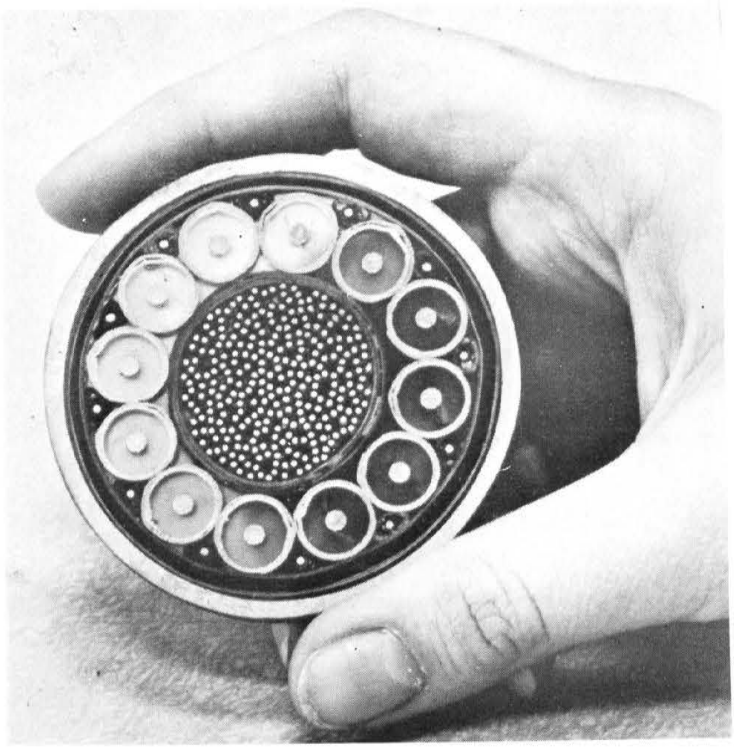

Figure 15-11 - Coaxial Cross-Section

A. ETV COAXIAL CABLE

Multichannel educational television, including color, is economically feasible for limited school budgets, mainly because of the availability of four coaxial types as shown in Figure 15-12. Basic coaxials for aerial or duct installations, CA-1878, and for plowing, CA-3002, are supplemented by coaxial cable with PIC pairs for intercity trunk use, CA-3015 and CA-3016, for buried and aerial applications respectively. Coaxial cables with PIC pairs are also available for use at airports, colleges or in other situations where there are heavy circuit requirements for exchange or centrex service, interoffice trunks in addition to broadband data and video grade circuits.

Aerial cables can be lashed on to an existing cable and support strand, or on a separate suspension strand. These aerial coaxials, CA-1875 and CA-3016, can also be installed conveniently in duct or conduit. For buried applications, the new C Cable Plow accommodates the CA-3002 and CA-3015 cables for plowing in most any terrain. Exacting tolerances and rigid quality control in the manufacture of these coaxials permit hi-quality transmission of six ETV broadcasts from 8 to 88MHz.

TCI Library: www.telephonecollectors.info

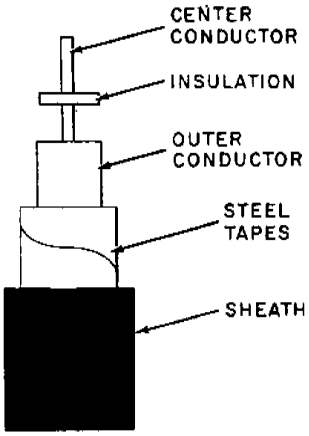

CA-1878
ALPETH SHEATH
TV ONLY; AERIAL OR DUCT

Single coaxial tube where plowing is not possible or practical. Used extensively in early ETV installations, CA-1878 has been modified to include an aluminum shield preventing interference from nearby mobile radio or other transmitters in the 45 to 50 megacycle range.

CA-3002
PASP SHEATH
TV ONLY; BURIED

Single coaxial tube. A layer of corrugated steel stiffens the cable against deformation during the plowing operation; an aluminum shield provides lightning protection.

CA-3015
PASP SHEATH
(with PIC pairs)
TV PLUS MESSAGE OPTIONS; BURIED

A choice of 16, 37 or 63 voice pairs around the coaxial tube is available for those applications where ETV can be combined with other services in the same sheath. Same PASP design as CA-3002.

CA-3016
ALPETH SHEATH
(with PIC pairs)
TV PLUS MESSAGE OPTIONS; AERIAL OR DUCT

Identical to CA-3015; but has no corrugated steel layer or inner polyethylene jacket; same PIC options of 16, 37 or 63 pairs arranged around coaxial tube.

Dia over sheath:
0.61"
Wt. (lbs. per ft.)
0.2

Dia over sheath:
0.81"
Wt. (lbs. per ft.)
0.32

Dia. over sheath:
16 pr.: 1.16"
37 pr.: 1.37"
63 pr.: 1.56"
Wt. (lbs. per ft)
16 pr.: 0.66
37 pr.: 0.94
63 pr.: 1.25

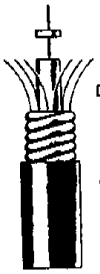

Dia. over sheath:
16 pr.: 0.99"
37 pr.: 1.19"
63 pr.: 1.38"
Wt. (lbs. per ft.)
16 pr.: 0.44
37 pr.: 0.66
63 pr.: 0.98

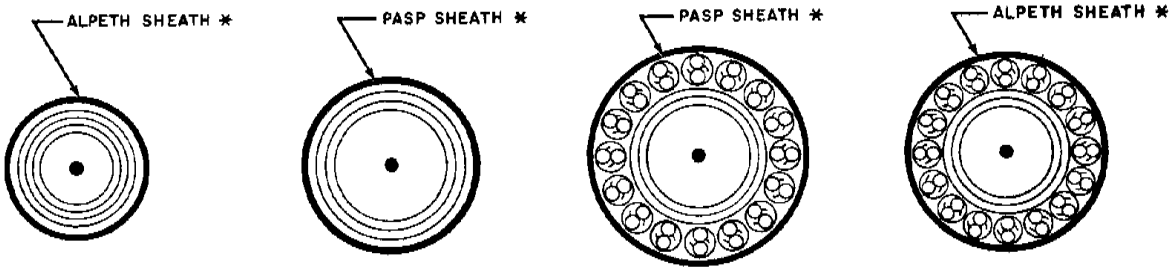

* SEE SHEATH CONSTRUCTION

Figure 15-12 - Mechanical Characteristics Coaxial Cables Specially Designed For Educational Television

TCI Library: www.telephonecollectors.info

Figure 15-13 provides a typical layout of part of a closed circuit television system. A brief explanation, omitting facility and equipment details, follows.

At the origin, video and sound base-band signals are accepted from the customer by a TRANSMITTING MODULATOR in which the appropriate video and sound intermediate frequency carriers are modulated for transmission to the subscribers' sets. This modulator is not required for community television antenna systems.

The modulated signals are transmitted from the origin over feeder cables. PRIMARY FEEDER cables differ from SECONDARY FEEDER cables only in that the latter provide connections for distributing the signals to subscribers. It is possible, in some routes or systems, that secondary feeders only will be provided. Other systems, such as Educational TV systems will be comprised almost entirely of primary feeders.

Branches of feeder cables are derived by the use of DIRECTIONAL COUPLERS which act as passive (no amplification) dividers.

A LINE AMPLIFIER is used at intervals along the feeder cables to compensate for attenuation of the signals. An EQUALIZER is required in each amplifier section to assist in compensating for transmission differences in the signal frequencies as temperatures vary. AUTOMATIC LEVEL CONTROL is applied at every third line amplifier to assure maintenance of signals at their proper strength.

BRIDGING AMPLIFIER, connected to the secondary feeder cable by a passive divider provides a means for connecting DISTRIBUTION CABLE to the feeder cable. Several (up to four) distribution cables may be connected at a bridging amplifier. Maximum length of a distribution cable should vary from about 1000 feet to 1500 feet, depending upon frequencies transmitted.

A TV TERMINAL is required at each service drop connection at the distribution cable.

A LINE EXTENSION AMPLIFIER may be used to permit the use of longer distribution cables. Only one such amplifier may be used in each distribution cable, as a greater number results in considerable signal distortion. Maximum length of distribution cable, with a line extention amplifier located near the center of the cable, is about 2000 feet to 3000 feet, depending upon the frequencies transmitted.

TCI Library: www.telephonecollectors.info

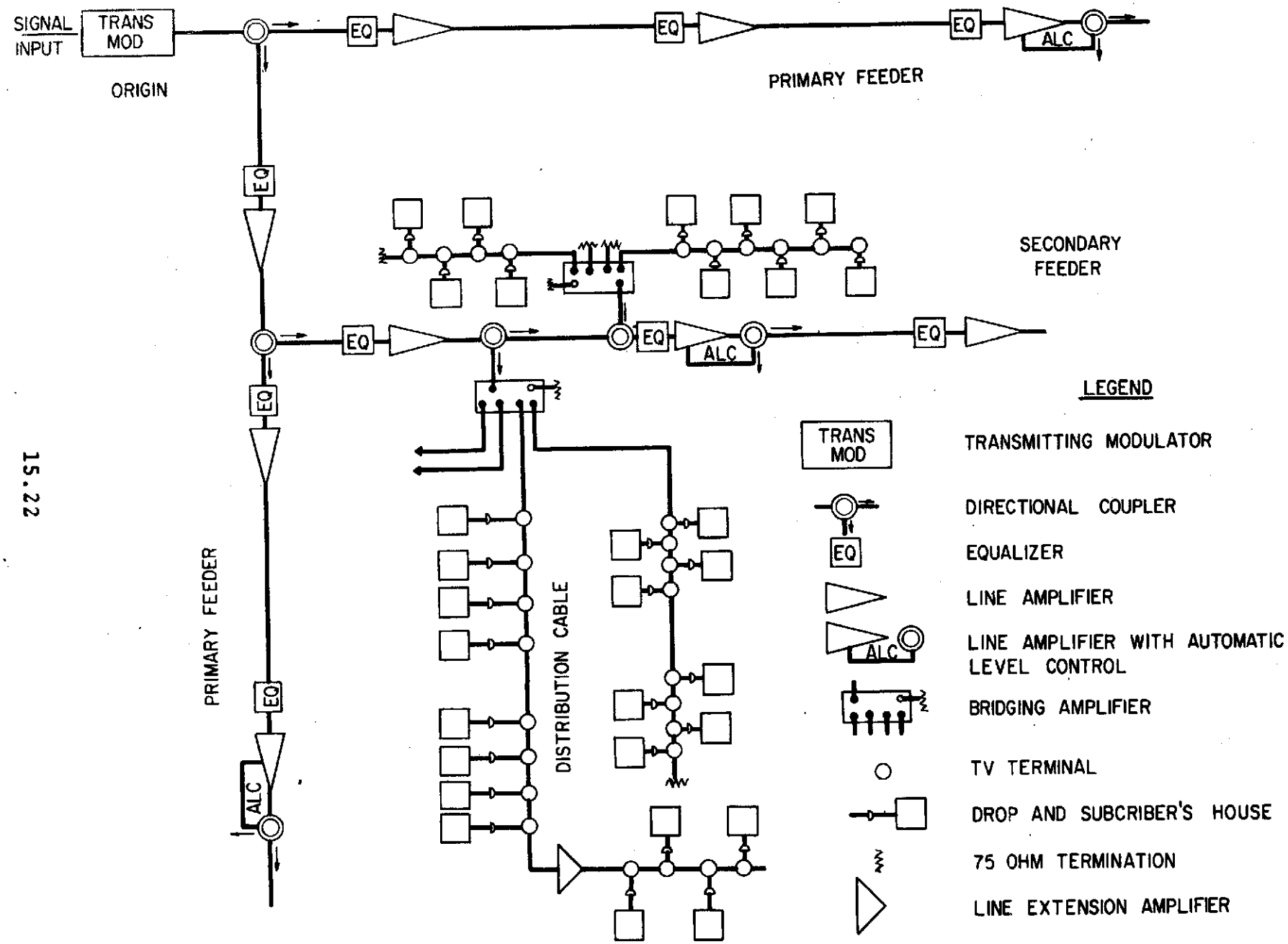

Figure 15-13 - Typical Layout - Closed Circuit TV System

TCI Library: www.telephonecollectors.info

Seventy-five (75) ohm TERMINATION is required at the end of each distribution cable or at each unused position on the bridging amplifiers to reduce echo effects in the system.

A grounded fitting for terminating the drop must be provided on the subscribers' premises. This fitting will generally provide the point of demarkation between Telephone Company plant and plant which is the responsibility of the user.

The foregoing description, being very general, applies equally whether the system is aerial or underground.

15.9 SUBMARINE CABLE

Another type of cable facility is submarine cable, such as the four transatlantic cables, the two cables to Hawaii with single continuation to Philippines and Japan, and the individual cables to Bermuda, Puerto Rico, Cuba, Jamaica - Canal Zone, and St. Thomas - Caracas.

The success of these cable runs, however, has been the result of over 90 years' work. The first successful wire communications systems across large bodies of water made use of a telegraph cable laid across the Atlantic Ocean in 1866. This cable, the first success after a decade of unsuccessful attempts, operated only one month before failing. Success on even such a limited scale, however, furnished the impetus for further work and by 1900 a number of telegraph cables were in operation beneath the Atlantic.

Although transoceanic voice communications have been established since 1927 by the use of radio systems, no attempt has been made to establish transoceanic wire communications for voice until recently. The need for wire communications is twofold. First, additional channels cannot be added to the radio system because of lack of space in the frequency spectrum. Secondly, radio systems are subject to varying periods of outage due to atmospheric conditions such as storms, sun spots, etc.

When engineers began to think in terms of voice communications on submarine wire, it was evident that the existing telegraph cables were inadequate. These were single conductor wires having high attenuations. The resulting bandwidth of the first transatlantic cables, using the best available techniques in terminal apparatus

TCI Library: www.telephonecollectors.info

amounted to only 1-1/2 cycles per second. Bandwidths of some later cables were extended to about 100 cycles per second by the use of permalloy tape continuous loading to reduce the attenuation.

The first deep sea cables used for telephone use were laid between Key West and Havana in 1921. These were also the first deep sea cables using a coaxial return conductor; they were also continuously loaded with permalloy tape. Each of the three cables handled one telephone circuit and two telegraph circuits.

In the early 1930's it became apparent that any economical long underwater system would require repeaters. For the next 20 years, development was directed toward such a system. This resulted in 1950, in a submarine cable system between Key West and Havana with flexible submerged repeaters. By this means the attenuation was reduced to the point that 24 telephone circuits were derived from 2 cables, one for each direction of transmission. Similar systems were laid across the Atlantic with 36 telephone circuits.

The recent transatlantic cables had the appearance shown in Figure 15-14, and were used from 1950 to 1962.

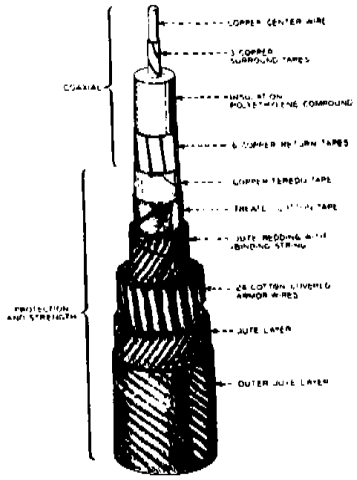

Figure 15-14 - Submarine Cable

TCI Library: www.telephonecollectors.info

The Key West to Havana cable system supplied 24 channels per pair and the transatlantic system supplied 36 channels per pair. These numbers correspond to bandwidths of one or two hundred KHz which were considered reasonable when the system was designed because of repeater limitations. In general, the economic balance between the cost of the transmission medium and the cost of the repeater requires that a system of higher bandwidth have a lower loss transmission line. A lower loss coaxial, in turn, means a larger coaxial with a larger center conductor. Because of skin effect, the large center conductor of a large coax is used inefficiently from a transmission standpoint.

The center of this conductor could be eliminated, or better still, it could be replaced with a strength member to help support the cable during laying and recovery. In fact, by changing the ratio of inner conductor diameter to outer conductor diameter slightly, all of the strength necessary to support the cable can be placed inside the center conductor. The construction of the present design can be seen in Figure 15-15, and in use since 1962.

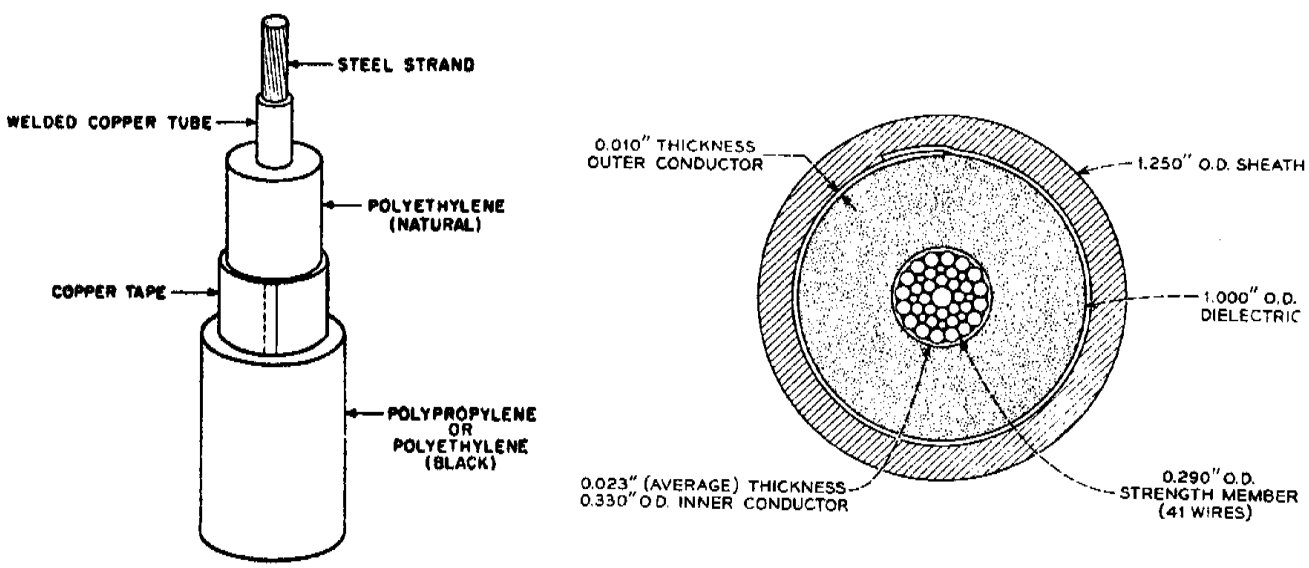

Figure 15-15 - Ocean Cable (Armorless-Lightweight)

TCI Library: www.telephonecollectors.info

The steel support wires can be observed inside the center conductor. The center conductor is insulated from the outer conductor by polyethylene. The outer conductor is made up of a copper tube. Another important design consideration in this new cable is that the torque under tension is considerably smaller with this design since the support wires are at the center of the cable. Because of this, twisting tendencies of the cable under tension are nearly eliminated. In the type of cable employed in the first transoceanic runs, the direction of spiral was the same for the inner tapes, return tapes and the armor wires. Thus the weight of the cable as it was lowered to the ocean floor was sufficient to put a torsion force on the cable. This torsional force was sufficient to put 16 complete turns in the cable per 100 feet during the laying process.

With this amount of untwisting during the laying process, the center conductor of the coaxial is stretched far beyond its elastic limit. When the cable reaches the floor of the ocean and the weight is removed, the cable again twists up. What then happens to the excessive length of the center conductor? It is believed that the hydrostatic pressure to which it is exposed molds it back into its original configuration. The new design, with its lower weight and smaller torque produces an untwisting of only one turn per 100 feet during the laying process which is well within the elastic limit.

15.10 AERIAL CABLE PLANT

If a cable is placed aerially it must be supported. The size of the support wire is determined by the size of the cable which it is to support, anticipated storm loading conditions and the distance between poles, or span length. The support wire may be secured in place first and the cable may be lashed to the strand or the two operations may be combined as is done in the case of prelashing. Also available is an aerial cable that is self-supporting, which does away with lashing to a support wire.

15.11 UNDERGROUND CABLE PLANT

Underground plant proves in economically in congested areas where right-of-way for aerial construction is difficult and expensive to obtain, or city ordinances prohibit the placement of aerial cable. Underground cable is much less susceptible to accidents and storm damage than aerial cable, and when large cables are involved this results in substantial maintenance savings which can offset part of the

TCI Library: www.telephonecollectors.info

high first cost of an underground conduit system. The conduit itself has been made of such things as asbestos fibre, wood or paper fibre impregnated with coal tar, soapstone, and fiberglass. The most commonly used material, however, is a vitrified clay. It is formed in straight sections of single duct or 2, 3, 6 and 8 duct multiple units. In addition to the straight sections it can be obtained in curved sections called mitered duct, for use when it is necessary to change the horizontal direction or vertical depth of the subway, or when it is necessary to grade the conduit up or down to avoid an obstruction. Transposition conduit having an angular twist of 22-1/2 degrees between its ends is used to change from a construction in which the conduit is laid on its longer side to one laid on its shorter side. Several of these special purpose configurations are shown in Figure 15-16.

Each kind of clay conduit is available also in a special form having longitudinal scorings midway along the walls of the ducts. This scoring permits the units to be separated into several pieces and reassembled. In this way, scored conduit is used to restore existing subways that may be broken during street excavations, or to replace conduit removed by telephone men while clearing trouble in the cable.

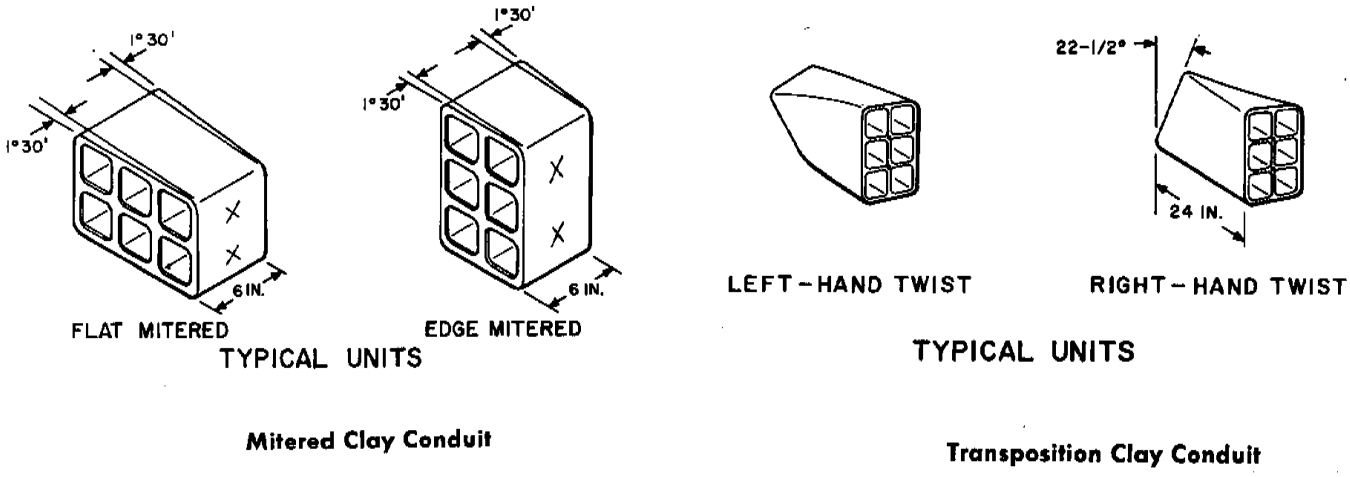

Figure 15-16 - Conduits

TCI Library: www.telephonecollectors.info

When two sections of conduit are to be joined, dowel pins are placed in the dowel holes at the end of one section and the next section is guided into place so that the dowel pins engage its dowel holes. The two sections are then sealed by means of a mortar bandage. Figure 15-17 shows the appearance of a mortar bandage. The mortar bandage is simply a piece of folded cheesecloth enclosing a ribbon of cement. The bandage is prepared on location and wrapped around the joint and tied in place.

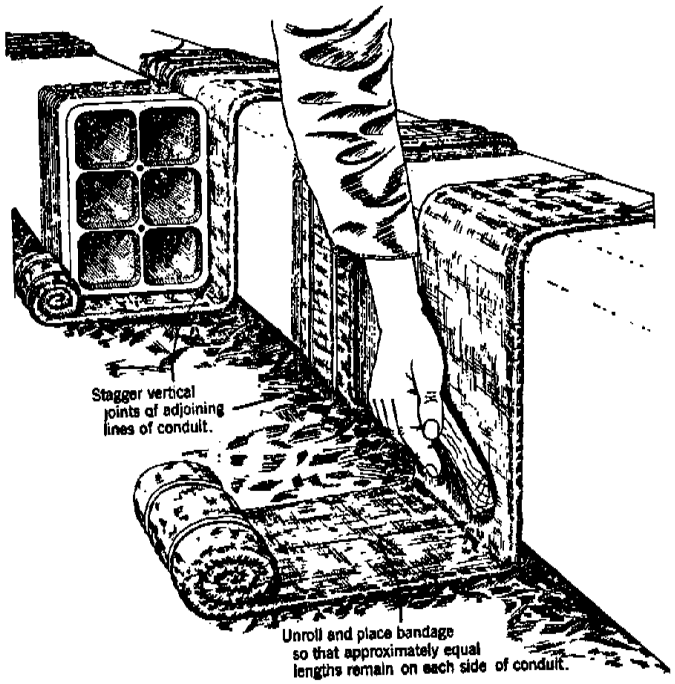

Figure 15-17 - Underground Mortar Bandage

The cost of installing a duct system is quite high. Since the cost of tearing up the road and digging the duct trench is the major cost of a duct system, care is taken to make a good estimate of the future requirements so that an adequate duct structure can be installed initially.

15.12 BURIED CABLE PLANT

A buried system differs from an underground system in that the cable is placed directly into ground without the use of conduit. Buried cables have been used to an increasing extent in recent years with the advent of moisture resistant plastic insulations. As compared to underground cable in conduit, buried cable is cheaper to install. As compared to aerial cable, it is subject to

TCI Library: www.telephonecollectors.info

fewer hazards to service continuity. It is subjected to smaller and slower swings in temperature which makes transmission regulation less of a problem. It is also usually easier to obtain right-of-way for buried plant than for aerial plant. In the past, the chief use of buried exchange plant was in locations where aerial lines were not suitable from an appearance standpoint, as in high grade residential sections or where clearance was a problem, such as near airports.

Buried cable has the disadvantage that an additional cable installation is just as expensive as the first installation while an additional aerial cable can be placed on the existing pole line. It is also more costly to locate a fault in the buried plant than it is in the aerial plant. New techniques in the art of fault location are, however, continually being developed to improve this situation.

The procedure for burying distribution plant involves opening a trench for the cable and a series of connecting lateral trenches for the service wires to houses. The cable and service wires are then placed in the trenches. A loop of cable, about 5 feet in length is left above ground at each terminal location and the trenches are then refilled and tamped. A terminal such as shown in Figure 15-18 consists essentially of a pointed metal post, which is driven in the ground, and a cable closure. The cable is looped in the closure through the bottom, after which a section of cable sheath is removed so that any pair in the core will be accessible for making a connection to a subscriber at that point. Service wires to a number of subscribers are usually provided from each terminal point. At the house end, the service wires are brought through a small opening in the building wall, either above or below ground level.

15.13 DISTRIBUTION WIRES

With the advent of polyethylene with its high dielectric breakdown and nonhygroscopic properties it became feasible to use unsheathed cables. These unsheathed cables are called distribution wires and they have distinct advantages over sheathed cables in the smaller size ranges. Their transmission characteristics, when dry, closely resemble those of pairs in sheathed cables, but when wet they change considerably in transmission characteristics. Used with discretion and in moderate lengths, they have a very definite field of use.

TCI Library: www.telephonecollectors.info

One of these is the B Rural Wire. It is intended primarily as a distribution facility in rural areas. It consists of six twisted pairs of 19-gauge copper conductors around a polyethylene insulated 109E support wire. Each conductor is insulated with polyethylene followed by a second layer of polyvinyl chloride or PVC for short. PVC is somewhat more abrasion-resistant than polyethylene and the pairs are completely color-coded. Each pair has a different twist length to minimize crosstalk.

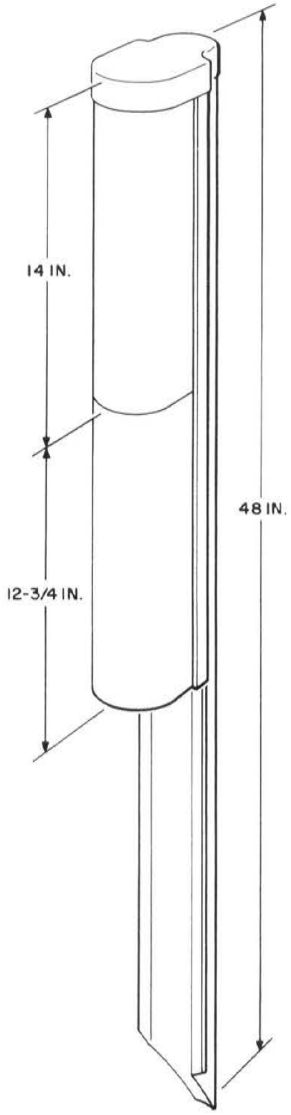

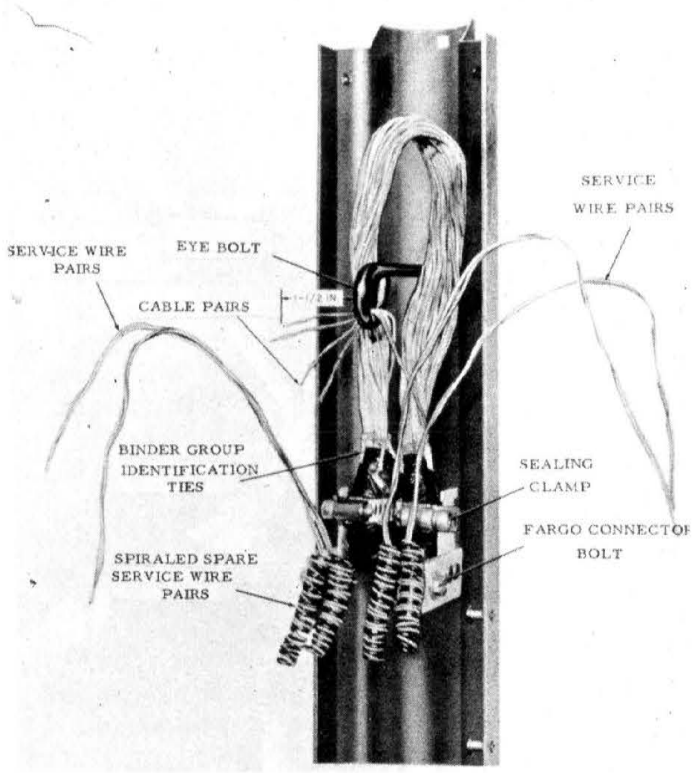

Figure 15-18 - Terminal Location

TCI Library: www.telephonecollectors.info

Since this wire has become available it has found use in a variety of ways. It is being used for extension of subscriber plant into new areas and for branches off existing main lines of cable in locations where circuits are needed for only a few customers. It is sometimes used to defer placement of cable particularly where there is immediate need for a few additional circuits on an existing route and future circuit requirements are uncertain. It might be preferable to place a B Rural Wire if this would take care of immediate requirements and probable growth over the next two or three years, at which time a better forecast of long-range requirements could perhaps be made. B Rural Wire is also used to supplement existing runs of small distribution cables by taking over part of the local distribution and thus freeing several pairs of the distribution cable for new customers located further out.

Another type of distribution wire is the B Urban Wire. This wire is similar to the B Rural Wire in construction but it is designed for use in heavily populated areas as a replacement for lead sheath block cable. Its sheathless construction furnishes access to all pairs at all poles. This makes possible quick connection of drop wires to subscribers without costly splicing. B Urban Wire has 16 twisted pairs of polyvinyl chloride-insulated #24 gauge copper conductors spiraled around a polyethylene insulated 109E support wire. Eight different twists are used to minimize crosstalk and each pair is distinctly color coded.

The transmission disadvantages associated with B Rural Wire, due to wet-dry changes in attenuation, apply to B Urban Wire also, but they are not so bothersome since urban wire is used in relatively short lengths, (typically 1000 to 2000 feet), while rural wire is used in long runs - sometimes up to 10 miles.

It is not difficult to see why the Operating Telephone Companies like these wires. They are easier and cheaper to install than open wire or cable, and drop wire connections are easier too, since there is no sheath to remove. The drop wires are connected to the B Rural and B Urban Wire by means of a clever terminal known as the "watch case" terminals. This terminal is clamped onto the support wire and furnishes access to one pair.

TCI Library: www.telephonecollectors.info

These extension facilities which have briefly been investigated are used in the aerial portion of the outside plant. As progress from these facilities toward the central office is made the number of circuits required increases and cable will be employed. This cable may be in the aerial plant, underground plant, buried plant or some combination of these three. How is it decided which type of plant to use in a given situation? This is determined mainly on a basis of economics, but there may be other factors which contribute to the decision such as community regulations, customer good will, or appearances.

15.14 PROTECTION EQUIPMENT

Protection is employed in the telephone plant for two reasons: (1) To limit the voltage to prevent breakdown of insulation or hazard to the subscriber or Company personnel. (2) To limit the duration of high current to prevent overheating or fire hazard. Limitation of voltages is accomplished by means of protector blocks which are air gaps connected across the dielectric which they are to protect and these air gaps spark over when their rated voltage is exceeded. Limitation of high current duration is accomplished by the use of fuses, heat coils, and fuse cable.

A. PROTECTOR BLOCKS

The protector blocks used to limit excessive voltages consist of two carbon blocks andhave the configuration shown in Figure 15-19.

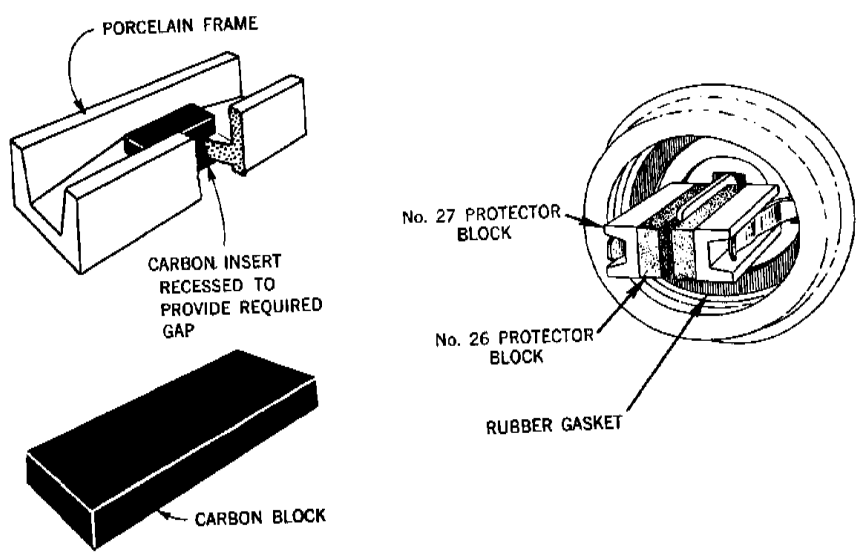

Figure 15-19 - Protector Blocks

TCI Library: www.telephonecollectors.info

When these two blocks are placed in their protector mounting a small air gap is provided between them. When the voltage across these blocks is high enough, sparkover occurs between them, providing a low impedance path around the protected facility. These blocks are currently produced in three sizes. One with a 3 mil spacing which will break down with a peak voltage in the neighborhood of 500 volts, another with a 6 mil spacing which will break down with a peak voltage in the neighborhood of 800 volts, and another with a 10 mil gap which will sparkover with a peak voltage of approximately 1250 volts. The 3 mil blocks are generally used at subscribers' premises and at the main frame at the central office. The 6 mil blocks are used at junctions between cable and open wire. The necessity of applying protector blocks at the junction of open wire and cable results from the exposure of open wire to lightning surges and the low dielectric breakdown of paper insulated conductor cable. Since the open wire has no sheath to shield it from lightning strokes it is capable of developing high voltages, but due to the wide spacing and heavy conductors used, it in itself, is not too vulnerable to damage. If, however, the open wire is connected to a pair in a cable, this cable pair is then subjected to surge voltages which may be sufficiently high to break down the conductor insulation if paper is used. Therefore, protectors must be used to prevent excessive voltages from appearing on the pairs in a cable. In localities where lightning is particularly severe, such as over a high mountain it may be necessary to use an auxiliary protection scheme. In such a case the 10 mil blocks are used as backup protection for the 6 mil blocks. These 10 mil blocks would be located 8 or 10 pole spans away from the junction of the open wire and cable. At this distance there would be sufficient impedance between the two sets of blocks to allow operation of the 10 mil blocks thus relieving a good portion of the load from the 6 mil blocks. The lightning problem at such junctions is of much less concern in the PIC cables where the dielectric strength of the conductor insulation is considerably higher than it is for paper insulated conductor cable.

Protector blocks have the advantage over fusible types of protectors in that they will clear themselves when the surge has passed. Thus, it is not required to dispatch maintenance men for this job. If a surge is continuous, such as a power cross, the blocks can develop sufficient heat and present a fire hazard. To prevent this from happening, a fuse had to be associated with the protector blocks at the subscribers' premises. Elimination of this fuse, by increasing the current carrying capacity of the

TCI Library: www.telephonecollectors.info

protector blocks, was possible by the development of a new type cylindrical shaped protector block. Essentially the construction is the same; the gap being provided between two carbon blocks; but in this type of protector a low melting point alloy slug is provided behind one of the carbon blocks. When the blocks sparkover, the ground path is established through this slug and if arcing continues the slug melts establishing a metal-to-metal path which bypasses the carbon blocks before sufficient heating of the blocks occurs; thus avoiding a possible fire hazard. In this case, of course, the cable circuit will be grounded until a new protector block is installed. This type of protector is shown in Figure 15-20 along with a schematic showing its operation.

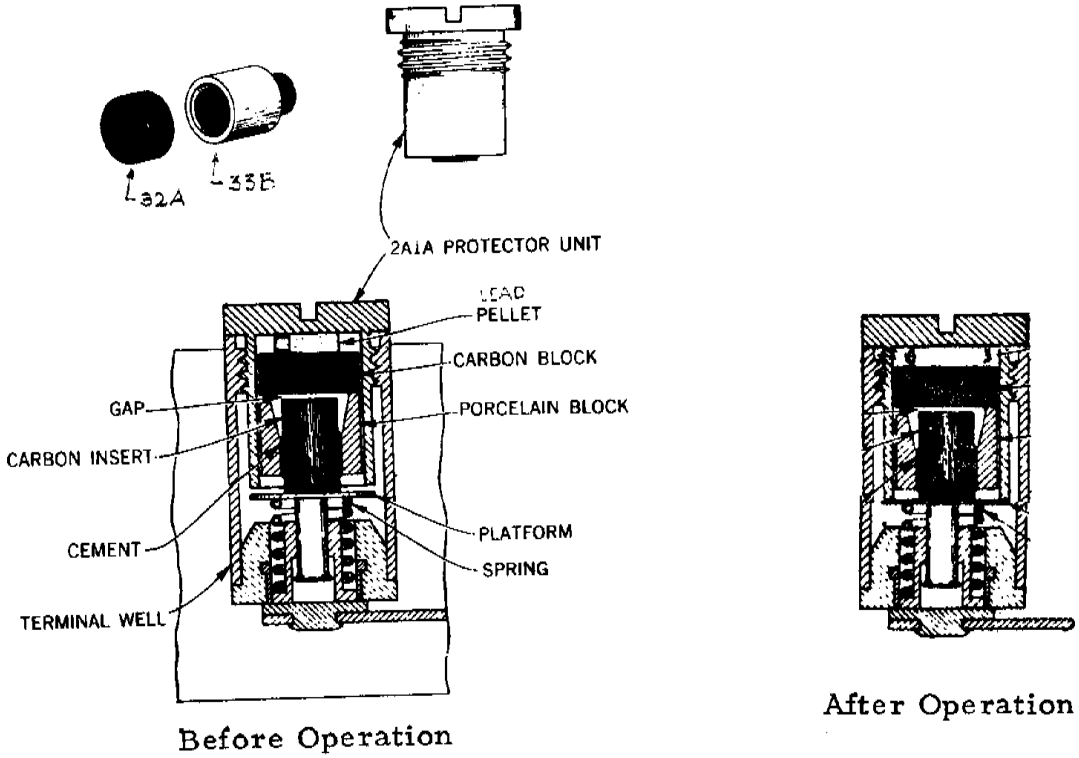

Figure 15-20 - Cylindrical Protector

B. SNEAK CURRENT PROTECTION

When foreign voltages are not high enough to operate the protector blocks the currents produced by these voltages must flow through the terminal equipment. These "sneak currents" although small may be high enough to produce a fire hazard if they are allowed to persist. To protect

TCI Library: www.telephonecollectors.info

against this possibility either heat coils or fuses must be used. The heat coil is used to protect central office wiring by providing a low impedance to ground in the event of a persisting current. Physically, the heat coil has the appearance shown in Figure 15-21.

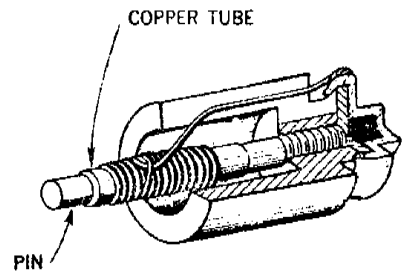

Figure 15-21 - 76A Heat Coil

The heat coil consists of a coil of fine wire wrapped around a copper tube in which a pin is soldered. The heat coil in its mounting is in series with the telephone conductor. When the current in the coil heats the copper tube sufficiently to melt the solder, the pin, which is connected with the line side of the coil of wire, moves under the pressure of the mounting spring and grounds the conductor. Grounding rather than opening serves two functions; it provides a signal announcing that the line is in trouble, thus reducing out-of-service time; and it also prevents the appearance of unwanted voltages on the main frame.

At the subscribers' premises protection is also provided against sustained currents. The protection generally applied here consists of 7 ampere fuses in conjunction with the rectangular 3 mil protector blocks already mentioned. 3 mil circular blocks with a fusible element are also used. The 7 ampere fuse is capable of interrupting excessive currents at voltages up to approximately 3000 volts, above which arcing will occur. Therefore, in high voltage joint use areas where the power voltages may exceed 3000 volts, additional protection is needed to insure a maximum of 3000 volts at the subscribers' station. For this purpose a 118A protector shown in Figure 15-22 is utilized.

TCI Library: www.telephonecollectors.info

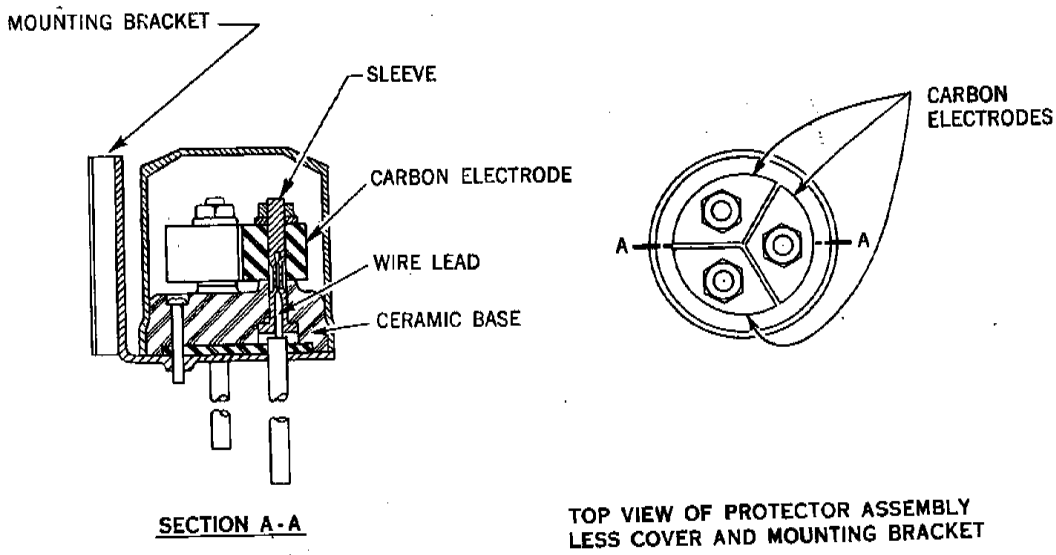

Figure 15-22 - Heavy Duty Protector In Weatherproof Mounting

This protector consists of three pie-shaped symmetrically arranged carbon sections separated by air gaps. The breakdown between them occurs at voltages lower than the 3000 volts required for sustained arcing of the station fuses. It finds its field of application in joint use areas involving open wire where a power cross can get directly onto the cable pair. The protector is connected from each side of the open wire to the grounded neutral of the power circuit.

C. LIGHTNING PROTECTION

Lightning may appear on exchange cable in three ways:

1. By direct strokes

2. By induction

3. By conduction

No concern is needed with direct strokes since large aerial cables and properly engineered buried cables can take most direct strokes. Small aerial cables can usually take small direct strokes. Induced lightning surges are the most frequent type, but they are usually of quite low magnitude. The major use of protection devices is to limit

TCI Library: www.telephonecollectors.info

the effects of conduction surges. There are several methods of reducing the likelihood of dielectric breakdown between conductors. Cable can be made to withstand higher magnitude surges by increasing the dielectric strength of the conductor insulation, increasing the dielectric strength of the core wrap, reducing the magnitude of the surge reaching the conductors by adding additional protector blocks at interval along the cable, or increasing the sheath conductivity thereby limiting the voltage buildup between the sheath and conductors.

These basic factors involved in exchange cable troubles due to lightning can be applied to toll cables also, but their importance may be quite different. A toll cable has few, if any, subscriber connections. Furthermore, if surge voltages are induced in the cable pairs from the cable sheath there is a much smaller possibility of high potential differences developing between adjacent cable pairs. These potential differences on other than toll cables are caused by subscriber connections of various positions and types existing along the cable permitting surge buildup between pairs. Since, it is difficult for surges to enter an individual cable pair, there are fewer conductor-to-conductor faults in toll cable than in the exchange cable. One type of fault experienced in the toll plant and not in the exchange plant is crushing where coaxial cable is involved. This crushing occurs in buried plant where the ground is wet. When the surge hits the ground in the vicinity of the cable, the moisture is converted to steam and the force of the steam pressure crushes the cable. An over-all quick glance at the typical outside plant protection scheme can be seen in Figure 15-23. Thus far those facilities which have been in use for years and have until recently proved themselves quite adequate, have been stressed. However, with the advent of the semiconductor, new problems have to be dealt with in the telephone plant. The 500 volt protection provided by the protector blocks was no longer adequate in the many applications involving semiconductors. In some cases, metallic voltages (voltage between the wires of a pair) as low as 10 volts can cause failure. Since protector blocks cannot be made to function properly with an air gap of less than 3 mils, which provide 500 volt protection, it was necessary to take a new approach to provide protection for semiconductor devices. A rather natural philosophy evolved - why not use semiconductor devices to protect semiconductor equipment? An arrangement of two voltage limiting semiconductor diodes connected back-to-back in parallel with

TCI Library: www.telephonecollectors.info

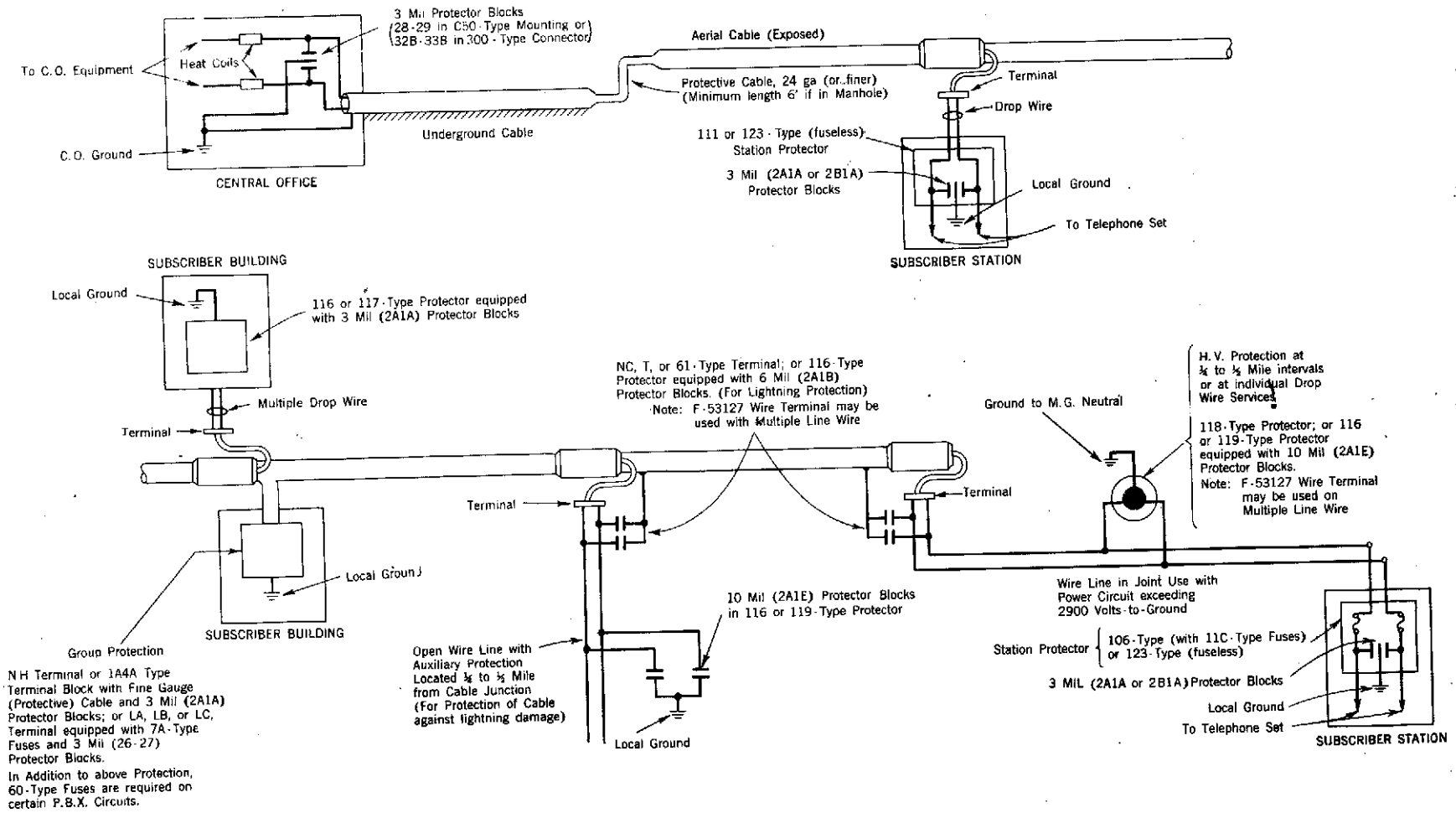

Figure 15-23 - Typical Protection Scheme

TCI Library: www.telephonecollectors.info

the equipment to be protected has proved to be an effective means of providing low voltage protection. This method of protection uses the zener breakdown region of a diode as a means of limiting the voltage. The method of operation may be explained briefly as follows. The voltage current relationship for a diode is shown in Figure 15-24.

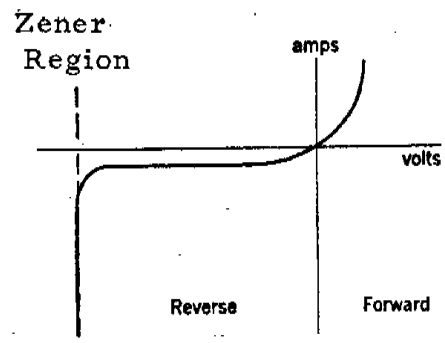

Figure 15-24 - Diode Characteristic

As the reverse voltage on the diode is increased, the current increases only slightly until the zener breakdown region is reached; at this point a slight increase of reverse voltage causes the current to increase rapidly to a high value.

A lightning surge in the telephone plant is usually a unidirectional impulse with a rapid rise and an exponential decay, but can be of either polarity, therefore, it is necessary to use two diodes, back-to-back to provide protection. At the present time silicon-alloy diodes can be produced having breakdown values within the range of 4-1/2 volts to 500 volts. Their main fault at present is that their current-carrying ability is very much less than the magnitudes of surge current presented to the plant. Consequently, diode protection can only be used in combination with some form of heavier duty primary protection, such as protector blocks.

15.15 GAS PRESSURE FOR TOLL CABLES

In 1926, the idea of making the cables gastight and maintaining them under continuous internal pressure was conceived along with the plan of providing some form of mechanical device which could be connected permanently to the cable and so arranged that a decrease of pressure would

TCI Library: www.telephonecollectors.info

operate an electric alarm. The first work done in the field employing these principles was in the early part of 1927, using dry nitrogen gas. From that date to the present time, there has been a continued development in the technique of employing gas under pressure for the purpose of keeping moisture out of the cables and as a means of locating small openings in the sheath.

In utility work, service is the commodity offered to the customer and reliability of service is a prime consideration in marketing service.

With the advent of carrier development, the number of circuits carried in a cable increased tremendously and the importance of avoiding interruptions to service increased proportionately. This is exemplified by the 225 voice frequency circuits afforded by a full size cable, which compares with a circuit possibility of over 2,000 for a cable of the same size containing coaxials and paper insulated conductors operated on a carrier basis.

To protect this concentration of circuits from interruption, all of the long toll cable plant is maintained under gas pressure. In order to apply gas under pressure to the practical maintenance job, it has been found desirable to install gastight plugs, at intervals, which will confine the gas to a limited length of cable.

The length of cable included in one gas section will depend upon the resistance to the flow of gas in the cable and the degree of protection required. In general, this length is between 50,000 and 60,000 feet, but sections as short as 25,000 feet, or as long as 34 miles have been employed in actual practice.

Because the gas is placed in the cable so as to prevent moisture from entering through small openings in the sheath, it is essential that a certain limited pressure range be maintained. In order to determine when this pressure has reached the minimum limit, a low pressure warning device, called a contactor, is provided at regular intervals. This unit consists of a Bourdon tube and electric contact with associated mechanical features, arranged in such a way that the electric contacts normally are held open by the pressure of the gas. When the pressure falls below a certain predetermined value, the contacts close and place a short circuit across a pair of conductors, called the "alarm pair," which operates an alarm in an

TCI Library: www.telephonecollectors.info

adjacent attended office. Assuming a normal underground or buried gas section of 60,000 feet, one such contactor usually is placed about 5,000 feet from each end of the gas section and four others are spaced uniformly along the cable at 10,000-foot intervals.

To provide a means of measuring the pressure of the gas, valves similar to those used in automobile tires are spaced fairly uniformly along the cable about 3,000 feet apart. Some deviation from this spacing, however, is permitted if the location of the valves can be made more accessible to the maintenance personnel. Such valves also are provided at the location of each contactor and on each side of the gastight plugs.

In addition to contactors and valves, there also is provided at each contactor location a means whereby the maintenance forces can connect a telephone to a pair of conductors and establish communication between these points and an attended telephone office. The pair of wires in the cable for this communication is commonly referred to as a "talking pair," which is stubbed out of the cable and connected to a terminal in a watertight housing.

15.16 LINE CONCENTRATOR

In telephone systems, the instruments of the telephone users have always been connected to the central switching point over individual paths (except in the case of party lines). Since 1908, and probably earlier, development engineers have been trying to devise a method of utilizing the accepted principles of concentration and expansion, which form the basis of all switching systems, for reduction of the number of paths required between the users and the switching point, without affecting service.

Not until fairly recently (1960) has the state of the art advanced to the point where such a "concentrator-expander" (now generally called a "Line Concentrator") could be designed to be practical and economically attractive as compared with individual metallic conductors between the customer's premises and the central office. Some of the new developments which have contributed to this success are: magnetically latching switches and relays which use no power during the period a connection is held, but only during the setup and disconnect intervals; new power stores, such as large capacitors or nickel-cadmium batteries, which can be used at the remote concentrator to provide power for

TCI Library: www.telephonecollectors.info

performing the setup and disconnect functions, and which can be replenished by power from the central office during the periods where there is at least one idle trunk; better metal finishes which permit electromechanical apparatus to be used in outside environments, in weatherproofed housings without undue corrosion.

There are two major fields of use for line concentrators: (1) temporary use to defer outside plant construction and (2) permanent use. They may also be used in emergencies to provide service in areas requiring extensive short-term service.

Temporary use of concentrators is economical in areas where deferment of cable reinforcement is desirable or necessary because of slow, unpredictable or unstable growth, because of seasonable fluctuation in the demand for service, or where large capital expenditures can be deferred. The length of time that cable reinforcement can be deferred depends, of course, on the relative annual charge rates of cable and whatever concentrator arrangements are substituted, and also on the length of time before the cable reinforcement becomes absolutely necessary. The recent trend toward higher investment per line for outside plant than for central office equipment tends to make concentrator installations more attractive than they would have been a few years ago. Figure 15-25 shows a typical situation where concentrators can be used on a temporary basis.

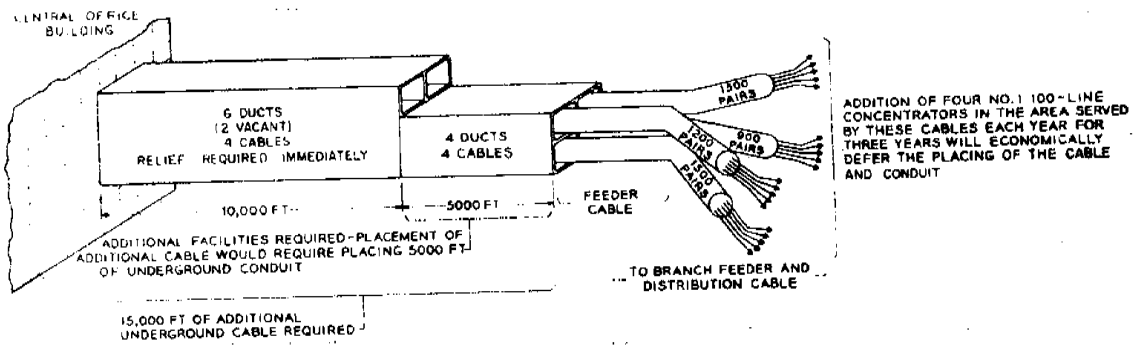

Figure 15-25 - Temporary Use of Concentrators

TCI Library: www.telephonecollectors.info

Concentrators can also be used economically on a permanent basis where the distance from the central office is such that annual charges for cable facilities are greater than annual charges on facilities developed through application of concentrators. Figure 15-26 illustrates such a case. Here, two 50-line and one 100-line remote units installed initially, will defer cable reinforcement for 2 years; proper concentrator additions will eliminate the need for more cable indefinitely.

In areas where customers are located beyond the normal operating range of the central office, it is customary to use "long-line" circuits. It is obvious that wherever there is a concentration of such customers sufficient to load a concentrator, great savings in long-lines equipments could be realized if they could be connected into the concentrator trunks instead of being provided on a per-line basis. Information is available which permits any Telephone Company to modify their 1A Line Concentrators so as to be usable in this manner.

Special situations arising in connection with a proposed program for modernization of the nation-wide teletypewriter switching network have resulted in the design of a-c signaling circuits which can be inserted in the control channels of the 1A Line Concentrator to extend the range, by means of multifrequency signaling techniques, to several hundred miles. In this case, of course, carrier channels will probably be used in the talking trunks.

15.17 MULTIPLING

Before examining the latest method of cable distribution to main stations, called Dedicated Outside Plant, the method of Multipling, used until recently, should be explained. Since the telephone industry is continuously changing and growing the plant must be flexible enough to handle this growth. When a new cable is installed perhaps the initial pair utilization will only be 20 to 30% and will slowly increase to 80 or 85% during the life of the cable as new subscribers are added. To obtain a pair utilization of 80 or 90% requires careful planning and growth rate estimates at the time the cable is installed. As an example refer to the 51 pair distribution cable with its associated distribution terminals presented in Figure 15-27 (a).

TCI Library: www.telephonecollectors.info

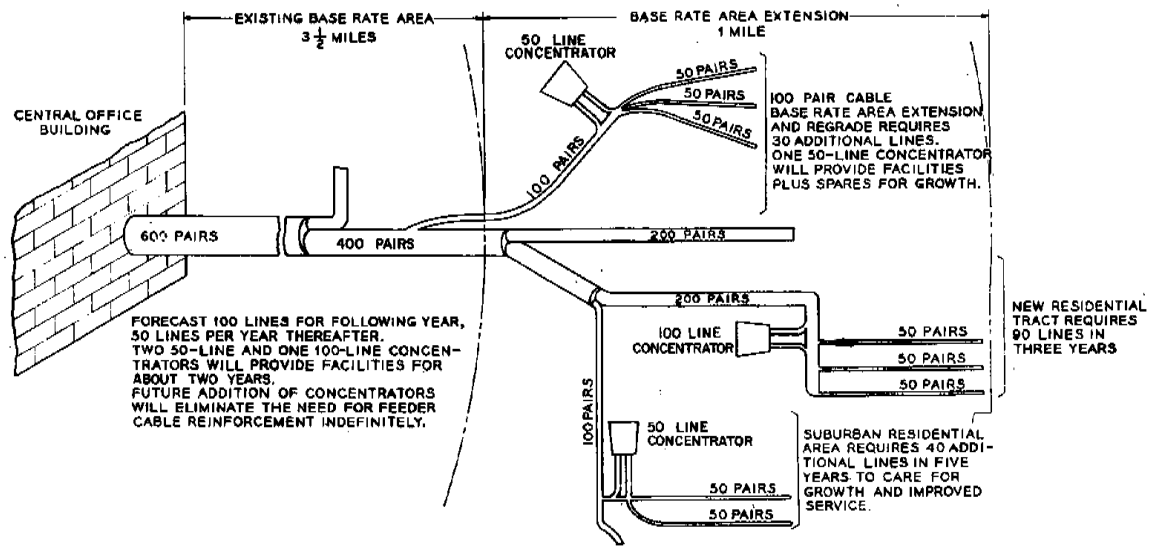

Figure 15-26 - Permanent Use of Concentrators

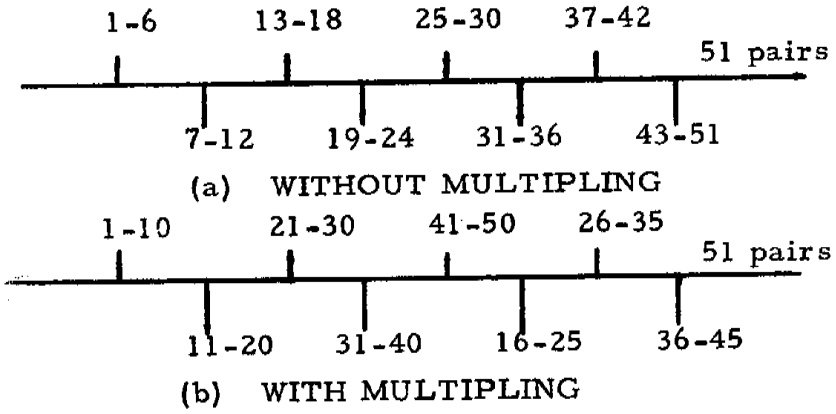

Figure 15-27 - Distribution Cable

Now suppose the growth rate on the cable is not evenly distributed and the first two terminals would like to serve eight houses each but the last six terminals are only serving three houses each. In this case there is an inflexible, inefficient cable plant. All the pairs available

TCI Library: www.telephonecollectors.info

in the cable are not being used and some subscribers cannot be served. This problem can be circumvented by multipling. Multipling is a term used in the cable plant to indicate the repeated or multiple termination of the same cable pairs at more than one location. Multipling is shown in Figure 15-27 (b).

If the growth pattern varies from one area to another, pairs can be borrowed from the slow growth area to fill the needs of the fast growth area. Thus, we have the flexibility to handle eight pairs in the first two terminals and three each in the other terminals.

Multipling serves five general purposes:

1. To make all pairs available for termination where and when they will be needed, thereby minimizing unavailable cable pairs, as these tend to prevent high cable pair utilization.

2. To make the same cable pairs available at a sufficient number of points to:

   a. Provide for possible variations in growth rate with a minimum amount of rearrangement.

   b. Permit a satisfactory party line fill, with party line stations conveniently located geographically.

3. To distribute ultimate loads as evenly as possible throughout the cable.

4. To avoid early congestion of any one terminal.

5. To facilitate splicing, fault location and the clearing of trouble.

15.18 DEDICATED OUTSIDE PLANT

The objective in the design of an exchange cable network is to provide facilities to meet demand, with a minimum of capital investment and future rearrangement and change cost. High party line development, a low percentage of households with service, the relative inflexibility of pulp type cable with hermetically sealed terminals and the difficulty of correctly forecasting the distribution pattern of line demand led originally to the adoption of a highly multipled form of outside plant design.

TCI Library: www.telephonecollectors.info

In recent years the factors enumerated have undergone radical changes.

1. Demand for party line service has been decreasing steadily. As a result of this trend, bridging of party line customers in the field is becoming more difficult and we are gradually approaching the need for a cable pair per main station in the present plant.

2. The percentage of households with service has been rising steadily during the post war period. In many new developments one hundred percent usage is frequently forcast.

3. Color-coded polyethylene insulated conductor (PIC) distribution cable and ready access terminals are now being used in lieu of pulp cable and hermetically sealed terminals. All cable pairs are therefore available for use at every terminal location. Terminal multipling is no longer necessary and the flexibility of the distribution portion of the network is greatly increased.

4. Outside plant forecasts of lines should improve as a result of the decrease in party line demand and the increase in the number of households with service.

Rearrangements and changes are also necessary under a multipled form of design as information regarding the detailed location of growth becomes known. This major item of expense has been rising consistently in the post war period as it is directly related to System growth. Because of customer demand for better grades of service, the high percentage of households with service, recent technological innovations such as "PIC" cable and the rising expense associated with the administration and operation of multipled plant, it now appears to be economically and technically feasible to design plant initially on a more permanent basis.

A. DEDICATED PLANT PLAN

This plan provides for the permanent assignment (dedication) of a cable pair from the central office main frame to a residential or non-key business location, as demand develops, regardless of the class of service. Once dedicated, the pair remains permanently assigned to the

TCI Library: www.telephonecollectors.info

location whether working or idle. The Plan applies to main stations located within a radius of approximately 32,000 feet from the central office. This area contains about 97 percent of the total System main stations. Beyond this point, the added investment in outside plant necessary to provide a separate pair per residential or non-key business location, would probably exceed the operating savings resulting from dedication.

Party line customers, two- and four-party, will be bridged at the central office main frame using bridge lifters (1574A and B Inductors). Two- and four-party line fills of substantially 2.0 and 4.0 respectively are possible under this plan. Fills of this order make maximum use of central office line equipments. They also provide a stimulus for any upgrading program, as all customers will receive grades of service for which they are paying. Fills are defined as the ability to obtain subscribers who want either 2 or 4 party service, and connecting these subscribers to wire pairs so that 2 or 4 parties will utilize that wire pair instead of a lesser amount. This plan also provides for the use of a new approach to the design of new subscriber cable plant, the "Spare Pair Concept." It also recommends the gradual conversion of existing plant to a dedicated status.

This plan provides for the virtual elimination of line and station transfers, essentially all cable pair transfers and central office and drop wire or terminal jumper transfers associated with such activities. Service order assignment will be simplified. Man-made troubles and service order completion intervals will be reduced. Loop transmission will be improved and the installed first cost of new cable plant will also be less in many cases.

1. Line and Station Transfers - Under present operational methods, working party line customers are bridged in the field to minimize the use of feeder facilities. Line and station transfers are made to clear cable pairs to meet new demand or to improve party line fills and line equipment usage. Working main stations are also moved from one cable pair to another to permit transfers between cable complements. Under dedicated plant each party main station will be assigned a separate cable pair and bridging will be done at the central office main frame. A cable pair, once assigned to an address, will remain dedicated to that address and will not be made available for

TCI Library: www.telephonecollectors.info

use at another location even though service may be disconnected at the initial address. Therefore, line and station transfers will be virtually eliminated. Some reassociation of party line customers at the main frame will be required periodically to maintain high party line fills.

2. Cable Pair Transfers are usually made for one of three reasons:

   a. To redistribute existing idle facilities or to distribute new facilities to areas where demand is being experienced.

   b. To transfer customers from one central office area to another or, in the case of large PBX's, from one location to another.

   c. To clear coarse gauge cable for use on longer loops.

It is for (a) that the bulk of the expenditures for cable pair transfers is made and it is in this area that large savings will be derived. Under present design method, cable pairs are multipled over an area to increase the probability of their use. When a cable complement becomes congested, new facilities are made available at a demand location by transferring one of the multipled cable legs to a less congested or new cable complement.

Under the dedicated plant approach, assigned cable pairs, whether working or idle, are not subject to transfer except for reasons cited in (b) and (c) above. Initially only a portion of available cable pairs are spliced through to demand areas, and these on a non-multipled basis. As additional demand becomes apparent, existing unassigned or new cable pairs are made available at demand locations through the use of control points and access points. Thus, cable pairs transfers for normal growth are eliminated.

Spare Pair Concept - This concept suggests a method of designing the customer portion of the exchange cable network which will result in increased flexibility and improved utilization. Essentially, it proposes the allocation of a certain percentage of the pairs available at the central office to demand locations. The remainder are retained as spares in the feeder network and distributed when demand becomes evident. This concept recommends the use of control points and access points to improve plant

TCI Library: www.telephonecollectors.info

availability. Control Points provide a means of distributing spare facilities in main feeders to branch feeders and, between branch feeder cables. Access Points provide a means of connecting pairs in distribution cables to spare pairs in branch feeder cables.

In applying the Spare Pair Concept in the design of cable in a main feeder route, the route is first divided into allocation areas. Pairs are then allocated to each area in proportion to the amount of growth generated in the area. Within each area 70 per cent of the allocated pairs are connected to branch feeders while 30 per cent are retained as common spares. The latter would be connected to branch feeders later as demand, in excess of the initial dedication, is experienced. The percentage allocations shown above for main branch feeders are based on average growth conditions. In rapidly growing routes it may be desirable to increase the percentage connected while in slow growing routes it may be desirable to decrease it. A basic guide in determining the percentage of the allocated pairs to be distributed involves a fundamental rule of the Spare Pair Concept. "Only enough pairs should be allocated to distribution areas to meet clearly indicated demand."

Establishment of Allocation Areas in Main Feeder Cables - The maximum number of branch feeder and direct distribution legs should be included in each allocation area, consistent with bridge tap limitations and loading considerations, so as to make common spares available to the greatest practical number of cable legs. To facilitate the administration of spare pairs, it would appear that the size of the area might be selected so that the maximum allocation will not exceed 1000 pairs. The typical layout shown in Figure 15-28 is divided into three allocation areas. In this case the controlling factor in determining the size of the area is bridged tap.

Allocation of Pairs to Each Allocation Area - The allocation of pairs to each area is made on the basis of the proportionate average rate of growth in pairs per year generated within the area, to the total average rate of growth for the route, as determined at the central office. The number of pairs to be allocated is the total number of new cable pairs and unassigned pairs originating at the central office.

TCI Library: www.telephonecollectors.info

1. Allocations to each area are determined in the following manner:

   $\frac{A}{B} \times C$ = Area allocation in pairs (area allocations should be made to the nearest 50 pairs in main feeder cables of 900 pairs or more and 25 pairs in smaller size cables or branch feeder cables).

   A = Average rate of growth generated in the area in pairs per year.

   B = Average rate of growth for the entire route in pairs per year.

   C = Total number of pairs to be allocated at the central office.

   Pairs to be allocated to Area #1 = $\frac{100}{300} \times 1800$ = 600 pairs

   (see Figure 15-28 for source data).

Although the total pair allocation to each allocation area may be made on the basis of proportionate rates of growth, the number of pairs to be connected to each branch feeder or distribution cable within the area should be based on the actual growth pattern of the branch feeder or distribution cable. This will result in the most efficient administration of spare facilities and maximum cable fills before relief.

For the sample problem it was determined that 600 pairs would be allocated to Allocation Area #1. Seventy per cent (70%) would be connected to branch feeders and thirty per cent (30%) would be retained as spares in the main feeder cable.

Pairs to be connected = 600 x .70 = 420 pairs = 400 pairs (rounded to nearest 50 pairs).

Common spares = 600 - 400 = 200 pairs.

For the sample problem it is assumed that for Allocation Area #1, the forecast of lines indicates that 400 pairs will meet growth requirements for four (4) years. Therefore, a sufficient number of cable pairs should be

TCI Library: www.telephonecollectors.info

NOTES:

1. ALL 26 GAUGE AREA ASSUMED. CABLES SIZED ACCORDING TO AC50.300.
2. MAXIMUM NUMBER OF BRANCH CABLES SHOULD BE INCLUDED IN AN ALLOCATION AREA CONSISTENT WITH BRIDGE TAP LIMITATIONS AND LOADING CONSIDERATIONS. IT WOULD APPEAR THAT THE SIZE OF THE AREA SHOULD BE SELECTED SO THAT THE ALLOCATION WILL NOT EXCEED 1000 PAIRS.

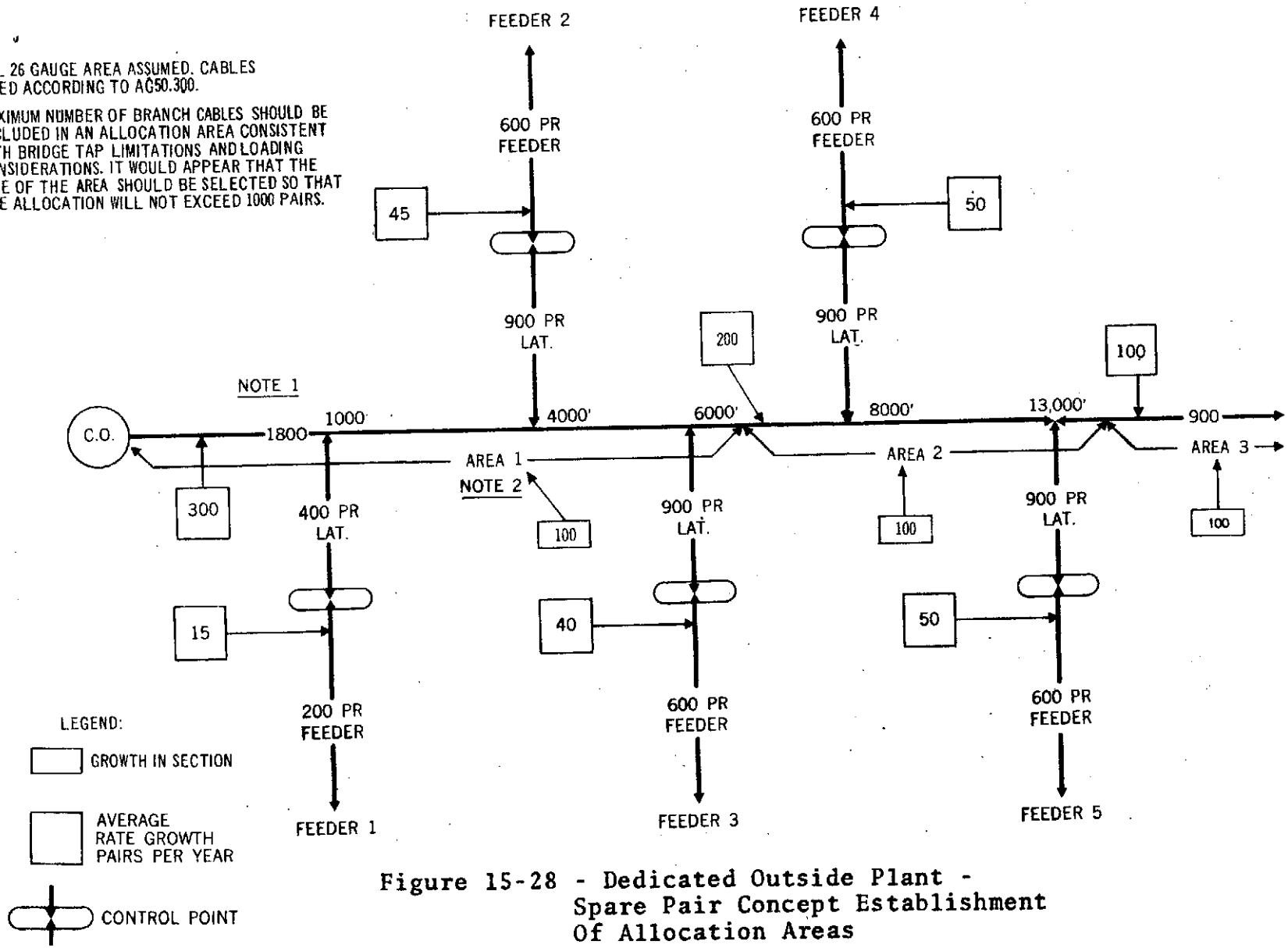

Figure 15-28 - Dedicated Outside Plant - Spare Pair Concept Establishment Of Allocation Areas

TCI Library: www.telephonecollectors.info

connected to each branch feeder cable to meet forecast line growth for a period of four (4) years. In Allocation Area #1, the following allocations are made for illustrative purposes (see Figure 15-29).

	Forecast Requirement 4.0 Years - Pairs	Round to Nearest 50 Pairs
Feeder Cable #1	60	50
Feeder Cable #2	180	200
Feeder Cable #3	160	150
Total	400	400

In Allocation Area #1 200 pairs have been designated as spares in the main feeder. These pairs are made available in control points through the lateral cables. To minimize the number of spare pairs spliced initially and on subsequent relief it is recommended that they be multipled over the lateral cables so that the number made available in any control point will not exceed twice the number of pairs initially connected through the point. For the sample problem:

	Number of Pairs Initially Connected	Number of Spares Made Available
Feeder Cable #1	50	100
Feeder Cable #2	200	200 *
Feeder Cable #3	150	200 *

* Maximum available in Allocation Area #1

Figure 15-29 shows the allocations to each allocation area and a schematic layout of the distribution of the pairs within Allocation Area #1.

15.19 UNIGAUGE CUSTOMER LOOP PLANT

The latest development called the Unigauge Plan, is to provide customer loops with a single, fine-gauge cable and to provide modern electronic equipment when required to maintain good transmission and signaling.

TCI Library: www.telephonecollectors.info

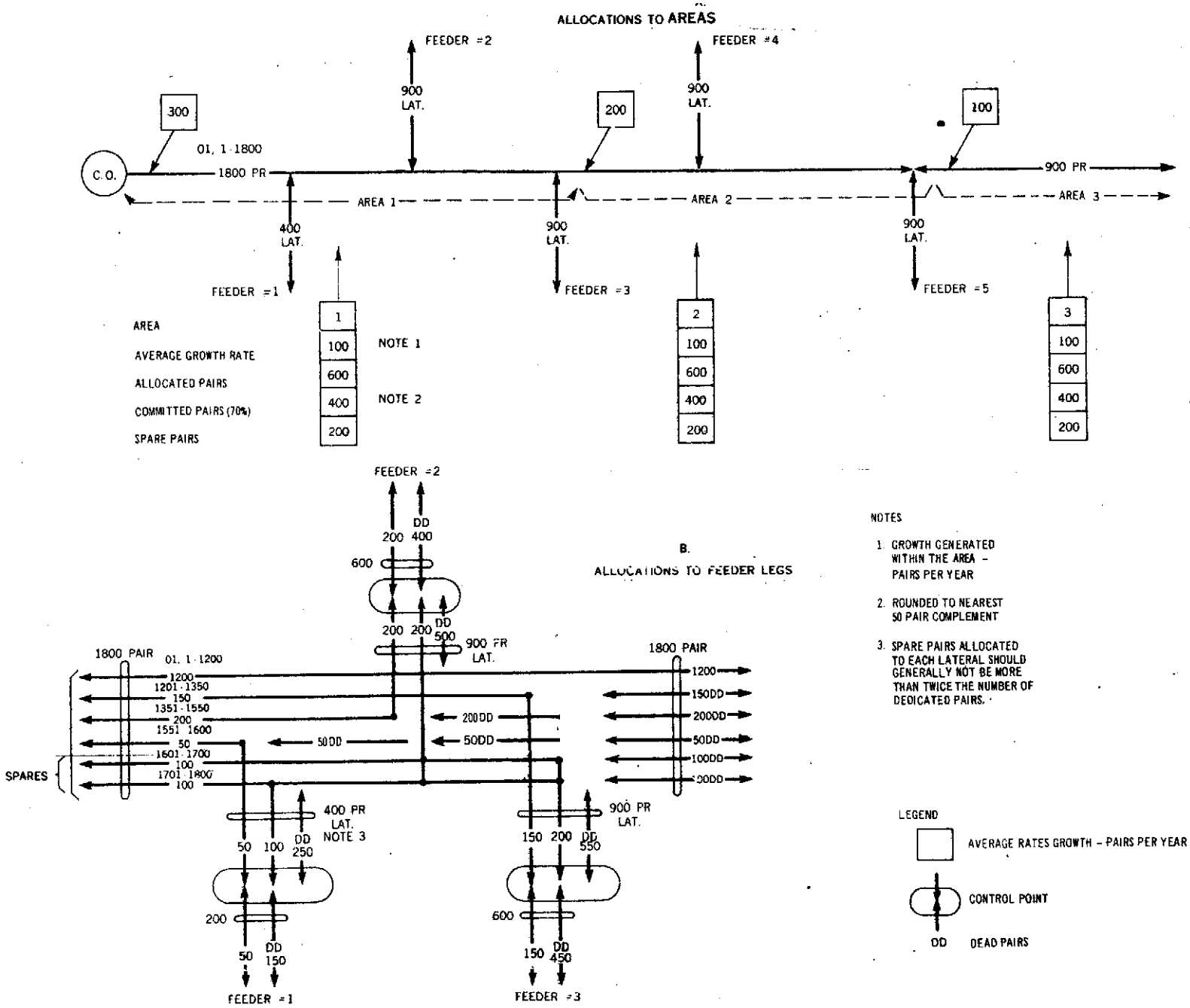

Figure 15-29 - Pair Allocations To Areas and Feeder Legs

TCI Library: www.telephonecollectors.info

Briefly, new loops as long as 30,000 feet will be entirely 26 gauge, the amount of inductive loading will be drastically reduced and the resulting increased resistance and transmission impairment of the longer loops will be compensated for by repeaters and signaling range extenders in the central office. Transmission is estimated to be comparable to that in the present plant and capital savings for the 1970-75 periods are estimated to be $44 million per year. These savings are based on the assumption that all growth of loops over 15,000 feet in No. 5 Crossbar and ESS wire centers will be developed by Unigauge plant.

Most of the present plant has been developed under the loop resistance design rules. The important resistance design rules are that customer loops are developed with a maximum conductor resistance of 1,300 ohms and that all loops over 18,000 feet are equipped with 88 mh loading coils at 6,000 foot intervals (H88 loading). Three gauges of cable (22, 24 and 26) are used for nearly all loops within the 30,000 feet range, but the cable may occasionally be extended by 19-gauge cable or various open or buried wires. The gauges are chosen to use the minimum copper while keeping within the 1,300 ohm limit.

The chart in Figure 15-30 illustrates how the various gauges of cable are combined theoretically to provide good transmission with minimum plant investment. Customers within 15,000 feet of the office can be served with all 26-gauge nonloaded cable. Those between 15 and 18,000 feet can be served with loops made up partly of 26 gauge and partly of 24 gauge. Beyond 18,000 feet inductive loading must be added. The longer the loop the coarser the gauge so that customers between 40 and 50,000 feet for instance, must be served with combinations of 19 and 22 gauge. The width of the lines in Figure 15-30 indicates the relative copper content of the various gauges. For example, a unit length of 19 gauge contains five times as much copper as the same length of 26 gauge.

The Unigauge plan is designed primarily for single-party and 2-party lines, and initially for No. 5 Crossbar and on a 1970 basis for ESS central offices. Coin, PBX, 4 and 8 party, and special service lines can be handled, however, the loop resistance limit will be reached in a shorter geographical distance on 26 gauge than on coarser gauge facilities. When this resistance limit is exceeded, modifications may be required; these will be discussed later. Standard station sets are used on all lines.

TCI Library: www.telephonecollectors.info

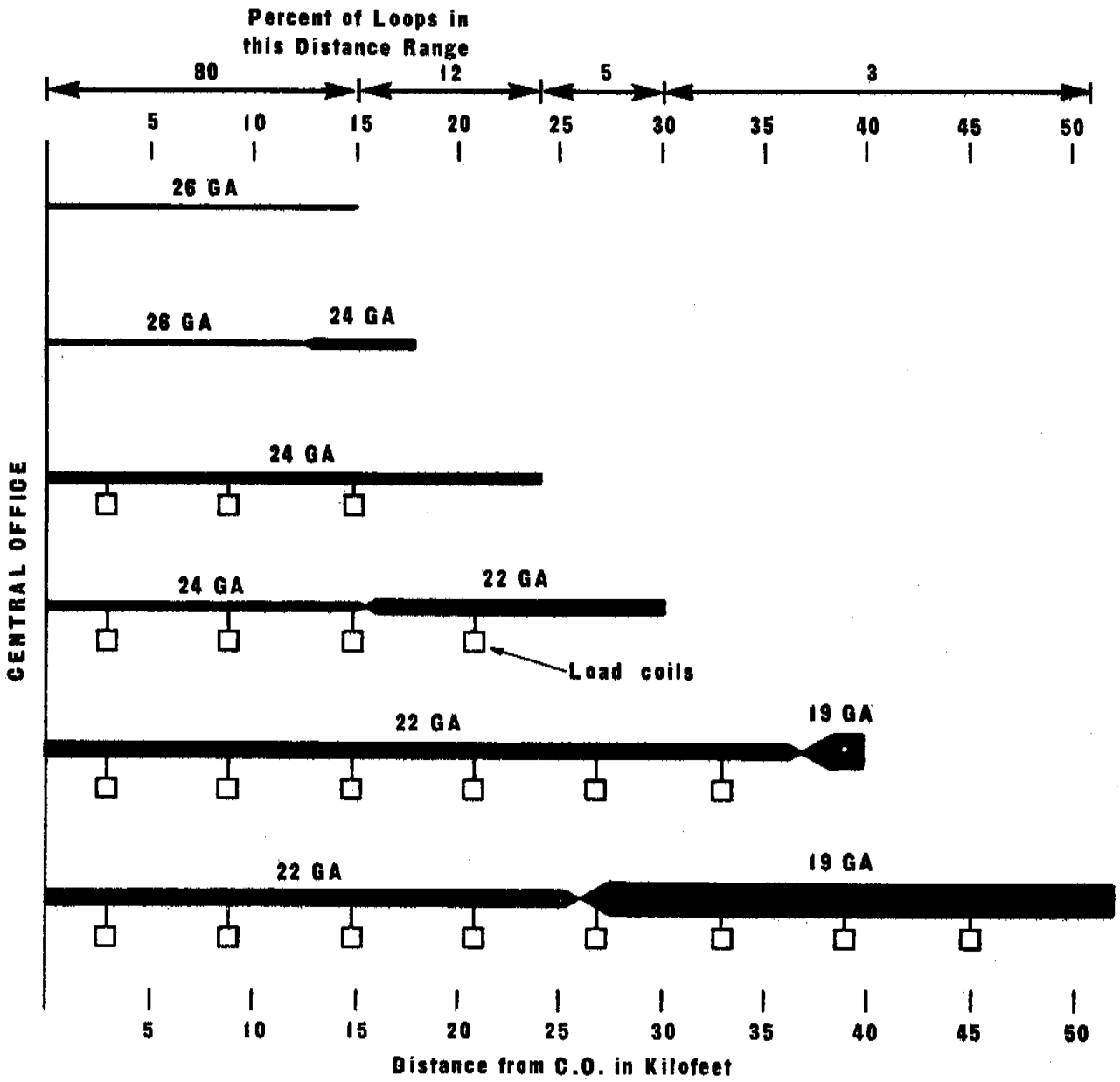

Figure 15-30 - Cable Plant Gauge Composition Resistance Design

TCI Library: www.telephonecollectors.info

Line diagrams of loops developed under the plan are shown in Figure 15-31. Stations within 15,000 feet of the office are served over loops of 26-gauge non-loaded cable with 48 volt battery and conventional equipment in the central office. This is identical with their treatment under theoretical resistance design rules. This length range includes 79.5 per cent of all main stations. Stations in the 15 to 24,000 feet range are also served over 26-gauge non-loaded cable but they require a range extender and amplifier in the central office. This range extender provides 72 volts for signaling and talking and 5 db midband gain for speech. Higher gain is provided at the higher frequencies to compensate for the frequency distortion in the long non-loaded loops. This gain is not sufficient for NL loops longer than 24,000 feet but satisfactory transmission is obtained on loops as long as 30,000 feet by adding 88 mh load coils at the 15 and 21,000 feet points. No loading coils are permitted closer to the office than 1,500 feet. All Unigauge loops, thus, have at least 1,500 feet of 26-gauge non-loaded cable adjacent to the office. This makes their input impedance uniform and allows all Unigauge repeaters to be alike and non-adjustable without degrading the office balance. They therefore, do not need to be provided on a one-per-line basis but may be switched in when needed. A four-or five-to-one concentration ratio of lines to range extenders is practical. This is of vital importance to Unigauge economics.

Thirty thousand feet is the limit of the strictly Unigauge (i.e., all 26 gauge) loop plant but many of the Unigauge features may be applied to many of the loops serving the 3.25 per cent of the main stations that are more than 30,000 feet from the office. This is illustrated by the bottom line diagram in Figure 15-31 Central office equipment and the adjacent 15,000 feet of loop are identical with Unigauge loops. Beyond 15,000 feet, 22 gauge H88 loaded cable is used. Using this method, loops as long as 52,000 feet may be handled in the central office as though they were Unigauge loops. Remote Message and Signal Repeaters may be used to further extend these ranges. Under this combined standard and Extended Uniguage plan, about 65 per cent of the load coils required for resistance design are eliminated and among these are 85 per cent of the coils located in manholes where they are becoming difficult to install and service.

TCI Library: www.telephonecollectors.info

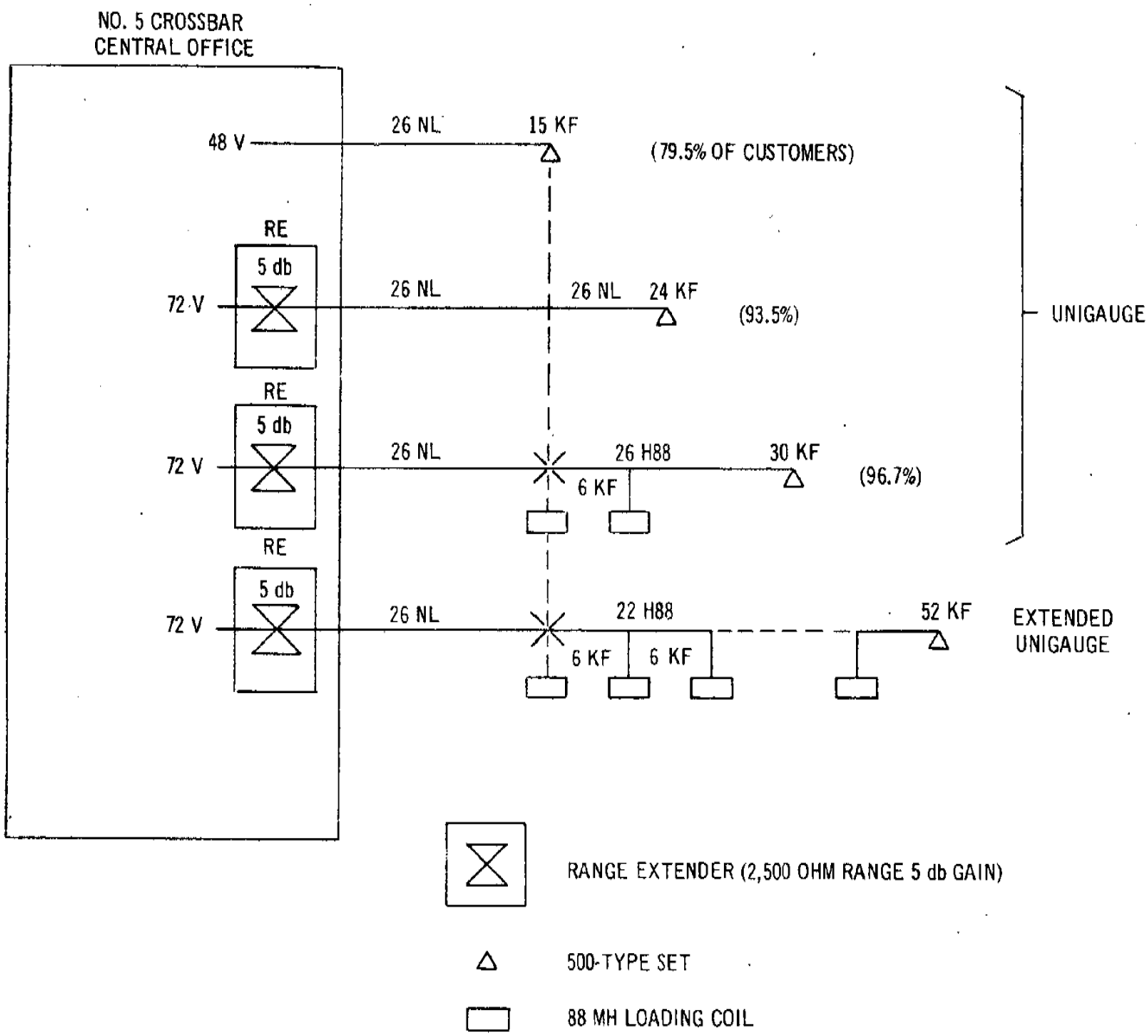

Figure 15-31 - Uniform Gauge Loop Plant Layout

TCI Library: www.telephonecollectors.info

Savings in the cost of outside plant are thus obtained from a number of factors. These include:

1. Reduced cable costs - less copper
2. Fewer load coils
3. Higher average route fills - only one type of facility
4. Reduced expense for rearrangement and changes for gauge recovery
5. More efficient use of underground conduit systems
6. Less cable maintenance - fewer sheaths - less sheath footage
7. Simplified outside plant engineering
8. Reduced inventory and supply expense

Two-party lines require extra attention. The central office equipment must be capable of selective ringing and party identification. On any one line, both parties must be in the 0-15,000 foot range or in the 15-30,000 foot range. Under 15,000 feet loop stations cannot be paired with longer loop stations. This is not a serious restriction because, with dedicated plant, the parties will be bridged at the central office and may therefore be located on any of the cable routes running out of the office. Central office bridging radically changes the input impedance of the loop and, if not corrected, will cause the Unigauge repeater to sing. Conventional bridge lifters (1574-type inductors), that will continue to be used on the short loops, are not adequate for repeated loops because, even when saturated, they will have enough residual inductance to upset the balance. There may be occasions when both parties are off-hook with both inductors in their low impedance state. A satisfactory solution to this problem is to bridge a shunt negative impedance converter on the long lines at the main frame. The circuit is shown in the upper line diagram of Figure 15-32. This converter neutralizes the impedance of one of the loops and makes the impedance of the bridged line substantially the same as that of a single-party loop. The converters are all alike and are not adjustable.

TCI Library: www.telephonecollectors.info

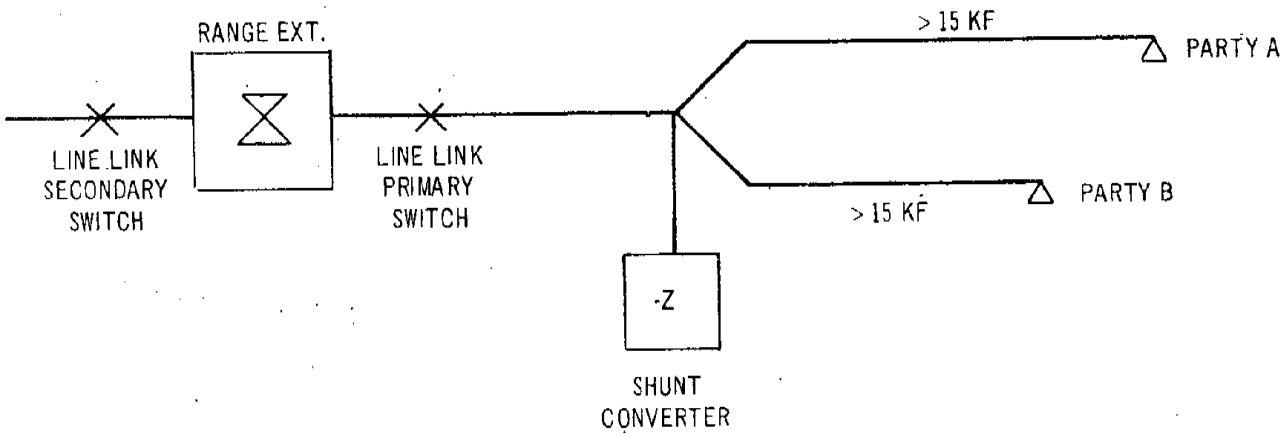

Figure 15-32 - 2-Party Lines

During reverting calls the transmission loss between stations on long 2-party loops will be greater than normal since the bridge at the main frame bypasses the two Unigauge repeaters that would be connected in series on an intraoffice call between these locations. However, the shunt converter compensates for some of this extra loss. Transmission will be acceptable in most cases and if not, some reassignment of parties may be required to avoid community of interest and consequent reverting calls.

Coin lines and 4 or 8-party lines cannot be served at present by the Unigauge range extenders. If they are beyond limits with the Unigauge plant available, they must be handled by standard E-type repeaters and dial long line circuits on a one-per-line basis unless coarse gauge cable is available.

Many of the special services will fall within ranges in the Unigauge plan in which they will meet the objectives specified in Bell System Practices. In fact, assignment of some PBX and other special service lines to Unigauge equipment will provide a more convenient and economical method for meeting objectives than is available today. Longer special service line and PBX trunks will require individual design and treatment. In general, non-switched lines to 24,000 feet and switched lines to 15,000 feet can be cared for with Unigauge equipment. Beyond these distances individual design and treatment is required. In some cases four wire techniques will be required.

TCI Library: www.telephonecollectors.info

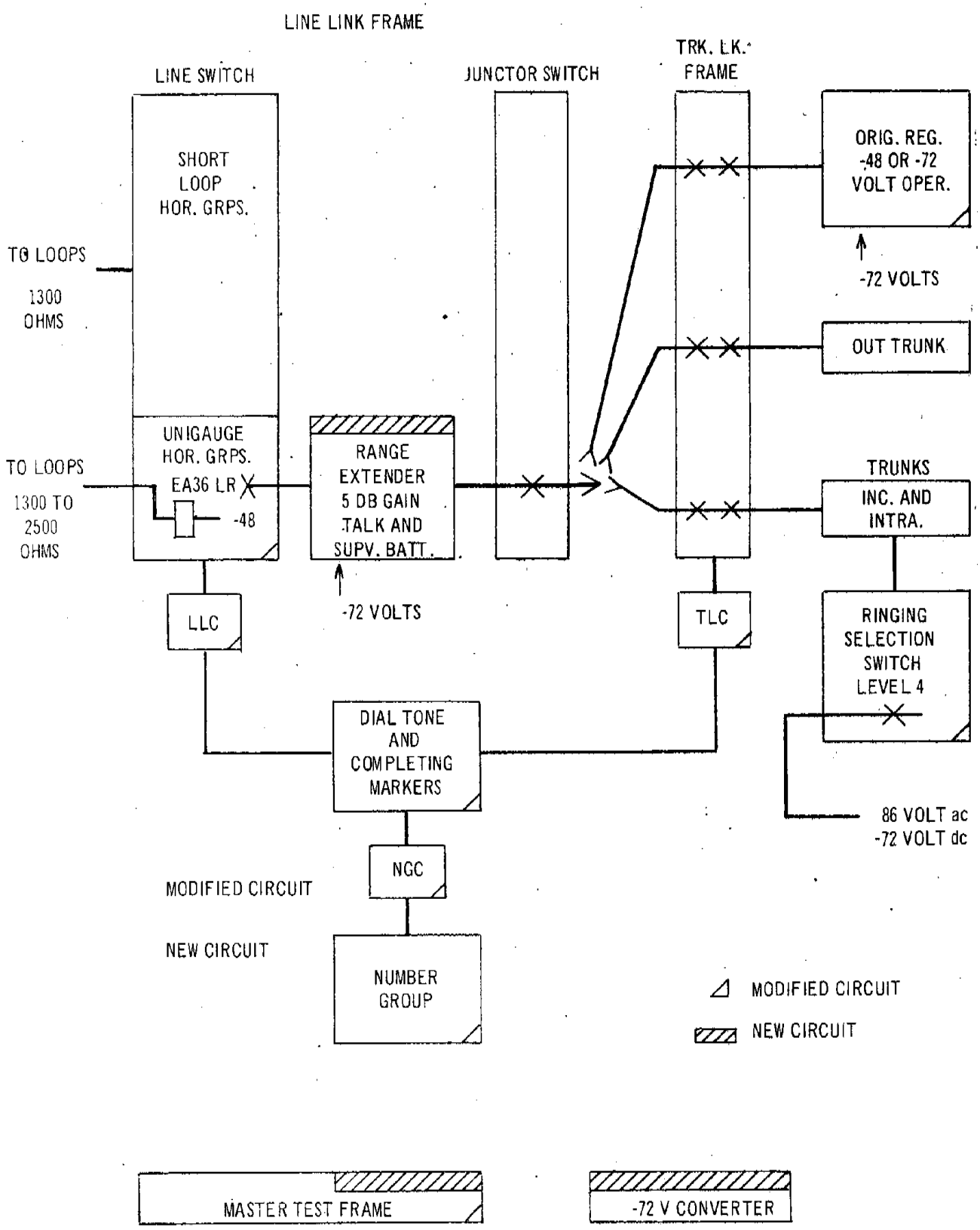

Figure 15-33 - Unigauge No. 5 Crossbar Switching Plan

TCI Library: www.telephonecollectors.info

Although Figure 15-33 is not involved with outside plant it is presented to show the modifications of No. 5 Crossbar office for Unigauge.

Arrangements for serving Unigauge loops from No. 1 ESS offices are not as far advanced as they are for No. 5 Crossbar but are developing along similar lines. It is expected that range extenders will cut into the B links when needed by command from the stored program control. The repeaters will probably be electrically identical with those developed for crossbar offices but their equipment design may differ.

Less work has been done on No. 2 ESS offices but it is expected that they will handle Unigauge loops in a manner quite similar to No. 1 ESS.

Satisfactory arrangements have not yet been found for step-by-step offices. It appears that Unigauge equipment costs will be higher than in crossbar or ESS offices because separate originating and terminating switch trains are used in step-by-step offices.

There is no intention of adapting panel or No. 1 Crossbar offices to Unigauge since no new offices of these types are being built and the existing ones are located in cities where few loops exceed 15,000 feet.

TCI Library: www.telephonecollectors.info

CHAPTER 16

CARRIER SYSTEMS

16.1 INTRODUCTION

In the early history of the telephone system one of the major transmission problems was the struggle for distance. As telephone lines became longer and longer a serious technical limitation became more and more apparent. This was the progressive weakening of the speech currents as the distance increased. The principle of inductive loading helped extend distance but there still remained definite limits of practical telephony. These limits were overcome with the dawn of the electronic era, in which the vacuum tube made it possible to stretch the range of telephony to unlimited distances by wire and radio. The application of the vacuum tube to telephone repeaters made it possible to compensate for loss of signal strength by amplifier gain.

When vacuum tubes made amplification available for application to telephone lines, research was aimed at utilizing these lines more efficiently. The outcome of this research was a powerful new transmission method - the application of the carrier principle to wire lines. The method is to convert the audible frequencies of a communication channel to a corresponding band of frequencies centered about, or otherwise related to a particular frequency beyond the audible range, known as a carrier frequency. By suitably spacing such carrier frequencies over a comparatively wide range, several communication channels may be combined to transmit signals or voice over a single pair of wires, without interference from one channel to another.

The next two chapters will be devoted to the systems which were developed from these transmission improvements - namely the carrier system and the repeater. The discussion on repeaters will be limited to voice frequency repeaters. Carrier systems also make use of repeaters but these will be considered as an integral part of each system.

Before beginning this discussion, however, it is advisable to define several common transmission terms.

<u>Voice Frequency Systems</u> - Systems which transmit intelligence over lines at frequencies which fall within the useful portion of the audible spectrum; in general, the frequencies are between 200 and 4000 Hz.

TCI Library: www.telephonecollectors.info

Carrier Systems - Systems which employ some form of modulation at each end of the circuit, so that the signal is transmitted at frequencies above the principle audible range.

Two-Wire Operation - By its basic nature a telephone conversation requires transmissions in both directions between the customers at opposite ends of a transmission system. In the early days of telephony, most transmissions were made over paired conductors (or wires) and the transmissions in opposite directions used the same electrical path between the customers. At switching points the two transmission path terminals of one circuit were connected through cord circuits or switching mechanisms to the two transmission path terminals of a similar circuit. This method of transmission and switching was therefore designated as two-wire operation.

Thus by definition, transmission and switching operations are "two-wire" when oppositely directed portions of a single conversation occur over the same electrical transmission path or channel.

Four-Wire Operation - When carrier system operation was introduced into the open wire plant and circuits of increasingly greater length were routed in cable plant, echo and singing considerations made it necessary to separate the electrical paths used for oppositely directed transmissions between the customers involved in a single conversation. This separation is accomplished by either or both of two methods, as follows:

a. Separate pairs in outside plant and office cabling

b. Separate carrier frequency bands.

In the larger intertoll switching mechanisms used today such separation is also maintained through the switches.

Because two separate pairs (or 4 wires) were used for the oppositely directed transmission paths of many of the longer voice-frequency circuits in cable, circuits operated in this manner were designated as Four-Wire circuits.

Thus, by definition, transmission and switching operations are Four-Wire when the oppositely directed portions of a single conversation are routed over separate electrical transmission paths or channels.

TCI Library: www.telephonecollectors.info

A distinction is sometimes made between the two methods of four-wire operation. Systems using the same frequency band in two separate paths for the two directions are said to give "real four-wire operation"; those using two frequency bands over a single path are said to provide "equivalent four-wire operation."

16.2 GENERAL

In the early days of telephone communication, speech was transmitted over the wirelines only at its natural voice frequencies. It was soon realized, however, that this was a very inefficient use of the costly wire plant, since the lines are capable of transmitting a much wider frequency band than the 3KHz or so required by speech. The incentive was strong for developing systems which could utilize some of the wasted frequency band above 3 KHz to provide additional telephone channels. The advent of the electron tube provided the needed tool for such a development, and the first carrier system made its appearance during World War I. This system, designated type "A", is now obsolete, and has been followed by a succession of carrier systems designated by the letters of the alphabet, which are briefly described in this chapter.

All of the carrier systems, except the type "L" which requires coaxial cables or microwave radio systems, were designed to be applicable to one or more of the already existing types of line facilities. The application of a carrier system to a line requires the addition of carrier terminals and repeaters, and frequently also, special treatment of the line itself such as the carrier transposing of open-wire lines or the balancing of cables. The cost of this equipment and line treatment therefore represents the cost of the telephone channels furnished by the carrier system.

A carrier system would not be used unless it proved in economically. For a carrier system to prove in, the cost of obtaining additional telephone channels by means of the carrier system must be less than the cost of obtaining the same number of channels on that route by other means, such as stringing new wires or cables and equipping them with voice frequency systems. An important part of the cost of carrier systems is the cost of the terminals. This is a fixed cost per system regardless of its length, for a particular type of system. When expressed in terms of cost per mile, it looms up as a much larger part of the total cost on short than on long systems. It follows that for

TCI Library: www.telephonecollectors.info

each type of carrier system, there is some minimum length of system below which the carrier costs per telephone channel mile are so great that the system does not prove in, and it is more economical to obtain the telephone channels by other means. The fact that carrier systems have tended to prove in more naturally and by larger margins on long than on short circuits, has had a large effect on the engineering of the telephone plant. This effect has been to drive voice-frequency systems out of the long toll circuit field and to relegate them more and more to the shorter circuits which feed the main toll routes. Today, practically all circuits over 50 miles long and many shorter ones, are carrier circuits. The trend toward the use of carrier for long circuits receives added impetus from the fact that better transmission performance can be obtained from long carrier systems than from long voice-frequency systems.

The carrier systems are classified as "long haul" and "short haul" systems. The long haul systems are designed to meet all the transmission requirements of a toll link, for the longest systems which would be encountered in the United States, 2000 to 4000 miles. The minimum length for which most of the long haul systems prove in is usually of the order of 75 to 100 miles. The short haul systems have the specific purpose of extending the carrier applications to shorter distances, some of them proving in at as short a length as 10 to 15 miles. This result is attained by reducing the cost of the terminal and line equipment, which is made possible by lightening the transmission requirements in view of the shorter distances to be spanned. Consequently, for the short-haul systems there is not only a minimum length at which the system proves in but also a maximum length beyond which the transmission requirements of toll links will not be met.

It is evident that the carrier systems increase the efficiency of use of the wire lines by the principle of superimposition. That is, they add additional speech channels to the line, each utilizing an otherwise unused part of the frequency band. For example, when a type "C" carrier system is added to an open-wire pair, three additional 2-way telephone channels are superimposed above the regular voice-frequency channel, using frequencies up to about 30 KHz. To the same pair can be further added a type "J" carrier system furnishing twelve more channels in the frequencies between about 36 and 143 KHz. When both systems are used, the open-wire pair furnishes sixteen two-way

TCI Library: www.telephonecollectors.info

toll telephone circuits. The stacking of channels one above the other with different carrier frequencies is known as frequency division multiplex.

Following World War II, a new concept of telephone multiplex was introduced. This culmunated in the development of the T1 carrier system for wire lines. In this system, the telephone signals are transmitted by means of a series of pulses of energy. The conversion of the telephone signal into energy pulses from which it can be reproduced at the receiving end is known as pulse modulation. It makes possible the transmission of a number of separate signals over a wire line or by a single radio carrier by means of time division multiplex. This is, the intervals between the successive pulses of a given signal can be employed to transmit comparable pulses of other signals.

16.3 FUNDAMENTALS OF CARRIER TELEPHONE SYSTEMS

In ordinary telephone transmission a pair of wires between telephone subscribers ordinarily carries one conversation and is required to transmit intelligence or voice frequency energy in both directions. In other words, we speak and hear over the same pair. This is called a two-wire system and is possible because of the circuit arrangement of the subscribers instrument, see Figure 16-1.

If we attempt to use one pair for more than one conversation at one time, we succeed only in making a four person conference out of it in which each person can hear everything everyone else says. Adding more instruments only adds more confusion, see Figure 16-2.

Changing to a four-wire system has definite advantages in carrier telephony. Since we are developing a simple carrier system, we will convert our circuit to "four-wire." This simply means that when A talks to B, one pair is used. When B talks to A, a different pair is used. Even with our simple telephone circuit the confusion has been reduced somewhat since now only two receivers can be actuated by any one transmitter, see Figure 16-3.

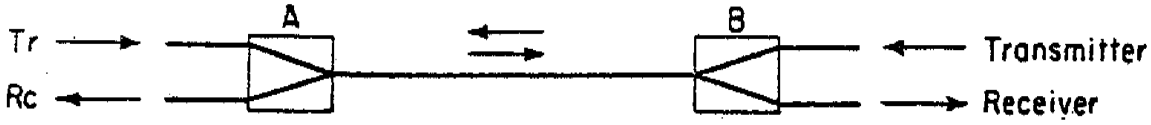

Figure 16-1 Two Wire System (One Conversation)

TCI Library: www.telephonecollectors.info

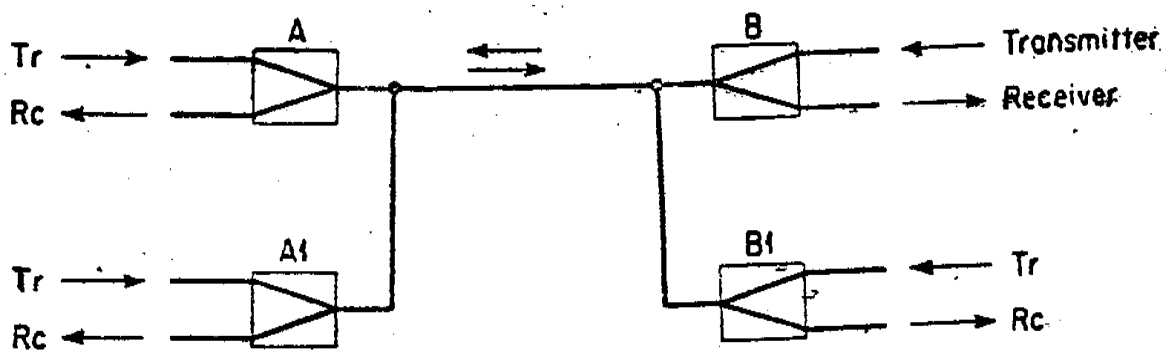

Figure 16-2 Two Wire System (Two Conversations)

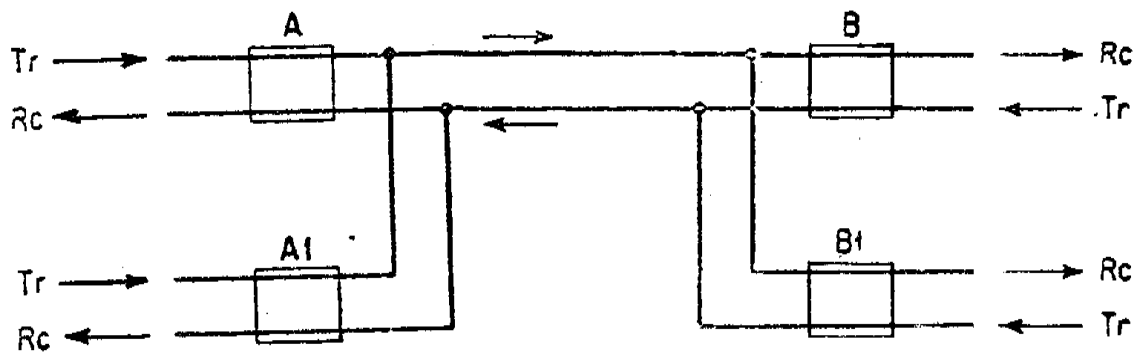

Figure 16-3 4 Wire System

Speech transmitted over telephone lines, generally speaking, is in the range of 200 to 3500 Hz. If we can change the frequency range of the speech of customers A1 and B1 from the 200 to 3500 Hz range to a range of, say 4200 to 7500 Hz and, further, arrange to separate the A-B from the A1-B1 conversations at the receiving ends of the circuit, we can use two pairs of wires for two separate conversations or even more with a saving in plant investment. This is the beginning of a carrier system, see Figure 16-4.

Carrier telephony consists of superimposing voice frequencies on a carrier frequency and then transmitting this information to a point where the reverse will occur. The full range of voice frequencies is 50 to 8000 Hz or higher. For telephone use a range of 200 to 3500 Hz is

TCI Library: www.telephonecollectors.info

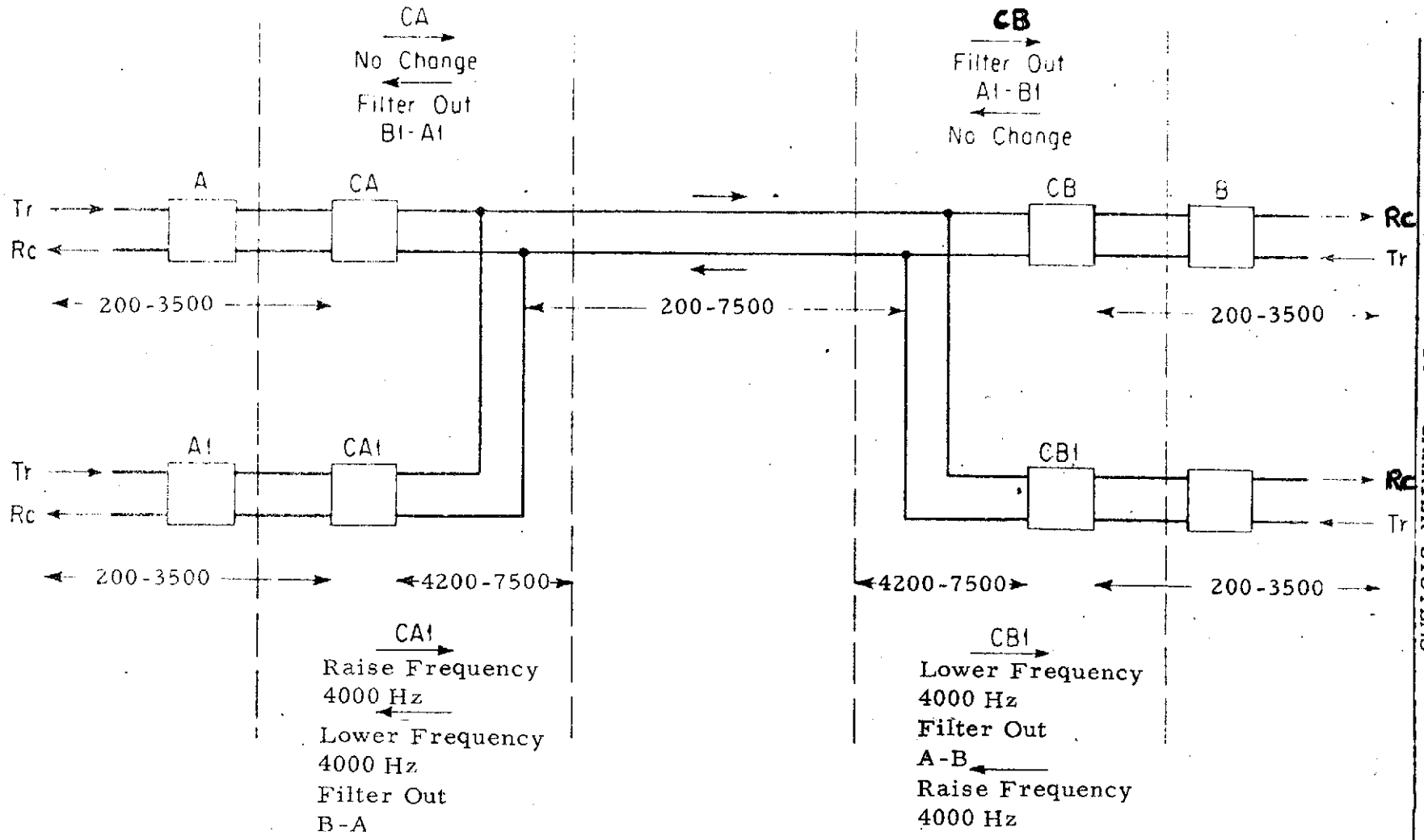

Figure 16-4 Simplified Carrier System

TCI Library: www.telephonecollectors.info

sufficient. This range will allow one subscriber to identify any other subscriber. The carrier frequencies are steady frequencies other than voice frequencies, usually higher than the voice range. Superimposing is accomplished by modulation.

16.4 AMPLITUDE MODULATION

The type of modulation employed in the majority of the systems is that known as amplitude modulation (AM). As shown later, when the amplitude of a carrier wave is modulated by a signal, the result is a wave composed of the carrier frequency plus an upper and a lower sideband which differ from the carrier by the frequency of the signal. It is evident that the two sidebands are redundant, since they both contain all of the intelligence of the signal, and that the carrier is superfluous, carrying no intelligence at all. Therefore in most of the multichannel systems, maximum efficiency is attained by removing the carrier and one sideband by means of filters, and transmitting only the other sideband. However, in certain of the systems where economy is a main object, both of the sidebands and also the carrier are transmitted.

When single-sideband transmission is employed, it is evident that the carrier signal in a given channel has the same bandwidth as the original voice-frequency channel. The single sidebands corresponding to the different telephone channels handled by the system are usually placed in adjacent positions in the carrier frequency band, one every 4 KHz. With modern filters this permits a useful band for each channel which is somewhat wider than 3 KHz.

When the voice frequency is superimposed or impressed on the carrier frequency by amplitude modulation there is obtained, among other things, the sum and the difference of the two frequencies. For example if we let:

V = voice frequency
C = carrier frequency

Then the results of modulation may be expressed in the basic formula:

$$C \pm V = \text{frequency output.}$$

TCI Library: www.telephonecollectors.info

Using the voice frequency band 200 to 3500 Hz and assuming a carrier frequency of 7000 Hz:

$$C + V = 7000 + (200 \text{ to } 3500) = 7200 \text{ to } 10{,}500$$
$$C - V = 7000 - (200 \text{ to } 3500) = 3500 \text{ to } 6{,}800$$

The band of C + V is called the upper sideband and the band of C - V is called the lower sideband. A reverse process is necessary to regain the original voice frequency band. This is known as demodulation.

16.5 FREQUENCY MODULATION

The use of frequency modulation (FM) is confined entirely to radio systems operating in the very high frequency band or above, where it has certain definite advantages over amplitude modulation in minimizing interference from "static" and extraneous signals. It depends upon varying the frequency of a carrier wave of fixed amplitude above and below a central or normal frequency in accordance with the amplitude variations of an applied signal voltage. The process is roughly illustrated by the wave diagrams of Figure 16-5. The amount of frequency change that is produced by the signal is called the frequency deviation and, ideally, this should be as high as possible in order to obtain the maximum signal to noise ratio. However, since it is obvious that the total bandwidth of the modulated wave to be transmitted will increase with increases in the maximum frequency deviations on both sides of the unmodulated carrier frequency, it is necessary as a practical matter to arbitrarily limit the maximum permissible deviations to values that will keep the total bandwidth that must be assigned in the radio spectrum to each FM channel as narrow as feasible. The maximum permissible deviation has been specified by the Federal Communications Commission at 75 KHz for FM broadcasting, and at 15 KHz for such applications as mobile radio service.

As in amplitude modulation, frequency modulation results in a modulated wave containing the carrier frequency and other frequencies above and below the carrier frequency.

In addition to the carrier frequency itself, the modulated wave includes an infinite series of side frequencies having values equal to the carrier frequency plus and minus the signal frequency and all of its integral multiples.

TCI Library: www.telephonecollectors.info

The following three statements can be listed as specifications of FM:

a. The amplitude of the carrier remains constant as the carrier frequency is varied by modulation.

b. Deviation (i.e., frequency swing) is proportional to the amplitude of the modulation. Maximum deviations occurs at peaks of audio signal.

c. The rate of frequency change is proportional to the frequency of the modulation.

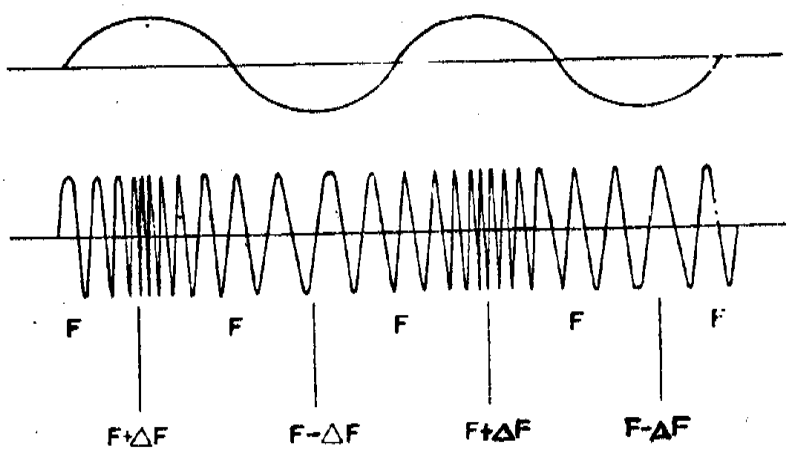

Figure 16-5 Frequency Modulation of Carrier Wave

16.6 PULSE CODE MODULATION

In amplitude or frequency modulation, the amplitude or frequency of a sinusoidal carrier is continuously varied in accordance with the modulating function. In contrast with this, pulse code modulation uses a series of pulses instead of a sinusoidal carrier to carry the information contained in the modulating function.

In the operation of this new type of modulation the voice signal applied to each channel is in effect, transmitted sample by sample. Instantaneous samples of the signal voltage are taken at intervals sufficiently close together to permit a receiver to produce a faithful reproduction of the original signal. Sampling takes place at a rate which is slightly higher than twice the highest frequency component of the signal.

TCI Library: www.telephonecollectors.info

These samples must be coded into a series of on or off pulses. The amplitude of the basic signal being sampled, however, may vary continuously over a wide range and may thus have an infinite number of values. The specific samples approximate the actual voltage of the signal. To keep the total number of codes within reasonable limits, it is necessary to divide the total amplitude range of the signal into a number of finite steps or quanta. Each sample is quantized, that is, it is assigned a specific voltage value between specific limits. The sample is in effect scaled off against some known yardstick and given a definite value. It has been found that when as many as 128 quantum steps are employed, speech signals can be reproduced with a high degree of fidelity. The amount of error between the actual amplitude of the sample and its assigned quanta level gives rise to the term quantizing noise.

These specific voltages are then coded into a binary pulse code. In a binary or off-or-on system 128 separate codes require the use of seven positions or "bits" per code.

At the receiving end each 7-element code signal is translated into the single amplitude pulse which the code represents. The successive amplitude pulses are then applied to a low pass filter (cutting off at 4000 Hz in the case of a voice wave) the output of which will be an exact copy of the original wave sent. Figure 16.6 is a simplified sketch of the pulse code modulation principle.

There is an optimum rate for the transmission of short pulses through a band-limited medium. For a low pass characteristic which transmits up to some frequency f_1 Hz, $2f_1$ pulses per second can be sent. Thus a 750 KHz channel could carry 1.5 million pulses per second. Consider the transmission of 4 KHz telephone messages by 8 digit* binary PCM over a channel which has a bandwidth of 750 KHz.

It was previously seen that our sampling rate should be 8,000 times per second or one sample per 125 microseconds. Each sample will result in one code character consisting of eight code elements (1's or 0's). If we can send 1.5 million pulses per second, eight pulses can be sent in 5.33 microseconds. If only the information pertaining to one message is sent, the pulse pattern vs time would consist of an

*Actually it is assumed that seven digits represents the message sample, and the eighth pulse is for supervisory and signalling purposes.

TCI Library: www.telephonecollectors.info

8-pulse character, taking 5.33 microseconds, then idle time for about 120 microseconds, followed by another 5.33 microseconds of use, and so on. Obviously, the channel is not used very efficiently. On the other hand, if code characters from other channels are sent during the idle time, not one, but about 24 telephone messages could be transmitted over our 750 KHz channel. Interleaving signals on a time basis in this way is called <u>time division multiplex</u>.

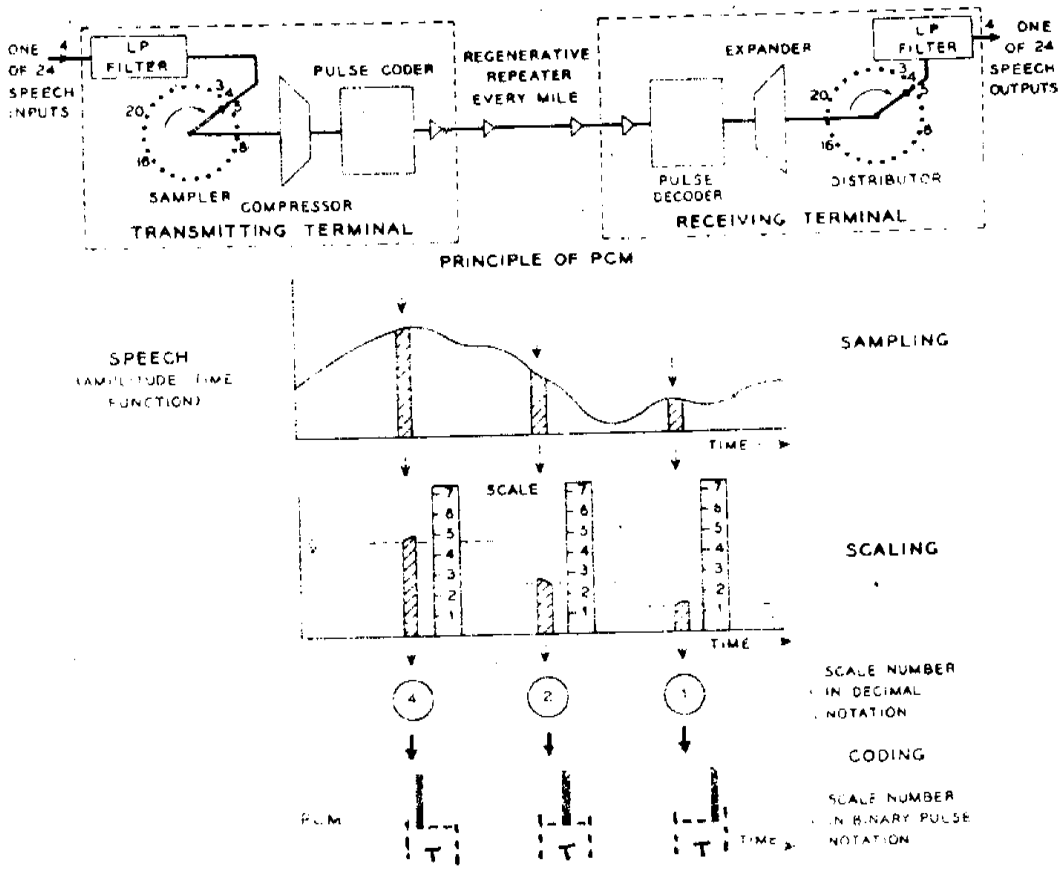

Figure 16-6 Pulse Code Modulation

TCI Library: www.telephonecollectors.info

16.7 A TYPICAL CARRIER SYSTEM TERMINAL

As was stated before, the majority of the Bell System carrier systems make use of amplitude modulation. In developing a typical terminal, therefore, discussion shall be limited to this type of system. In Figure 16-4 additional equipment designated C was added to devise an arrangement by which subscribers A and B may talk to each other without interfering with or being interfered with by two other subscribers A1 and B1. They are the carrier components. The blocks designated C are the filters, modulators and demodulators required in a carrier system.

A carrier terminal Figure 16-7 may be divided into three portions, the voice frequency, transmitting and receiving portion.

In the voice frequency portion the low pass filter (V) allows the voice frequency channel to pass through but blocks the carrier frequencies. The high pass filter lets carrier frequencies into carrier equipment while it blocks out the voice frequencies. This path is established for one message circuit, receiving and transmitting.

In the transmitting portion of Figure 16-7 the voice frequencies from the subscriber are directed into the transmitting portion of the carrier channel by the hybrid coil. The low pass filter (T) eliminates any undesirable frequencies outside of the voice frequency band 200 to 3500 Hz. The oscillator produces the carrier frequency. Each terminal has its own oscillator. The modulator impresses the voice frequency band on the carrier frequency and produces the upper and lower sidebands. In most carrier systems only one sideband is transmitted and this is called Single Side Band transmission. The band pass filter removes all frequencies except one of the sidebands. The transmitting amplifier steps up the sideband being transmitted to the desired power level for transmission. The function of the transmitting directional filter is to keep the frequencies being received from coming into the plate circuit of the transmitting amplifier. This establishes the transmitting circuit.

In the receiving portion of the carrier terminal, the receiving directional filter blocks out the frequencies of the sideband being transmitted but allows the sideband being received to enter the receiving circuit. As the transmitted sideband is conducted to the receiver via the transmission

TCI Library: www.telephonecollectors.info

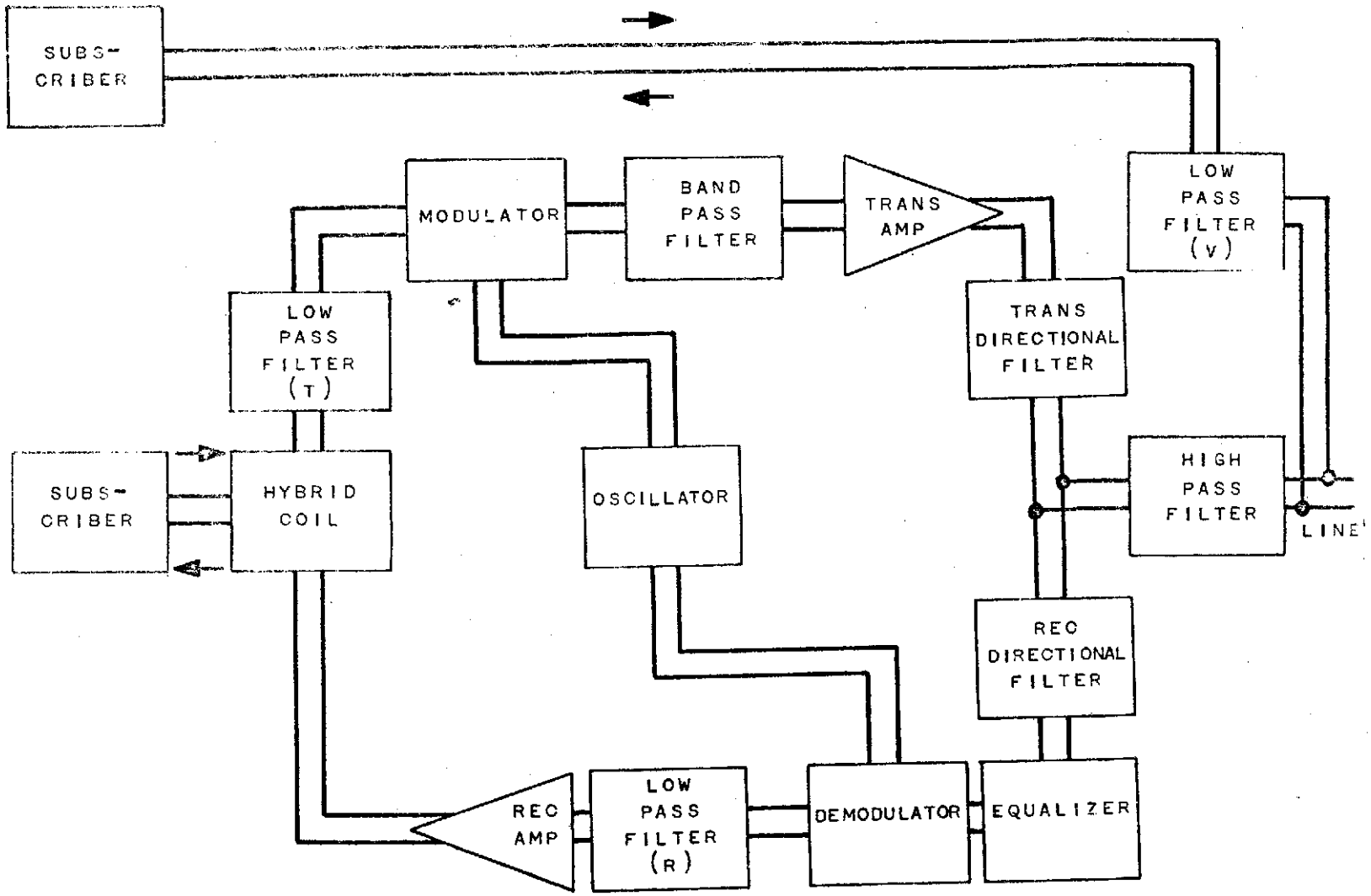

TYPICAL SINGLE CHANNEL CARRIER TERMINAL

Figure 16-7

TCI Library: www.telephonecollectors.info

lines the higher frequencies are attenuated more than the lower frequencies. The equalizer adds loss for the lower frequencies so that all frequencies will pass into the demodulator at the same level. The demodulator combines the carrier frequency with the received sideband and one of the resultant products is the voice frequency. The low pass filter (R) removes all the products of demodulation except the voice frequency. The receiving amplifier steps up the power level of the voice frequencies to that required for transmission to the subscriber. The receiving frequencies are then directed to the subscriber through the hybrid coil, thus establishing the receiving circuit.

In the system just described we had two message paths over one pair of wires. It would be possible to add more message paths using this same pair of wires by adding more carrier terminals using different carrier frequencies.

From this typical terminal it can be seen that an important feature of every carrier system consists of the modulators and demodulators which shift the frequencies of the telephone signals. Another feature of all carrier systems is the need of filters needed to select the desired signals from the modulators for transmission to the line, and to separate the line channels from each other for application to their respective demodulators, at the receiving end of the line. Filters are also used to separate groups of channels from each other.

The signals are usually transmitted over the lines between the terminals in two groups, one consisting of the E-W (east-to-west) one-way channels of all the telephone circuits handled by the system and the other consisting of the W-E (west-to-east) one-way channels of the same telephone circuits. As noted earlier, the two groups may be transmitted over different pairs, or over the same pair in different frequency ranges. The channels constituting a group are amplified by one common carrier line amplifier (or repeater) at each repeater point.

The lines, of course, have considerably greater attenuation at the higher frequencies needed for carrier transmission than at voice frequencies. Therefore carrier line amplifiers must be spaced at much shorter intervals along the line than most voice-frequency repeaters. The length of the repeater sections on any system is a function of the line attenuation, the standards for allowable noise

TCI Library: www.telephonecollectors.info

at the end of the system on each telephone channel, the maximum length of system, the noise on the line sections and the amplifiers, and, in the case of multichannel systems, of the amount of modulation in the line amplifiers. Since the line attenuation is greatest for the highest frequency channel transmitted by the system, the repeater spacing is usually determined by the rules as applied to that channel.

Because the line attenuation is great at the carrier frequencies, the variation in attenuation with temperature (and with weather in the case of open-wire lines) is also large. Furthermore, both because of the large attenuation and also because of the wide frequency band required for most carrier systems, the difference in attenuation between the highest and lowest transmitted frequency is large. These considerations impose severe transmission problems on the carrier systems which are solved in different ways on the various systems.

The variations of the lines with frequency and temperature are compensated for by equipment associated with the line amplifiers. It will be noted that though the total effects to be compensated may have very great magnitudes, the distribution of the compensation among many line amplifiers reduces the problem at each amplifier to manageable proportions. The equipment which does the compensating falls into two categories, namely, basic equalizers which compensate for the attenuation-versus-frequency distortion of the lines under mean ambient conditions, and regulating networks which adjust for the variations in the attenuation and in the attenuation-versus-frequency characteristics of the line due to changes in temperature (and other causes). The regulating networks are automatically operated, usually under control of one or more pilot frequencies wedged in between the telephone channels. In some cases, the flat gain variations may be controlled by a d-c pilot channel similar to that used in the pilot-wire regulations of voice-frequency systems, or by the energy in the carrier channel themselves. The specific application of the techniques to the various carrier systems is described in later sections.

The pilot frequencies, when used, are of course supplied by the system terminals. Another feature of carrier terminals, therefore, consists of the means for generating the pilot frequencies, and also the carrier

TCI Library: www.telephonecollectors.info

frequencies required by the various modulators and demodulators. In most systems, these frequencies must be very exact in order that the signal and pilot frequencies will accurately match the pass bands of the filters through which they must be transmitted, and that they will fall properly into their allotted frequency positions on the lines. It may be noted that in those systems in which the carrier is not transmitted, which is the case with many of the systems, the carriers supplied to the modulators and demodulators at the two ends of the system must be generated by physically separated oscillators. Any actual difference between the carrier frequencies at the two ends, which ideally should be identical, results in a corresponding displacement of the same number of cycles in all the frequencies in the telephone signals emerging from the system. The tolerance for such frequency displacements is at most a few cycles, which in terms of per cent error in the carrier frequencies necessitates considerable accuracy.

16.8 SUMMARY AND DESCRIPTION OF THE CARRIER SYSTEMS

Some of the important information on Bell System carrier systems is tabulated on Table 16-1. It will be noted that for all the systems there is given the minimum length below which it is not normally economical to use the system. For the short haul systems, a maximum length is given beyond which the transmission would be likely to fail to meet standards, due to noise, crosstalk, equalization, regulation, or for other reasons.

16.9 HISTORY AND GENERAL DESCRIPTIONS OF THE CARRIER SYSTEMS

Type

A The first carrier system introduced in 1917 was known as the "A" system and provided four 2-way channels above the voice channel on open wire pairs in the frequency range between 5 and 25 KHz. The system used single sideband transmission, and each channel used the same frequency for both directions of transmission; directional discrimination was secured by hybrid coil balance at terminals and repeater stations as with 2-wire repeaters. Later systems used separate pairs for each direction of transmission. A total of seven type "A" systems were installed in the United States, but all have long since been removed. The last one in service was between Merced and Yosemite Valley, California.

TCI Library: www.telephonecollectors.info

TABLE 16-1A MAJOR BELL SYSTEM CARRIER SYSTEMS

SHORT HAUL

	N1	N2	O	ON1	ON2	T1	N3
Line Facility	Cable	Cable	O.W.	Cable	Cable	Cable	Cable
Channels	12	12	16	20	24	24	24
Modulation	A.M.	A.M.	A.M.	A.M.	A.M.	P.C.M.	A.M.
Sidebands	2	2	1	1	1	-	1
Transmitted Carrier	Yes	Yes	Reduced	Reduced	Reduced	-	Yes
Method of Operation	(2)	(2)	(1)	(2)	(2)	(2)	(2)
Frequency Allocations (KHz)							
Lowest Trans. Freq.	36	36	2	40	36	(3)	36
Highest Trans. Freq.	268	268	156	264	268	(3)	268
System Length (Miles)							
Minimum	15	15	15	15	15	10	35
Maximum	200	200	150	200	200	50	200
Approx. Repeater Spacing (Miles)	5	5	50	5	5	6000 Ft.	5
Frogging	Each Rept.	Each Rept.	Each Rept.	Each Rept.	Each Rept.	No	Each Rept.
Compandors	Yes	Yes	Yes	Yes	Yes	Yes	Yes
Pilots	No	No	No	No	No	No	No

NOTES:

(1) Equivalent Four Wire
(2) Real Four Wire
(3) Line Signal Consists of Bipolar Pulses at rate of 1.544×10^{-6} P.P.S.

TCI Library: www.telephonecollectors.info

TABLE 16-1B MAJOR BELL SYSTEM CARRIER SYSTEMS

LONG HAUL

	C5	J2	K2	L1	L3	L4
Line Facility	O.W.	O.W.	Cable	Coax.	Coax	Coax.
Channels	3	12	12	600(4)	1860(5)	3600
Modulation	A.M.	A.M.	A.M.	A.M.	A.M.	A.M.
Sidebands	1	1	1	1	1	1
Transmitted Carrier	No	No	No	No	No	No
Method of Operation	(1)	(1)	(2)	(2)	(2)	(2)
Frequency Allocations (KHz)						
Lowest Trans. Freq.	5	36	12	60	308	280
Highest Trans. Freq.	30	143	60	3096	8320	20,448
System Length (Miles)						
Minimum	60	125	75	75	75	75
Maximum	1000	4000	4000	4000	4000	4000
Approx. Repeater Spacing (Miles)	150	30	17	8	4	2
Frogging	No	No	No	No	800 Mi.	800 Mi.
Compandors	No	No (3)	No	No	No	No
Pilots	Yes	Yes	Yes	Yes	Yes	Yes

NOTES:

(1) Equivalent Four Wire
(2) Real Four Wire
(3) Compandors are sometimes added for Crosstalk and Noise Control, but are not part of the System Terminals
(4) Or two one-way TV channels
(5) Or 660 Telephone Channels and two one-way TV channels

TCI Library: www.telephonecollectors.info

Type

B The "B" system was introduced in 1920 and provided three channels above the voice channel on one open wire pair. Different frequencies were used for transmission in opposite directions, making it possible to rely upon filter selectivity instead of impedance balance to separate the directions of transmission. This system transmitted a single sideband and the carrier frequency, using the lower sidebands of carrier frequencies at 6, 9 and 12 KHz, in the East and West direction, and the upper sidebands of carrier frequencies at 15, 18 and 21 KHz in the West to East direction. A score of type "B" systems were installed. The last one in operation was between Spokane and Lewiston, Washington.

C The type "C" system made its appearance in the 1920's. It was the first really successful carrier system and is still a member of the family of carrier systems. The last and current standard model, the C5, is a fairly complete redesign to incorporate the advantages of the modern techniques of varistor modulators, filters with molybdenum permalloy coils, new types of vacuum tubes, and feedback amplifiers. It operates on open wire facilities and provides three telephone circuits in addition to the normal voice-frequency circuit, on a single open wire pair.

The frequency allocations used in the type "C" systems lie between 6.3 and 16 KHz for transmission from East to West and between 17.7 and 30.2 KHz for transmission from West to East. The upper and lower halves of this range are used for the opposite directions of transmission. The channels are single-sideband with suppressed carriers. To reduce crosstalk, there are several "staggered" frequency allocations, some using upper and others using lower sidebands. The C5 system is available in four allocations, the CA, CB, CS and CU. These allocations are shown in Figure 16-8.

It will be noted that the "allocations" differ from each other not only in the frequencies the channels occupy but also in whether the channels are upper or lower sidebands.

TCI Library: www.telephonecollectors.info

Type

C Unlike the more complicated systems the type "C" systems translate each telephone channel to its assigned frequency position on the line in a single stage of modulation. The required carriers are not multiples of any base frequency but are generated by individual oscillators, one for each modulator and demodulator. One pilot is transmitted in each direction on all of the type "C" systems. The pilot frequency is located 50 cycles from the frequency of the suppressed carrier of the middle channel, between the carrier and the transmitted sideband. In the longer systems, the pilots are used for the automatic regulation of the systems. In the systems which are so short as to have no repeaters, the regulation may be manual.

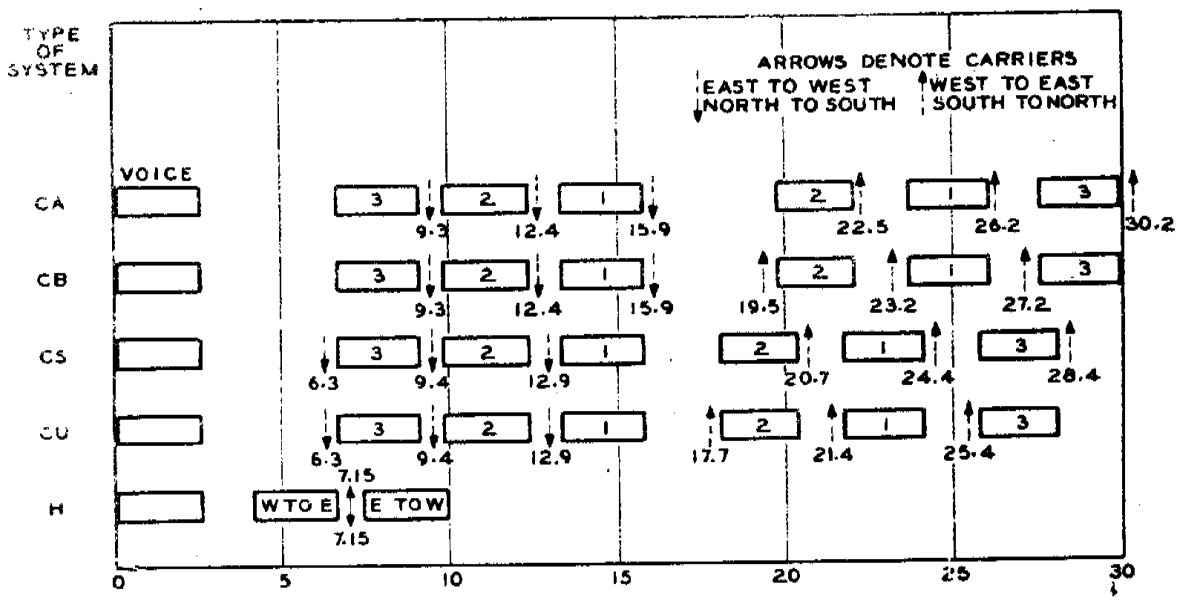

Frequency units in KHz

Figure 16-8 Frequency Allocations of Type C and H Carrier Systems

TCI Library: www.telephonecollectors.info

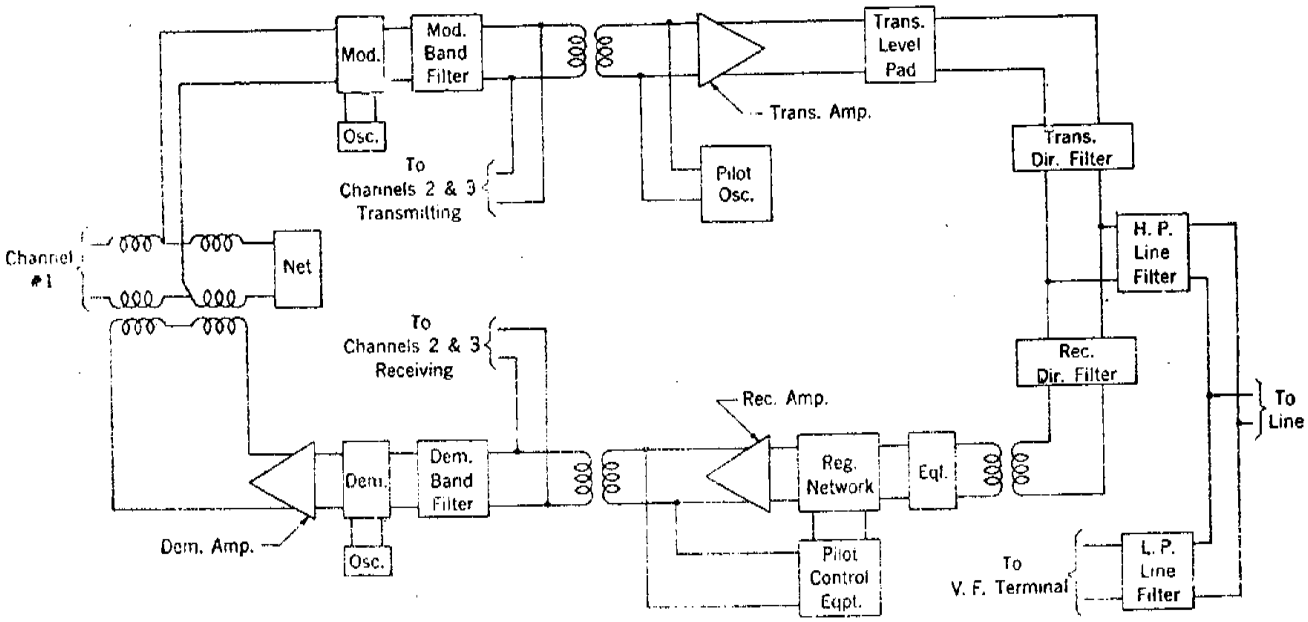

Figure 16-9 Type C Carrier Telephone Terminal

Type

C The type "C" systems are designed so that the repeater spacings are the same as for the voice-frequency systems (about 150 miles) and therefore the repeaters are located in the same stations as the voice repeaters. Spacing will vary with cable conditions.

Figure 16-9 is a simplified schematic of one channel of a Type "C" carrier system. The basic arrangements of the components, such as modulators, bandpass filters, directional filters, line filters, etc., are typical of those used in most carrier systems. Hence, circuit schematics will not be discussed for other carrier systems to be covered hereafter.

D The "D" system was designed for use on short circuits in areas of slow growth on open wire lines (1927). It provided one 2-way telephone circuit on a pair in addition to the voice frequency circuit. Like the "C" it employed single sideband transmission with the carrier suppressed, and used different frequencies

TCI Library: www.telephonecollectors.info

Type

D for opposite directions employing the lower sidebands at 10.3 and 6.87 KHz. The DA system employed a transmitting amplifier which extended the length of circuit to which the system could be applied to about 200 miles. About 550 type "D" systems have been installed.

E The "E" (1926) is a single channel system for power lines. It transmits a single sideband with the carrier suppressed. With the aid of V.F. switching the same frequency band is used for both directions of transmission. The carrier band may be placed anywhere between 50 and 150 KHz. Eleven "E" terminals grouped into three systems were placed in service.

F "F" was assigned to a single channel system using "C" equipment in 1927. Designed for foreign use. No. U.S. installation.

G-1 "G1" (1935) is a system designed for use on open wire lines for short distances not exceeding 30 miles and provides a single channel in addition to the voice channel. A novel feature is that the carrier is generated only at one terminal. The carrier and both sidebands are transmitted and the same frequencies are used for both directions. A frequency band between 6500 and 14,000 Hz is required on the line.

H The "H" system (1936) employs the same frequency allocation as the "D" system but the same frequency of 7.5 KHz is used for both directions of transmission. The carrier is suppressed and the lower sideband is used in the West of East direction and the upper in E to W. May be operated on either AC or DC. Panel mounted for relay rack or cabinet. Has a repeater as well as terminals and may be used for long circuits where only a single channel is required.

J This system provides twelve 2-way long-haul telephone channels on one open-wire pair, and has frequency allocations such that a type "C" carrier system and a voice-frequency system can also be operated on the same pair. Thus, with the advent of the type "J" system, one open-wire pair became capable of furnishing a total of sixteen 2-way telephone channels.

TCI Library: www.telephonecollectors.info

Type

J The development of the type "J" system began at about the same time as that of the type "K" and type "L" systems, and reached the stage of a field trial on a 250-mile line between Wichita, Kansas and Lamar, Colorado in 1937 and 1938.

In the type "J" systems, the west-to-east channels are transmitted in the lower part of the frequency range between about 36 and 84 KHz, and the east-to-west channels are transmitted in the upper part of the frequency range between about 92 and 143 KHz. The two oppositely directed groups of channels are sent on the same pair and are separated from each other by directional filters at each repeater point.

In order to reduce crosstalk between systems operating on the same pole line, the type "J" systems have been provided with four slightly different frequency allocations in the above general ranges. These are designated the JNA, JSA, JNB, and JSB systems, as shown in Figure 16-10. The frequency allocations for the west-to-east direction are the same for all four type "J" systems except that in two of them the channels are inverted. In the east-to-west direction the allocations are staggered in increments of one KHz, two of them being also inverted.

In the terminals of a type "J" system, the twelve telephone channels handled by the system are modulated and combined to form a basic group of channels lying between 60 and 108 KHz, by the channel bank which is also used in the type "K" and type "L" systems. It will be noted that 12 voice-frequency channels are individually modulated by carriers spaced at 4 KHz intervals from 64 KHz to 108 KHz inclusive. The lower side bands are selected for each channel by filters with the result that the 12 channels occupy the frequency range from 60 to 108 KHz. This is the band occupied after the first step of modulation for transmission in each direction and is likewise the band occupied before the last step of demodulation for transmission in each direction. The basic group is translated to the desired frequency allocation

TCI Library: www.telephonecollectors.info

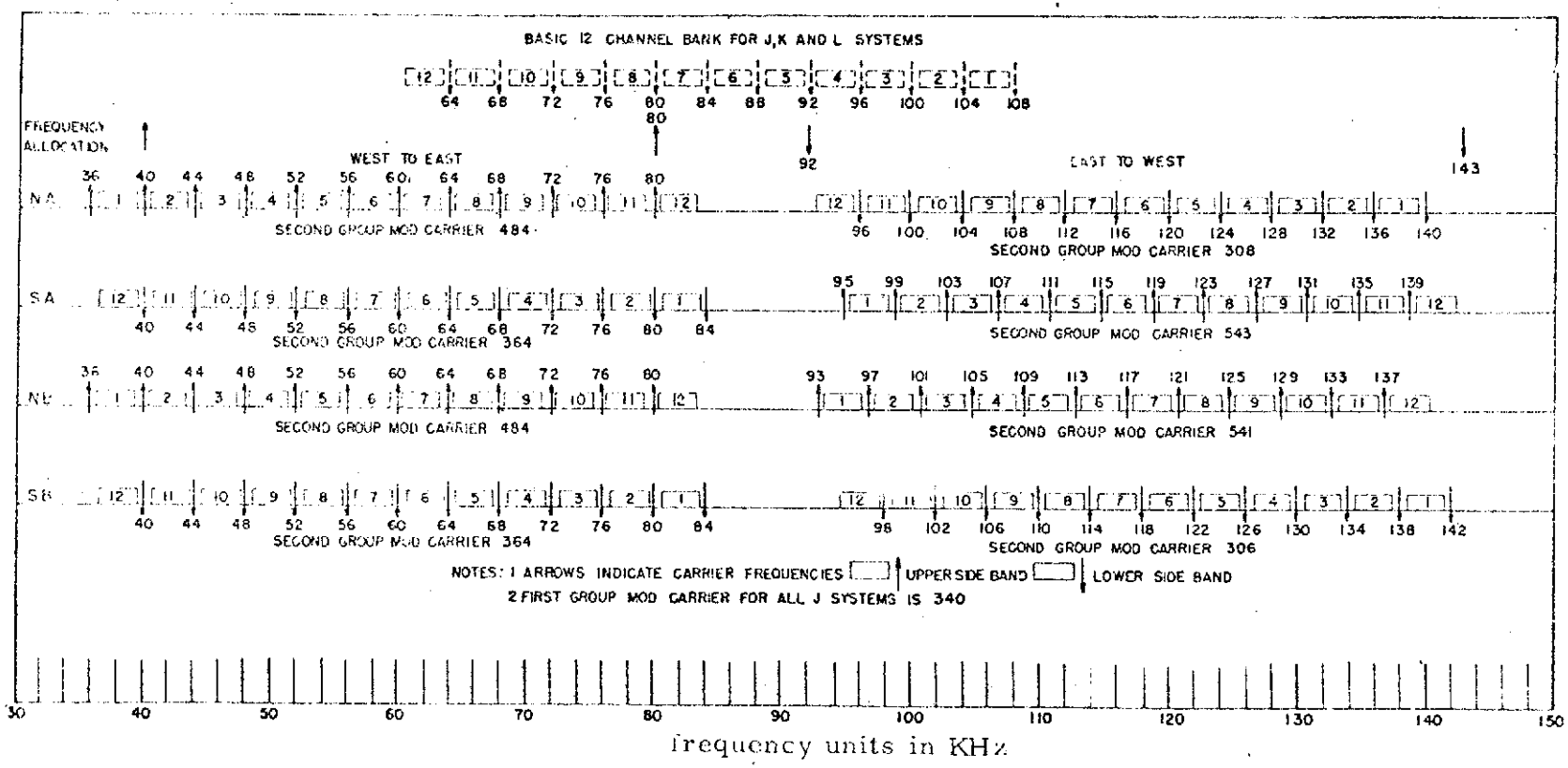

Figure 16-10 Frequency Assignments of the Type J2 Carrier Telephone System

TCI Library: www.telephonecollectors.info

Type

J on the line by group modulators, requiring two stages of modulation in the sending end and two stages of demodulation in the receiving end of the system.

The terminal equipment also supplies the line pilots. The frequencies of the pilots on the lines are the same for all four of the type "J" allocations, and are 40 and 80 KHz in the west-to-east direction, and 92 and 143 KHz in the east-to-west direction. The 80- and 92-KHz pilots are used for flatgain regulation, while the 40- and 143-KHz pilots are used for slope regulation. The pilots are actually injected at the input to the first group modulator at such frequencies as to reach the line at the above frequencies after passing through the two group modulators.

K This system was the first of the all cable carrier systems developed for use in this country. Most of the installations were made just prior to and during the World War II period.

The type "K" system provides twelve 2-way telephone channels on two 19-gauge nonloaded pairs in aerial or underground toll cables. These pairs cannot at the same time be used for voice-frequency systems. The type "K" system operates on a 4-wire basis using one pair for each direction of transmission. The two pairs are ordinarily in different cables, although in special cases a single cable may be used which has a shield between layers to separate the pairs into two groups. Because of the higher attenuation of the 19-gauge pairs at the carrier frequencies, the line amplifiers must be spaced at about one-third the interval required for voice-frequency systems, or about every 17 miles. On a route which also has voice-frequency systems, therefore, the carrier system requires two "auxiliary" repeaters between each pair of main stations where the voice-frequency repeaters are located. On new routes not already equipped with voice-frequency systems, the main, attended stations may be as far apart as 100 to 200 miles. The auxiliary stations are arranged to be unattended, with suitable alarm indications of troubles, to the nearest main station.

TCI Library: www.telephonecollectors.info

Type

K The twelve telephone channels are transmitted on the cable pairs as the upper sidebands of carriers located every 4 KHz from 12 to 56 KHz, inclusive. The total frequency band transmitted on the line therefore extends approximately from 12 to 60 KHz. The original voice-frequency telephone bands are translated to the line frequencies, and vice versa, by a double modulation process. The first step takes place in the channel modulators forming part of a "12-channel bank" which translate the twelve voice bands to a group of lower sidebands, lying between 60 and 108 KHz. This is done in order to realize the performance obtainable with quartz filters, which type of filter would not be suitable at the lower frequencies that would be involved in a single modulation process translating the voice bands directly to the 12- to 60-KHz range. The second stage of modulation in the type "K" system takes place in a group modulator which translates the 60- to 108-KHz band as a whole, to the line frequencies between 12 and 60 KHz. The frequency allocations for the two stages of modulation are shown in Figure 16-11.

All carriers used in the modulation processes are suppressed, but pilot frequencies of 12, 28, 56 and 60 KHz are transmitted from the K2 terminals along with the carrier speech bands. These serve automatically to regulate the gain and the frequency characteristics of the system, the 60-KHz pilot acting to regulate the flat gain of all of the line amplifiers, and the other three pilots serving to control the gain and the frequency characteristic of "twist" amplifiers placed in the line at occasional intervals. The 60 KHz pilot, not used in the earlier K-1 system, provides a novel method of regulation. By keeping the sum of the transmitted pilot and all other frequencies at a constant power level, variations at the input of the line amplifiers is due only to the line and can be corrected by negative feedback.

Crosstalk is controlled for type "K" carrier operation by three measures, two of which are evident by inspection of Figure 15-12. This figure shows the manner in which the carrier system is applied to the cables. The first crosstalk reducing measure is the use of pairs in two different cables for the two opposite directions of transmission. This effectively eliminates all near-end crosstalk between different type "K" systems using the same cables. The second crosstalk reducing measure is the frogging of the oppositely directed one-way carrier channels between the two cables at each carrier repeater point. As shown in Figure 16-12 the two directions of transmission are alternated between the two cables in successive

TCI Library: www.telephonecollectors.info

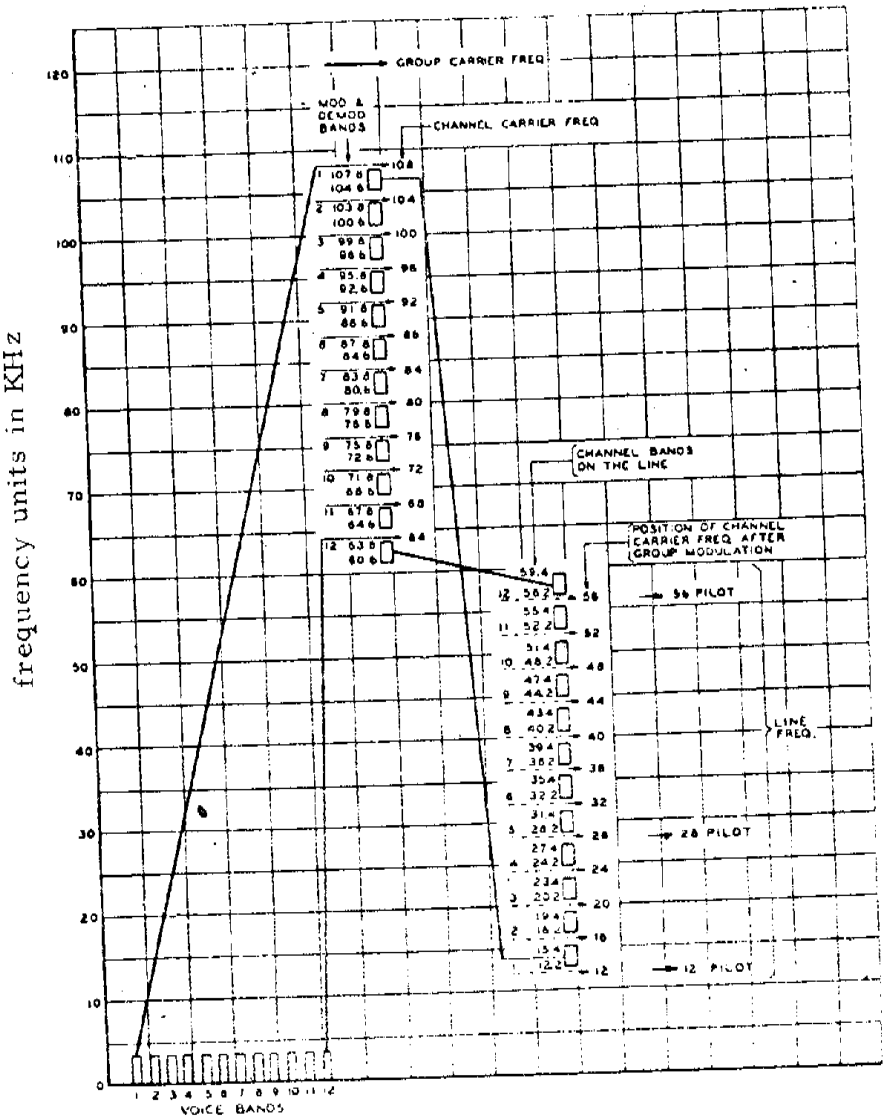

Figure 16-11 Frequency Allocations, Type K Carrier System

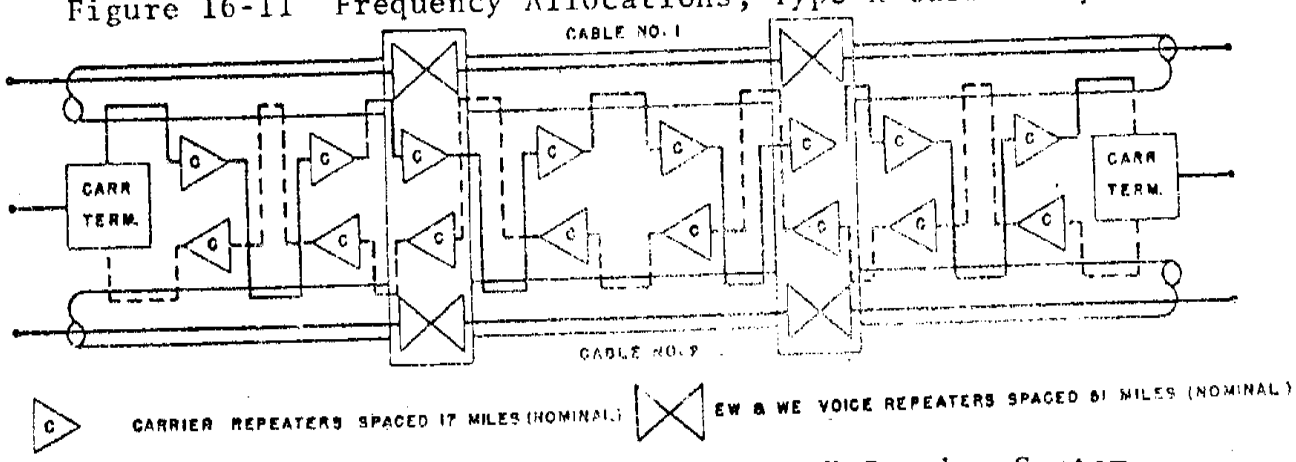

Figure 16-12 Block Schematic, Type K Carrier System

TCI Library: www.telephonecollectors.info

Type

K repeater sections. If the carrier circuits were not frogged, the high level signals at the output of a carrier repeater on one system could crosstalk into the paralleling voice-frequency pairs in the cable and could then be propagated back a short distance on the voice-frequency pairs to a point ahead of the carrier repeaters, where they could again crosstalk into another carrier system at the low level input to its carrier repeater. When the systems are frogged as shown, the second crosstalk coupling in the interaction crosstalk path just described terminates in the disturbed carrier system at a high level point at the output of a repeater, and therefore is less serious by the gain of a carrier repeater.

Crosstalk between systems transmitting in the same direction is reduced by the use of special balancing coils interconnecting the various "K" system cable pairs at certain repeater stations.

L The Type L-1 Carrier System was developed just prior to World War II but most of the installations were made after the war ended. The "L-3" Carrier System was introduced about 1953. Type "L" carrier telephone systems are designed for application to coaxial conductors. The telephone terminal equipment may also be used on microwave radio systems or other mediums capable of handling an extremely wide range of frequencies. The coaxial cable structure is inherently self-shielding against crosstalk from paralleling tubes.

Separate coaxial tubes are used for opposite directions of transmission, using the same frequency spectrum for both directions. It is, therefore, a true four-wire system. One coaxial tube transmits in one direction, and another tube transmits in the opposite direction.

The type "L-1" Carrier System has a capacity of handling either 600 telephone message channels or two one-way 2.7 KHz black and white television channels on one pair of coaxial tubes. Special terminals permit transmission of color television with slight picture degradation.

TCI Library: www.telephonecollectors.info

Type

L The type "L-3" Carrier System is capable of handling 1,860 telephone message channels or 660 message channels and one 4 MHz television channel simultaneously on one coaxial tube. Therefore, each pair of tubes will transmit 1,860 telephone conversations or 600 conversations together with 2 oppositely directed black and white or color television programs.

In the "L-1" system the first modulation step places 12 voice channels in the 60 to 108 KHz range to form a channel bank identical with the channel banks used in the "J" and "K" systems, as previously discussed. In a second step of modulation, five channel banks are translated to the frequency band between 312 and 552 KHz. This constitutes a basic supergroup of 60 voice channels. The final modulation step translates the supergroups to appropriate line frequency positions as shown in Figure 16-13, which also indicates the carrier frequencies used in the group and supergroup modulators.

The "L-3' Carrier System was designed to operate over a broader frequency band than the "L-1" system. This design provides for a maximum of as many as 1860 two-way telephone channels in the frequency range between 312 and 8284 KHz. As shown in Figure 16-14, ten 60 channel supergroups are modulated with appropriate carriers to form a master group of 600 voice channels in the frequency range between 564 and 3084 KHz. The first master group is transmitted on the line at these frequencies, while further modulation steps are used to place the second between 3164 and 5684 KHz, and the third between 5764 and 8284 KHz. In addition, a single supergroup may be transmitted below master group No. 1 in the basic supergroup range of 312 to 552 KHz.

Through the use of submaster and master group equipment in a manner similar to the "L-3" master group 1 arrangement, 720 channels can be realized on existing "L-1" lines. Figure 16-15 shows this 12 supergroup arrangement.

In both systems sixty-Hz A.C. power for the operation of repeaters is fed from terminal and main repeater points over a series loop made up of the two center conductors of the pair of coaxials used

TCI Library: www.telephonecollectors.info

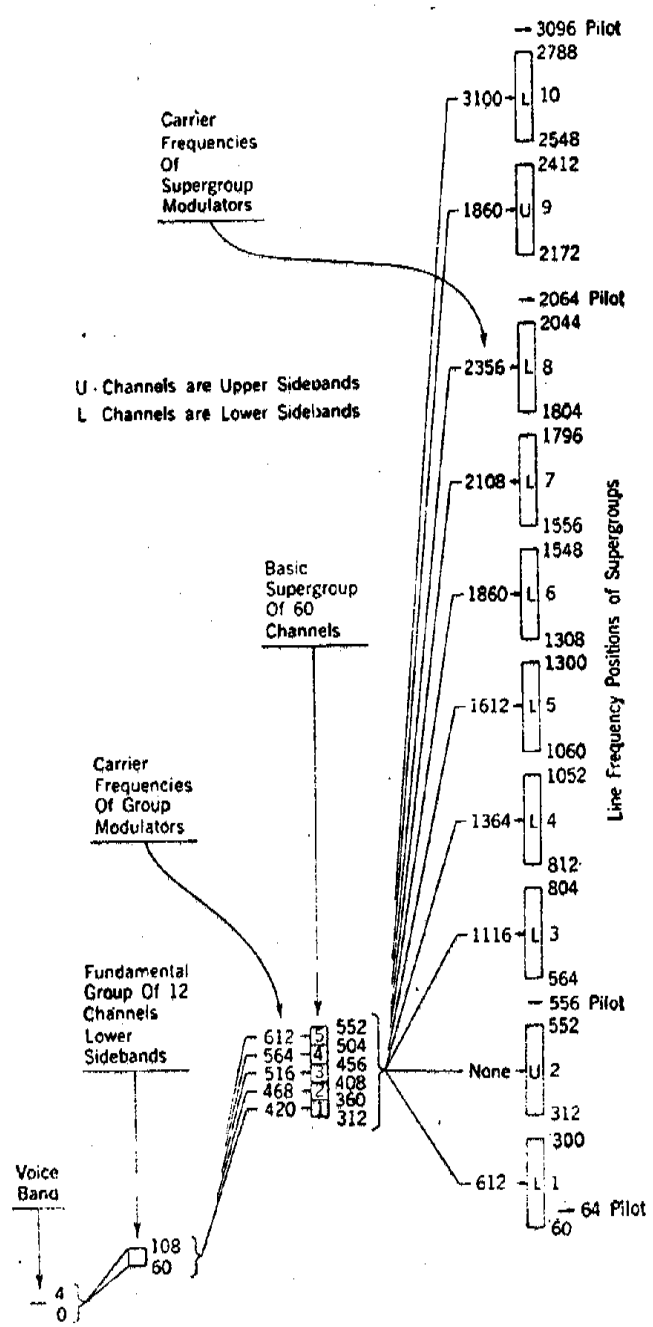

Frequency units in KHz

Figure 16-13 L1 Coaxial System Frequency Allocations

TCI Library: www.telephonecollectors.info

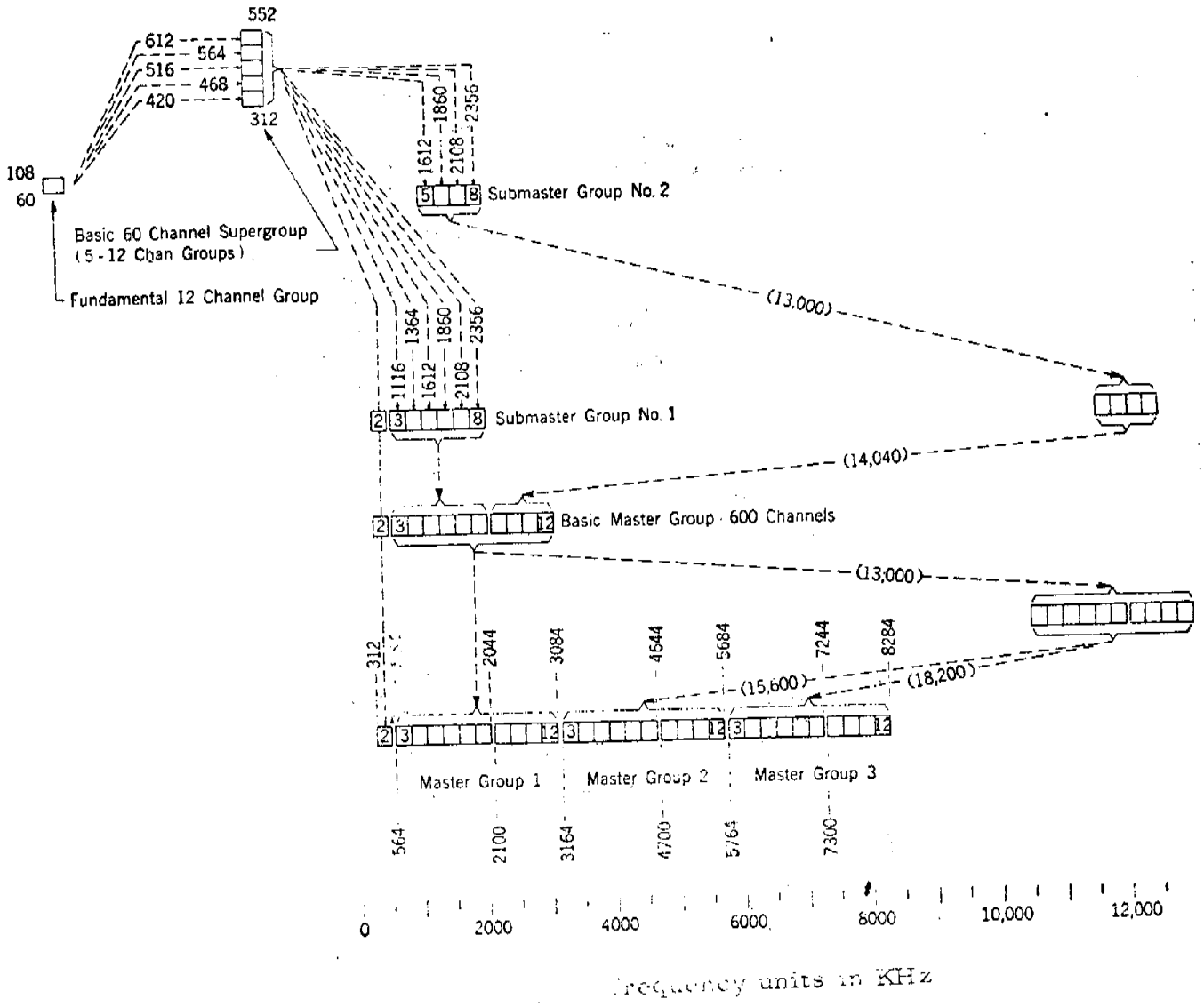

Figure 16-14 Frequency Translations of L3 System

TCI Library: www.telephonecollectors.info

Type

L for the two directions of transmission. The 60-Hz currents are separated from the high frequency transmission currents by means of power separation filters.

Regulation in the "L-1" system is accomplished with the use of four pilot frequencies of 64,556, 2064 and 3096 KHz. The 2064 KHz pilot is used to vary gains of amplifiers to compensate for line attenuation caused by temperature variations. The other three pilots control adjustable equalizers.

Regulation in "L-3" systems employees six pilot frequencies at 308, 566, 2064, 3096, 7266 and 8320 KHz. The 7266 KHz pilot controls amplifier gains compensating for line attenuation changes due to temperature variations. The other five pilots control adjustable equalizers.

The L-1860 multiplex plan differs from the earlier L-3 plan shown in Fig. 16-14 by eliminating the submastergroup stages of modulation. Additional carrier frequencies are used instead to modulate the supergroups directly to their basic master group allocation. The final frequency spectrum remains the same.

The L-4 system is the latest in the family of heavy duty coaxial cable transmission systems. It is capable of handling 3600 two-way message circuits (conversations) one each pair of coaxials. Although the nominal repeater spacing is reduced to 2 miles, the relative cost per channel mile is much lower than the L-3 system.

There are a five types of repeaters used in the L-4 system: basic, regulating and equalizing line repeaters, transmitting and receiving main station repeaters.

The basic repeater has a fixed gain that is about equal to the loss of 2 miles of 3/8 inch coaxial cable. At intervals of no more than five basic repeaters, regulating repeaters are used. These repeaters have a variable gain to compensate for changes in cable loss due to temperature. The equalizing repeater has all of the functions of the regulating repeater plus the circuitry for effecting remote control of six variable

TCI Library: www.telephonecollectors.info

Type

L equalizers under command from a main station control center. The main station repeaters are capable of all of the functions of an equalizing line repeater as well as providing 10 additional adjustable equalizer networks. The receiving main station repeater also provides post-regulation of the lower edge of the transmission band.

Just as in the L-3 system, a final multiplexing step is required to stack the 600 channel message blocks into one broadband array for L-4. The MMX-2 has been developed to translate six basic 600 channel message groups, LMX-2, into a 0.564 to 17.548 MHz broadband signal. The L-3 carrier terminal has been redesignated as MMX-1.

Automatic protection of transmission equipment is provided on a one spare for three regular basis, with individual mastergroups being transferred rather than a complete bank of six. Each MMX-2 bay accommodates three transmit and three receive L4 coaxial tubes with a maximum capacity of 10,800 voice channels. Although the MMX-2 terminal handles a frequency band twice as wide as MMX-1, the new system occupies less space, is easier to install, is less expensive, and produces a cleaner signal.

Development of a new L-carrier with even more capacity has begun. The L5 coaxial system is planned to use a pair of 0.375 inch coaxial tubes for 9,000 circuits consisting of 15 master groups in a bandwidth of 48 MHz. Route capacity is anticipated at 90,000 circuits at an even lower cost per channel mile than L4. Service is aimed at the early 1970's.

TCI Library: www.telephonecollectors.info

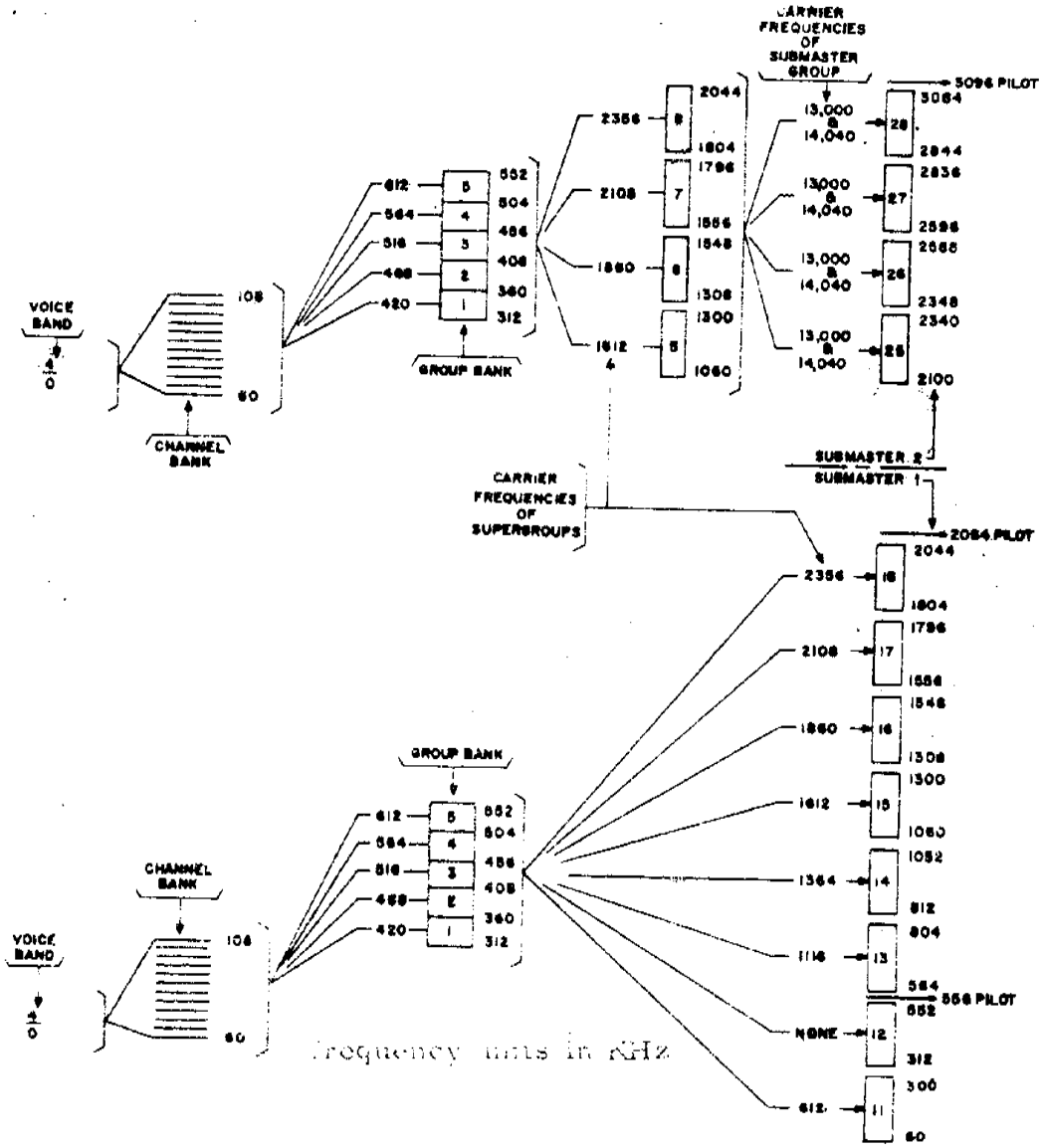

Figure 16-15 Frequency Allocations - 12 Supergroup Arrangement

TCI Library: www.telephonecollectors.info

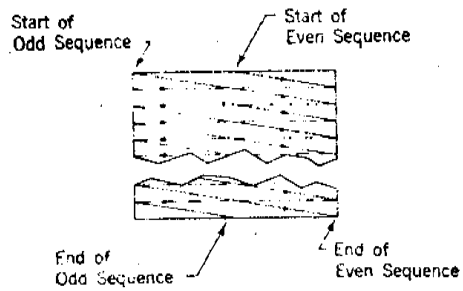

Figure 16-16 TV Scanning Sequence

Type "L" carrier system facilities are used for the transmission of television signals as well as for multiple channel voice transmission. Transmission of a television signal necessarily requires the employment of a very wide band of frequencies. This results from the fact that, television depends upon the repetitive detail scanning of a scene at extremely rapid intervals. Standard practice in the United States for black and white television calls for 525 horizontal lines for each complete scanning of the scene and for 30 complete scans per second, with the reproduced image having a width to height ratio of 4 to 3. In practice, a single complete scan or "frame" is accomplished in two steps. In the first step, the scene is scanned over the odd-numbered 262-1/2 lines to form one "field"; and the second step, it is again scanned over the even 262-1/2 lines. This procedure, known as interlaced scanning, affects the eye of the viewer of the image as if the total scene were being reproduced 60 times per second instead of 30, and thus minimizes "flicker."

The scanning sequence is shown in Figure 16-16. For each line, the electron beam in the television camera and in the cathode-ray receiving tube moves horizontally across the image. At the same time it moves vertically downward a distance corresponding

TCI Library: www.telephonecollectors.info

Type

L to two lines, under the control of the sweep circuit voltages applied to the deflecting plates or coils of the tubes. The scanning beam is blanked out at the completion of each horizontal line and returned quickly to the starting point of the next line, as indicated by the dotted lines in the figure. The process is repeated until the bottom of the image is reached. The beam is then blanked out for a longer interval while it is returned to the top of the image for the start of the next scanning sequence. The duration of each scanning line is 54 microseconds and 9.5 microseconds are allowed for the horizontal retrace of the beam. The image is scanned at the rate of 15,750 lines per second.

To maintain the exact synchronization between the camera and the receiver that is obviously necessary, synchronizing pulses generated at the image pickup point are applied to the camera tube and transmitted to the receiver along with the image signals. The synchronizing pulses are superimposed on the signal blanking pulses in such a way that they can be "clipped" from the image signal and applied to the saw-tooth generators which control the deflections of the scanning beam. As previously noted, the horizontal synchronizing pulses must recur at the rate of 15,750 per second and the vertical pulses, which return the beam from the bottom to the top of the image, must recur at the rate of 60 times per second.

Figure 16-17(A) indicates graphically the form of the TV signal at the receiver for two scanning lines covering a total time of 127.0 microseconds. The image signal, which is applied to the control electrode (grid) of the picture tube, may vary between zero amplitude for "white" and an amplitude which effectively blocks the electron beam to produce "black" in the image. The synchronizing signals, it may be noted, rise above the black level to a region sometimes called "blacker than black." Figure 16-17(B) illustrates the form of the longer vertical synchronizing pulse, which extends over a period of 190.5 microseconds. Vertical and horizontal synchronizing pulses are separated for application to their proper respective deflecting coils by means of a simple RC timing circuit which recognizes the

TCI Library: www.telephonecollectors.info

Type

L large difference in their time duration. The vertical pulse is "serrated" as shown so that the horizontal pulses will continue during the vertical deflection period to avoid the possibility of their falling out of step. A series of "equalizing" pulses is included before and after the vertical synchronizing pulse to take care of the time factors introduced by the fact that the first scanning field is completed in the middle of a line, and the second at the end of a line.

Considering the transmission of the total television signal, it is evident that the indispensable synchronizing pulses alone make the signal rather complex. The part of the signal carrying the image must be much more complex if satisfactory image detail (resolution) is to be obtained. Thus if a scene is to be analyzed as the horizontal beam crosses it in the same detail as is provided by the 525 line dissection of the image vertically, the signal might take 4/3 x 525 or 700 different values for each horizontal trace. This would correspond to a variation at the rate of 350 Hz per line which would mean 350 x 525 x 30 or approximately 5-1/2 MHz. Furthermore, if the scene being televised was one in which there were many transitions between black and white, such as a black and white checkerboard pattern, the image signal would tend to take the form of a square wave. Accurate transmission in such a case would theoretically involve frequencies extending toward infinity. Actually, practical experience indicates that entirely satisfactory resolution for black and white images is obtained from a video signal including frequencies up to a maximum of about 3 million cycles, although the standard broadcast TV signal is normally considered as 4.2 million cycles in width. In any event, it is to be noted that the lower frequencies are indispensable. Included here are the vital synchronizing pulses as well as the major values in the image structure. The higher frequencies become increasingly less important as they approach values which tend to enhance the detailed accuracy of the picture beyond the practical limit of perception of the normal eye. As might be expected also, the major energy content of the signal tends to be concentrated in the lower frequencies.

TCI Library: www.telephonecollectors.info

Type

L For transmission over the Type "L-1" carrier system, the frequency range on the line between about 200 and 3100 KHz is employed. The lower frequency is limited by equalization difficulties and the upper by the characteristics of the line repeaters. Since the standard video signal begins at about 30 Hz and may be considered as extending upward, in this case, to about 2800 KHz, it is necessary to translate it by modulation procedures to place it in the proper position for transmission over the line. This is accomplished by two stages of modulation, as indicated in Figure 16-18. The carrier frequency of the first modulation stage is 7944.72 KHz. A bandpass filter permits the passage of the lower sideband, extending from about 5100 KHz up to the carrier frequency plus a small part of the upper sideband, extending from the carrier frequency up to about 8100 KHz. This latter is known as a "vestigial sideband" and is included in the passed band to insure first that there is no clipping of the lower sideband and second to reinforce the lower frequencies of the signal which are of vital importance. The second modulation stage employs a carrier of 8256 KHz to translate the foregoing main and vestigal sidebands to the range between about 200 and 3100 KHz, with the carrier frequency now appearing at 311.27 KHz.

The color television currently standard in the United States employs a video signal extending from a few cycles to about 4.2 MHz. This is necessary because the color or chrominace information of the signal is modulated on a subcarrier whose frequency is 3.579545 MHz.

Such a frequency band is too broad for transmission over ordinary "L-1" facilities. Color transmission in this case requires the use of an additional modulation step which effectively shifts the color subcarrier down to a value of 2.612 MHz. This results in some degradation of the "luminace" or black-and-white part of the signal which, however, has little visible effect in a color picture. When a purely black-and-white signal is sent over the same line, an automatic switch changes the filters so as to permit the signal to occupy the full frequency band.

TCI Library: www.telephonecollectors.info

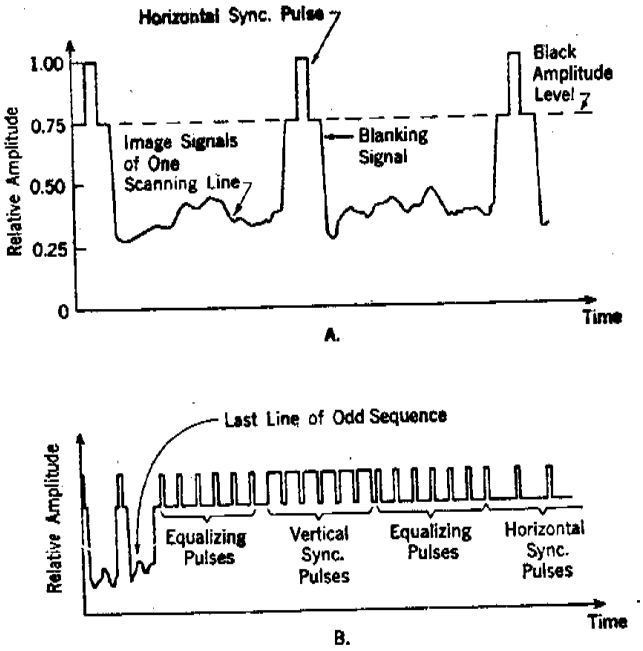

Figure 16-17 TV Signal Form

Type

L Transmission of an unmodified color signal is well within the capacity of "L-3" systems. Here, the 0-4.2 MHz color signal is modulated with a 4139 KHz carrier so that it appears on the "L-3" line as an upper sideband extending between the carrier frequency and about 8340 KHz. A vestigial lower sideband extending downward to approximately 3640 KHz is also transmitted. This still leaves room for 660 telephone circuits in the 512 KHz to 3084 KHz band. At the receiving end the video signal is restored to its original 0-4200 KHz band by modulation with the same carrier frequency of 4139 KHz. The demodulating carrier is generated locally but is controlled by synchronizing pulses transmitted along with the video signal.

TCI Library: www.telephonecollectors.info

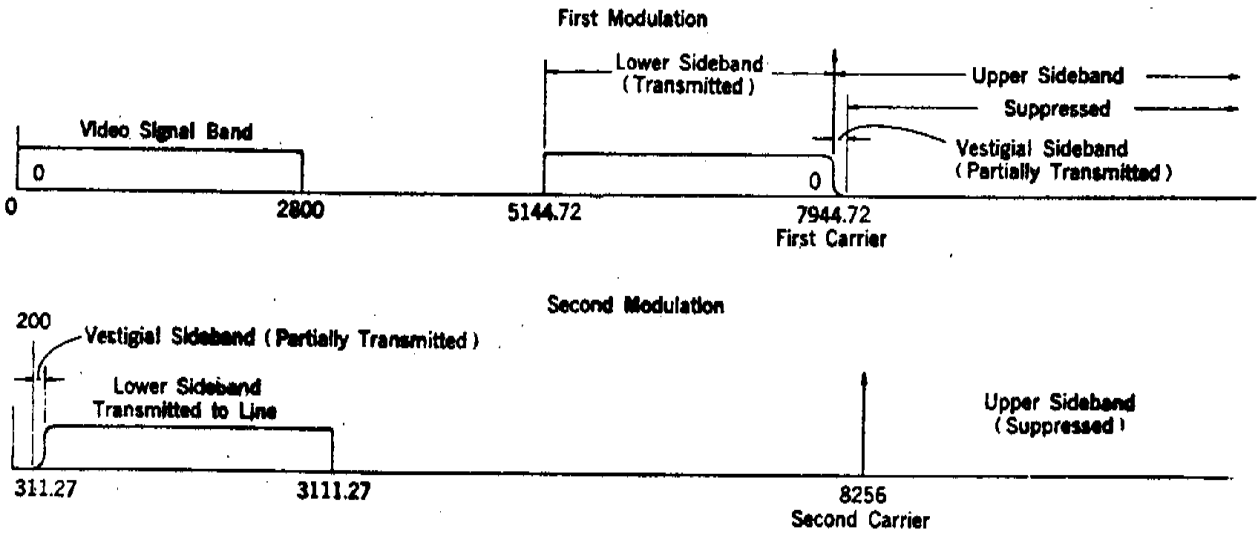

Figure 16-18 Video Signal Frequency Translations

Type

M The "M1" carrier system was developed primarily to provide rural telephone service by means of carrier transmission over power distribution lines, open wire telephone lines, or a combination of the two. Unlike other systems, carrier equipment is installed on the subscribers premises. The "M1" system uses amplitude modulation with double sideband and carrier transmitted. A maximum of five frequency divided channels are provided. Transmission from the common (central office) terminal is within a frequency band of approximately 152 KHz to 233 KHz. From the subscribers' terminals the transmitted frequencies are in a band from approximately 287 KHz to 413 KHz; on a reverting call connection the carrier frequency of the calling subscribers transmitter is automatically raised by 10 KHz.

Ringing, dial and switch-hook signals are accomplished by the interruption of the carrier; a 30 Hz rate is used for ringing. Power is derived from the 60 Hz power line.

TCI Library: www.telephonecollectors.info

Type

M The length of lines is limited to about 15 to 20 miles for power lines or to about 40 miles for open wire telephone lines.

N The "N1" carrier system was designed specifically for short haul circuits up to 200 miles in cable. The system provides 12 two-way telephone circuits on two nonloaded pairs or a quad in a single cable. The system is designed to operate on a "4-wire" basis using separate pairs and different frequency bands for each direction of transmission. Double sideband modulation with transmitted carriers spaced 8 KHz apart is utilized, considerably simplifying carrier supply arrangements compared to single sideband carrier systems.

The frequency allocation of the Type "N" system is given in Figure 16-19 and 16-20. The frequencies on the line are nominally 164 to 260 KHz in one direction of transmission with channel 1 carrier at 168 KHz and channel 12 carrier at 256 kc. In the other direction the frequency band nominally is 44 to 140 KHz with channel 1 carrier at 136 KHz channel 12 carrier at 48 KHz. Group modulation from one frequency band to the other is accomplished by modulating the group with the 304 KHz group carrier and selecting the lower sideband. An additional channel numbered 13 and occupying the frequencies 40 and 264 KHz is available to replace channel 1 in case signaling difficulties are encountered in long systems, or to replace any other channel which may be inoperative due to interference from extraneous sources. The frequency space below 36 KHz is unused except for the transmission of d-c power over the simplex to repeaters. Operation on a channel 2-13 basis is now preferred over channels 1-12 due to superior frequency response and noise performance.

Devices known as "compandors" are used to compress the range of speech volume as transmitted to the line and to expand it to its original range at the receiving end of the line. This process improves the signal to noise and crosstalk ratio for the system and eliminates the need for special crosstalk balancing and noise treatment for the cable pairs.

TCI Library: www.telephonecollectors.info

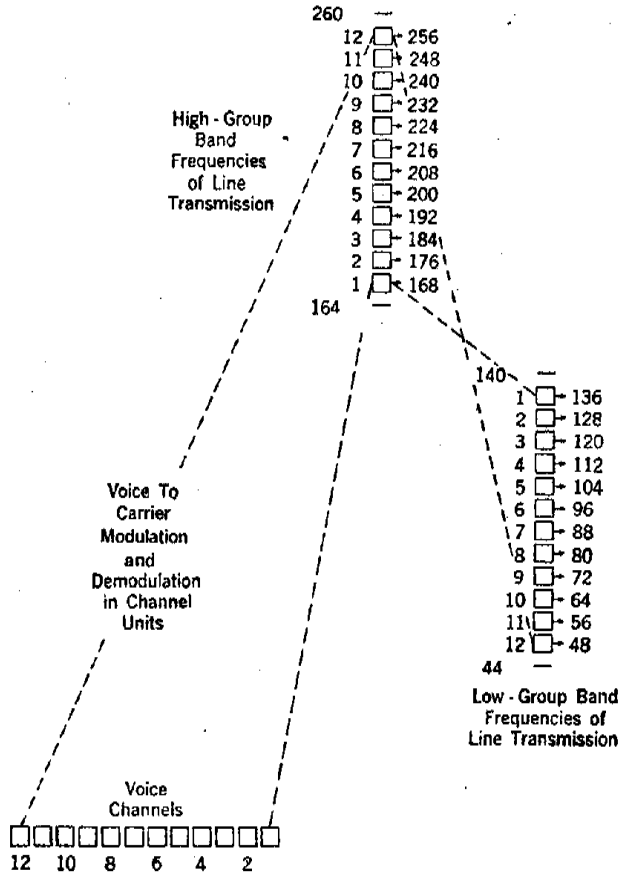

frequency units in KHz

Figure 16-19 Type N Carrier Frequency Translations

Channels 1-12

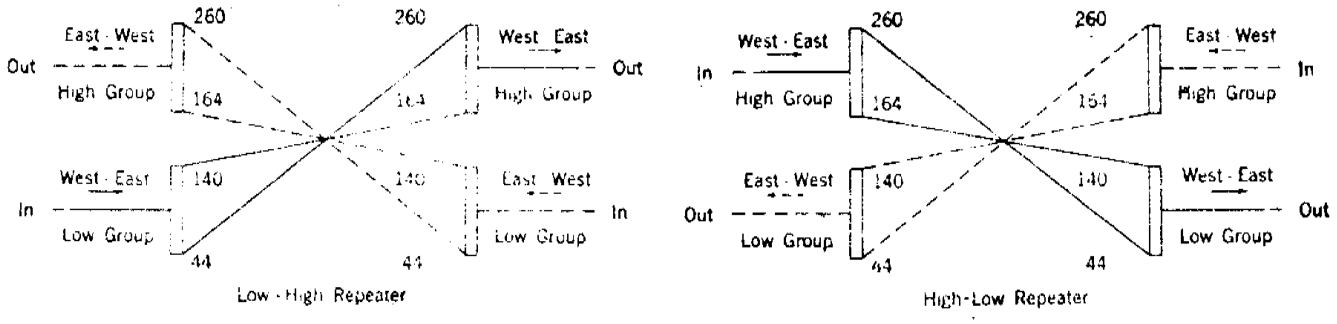

frequency units in MHz

Channels 1-12

Figure 16-20 Type N Carrier Repeater Frequency Translations

TCI Library: www.telephonecollectors.info

Type

N Frequency frogging is used at each repeater whereby the frequency groups are interchanged for each direction of transmission, and the frequency sequence of the individual channels is inverted. This is done by modulating both groups with a single 304 KHz carrier. The frequency frogging minimizes the possibility of interaction crosstalk around the repeaters through paralling V.F. cable pairs. It also permits the same repeater spacing to be used for both directions of transmission.

Regulation of line transmission is accomplished in each repeater and in the receiving group unit in each terminal by thermistors in the feedback circuits of the respective amplifiers using the energy of the transmitted frequencies (primarily the channel carriers) as pilots.

Another feature of the Type "N1" carrier systems, not provided on previous types, is a built-in signalling system using a single frequency above the voice range (3700 Hz) in each direction of transmission. These signaling systems are suitable for intertoll dialing and supervision.

The "N2" carrier terminal is a transistorized version of this system designed to meet the transmission performance requirements of intertoll trunks handling direct distance dialing and message channel traffic.

The transmission plan is the same as for the earlier "N1" terminals. Since carrier line frequencies, levels, type of modulation, and the use of compandors is the same, the "N2" terminals may connect to the same cables and the same repeated line circuits that are suitable for "N1" use.

TCI Library: www.telephonecollectors.info

Type

N The "N2" terminals are designed to work with separate, type E, single-frequency signaling equipment or multi-frequency key pulsing. No provision will be made for the 3700 Hz out-of-band signaling provided optionally for "N1" terminals.

"N3" carrier is a 24 channel, completely transistorized four-wire short haul cable system. "N3" operates on the same frequencies as "N1" and "N2" over "N" repeated lines.

"N3" carrier uses the building block of a twelve channel group. The voice signals are compressed, modulated, filtered and combined in the transmitting channel equipment. The reverse process takes place in the receiving channel equipment. The channels are filtered, demodulated and expanded in order to retrieve the voice frequency. Transmitted carriers are used to demodulate the even numbered channels. Nontransmitted carriers are obtained from a common supply to demodulate the odd numbered channels. Two twelve channel groups are combined into a broadband 24 channel signal.

"N3" carrier group equipment is similar to that used in "N2". High-group and low-group transmit and receive units are available for application to any established N carrier line frequency plan.

The "N3" carrier system uses a common carrier supply rather than a locally generated one. The supply is derived from an 8 KHz oscillator operating into a binary divider for stability. A 4 KHz tap of a "J", "K" or "L" primary supply can be used when available.

O The Type "O" carrier system is designed to provide relatively short-haul carrier channels over open wire conductors on an economic basis. It makes use of miniaturized equipment and many of the other features of the Type-N system including compandors, frequency-frogging and built-in 3700 Hz signaling.

TCI Library: www.telephonecollectors.info

Type

O The "O" carrier system operates on a two wire basis over an open wire pair suitably transposed for such carrier transmission.

"O" carrier provides a maximum of 16 voice channels "stacked" from 4 subsystems designated OA, OB, OC and OD. Each subsystem provides 4 channels in frequency ranges as follows:

	Low Groups		High Groups
OA System	2 to 18 KHz	and	20 to 36 KHz
OB System	40 to 56 KHz	and	60 to 76 KHz
OC System	80 to 96 KHz	and	100 to 116 KHz
OD System	120 to 136 KHz	and	140 to 156 KHz

If all 4 channels of the OA system are used, the V.F. channel on the pair must be discontinued, but some carrier telegraph channels may be added in the spectrum space below 2 KHz. If the OA system is operated as a 3 channel system, it may be used as a supplement to a V.F. circuit on the same pair in exactly the same manner as a Type C system. The OB, OC, and OD systems use frequency frogging at the repeaters in the same manner as the Type "N" cable systems. OB, OC, and OD systems may be used on the same pair as Type "C" or Type OA systems (but not both) to obtain 12 additional carrier channels. Two types of repeaters are provided for the "O" carrier systems. One type is for the Type OA system which does not provide frequency frogging. The other is for the OB, OC, and OD systems which do provide such frogging.

Unlike the "N" system, twin sideband transmission is used, with the upper and lower sidebands of a single carrier providing two channels transmitting in the same direction. Thus only two carriers, spaced 8 KHz apart, are required to obtain the 4 voice channels. Figure 16-21 indicates the frequency translations employed in the O system. The two carriers are transmitted over the line, and their combined power is used for regulation of the amplifiers at repeater and group receiving terminals to correct for line attenuation variations.

TCI Library: www.telephonecollectors.info

Type

ON The Type "ON1" cable carrier system is a composite system using Type "O" carrier terminal equipment and Type "N1" repeater equipment. Since the Type "O" terminal equipment provides for single sideband channel operation, it is possible to obtain 5 basic 4 channel groups (20 channels total) within a line frequency group band width equivalent to that used for the 12 double sideband channels of the Type "N1" system. Figure 16-22 indicates the modulation and demodulation steps of the Type "ON1" system and the frequency spectrums used. Note that the basic 4 channel group frequency band is the same as for the "O" system and the high and low group line frequency spectrums are approximately the same as for the Type "N1" system.

(Low group 4KC lower at both ends and)
(High group 4KC higher at both ends)

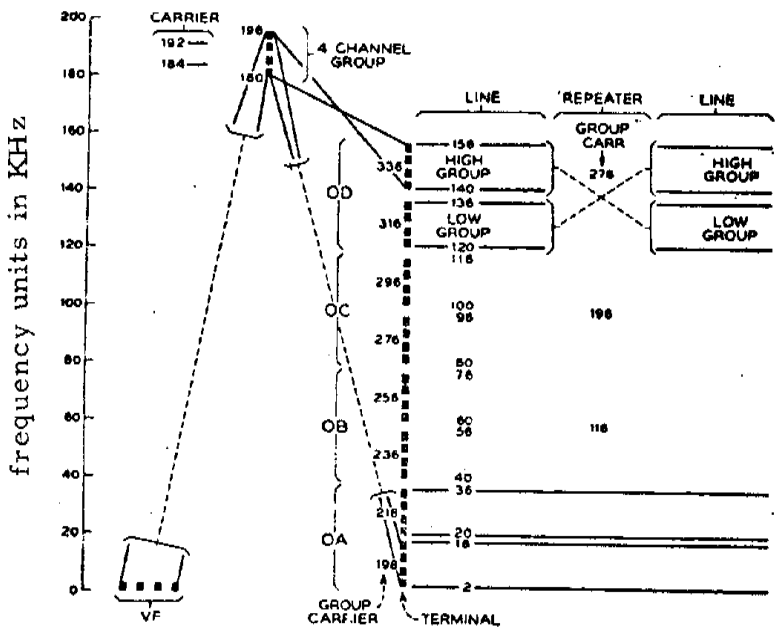

Figure 16-21 Type O Modulation Plan

TCI Library: www.telephonecollectors.info

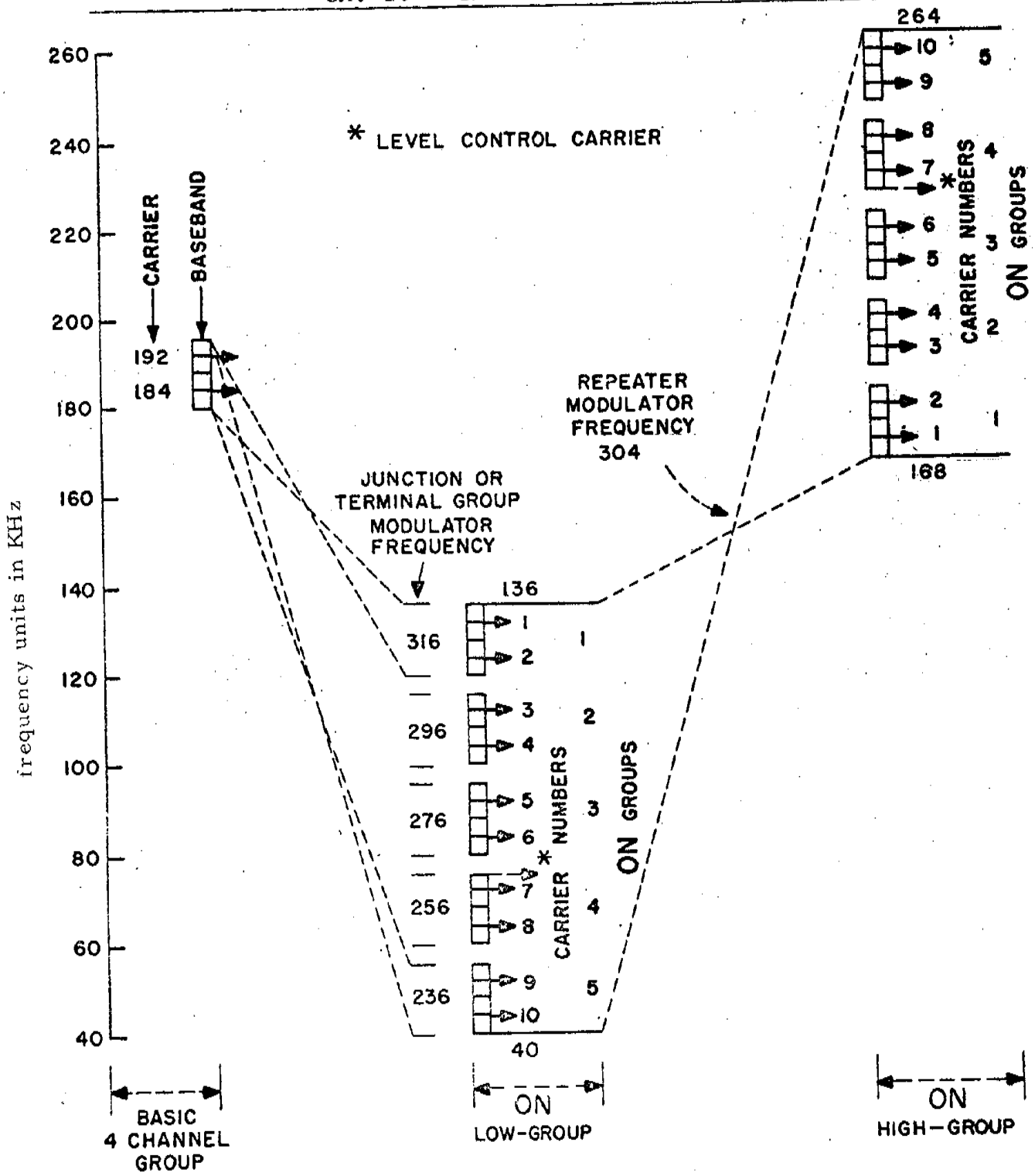

Figure 16-22 ON1 Carrier System Modulation Plan

TCI Library: www.telephonecollectors.info

Type

ON Because of the ease of transition between cable and open wire, and because this transition can be made at any point, the "ON1" system is adapted to open-wire, cable and radio-link combinations. For example:

(1) Any number of type "O" channels up to 20 can be installed at one end of the cable, transmitted over two pairs in the cable to a junction with one or more open-wire lines, and then distributed to the open-wire facilities in any way desired. The 20 channels might be divided among five OB systems on five separate open-wire pairs or connected to a family of OA, OB, OC and OD Systems on one pair, and a fifth system of any type on a second pair.

(2) The cable can be located between two open-wire lines. It is not necessary that the cable terminate at a central office at either end. Alternately, open-wire can occur between two cables.

(3) The "ON1" arrangement can be applied readily to radio systems either directly or through intervening cable or open wire.

(4) Type "ON1" channel terminals can be installed at each end of the cable to obtain a maximum of 20 all-cable circuits per quad in "N" cables.

A terminal is made up of standard "O1" channel units and group-transmitting units, and slightly modified "O1" group-receiving, twin-channel, and group-oscillator units.

The "ON1" repeaters located between the junction or the terminal and the type "N" carrier line are similar to "N1" repeaters.

In order to more fully utilize the frequency carrying capabilities of the "N" type high frequency line and of some microwave radio systems the "ON2" carrier system was developed. The "ON2" system provides 24 voice-frequency channels as compared to the 20 obtainable with "ON1". The "ON2" carrier can be used for systems to be operated over all cable, all radio, and cable-radio combinations.

TCI Library: www.telephonecollectors.info

Type

ON Standard arrangements are available for stacking four of these systems so that up to 96 voice frequency channels can be multiplexed on a single radio path.

The 24 channels of the "ON2" system are arranged at the terminal in the frequency band from 36 to 132 KHz (see Figure 16-23). For transmission on the line 36 to 132 KHz is used as the low band and is modulated with a 304 KHz oscillator to produce 172 to 268 KHz which is the high band. The resultant carriers are the same as those of channels 2 to 13 of the "N1" carrier system.

Like the "ON1", the "ON2" is basically an arrangement of stacked "O" carrier terminals which are combined for transmission over an "N1" carrier line. The "ON2" uses a stack of 6 of these 4 channel terminals in order to obtain a total of 24 channels. As indicated in Figure 16-23 the only differences in the 4 channel terminals used for "ON2" as compared to "ON1" are in the group oscillator and the group receiver.

P Unlike other types of carrier systems, the "P" was designed to operate between a telephone office and small groups of rural customers instead of between two telephone offices. This system provides up to four two-way channels for simulataneous operation on a single pair of wires above a voice-frequency circuit. Each channel uses a transmitted carrier and double-sideband transmission for each direction. The carriers are spaced at 12-KHz intervals and are arranged in the frequency band between 12 and 96 KHz.

Each channel, capable of serving eight telephones on a party line, requires one terminal at the central office and another mounted on a pole near the customers' premises. To make this system economically feasible, it was necessary to reduce the cost of terminal equipment to a minimum. This was accomplished by using the latest devices and techniques, including transistors, silicon aluminum varistors, ferrite inductors, printed wiring, etc.

TCI Library: www.telephonecollectors.info

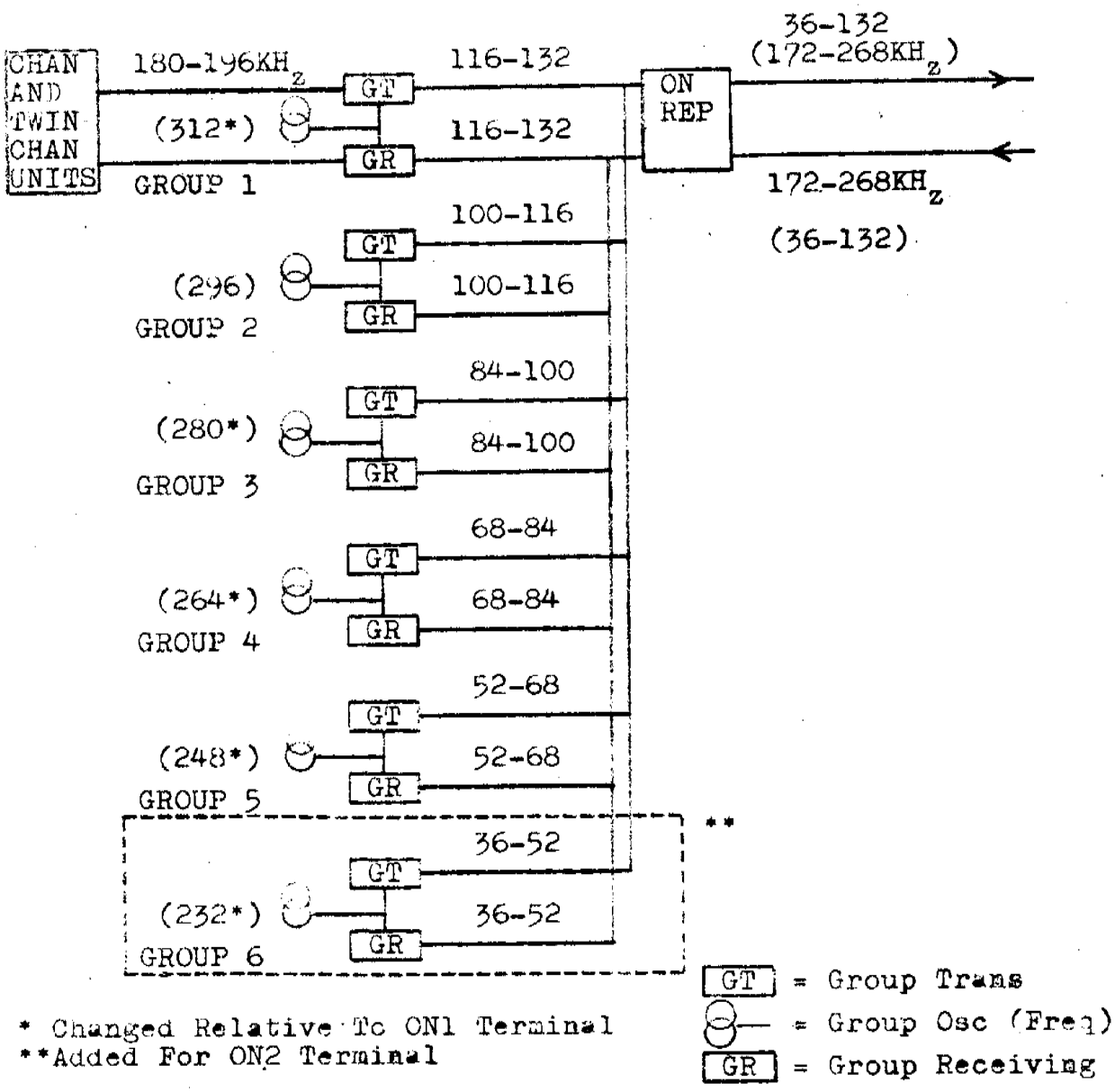

* Changed Relative To ON1 Terminal
**Added For ON2 Terminal

Figure 16-23 Block Diagram of 24 Channel ON2 Terminal

TCI Library: www.telephonecollectors.info

Type

T The "T1" Carrier System, a completely transistorized 24-channel PCM system, is designed to provide an economical facility for short haul trunks primarily in the large metropolitan areas.

In the type "T1" Carrier System, 24 voice channels are combined into a single pulse amplitude modulated (PAM) wave by time division multiplexing. The sampling rate for each channel is 8000 samples per second. The PAM signal is compressed and encoded into a pulse code modulation (PCM) signal for transmission over the line. A 7-digit code is used to represent each PAM sample. At the distant terminal, the received pulse train is decoded, expanded, amplified, and distributed to 24 low-pass filters. The low-pass filters extract the envelope of the received PAM pulses, which is a very close approximation to the original signal.

An additional digit is added to the 7-digit code representing the PAM sample to carry the signaling information. This increases the number of digits per channel to eight and provides a 2-state signaling channel which is adequate for dial pulse and E & M lead signaling. For revertive pulse signaling a 3-state signaling channel is required. The additional state is obtained by using the least significant digit (seventh digit in the code representing the PAM sample) for signaling information while pulsing is in progress.

In a time division system, synchronization of the terminals at the two ends is essential. Synchronization includes both timing and framing. Timing is marking the individual pulse positions or times when a decision must be made as to whether or not a pulse is present. Framing is the process of uniquely marking a particular pulse position so that the individual channel pulse positions are identifiable. The transmitting section of the terminal obtains its timing information from a 1.544-MHz crystal oscillator. The repeaters and the receiving section of the terminal derive their timing from the incoming pulse train.

TCI Library: www.telephonecollectors.info

Type

T Framing is accomplished by inserting a framing pulse position after each group of 24 coded samples. A pulse is inserted in the framing pulse position on every other frame; on the alternate frames the pulse position is left blank. This gives the framing pulse a unique pattern that is seldom duplicated by any other pulse position for more than a few frame intervals at a time.

The signal to be transmitted over the repeatered line consists of a train of pulses. The pulse position repetition rate is 1.544×10^6 positions per second. This is made up of 24 eight-digit codes in each frame (7 for the PAM sample and 1 for signalling for each of the 24 channels) plus 1 framing digit or 193 pulse positions per frame. Since the sampling rate is 8000 times a second, there are 8000 frames transmitted each second. The information in the signal is contained in whether or not a pulse is present in a particular pulse position.

Figure 16-24 is a simplified "T1" system. A system terminal consists of 24 channel units and 29 common equipment units. The channel units contain the signaling converters and connect to two-wire or four-wire trunk circuits. The four-wire type units also contain individual channel amplifiers.

The common equipment includes the compressor, encoder, decoder, expandor, common amplifier, and the digital control circuits. The sampling and demultiplex gates with their associated filters are also considered part of the common equipment, because it is desirable to concentrate these circuits into a few packages located physically close to the remainder of the common equipment in order to reduce lead length. Therefore, the common equipment alone provides 24 complete 4-wire voice channels. The channel units serve only as the matching units between these channels and the external trunk circuitry.

The "T1" carrier system is designed to work on existing types of 19- and 22-gauge paper - or pulp-insulated staggered twist, paired exchange cables. Short sections of 24- and 26-gauge cables may be used if the

TCI Library: www.telephonecollectors.info

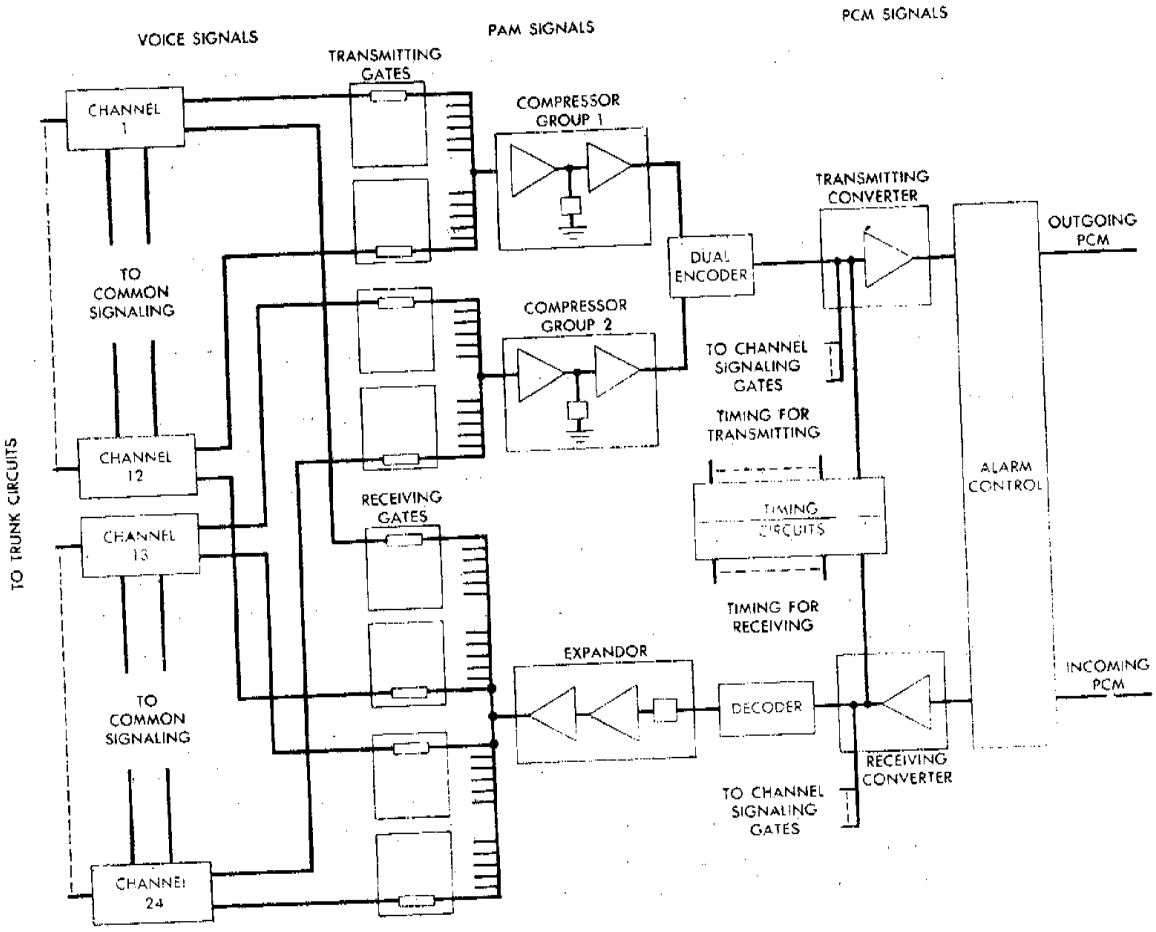

Figure 16-24 T1 Carrier Terminal

Type

T repeater spacing is reduced appropriately. The system will operate over these types of facilities for distances up to at least 50 miles. Two cable pairs are required, one for each direction of transmission.

To reduce the effect of intersystem crosstalk, the particular pulse train selected for the "T1" system uses bipolar pulses. The signal to be transmitted over the repeated line consists of a train of pulses. The information in the signal is contained in whether or not a pulse is present in a particular

TCI Library: www.telephonecollectors.info

Type

T pulse position. Successive pulses, regardless of the number of intervening spaces, are made to be of opposite polarity. However, the significance of a pulse in any particular pulse position is independent of its polarity. Therefore, it is possible to convert from a unipolar pulse train (all pulses of the same polarity) to a bipolar pulse train (successive pulses of opposite polarity) by inverting every other pulse and to return to a unipolar pulse train by full wave rectification.

Attenuation and distortion of the pulse train results from transmission over cables. Since the information is contained in the presence or absence of a pulse in a particular pulse position, the signal is capable of regeneration. Regeneration consists of deciding whether or not a pulse is being received in a particular pulse position and, if one is, of sending out a completely new pulse. Deciding whether or not a pulse is being received entails two things: knowing when to make the decision, i.e., timing, and determining whether or not the received voltage exceeds a predetermined threshold. All of the repeaters in the "T1" system are of the regenerative type.

Timing is accomplished by rectifying the incoming bipolar pulse train to obtain a unipolar pulse train with 1.544×10^6 pulse positions per second. This unipolar pulse train has a strong single-frequency component at 1.544 MHz, which is at exactly the same frequency as the crystal oscillator in the transmitting terminal. This sine wave is used to mark the individual pulse positions.

The pulses are regenerated by blocking oscillators (separate blocking oscillators for the positive and negative pulses of the bipolar pulse train). A threshold bias circuit sets the decision level to regenerate a particular pulse. Both a received pulse above the threshold and a timing pulse from the timing circuit are required to trigger the blocking oscillator.

TCI Library: www.telephonecollectors.info

Type

U The U1 Carrier System, is a new carrier telephone service for customer loops. Using frequency modulation techniques, the system provides an additional two-way, single-party telephone circuit over an existing customer's loop.

A single system for one customer loop consists of only two relatively small transmitter/receiver units. One unit is located in the central office and transmits at 30 KHz; the other unit, called the "subscriber set," transmits at 18 KHz and is located on the customer's premises. A conventional telephone is connected to the subscriber set.

The system has a transmission range of 15,000 feet over nonloaded, 26-gauge, copper conductor pairs (or greater length on coarser gauges equivalent to 40 db loss at 30 KHz), and can transmit either dial pulse or Multifrequency signals and the necessary supervisory signals. A system can provide "second line" service to a single customer, or it can be used to provide the only service to another customer located near an existing customer loop.

The carrier system (added channel) is connected to the existing loop (original channel) through high-pass filters. The original channel remains undisturbed except for the insertion of two low-pass filters. One low-pass filter is included in the subscriber set of the carrier system; the other filter is installed in the central office. When the carrier system serves a separate customer over a working loop (not as second line service to the same customer), an option is available which assures privacy for each customer. When the system is used in this manner, the low-pass filter and two capacitors in the subscriber set are not used, and identical elements are installed outside the customer's premises (on a pole for example). Thus, signals from the original channel are not within reach of the added channel customer. The option protects both customers equally.

TCI Library: www.telephonecollectors.info

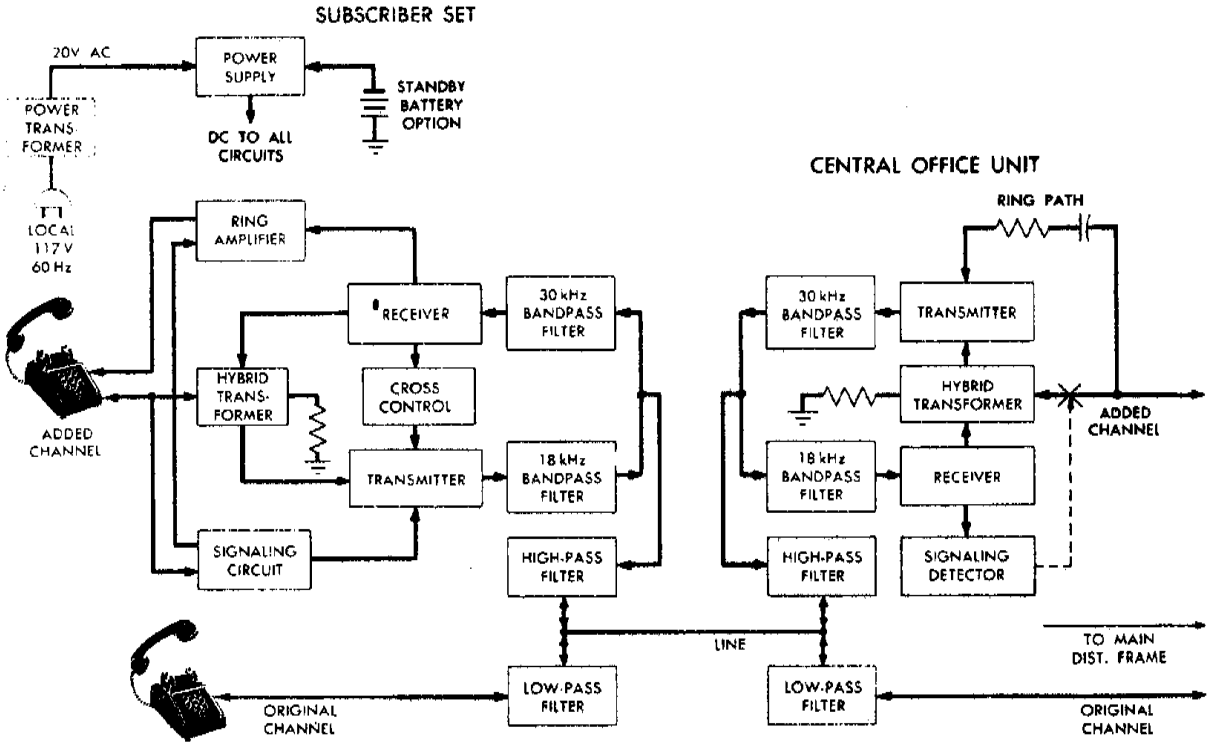

Figure 16-25 U1 Carrier System

Type

U In each unit of the carrier system (see Figure 16.25), the transmitter and receiver are coupled by a hybrid transformer at voice frequencies and by parallel band-pass filters at carrier frequencies. The units are basically similar except for special circuits required for ringing and supervision. The subscriber set also contains a power supply circuit, which obtains its power from the commercial source in the customer's home.

The transmitter in the central office unit consists of a buffer input stage, a 30 KHz carrier oscillator, and a buffer output amplifier. The carrier oscillator

TCI Library: www.telephonecollectors.info

Type

U is modulated by voice frequencies through a bias voltage supplied by the buffer input stage. The dc bias voltage is adjustable so that the carrier frequency can be set to 30 KHz when the unit is manufactured. The buffer amplifier following the carrier oscillator derives the modulated carrier signal through the 30 KHz bandpass filter to the customer loop.

The central office receiver consists of a two-stage preamplifier, an 18 KHz demodulator, a low-pass filter, and an audio output amplifier. When the voice frequency signal is recovered by the demodulator, the low-pass filter passes the signal to the two-stage output amplifier and rejects carrier frequencies.

Dial pulses (transmitted from the subscriber set by interruptions of the 18 KHz carrier at the dial-pulse rate) are recovered by the signaling detector circuit, which responds to the presence or absence of the dc voltage at the output of the low-pass filter. This signal determines the state of a carrier detector transistor, which in turn drives a relay. Contacts of this relay are in the two-wire voice frequency line from the central office. Switching equipment in the central office responds to these relay contacts as the customer goes off-hook or when he dials on the telephone set.

Supervision in the opposite direction is accomplished by modulating the 30 KHz carrier with a portion of the ringing signal. When the telephone set is on-hook, however, the relay contacts in the voice frequency line are open, and there is no continuity from the central office switching equipment to the input of the hybrid transformer. Therefore, to sound the bell of the customer's telephone, a separate, high-loss path is provided from the two-wire line directly to the central-office transmitter. An 85-volt ring signal causes the 30 KHz carrier oscillator to deviate almost 2 KHz.

The subscriber set for the carrier system consists of a transmitter and receiver, similar to those of the central office unit, a cross control circuit, a ring amplifier, a signaling circuit, and a power supply.

TCI Library: www.telephonecollectors.info

Type

U The transmitter has an adjustable dc bias circuit, specifically designed to minimize drifting of the carrier frequency during dial pulsing. The receiver does not require a carrier detector circuit since the carrier signal from the central office is continuously transmitted.

The automatic cross control circuit reduces the probability of "far end" crosstalk between systems when several systems are superimposed on pairs in the same cable and the systems are located at various distances from the central office. The automatic cross control is a clamping circuit between the carrier oscillator and the output buffer stage which adjusts the level of the transmitted signal depending on the level of the received signal. The circuit can reduce the transmitter output to a level 15 db below maximum when the cable loss is zero.

The ring amplifier circuit in the subscriber set is driven from the audio output stage of the receiver. When the telephone set is off-hook, the ring amplifier circuit is disabled. The amplifier in one subscriber set can supply power to sound the bell in as many as three telephones.

A two-transistor network in the subscriber signaling circuit is energized when the telephone set goes off-hook. The circuit supplies power to the transmitter and disables the ring amplifier.

16.10 MICROWAVE RADIO SYSTEMS

The essential elements of any radio system are (1) a transmitter for modulating a high-frequency carrier wave with the signal, (2) a transmitting antenna that will radiate the energy of the modulated carrier wave, (3) a receiving antenna that will intercept the radiated energy after its transmission through space, and (4) a receiver to select the carrier wave and detect or separate the signal from the carrier. Although the basic principles are the same in all cases, there are many different designs of radio systems. These differences depend upon the types of signal to be transmitted, the distances involved, and various other factors, including particularly the part of the frequency spectrum in which transmission is to be effected.

TCI Library: www.telephonecollectors.info

Figure 16-26 is a chart of the radio spectrum indicating at the left the commonly accepted classification of radio frequency ranges; and showing at the right the more important frequency ranges of special interest in current telephone practice. It will be noted that telephone practice makes use of some part of nearly all of the major frequency ranges. It must accordingly employ a corresponding variety of types of radio facility. It is not practicable or desirable to attempt to describe all of these in this book, and what follows will therefore be limited to a brief general discussion of the radio relay systems in the super-high frequency range.

16.11 TD-2 AND TD-3 MICROWAVE RADIO RELAY

A. TD-2 MICROWAVE

Type TD-2 radio is a multichannel, multihop relay system designed to provide facilities for the transmission of television, multiplex telephony, or other wide band communication signals over distances up to 4000 miles. The system operates in the common carrier super high frequency, or microwave band, between 3700 and 4200 MHz and originally was designed to provide a maximum of six wide band channels in each direction of transmission. It is composed of a chain of radio stations or repeaters spaced 20 to 40 miles apart. Provision is made for dropping and picking up radio channels at repeater stations and terminals to make the system adaptable to a nationwide radio network with interconnections to wire lines as required. The six radio channels in each direction are spaced 80 MHz apart, as shown in Figure 16-27, with a 40 MHz difference between the receiving and transmitting channels. Each channel is 20 MHz wide and is suitable for one standard television circuit, or one multiplex telephone band providing several hundred message circuits in one direction of transmission. The audio portion of a television program is not transmitted on the radio channel with the picture signal. Regular program wire facilities are used for this part of the program. The original TD-2 system channel capacity of 600 has been increased by such technological improvements as the Schottky-Barrier diode and Solid-State 3A-FM transmitters so that today 1200 message circuits can be transmitted on a single channel.

TCI Library: www.telephonecollectors.info

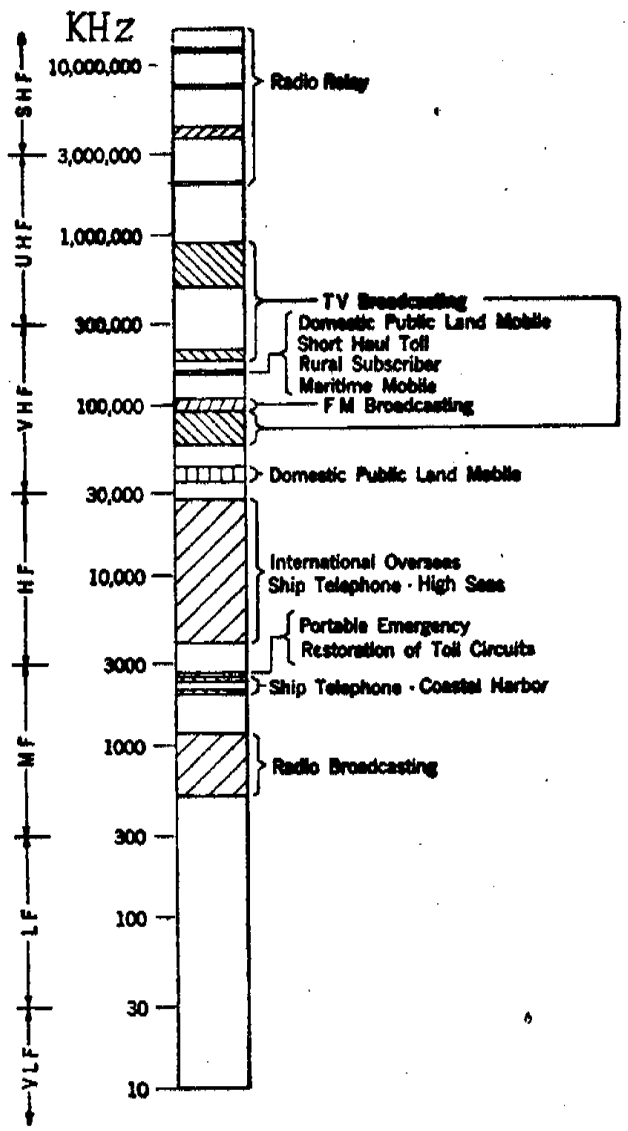

Figure 16-26 Radio Frequency Spectrum

TCI Library: www.telephonecollectors.info

The 20 MHz channels carrier frequencies are allocated as indicated below:

Channel No.		Frequencies (MHz)
	Regular	
1		3730 and 3770
2		3810 and 3850
3		3890 and 3930
4		3970 and 4010
5		4050 and 4090
6		4130 and 4170
	Alternate	
7		3710 and 3750
8		3790 and 3830
9		3870 and 3910
10		3950 and 3990
11		4030 and 4070
12		4110 and 4150

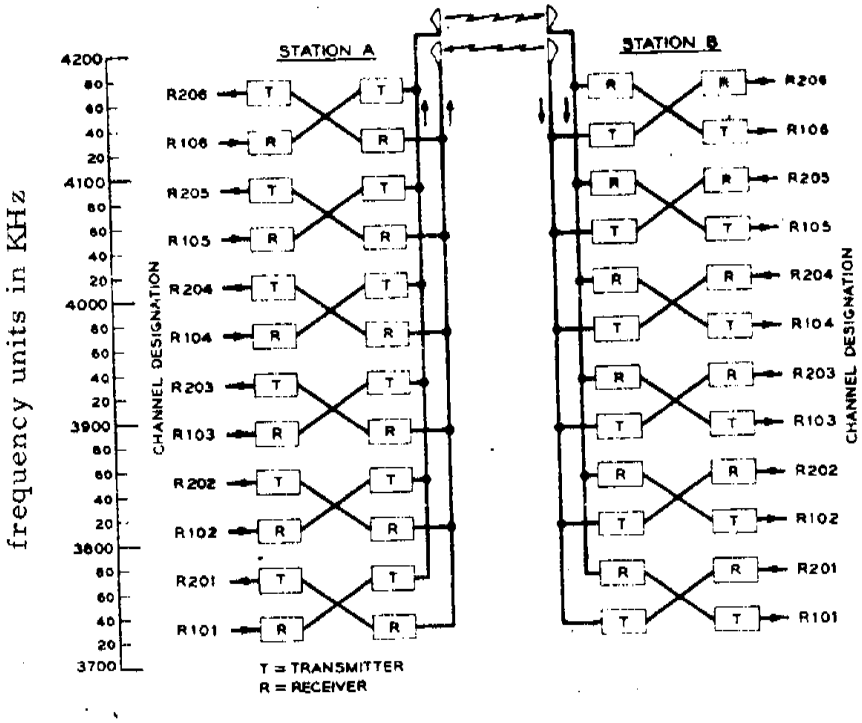

Figure 16-27 Frequency Plan for Six Channels

TCI Library: www.telephonecollectors.info

In the six channel systems the channel carrier frequencies are assigned so that the space between the carrier of a transmitter and the carrier of its nearest receiver operating in the same direction is 40 MHz. This leaves six interstitial bands of 20 MHz each which are essentially empty. In the frequency allocation alternate or "slot" frequencies were established for spur or other routes which intersected existing routes at angles of 90 degrees.

The capacity of the TD-2 system was expanded to twelve two-way channels by making use of different polarizations for the regular and slot frequencies and by means of an I.F. filter which allowed the spacing between carriers to be only 20 MHz. Figure 16-28 shows this 12 channel frequency plan.

One antenna for receiving and one for transmitting is required for each direction of transmission. Thus, for a two-way system at a repeater station without branching or spur facilities, four antennas are required.

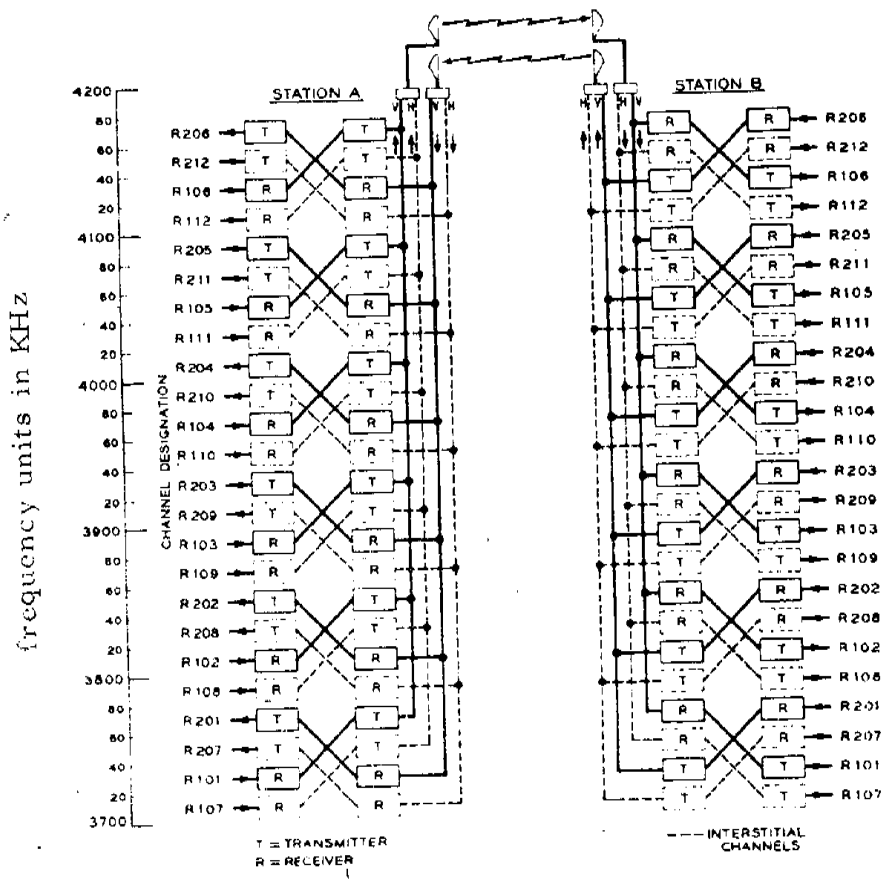

Figure 16-28 Frequency Plan for 12 Channels

TCI Library: www.telephonecollectors.info

On major routes the delay lens antenna, shown in Figure 16-29, was used until about 1954. It was replaced by the horn-reflector antenna shown in Figure 16-30.

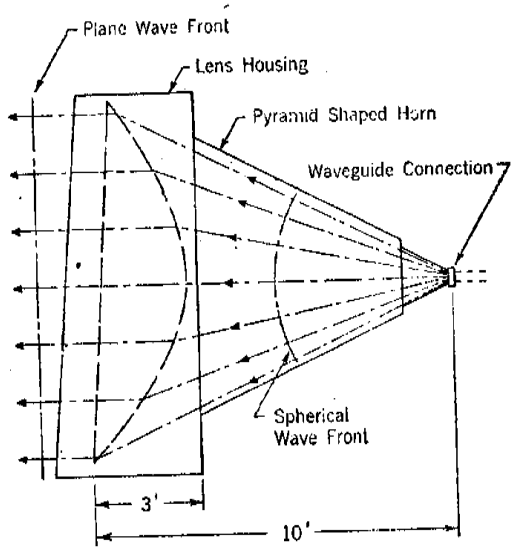

Figure 16-29 Delay Lens Antenna

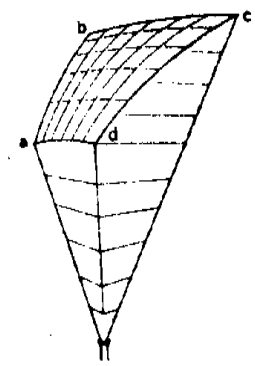

Figure 16-30 Horn-Reflector Antenna

The delay lens antenna is a rectangular cross-section horn approximately 10 feet square and 10 feet deep. The mount of the horn contains a microwave delay lens to converge the radiated energy into a narrow beam. It is designed for the propagation of vertically polarized radio waves only and therefore cannot be used for interstitial channels. It is fed by means of rectangular waveguide at the apex of the horn.

The horn-reflector antenna consists of an electromagnetic horn that illuminates a sector (ABCD) of a large paraboloidal reflector some forty feet in diameter whose focal point is at the apex or feed point of the horn. The antenna will transmit signals of either vertical or horizontal polarization in the 3700-4200 MHz band, as well as in the 5925-6425 MHz and 10,700-11,700 MHz common carrier bands. The antenna measures about 20.5 feet vertically from the apex to the outer edge of the reflector. It is fed by means of a 2.812 inches inside diameter round waveguide at the apex.

TCI Library: www.telephonecollectors.info

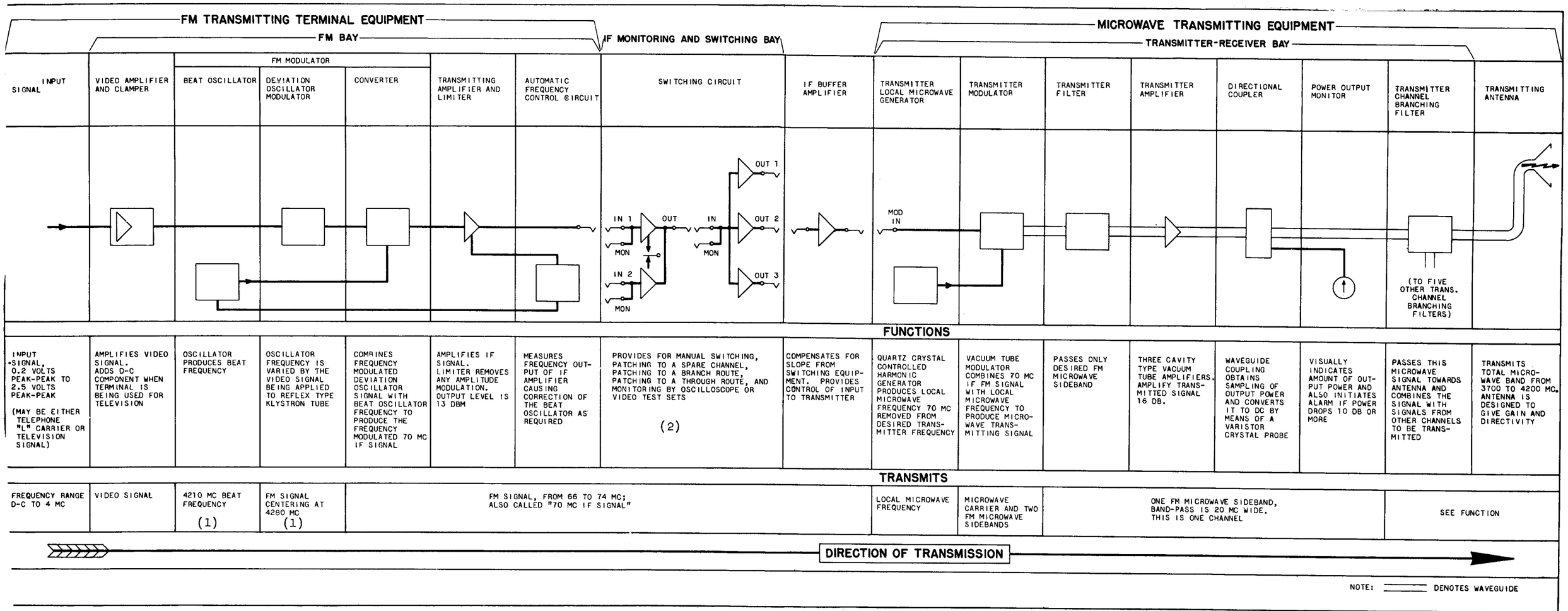

OTES: (1) These are klystron frequencies for vacuum tube FM terminals

(2) 100A Automatic switching, operating at IF frequencies. Permits continuity of service by automatically switching to a standby protection channel in case of failure.

Figure 16-31

TD-2 TRANSMITTING TERMINAL FOR ONE MICROWAVE CHANNEL

TCI Library: www.telephonecollectors.info

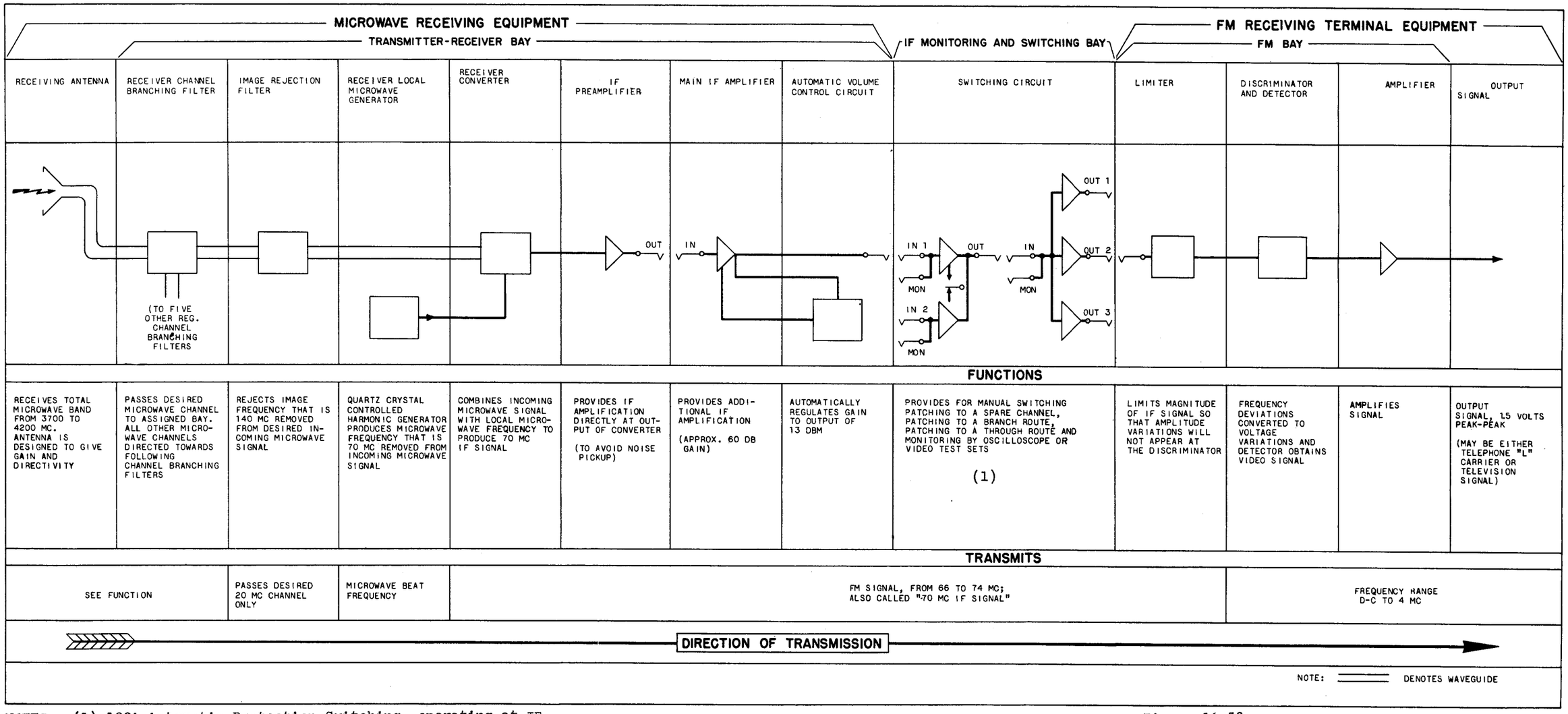

NOTES: (1) 100A Automatic Protection Switching, operating at IF frequencies permits continuity of service by automatically switching to a standby protection channel in case of failure.

Figure 16-32

TD-2 RECEIVING TERMINAL FOR ONE MICROWAVE CHANNEL

TCI Library: www.telephonecollectors.info

Figures 16-31 and 16-32 are block schematics of the TD-2 transmitting and receiving terminals. Since the other microwave systems are similar in basic operation, circuit arrangements will not be shown for any of these systems.

The high reliability demanded of microwave systems requires that protection be provided against fading or equipment failures. The TD-2 Automatic Protection System uses up to two protection channels for up to ten regular channels. Switching is done at IF frequencies in at most a few milliseconds, a time short enough to prevent false operations in the telephone switching plant. A logic system of switch requests and information is maintained between the receiving and transmitting ends over a separate wire or radio facility.

B. TD-3 MICROWAVE

The TD-3 Radio System is designed to carry 1200 telephone circuit loads (or one television channel load) on each of the ten working and two protection two-way channels provided by the 4 GHz frequency plan, with 41 dbrnc0 noise performance on 4000 mile systems. It has an RF channel width of 20 MHz and spaced 20 MHz center to center, with alternate channels cross-polarized. Ordinarily one protection channel will be used on systems equipped with up to 5 working channels, and a second protection channel added when 6 to 10 working channels are installed. The microwave equipment is constructed with solid state components, except for a traveling wave tube in the transmitter amplifier. Power for all of the equipment is obtained from a 24 volt battery power plant.

The TD-3 is designed primarily for long-haul applications, and is compatible in most respects to the TD-2 system. However, there are certain advantages over that of the TD-2 system, such as better noise performance, improved fade margin, and better stability and equipment reliability. The output power will be between 5 and 10 watts, with 5 watts the lower maintenance limit.

The alarm circuit arrangements for TD-3 are similar to those used for TD-2 except that the TD-3 transmitter-receiver bay includes an alarm panel containing relays which provide an interface between the bay and external alarm circuits; the TD-3 is also arranged for use with an aisle pilot visual alarm system.

TCI Library: www.telephonecollectors.info

16.12 TE MICROWAVE RADIO RELAY

The TE microwave radio relay system was designed for short haul transmission of television service. The TE system operates in a 3700 to 4200 MHz band. A maximum of six one-way channels or three two-way channels may be obtained. Channel bandwidth is 20 MHz and frequency modulation is used. A portable arrangement of the TE system is used for video pickup at a temporary location, or path testing. Limited to 35 miles and +24.8 dbm RF output power, the system sees little use today.

16.13 TH RADIO SYSTEM

TH-1 radio is a microwave system designed to provide long-haul facilities suitable for handling television, multiplex telephone or any other wide-band communication signals. The system operates in a common carrier band between 5925 and 6425 MHz.

The system is set up to provide a maximum of eight broadband radio communication channels and two narrow-band auxiliary channels in each direction of transmission. At a normal repeater point, this will mean a 2-way system with a maximum of eight broadband channels in each direction, six of which are available for regular use, and two reserved for protection.

Each broadband channel accommodates a baseband signal of approximately 10 MHz which may comprise up to 1,800 message channels. Although the system bandwidth is large enough, TH-1 radio is not usually used for television transmission because of economic considerations.

The TH system also uses the horn-reflector antenna and circular wave-guide. Therefore, a TH system may be added to an existing TD-2 route if all the stations on this route are equipped with horn-reflector antennas.

An automatic protection switching system was developed for use in conjunction with the TH system to assure that transmission performance will be maintained at the desired level despite fading and equipment troubles.

The TH system differs from the TD-2 system in having an auxiliary channel for automatic switching and radio order, alarm and control purposes as an integral part of the system.

TCI Library: www.telephonecollectors.info

On each TH broadband channel frequency modulation is employed. The narrow band auxiliary radio order channel uses amplitude modulation. Higher power on the broadband channels is obtained through the use of traveling wave tubes.

Figure 16-33 illustrates the frequency plan for the TH system. This plan provides for a maximum of eight broadband and two narrow band auxiliary channels in each direction. Channels 11 to 18 and 21 to 28, inclusive, are the broadband FM channels for TV, telephone or telegraph services. Channels 10, 19, 20 and 29 are the narrow band AM auxiliary channels for order, alarm and short haul toll circuits.

Note that all transmitting frequencies are located at one end of the 5925-6425 MHz band and the receiving frequencies placed at the other end. The auxiliary channels are situated in the guard band between the broadband transmitting and receiving frequencies as well as in the guard bands between the TH system and other services in adjacent bands. Note also that adjacent broadband channels are alternately polarized to minimize crosstalk. Cross polarization permits overlapping channels slightly so that the effective frequency use is 514 MHz in a band only 500 MHz wide.

The TH system uses a single carrier supply which will furnish ten transmitting and receiving beat frequencies for 16 broadband receivers, 16 broadband transmitters, 4 narrow band auxiliary transmitters and 4 narrow band auxiliary receivers. All frequencies are derived from a 14.83 MHz crystal by suitable multiplications and additions.

By making each component of the carrier supply serve as many channels as possible, a minimum amount of equipment will be needed.

While the TH-1 system was designed around a large amount of common equipment, with transmitters and receivers in separate bays, the TH-3 system has transmitter-receiver bays which are completely self-contained and will not require additional common equipment other than the antenna system. The TH-3 system has been designed to satisfy the requirements of both long and medium haul applications.

TCI Library: www.telephonecollectors.info

The TH-3 system is also provided with all solid-state electronic components except for a 10-watt traveling wave tube at the transmitter output. At the receiver modulator input stage a low noise Schottky Diode Down-Converter is furnished. The IF main amplifier and AGC circuitry, of the TH-3, is the same as the solid state components used in the TD-3. Other portions of the TH-3 are also very similar to those of the TD-3. Benefits of the solid state components include decreased noise, increased reliability and a reduction in the power consumption, which eliminates the need for a forced-air cooling system. The TH-3 system was designed for a performance objective of 41 dbrnc0 total noise over a 4000 mile range.

The basic features of the TH-1 and TH-3 systems are outlined below:

Feature	TH-1	TH-3
(1) Frequency Plan	High-Low Bands, in Transmitter and Receiver	Same
(2) Antenna System	Horn Reflector	Same
(3) Repeater	10-Watt (Electron Tube)	10-Watt (Solid State, except Traveling Wave Tube)
(4) Protection	TH(1) Switching System Initiated by Monitoring Carrier at each Repeater	Similar to 100A System
(5) FM Terminals	New Solid State Terminals have superseded the original klystrons and electron tubes	3A FM Terminal Transmitter and 3A or 4A FM Terminal Receiver (All Solid State - same as TD-3)
(6) Auxiliary Channel Facility	Special Radio Channel Designed as part of the system	Standard Voice Frequency Facilities

TCI Library: www.telephonecollectors.info

Feature	TH-1	TH-3
(7) Wire Line Entrance Links	TH Message Connecting Link	3A Solid State Wire Line Entrance Link - Same as TD-3
(8) Power	230V AC Inverter Plant	24V DC (Same as TD-3)
(9) Air Conditioning	Required to Maintain 75° ± 10°F	Required to Maintain 75° + 20°F. No Humidity Control. Dry Air to be Blown into Waveguide Filters and Networks
(10) Microwave Networks	Conventional Channel Dropping Networks and Filters	New Directional Filter Approach
(11) Receiver Modulator	Conventional Point Contact Diode	Low Noise Schottky Barrier Diode
(12) IF Circuitry	Electron Tube at 74.1 MHz	TD-3 Solid State Circuits at 70 MHz
(13) RF Amplifier	10-Watt Traveling Wave Tube with Large Magnetic Structure and Forced Air Cooling	10-Watt Traveling Wave Tube with Small Magnetic Structure and No Forced Air Cooling
(14) Microwave Carrier Supply	Electron Tube Multiplier Stages and Traveling Wave Tube for +39 DBM Output	Transistor Amplifier-Multiplier Stages and Varactor-Multiplier for +21 DBM Output (Same as TD-3 up to 1,000 MHz Stage

16.14 TJ RADIO SYSTEM

The TJ Microwave system provides short haul line-of-sight facilities for frequency modulated microwave transmission of monochrome or color television signals, multiplex telephony, or other broadband communication signals. The

TCI Library: www.telephonecollectors.info

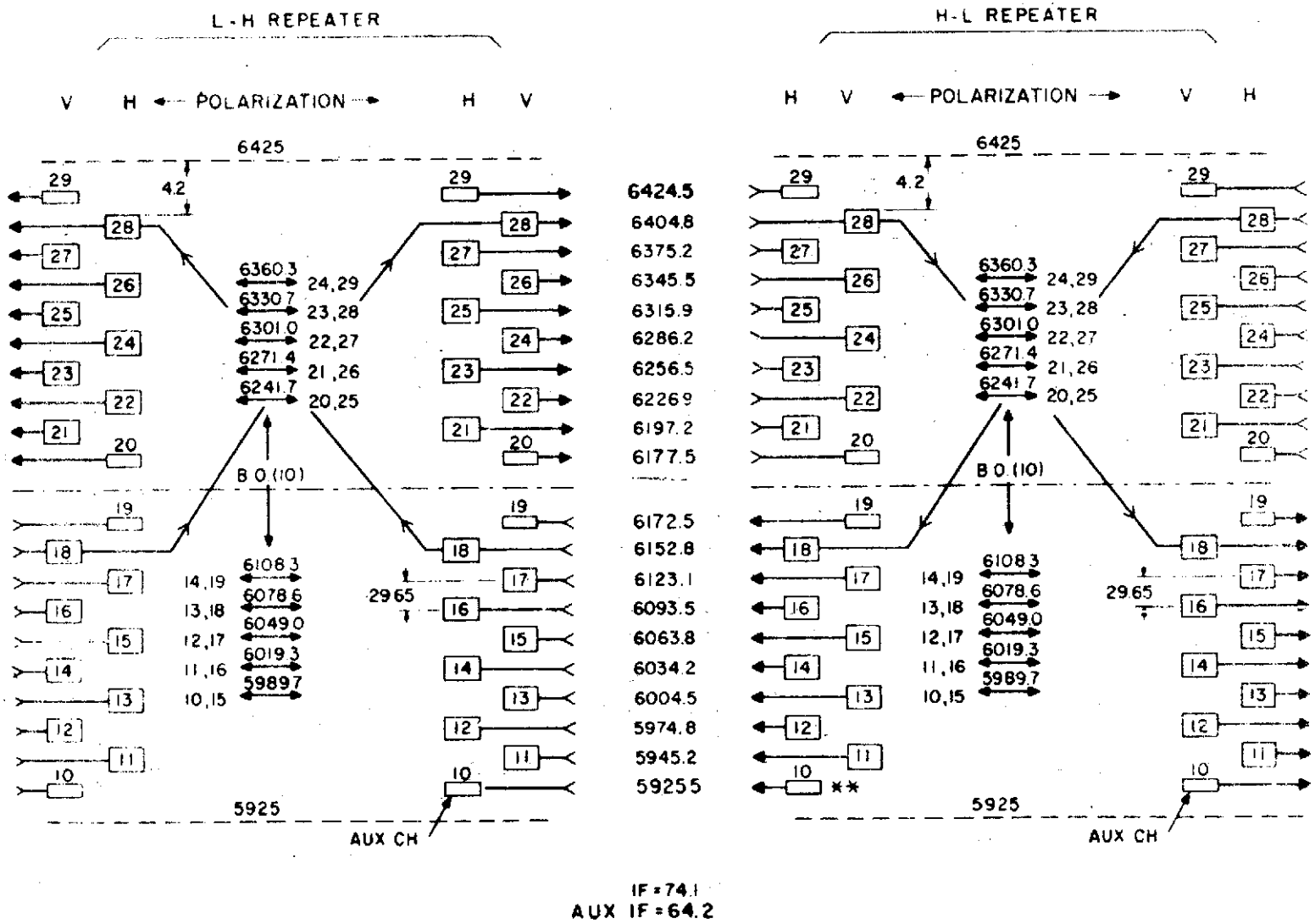

frequency units in MHz

Figure 16-33 TH Radio System, Frequency Allocation and Polarization Plan

TCI Library: www.telephonecollectors.info

system operates in the common-carrier frequency band between 10,700 and 11,700 MHz and provides as many as six broadband 2-way communication channels. The number of message circuits obtainable in a single broadband channel of TJ radio is a function of many variables. The length of the system, its signal-to-noise ratio, fading margin, intermodulation products, the delay equalization, and the permissible degradation of transmission are some of the more important factors.

In TJ radio, each 2-way broadband channel is designed to transmit 96 ON2 type message circuits, or 600 L carrier message circuits over 10 hops. Suitable outside supplier message carrier equipment may also be used. In television service each radio channel is designed to transmit one standard monochrome or NTSC color television signal over six hops for a distance of about 100 miles. The repeater spacings for either message or television application will average between 15 and 25 miles, depending upon the terrain, over-all system economics, fading, the expected rate of rainfall, and other microwave considerations.

For maximum reliability and protection against multipath fading and equipment failure the TJ radio system can be operated as a one-for-one frequency diversity system. In this system channels are used in pairs and a diversity switch and transmission unit provides facilities for comparing the signals from both channels and through a logic or control circuit determines which channel should be used. When operated in this manner, as it is for general Bell System use, a fully loaded system provides three working and three protection channels in each direction of transmission.

The basic element of the TJ system is the transmitter-receiver bay which includes a transmitter, receiver, and associated power supply operating from 117 volts AC.

The Western Electric type 445A Reflex Klystron oscillator is the heart of the TJ transmitter. This klystron has a normal operating frequency range of 10.7 to 11.7 GHz with a nominal power output of 1/2 watt. The klystron is air cooled by a blower. The 445A is essentially a single cavity klystron which produces an F.M. signal by application of an amplified baseband signal to its repeller.

TCI Library: www.telephonecollectors.info

The repeaters consist of a transmitter and receiver for each channel. The receiver reduces the incoming signals to 70 MHz IF, and again to baseband or video frequencies. The baseband frequencies in turn, modulate the transmitter for transmission to the next station. By reducing the signals down to baseband frequencies instead of just the 70 MHz IF frequencies as in the TD-2 system, message circuits may easily be dropped or inserted at each repeater.

The radio signals are transmitted to a dual polarized antenna by RF channelizing and duplexing arrangements. Many systems use a "periscope" type of antenna arrangement to minimize the loss associated with long waveguide runs. Such a system uses a paraboloidal antenna at the base of the tower directed at a plane or a "dished" reflector at the top of the tower. In addition, an 11,000 MHz systems-combining network is available so that the TJ system may utilize the horn-reflector antennas installed on TD-2 and TH backbone routes.

One of the TJ frequency plans is shown in Figure 16-34. Because of the use of the "periscope" antenna system, the plan is based on the use of four frequencies for each two-way radio channel. The 10,700- to 11,700-MHz common carrier band is divided into 24 channels, each about 20 MHz wide. In a given repeater section, only 12 of these are used, resulting in 80-MHz spacing between midchannel frequencies. These channels are divided into two groups of six for transmission in each direction. The polarization of the channels alternates between vertical and horizontal to provide 160-MHz separation between signals having the same polarization, thereby substantially easing requirements on the channel-separation networks. The remaining 12 channel assignments are used in adjacent repeater sections. These frequencies are repeated in alternate hops. Potential "overreach" interference is reduced by reversing the polarization of the third section with respect to the first section. Co-channel interference from adjacent repeater stations, a necessary consideration in the TD-2 and TH systems because of their use of the two-frequency plan, is eliminated in this system by the use of the four-frequency plan. At a given repeater, adequate frequency separation between transmitters and receivers is achieved by using the upper half of the band for transmitting and the lower half for receiving. This arrangement is naturally inverted at alternate stations.

TCI Library: www.telephonecollectors.info

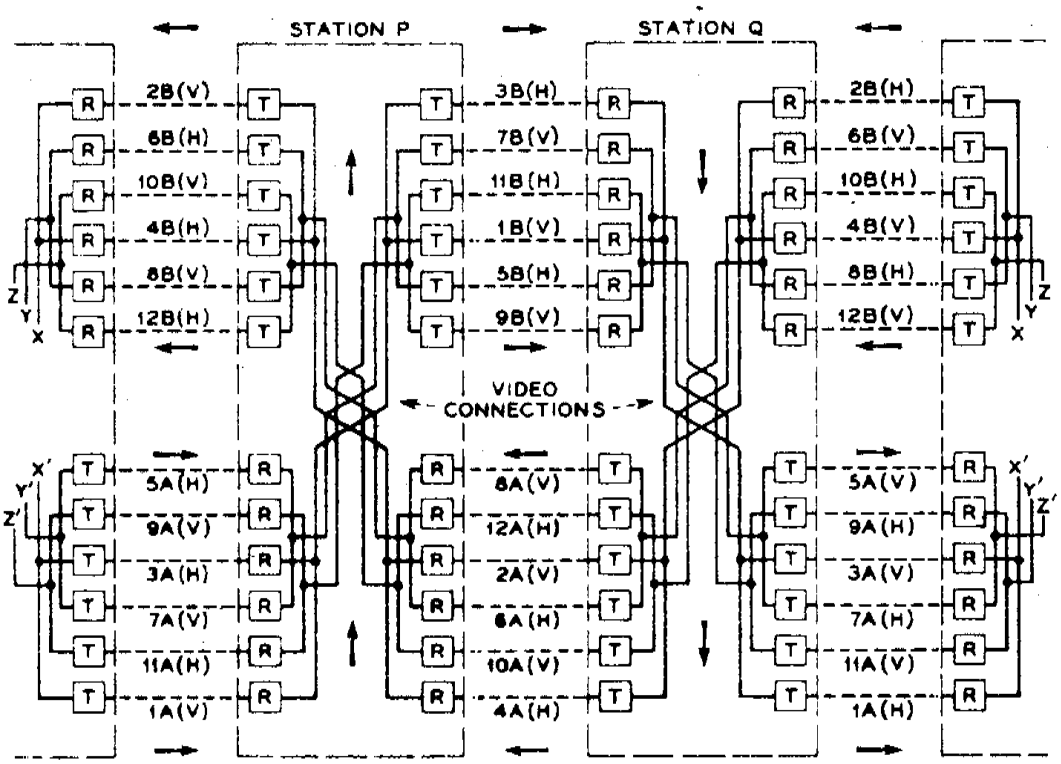

Channel Number	Transmitter Frequency,	Beat Oscillator Frequency,	Channel Number	Transmitter Frequency,	Beat Oscillator Frequency,
4A	10.715	10.785	9B	11.245	11.315
1A	10.755	10.825	12B	11.285	11.355
10A	10.795	10.865	5B	11.325	11.395
11A	10.835	10.905	8B	11.365	11.435
6A	10.875	10.945	1B	11.405	11.475
7A	10.915	10.985	4B	11.445	11.515
2A	10.955	10.885	11B	11.485	11.415
3A	10.995	10.925	10B	11.525	11.455
12A	11.035	10.965	7B	11.565	11.495
9A	11.075	11.005	6B	11.605	11.535
8A	11.115	10.045	3B	11.645	11.575
5A	11.155	11.085	2B	11.685	11.615
	GHz	GHz		GHz	GHz

Figure 16-34 TJ Frequency Assignment Plan

TCI Library: www.telephonecollectors.info

The channels in the lower half of the total frequency band are designated Group A. The channels are numbered 1A to 12A. The channels in the upper half of the band are designated B and are numbered 1B to 12B. All channels transmitting North or East have odd numbers. All channels transmitting South or West have even numbers. All channels transmitting in one direction on a specific hop are designated A, in the opposite direction B and on adjacent hops this is reversed. Another frequency plan uses frequencies midway between those shown in Fig. 34, and is known as the "staggered" plan.

16.15 TL RADIO SYSTEM

With the advent of high frequency solid-state devices, a new, lower cost, short haul system in the 11 GHz range was introduced. With the exception of transmitter and receiver klystrons, the TL-1 system used solid-state circuitry throughout and required considerably less power than the tube type TJ system.

The TL-1 system was introduced as a low cost, reliable system capable of handling 240 message circuits for 250 miles over 10 hops. Even as this new system was beginning its service to the Bell System, more circuit capacity was required. The short haul radio field, originally conceived as lightly loaded routes, faced a rapidly growing demand in data, commercial and educational TV, and message circuit transmission.

The TL-2 system was developed as a 600 message circuit system. It was followed shortly by a companion system in the 6 GHz range called TM-1.

16.16 TL-2/TM-1 DIVERSITY SYSTEM

Both the TL-2 system, operating in the 11 GHz range, and the TM-1 system, operating in the 6 GHz range, are capable of handling 600 message circuits for 250 miles over 10 hops. A crossband diversity arrangement provides improved reliability. In this arrangement a pair of channels, one at 6 GHz and one at 11 GHz, are used together for the same transmission. A diversity switch is used at the receiver to select either channel.

TCI Library: www.telephonecollectors.info

A bistable diversity switch can be used to select the best channel where performance of the two channels is comparable. A revertive diversity switch can be used to favor a preferred channel in the event one of the channel pair has superior performance.

The advantages of crossband diversity using 6 GHz and 11 GHz channels over in-band diversity using two channels in either the 6 GHz or 11 GHz range lie in the greater freedom from rain fades in the 6 GHz range and in the greater freedom from congestion in the 11 GHz range. Although the nominal repeater spacing is about 25 miles, a TM-A1 traveling wave tube power amplifier can be used to increase the power output of the TM 1 system from +20 dbm to +33 dbm where conditions warrant.

The number of two-way diversity channels which may be provided depends upon several factors. When dual-frequency parabolic antennas are used only one polarization at 6 GHz is possible, limiting the crossband channel pairs to four two-way pairs. When the horn-reflector antenna is used, both polarizations are available in both the 6 GHz and 11 GHz range, making six two-way crossband diversity channels possible.

Basically, the normal TL-2 frequencies are the same as TJ, and the normal or split channel TM-1 plan provides two TM-1 channels in the frequency space allotted to each TH channel. There are also staggered plans for both TL-2 and TM-1. The staggered plan provides less TM-1 channels but locates them midway between TH channel assignments to minimize interference in the case of crossing routes. A co-channel plan is also used where TH and TM share the same route.

One of the interesting innovations of the TL and TM systems is vapor phase cooling. To meet the frequency accuracy requirements of the system (± 0.02 percent for TM-1), the temperature sensitive klystrons must be kept in a range of ± 3°F, during an ambient temperature change of 100°F. (Over a nominal 3-month maintenance interval the ambient temperature is not likely to exceed a 100°F variation.)

TCI Library: www.telephonecollectors.info

To meet these stability requirements, a pair of klystrons are clamped to the sides of a copper boiler. The boiler is filled with a heat transfer fluid that absorbs the heat from the klystrons by boiling. Vapor from the boiling liquid is led off, condensed and returned to the boiler. The condenser is connected to a heat sink and a bladder whose expansion and contraction reduces pressure changes in the system.

The TM-1 vapor phase cooler is a refined version of the earlier TL-2 design. Laboratory tests show this system is capable of holding the klystrons to a range of $\pm 1^{o}F$ for an ambient temperature range of 100 F. A $\pm 3^{o}F$ klystron range may be expected over a 3 month maintenance interval due to both ambient temperature and ambient pressure changes.

TCI Library: www.telephonecollectors.info

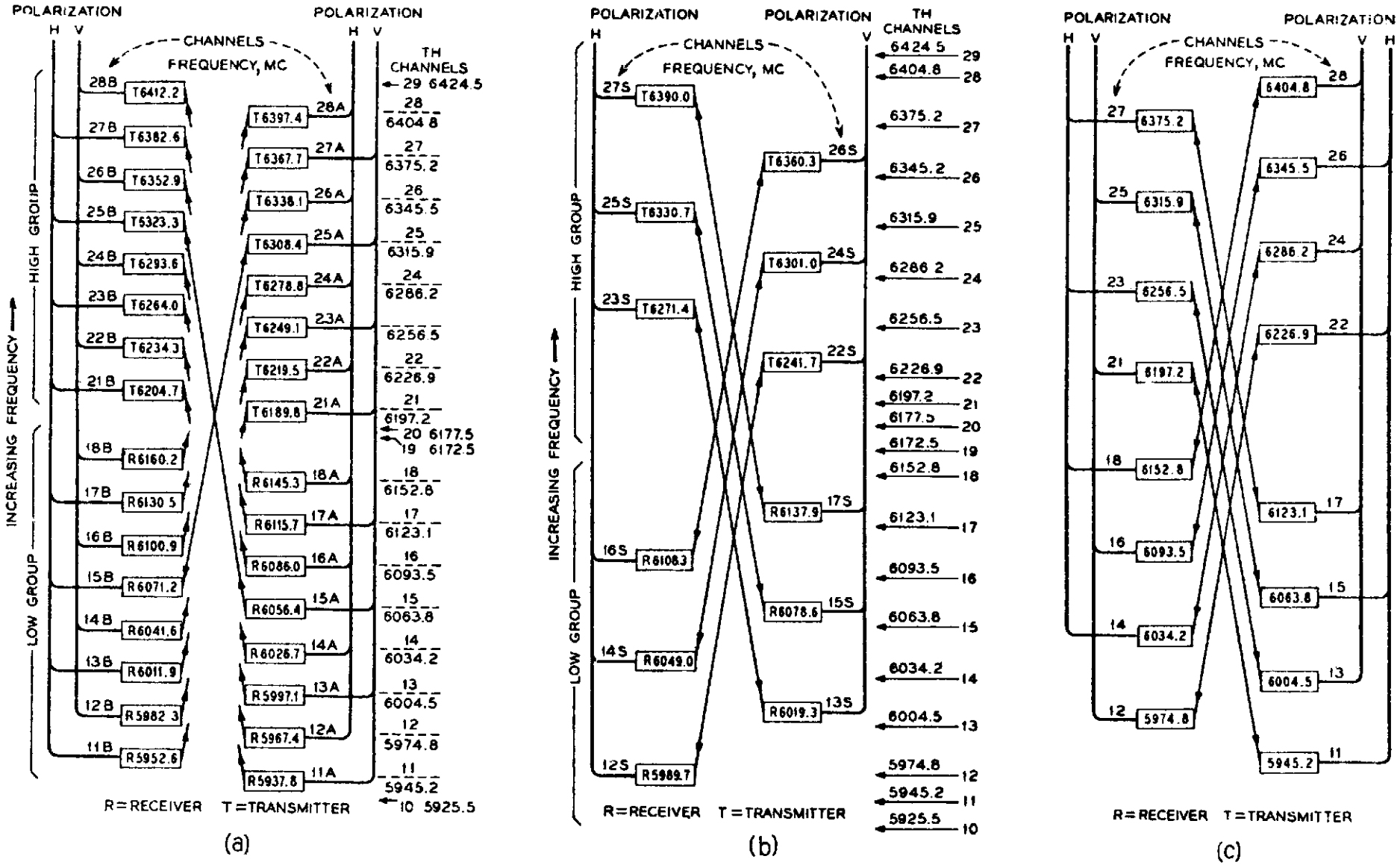

— Frequency plans—TM-1 microwave high-group transmitting repeater; (a) normal channel frequency plan, (b) staggered channel frequency plan, (c) co-channel frequency plan.

Figure 16-35

TCI Library: www.telephonecollectors.info

CHAPTER 17

VOICE FREQUENCY REPEATERS

17.1 INTRODUCTION

A modern voice frequency repeater is an arrangement of electron tube or solid state amplifiers and associated apparatus capable of receiving a voice frequency current and from either side and retransmitting it, without appreciable distortion, at a greater magnitude. The energy required to produce the output currents is obtained from local sources at the repeater and is released under the control of the received currents. A repeater, then, is a two-way amplifier with some associated circuitry.

Telephone repeaters are an essential factor in our present system of long distance telephone communication. They are used:

1. To extend the range of transmission.
2. To provide a more economical means of transmission by employing inexpensive lines with repeaters instead of expensive lines without repeaters.
3. To improve the standards of volume and quality over long distance telephone lines.

For satisfactory telephone communication, there must be sufficient energy transmitted over the line to provide adequate sound volume at the receiving end. If we attempted to transmit energy over a 1,000 mile 19H44 cable circuit of approximately 480 db loss without any means of boosting the transmitted power along the line, an input power of one milliwatt at the sending end would be attenuated to 10^{-51} watt at the receiving end. If we were to attempt to increase the power received to a value equal to that of the power sent (one milliwatt) by means of a single amplifier or repeater inserted anywhere in the circuit, we would have to use a device capable of amplifying power by 10^{48}. Such an amplifier is, of course, a practical absurdity. However, by placing repeaters on cable circuits at intervals of about 50 miles, the power may be restored by each one in steps of practicable size.

The first successful telephone repeater was invented by a Bell System engineer, H. E. Shreeve, and was tried out successfully on a circuit between Amesbury, Mass.

TCI Library: www.telephonecollectors.info

and Boston in 1904. An improved form of this mechanical repeater, consisting of an amplifier made up of mechanically coupled receivers and transmitters, was commercially operated in the latter part of the same year on a circuit between New York and Chicago. Since the invention of the vacuum tube the use of repeaters has steadily increased, resulting in the economical extension of telephone service over distances which previsously could not be connected satisfactorily at all.

17.2 TYPES OF TELEPHONE REPEATERS

Repeaters can be divided into three types: (a) through line repeaters; (b) switched-in line repeaters; and (c) cord circuit repeaters. Through line repeaters are permanently associated with a particular toll line; switched-in repeaters are automatically associated with a particular toll line as the result of special operations; cord circuit repeaters, before becoming obsolete, could be associated with any connection for which they were specified by the toll board operator by means of switch-board cords.

In general, telephone repeaters use two one-way amplifiers to provide transmission gain and are equipped with regulating devices for adjusting gain to meet operating requirements. Hybrid coils are used for adapting one-way amplifiers to two-way transmission. A balancing network is employed to approximate closely the impedances of each line of the circuit and its transmitted associated frequency band, thereby maintaining the degree of balance required for the proper functioning of the hybrid coil. That is, energy (at voice frequencies) from the output of one amplifier of a repeater must be prevented from reaching the input of the other. This would impair the quality of the transmission, or even cause "singing." Filters are used to filter out unwanted frequencies. Other miscellaneous apparatus and circuit features are used to adapt the repeater circuit to standard operating practices and become more or less a part of the repeater.

The function of such equipment is to: match impedance; connect 2-wire to 4-wire lines; compensate for unequal attenuation at different frequencies; adjust for variations in attenuation due to varying conditions; by-pass low-frequency or d-c signaling; and device phantom channels separately. The selection of this apparatus is sometimes determined more by the line to which it is assigned than by the amplifier with which it is used. For example, the repeater is designed to have a nominal impedance (e.g. 600 ohms), so the repeat coils (for matching impedance of repeaters and lines)

TCI Library: www.telephonecollectors.info

have different ratios because of different line impedances. Also, low-frequency ringing does not pass through the amplifier at all, so that means of deriving the signaling circuits are controlled by the line not by the amplifier.

The maximum overall gain of repeaters is limited by the amplifiers used, but adjustments, for example, by means of the slide-wire potentiometer and resistance pads, can bring this overall gain to any lower value. It is well to remember, however, that one-half of the energy is lost each time it must pass through a hybrid coil circuit. This means that the actual gain of each amplifying element must be at least 6 db greater than the overall gain required. This is recognized in the calibration of the repeater potentiometers.

The various types of through line repeaters used by the Bell System are as follows:

1. Reading - high impedance repeater for heavy loaded H245-155 facilities; initially used at Reading, Pa.; mostly floor type, but some of later ones were relay rack type. Obsolete

2. 21 - one-amplifier repeater for 2 directional use at exact mid-point of a two-wire circuits; used for service observing boards. Also obsolete.

3. 22A1 - two-amplifier repeaters for use on two-wire circuits. Superseded by V3.

4. 22A2 - two-amplifier repeater for use on high cut-off two-wire facilities, especially B88-50 facilities; modified 22A1. Superseded by V3.

5. 24A1 - two-amplifier repeater for use on 2-wire to 4-wire circuits. Superseded by V3.

6. 44A1 - four-amplifier repeater for use on four-wire circuits. Superseded by V3.

7. V1 - two one-way amplifiers with repeating coil hybrids for use as a 2-wire repeater, 4-wire repeater, or as a 2-wire to 4-wire repeater. Superseded by V3.

8. V2 - similar to V1, except for use with 48 volt filament and plate supply at small installations in offices having no 130-volt power plant.

TCI Library: www.telephonecollectors.info

9. V3 - two small compact, plug-in type amplifiers designed to replace the V1.

10. V4 - two transistorized plug-in amplifiers with associated plug-in terminating sets and equalizers designed to replace the V3.

11. E1 - miniature single amplifier, two-way negative impedance repeater for use primarily on exchange area trunks and special services.

12. E2 - an equipment redesign of the E1 employing plug-in type units as series elements.

13. E3 - a plug-in unit similar to the E2 but used as a shunt element between the midpoints of the E2 coils or across the line at either side of the line winding of the series element.

14. E6 - a transistorized plug-in type, designed to replace the E23.

15. E7 - is a transistorized shunt type repeater intended for operation on 2-wire nonloaded lines for certain types of service.

17.3 22-TYPE REPEATER

Figure 17-1 is a schematic of a telephone repeater known as the 22-type. As will be observed, the amplifier units in this arrangement are triodes connected with transformers in both input and output circuits. The drawing also shows the connections of the hybrid coil output transformers with their balancing networks; and the potentiometers in the input circuits for controlling the amplifier gains. Equalizing networks are inserted at the midpoints of the low-impedance sides of the input transformers; and low-pass filters are included in the output circuits to prevent the passage of high frequencies not essential for voice transmission. The maximum overall gain of this repeater is approximately 19.5 db when the potentiometers are on top step, but the gain of the amplifying units themselves must be higher than this to overcome the losses in the hybrid coils and other circuit elements. The gain is essentially flat over the frequency range from about 200 to 3,000 Hertz.

TCI Library: www.telephonecollectors.info

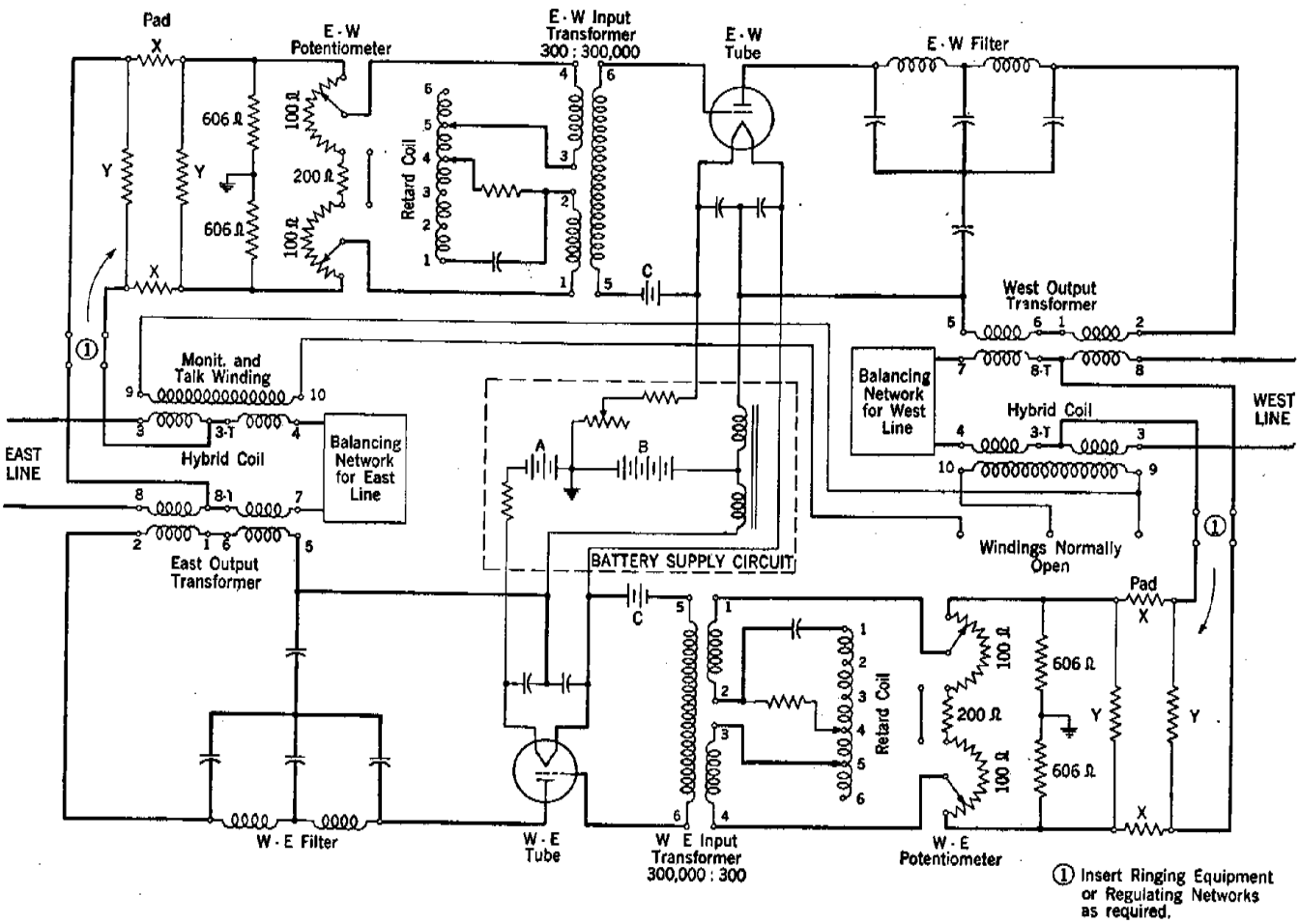

Figure 17.1 22-Type Telephone Repeater Circuit

TCI Library: www.telephonecollectors.info

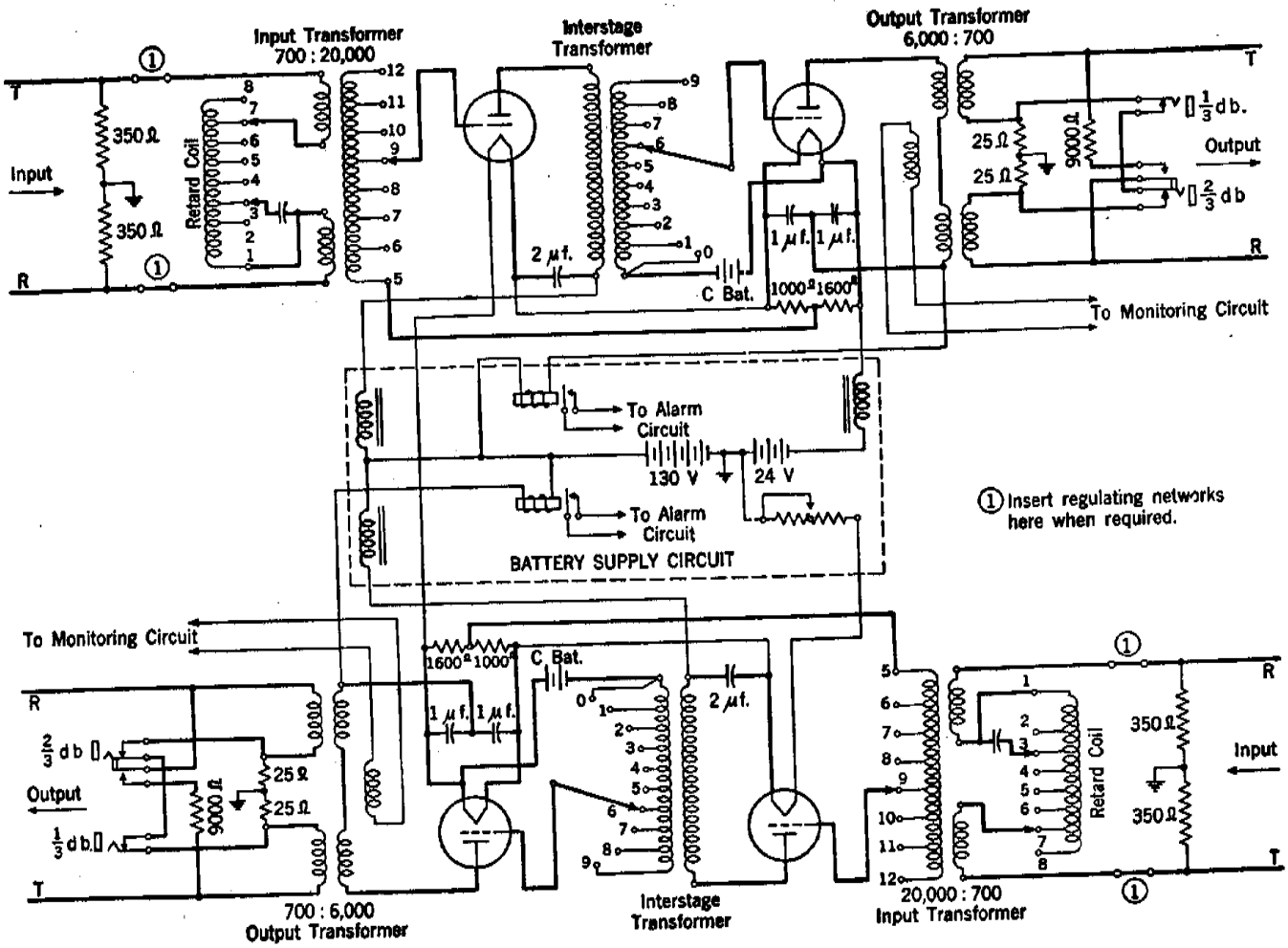

Figure 17.2 44-Type Telephone Repeater Circuit

TCI Library: www.telephonecollectors.info

17.4 44-TYPE REPEATER

For 4-wire circuits, the repeater corresponding to the 22-type repeater is known as the 44-type. In this case, the circuit itself is double-tracked so that there is no necessity for using hybrid coils except at the circuit terminals where the 4-wire circuit is converted to a 2-wire for connection to the switchboard. There is therefore no need for line balancing networks at repeater points, and little possibility of a "singing" path around the individual repeater. For this reason, 4-wire repeaters may generally be operated at higher gains than 2-wire repeaters.

The circuit arrangements of the 44-type repeater are illustrated schematically by Figure 17-2. It will be noted that each amplifier has two triode stages, the first tube acting as a voltage amplifier and the second as a power amplifier. Transformers are used for interstage coupling, as well as in the input and output circuits. The gain is controlled by adjustable steps on the secondary windings of both the input and interstage transformers. The shape of the gain-frequency characteristic is controlled by an equalizing network connected in series at the midpoint of the primary of the input transformer. The maximum overall gain of this repeater is 42.7 db and is flat to frequencies well above 3,000 Hertz.

Where extremely stable amplifier operation is required, as for example in the repeaters of telephotograph circuits, the 44-type repeater may be modified for operation with negative feedback. This reduces the maximum overall gain to about 38 db. Feedback is from an output unit made up of capacitors and resistors inserted between the second-stage tube and the output transformer, to a similar input unit inserted between the input transformer and the first-stage tube.

17.5 V-TYPE REPEATER - GENERAL

Another and more recent design of the voice-frequency telephone repeater is known as the V-type. It differs from the 22- and 44-types considerably, both with respect to the amplifiers themselves and the associated equipment arrangements. Figure 17-3 shows a comparison of the 22A1 and the V1 repeater arrangements in block form. Hybrid coils, equalizers, filters and regulating networks are associated with the line equipment instead of with the amplifiers, so that the repeater proper

TCI Library: www.telephonecollectors.info

consists only of the amplifiers themselves. All repeaters are thus essentially identical and this makes it possible to transfer them freely from one circuit to another, as may be required for maintenance purposes. It also makes possible the use of the same repeaters for either 2-wire or 4-wire operation.

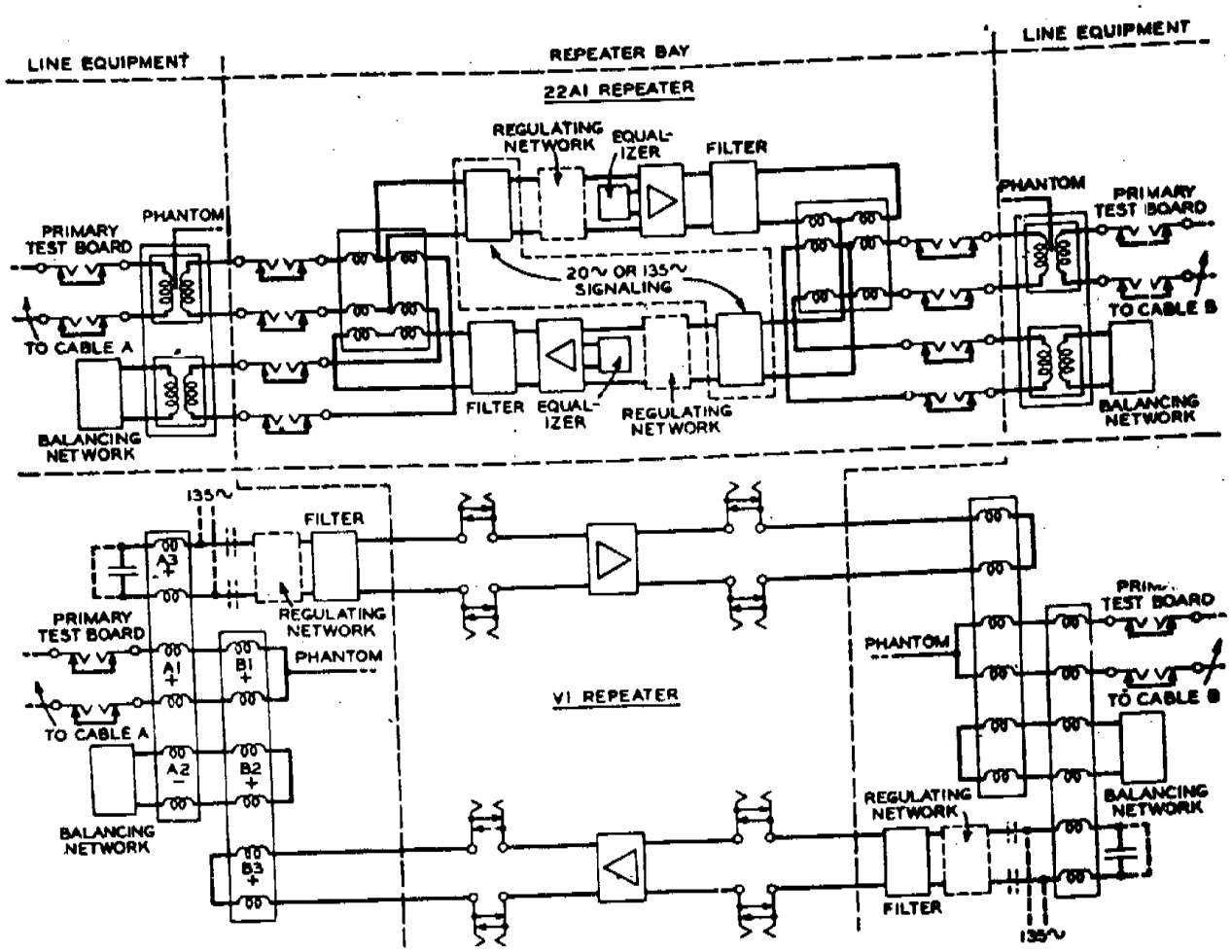

Figure 17-3 (above) - Block Schematic of an Intermediate 22A1 Repeater;
(below) - Block Schematic of a V1 Repeater.

TCI Library: www.telephonecollectors.info

The V-type repeater consists fundamentally of two one-way amplifiers, including talking and monitoring features. A schematic of one amplifier of a V-type repeater is shown in Figure 17-4.

A. V1 Repeater

It will be noted that the amplifying element is a pentode rather than a triode. This permits a maximum net gain of about 35 db, even though the feedback circuit causes a reduction of approximately 10 db.

The amplifier employs negative feedback which reduces gain fluctuations with changes in potentials applied to the vacuum tube. As a result, the variations in gain, due to battery fluctuations, are only one-third of those in the 22A1 repeater. The gain frequency characteristic of the amplifier varies less than 1 db over a range of about 250 to 4,000 Hertz. Feedback is derived from an extra winding on the output transformer and resistances in the cathode circuit. These latter parts include a potentiometer, which, together with taps on the secondary winding of the input transformer, serves to control the gain. The amount of effective feedback changes with the setting of the potentiometer.

The gain change resulting from a movement of the potentiometer contact arm is due to the combined effects of a change in feedback voltage and a change in the amplification of the vacuum tube due to the change in grid bias. This method permits a continuous control of gain over a range of about 5 db. For both direction of transmission, two amplifiers are required of the type shown in Figure 17-4, as this figure only provides amplification in one direction.

TCI Library: www.telephonecollectors.info

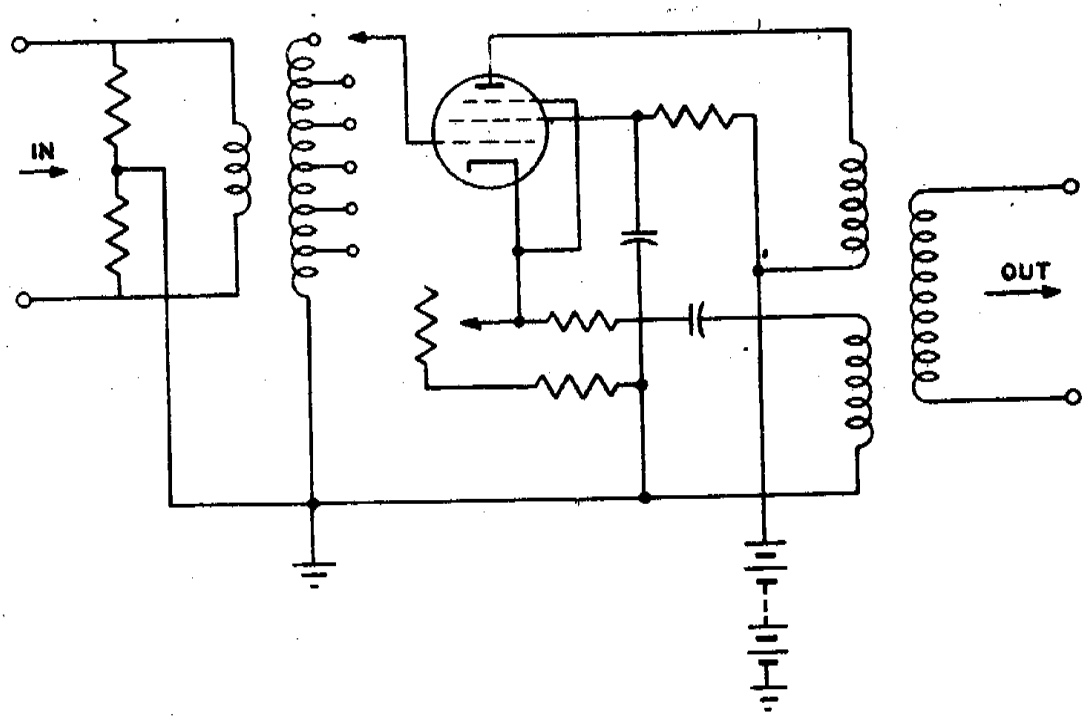

Figure 17-4 One Half Of V Type Repeater

B. V3 Repeater

The V3 repeater consists of two amplifiers and supersedes the V1 telephone repeater. The amplifiers composing the V3 are of the miniature type arranged on an 11-pin plug-in base. The overall size of the V3 repeater is 1/6 that of the V1. This has been accomplished principally by the use of a small combined input-output transformer in a single can, a small carbon composition potentiometer for gain adjustment, a small 1 uf capacitor, and a small vacuum tube.

The "miniature" technique is used primarily for space saving purposes, and the overall characteristics of the amplifier are approximately the same as for the V1 repeater. The vacuum tube used has about twice the transconductance and substantially the same output power as the tube employed in the earlier V-type amplifier. The entire amplifier unit is of the plug-in type which provides for quick replacement of defective units and facilitates testing and maintenance.

TCI Library: www.telephonecollectors.info

The gain may be varied continuously from a maximum of about 36 db to a small loss by a logarithmically tapered potentiometer having approximately 40 db range connected across the secondary of the input transformer. Feedback is obtained by coupling from the output to the input through a cathode resistance and a feedback winding on the output transformer. The total amount of feedback over the voice frequency band from the output to the input is about 14 db and is independent of gain adjustment. This is about 6 db more than the V1 and stabilizes the gain better against tube and battery variations.

C. V4 Repeater

The V4 telephone repeater consists of two 227 type transistorized voice frequency amplifiers and their associated equipment. The repeaters have been designed primarily for use between 600- or 900-ohm central office equipment and H88 loaded exchange cable, 600-ohm equipment, or nonloaded cable, by utilizing miniature repeating coils. The associated equipment consists of 1-type terminating sets, 359-type equalizers, and 849-type networks. These various equipments have been designed as plug-in units to facilitate field maintenance, line-up and monitor procedures, and unit replacement as the demand for a particular circuit arrangement changes. Balanced center tap input and output coils built into the amplifier units provide simplex signaling legs without the use of additional repeating coils. If no provision for simplex signaling is needed, these center taps can be used to match the 150- or 300-ohm impedance of nonloaded cable sections or to provide over the line power to intermediate repeater stations.

The V4 operates from either a 48- or 24-volt source. Power consumption is reduced because of solid-state design. For example, each amplifier uses no more than one watt. The V4 will perform substantially longer without maintenance than repeaters previously available. Since all the equipment for a single telephone circuit is contained in one shelf, repeaters may be placed economically and without complex wiring on a customer's premises. In many cases, the V4 offers an approximate 4 to 1 size reduction over V3. Contributing to this efficient use of central office space are the built-in line coils which save additional space on the relay rack and distributing frame.

TCI Library: www.telephonecollectors.info

D. 24V4 Repeater

The 24V4 repeater is used to terminate a four wire circuit at a Central Office as an exchange area trunk or to extend a four-wire circuit in a two wire line to a distant office or PBX. Figure 17-5 is a typical circuit configuration and equipment arrangement of this repeater. The repeater consists of a mounting shelf which holds a terminating set, two amplifiers or networks, an equalizer, and includes a jack field and power supply arrangements. This repeater, therefore, furnishes equalization, amplification and transition from two-wire to four-wire using V4 repeaters. These repeaters are also used in Traffic Service Position Systems using one repeater for every local position at the base unit.

17.6 AMPLIFIER UNITS

The 227-type amplifiers are of the miniature type employing transistors. A 227-type amplifier is available for use in telephone circuits served by underground cable where lightning protection is normally not required. Another 227-type amplifier has essentially the same transmission characteristics but has built-in protection against lightning surges. The input and output transformers of both types are designed primarily to provide either 600- or 1,200-ohm line impedances with a highly balanced center-tap connection for simplex signaling. These amplifiers may be connected directly to the line without the use of repeating coils. By using a center tap for connection to one side of the line, additional input and output impedances of 150 and 300 ohms can be obtained for special applications. The simplex must be sacrificed in order to do this.

Figure 17-6 is a schematic of a 227-type amplifier, which employs two transistors, an input and output transformer capable of working directly into the line, gain controls, and feedback. For descriptive purposes, the circuit can be divided into three parts:

(a) Input Circuit
(b) Output Circuit
(c) Feedback Loop

The input circuit comprises a terminated transformer, a continuous gain control potentiometer of approximately 15 db range, and an 11 db pad that can be inserted, when required, to reduce the gain. The line winding of the input transformer is center-tapped for

TCI Library: www.telephonecollectors.info

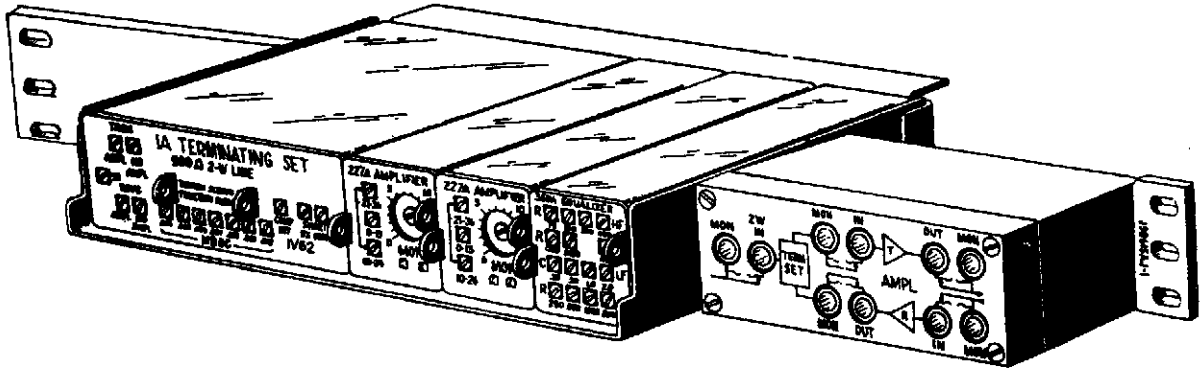

(A) 24V4 Equipment Arrangement

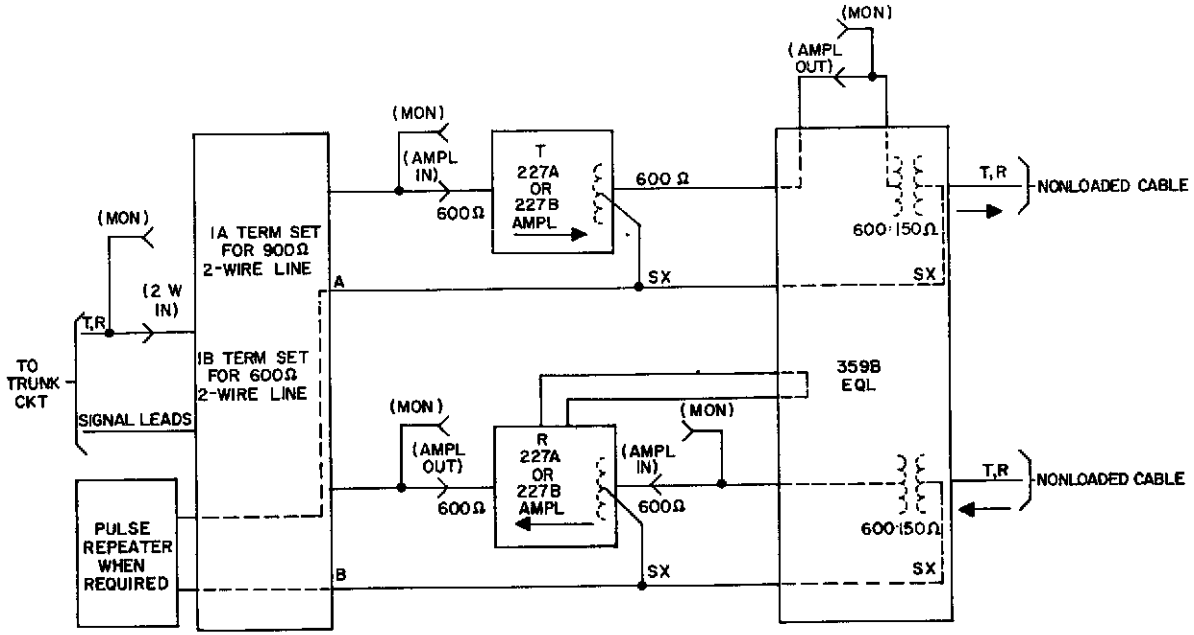

(B) 24V4 Repeater Arranged for Non-Loaded Cable Requiring Gain and Loop Signaling

Figure 17-5

TCI Library: www.telephonecollectors.info

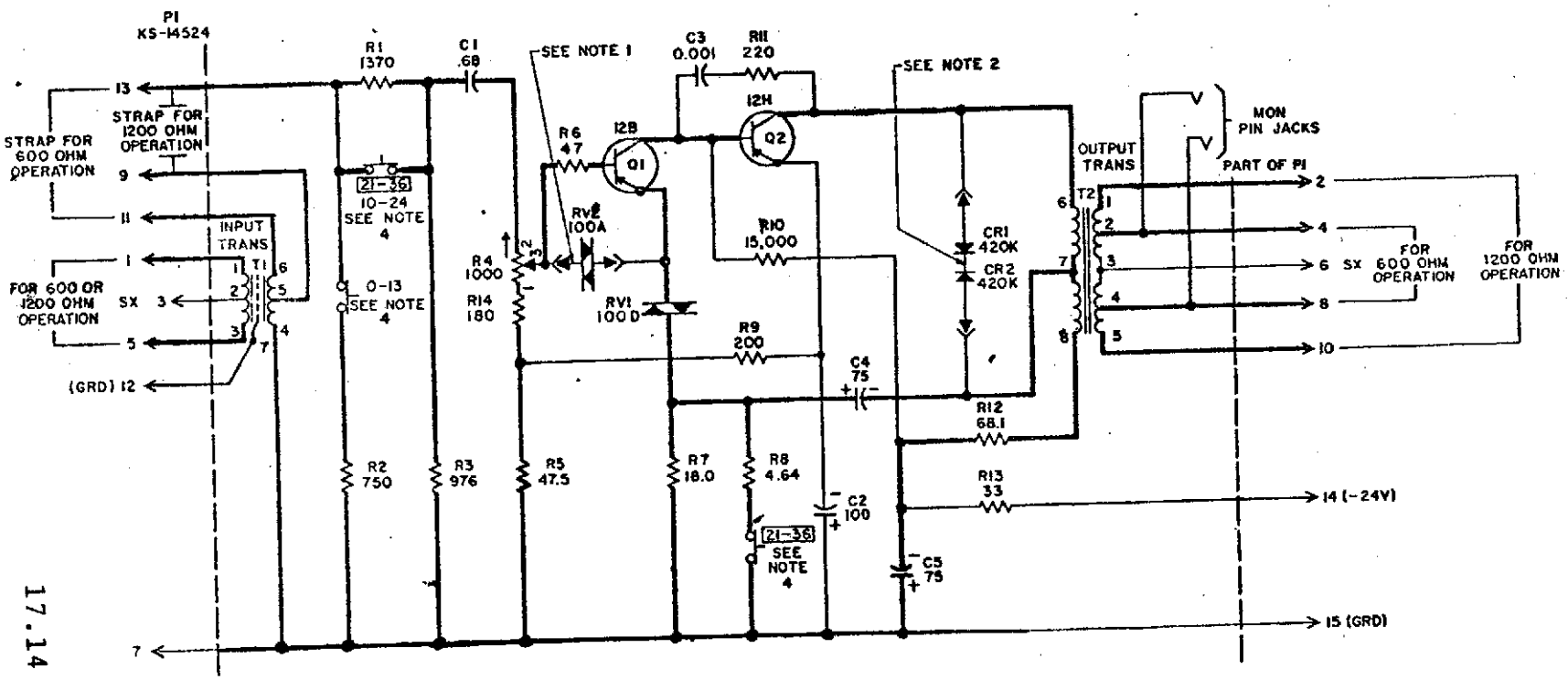

NOTES:

1. OMIT VARISTOR, RV2, FOR 227A.
2. OMIT DIODES, CR1 AND CR2, FOR 227A.
3. UNLESS OTHERWISE SPECIFIED ALL RESISTANCE VALUES ARE IN OHMS AND ALL CAPACITANCE VALUES ARE IN MICROFARADS.
4.

RANGE DB	SCREW POSITIONS		
	21-36	0-13	21-36, 10-24
21 → 36	CLOSED	OPEN	CLOSED
10 → 24	OPEN	OPEN	CLOSED
0 → 13	OPEN	CLOSED	OPEN

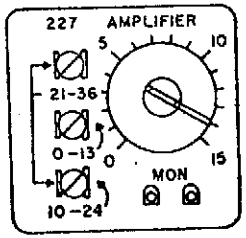

227 AMPLIFIER FACE PLATE

Figure 17-6 Schematic 227-Type Amplifiers

TCI Library: www.telephonecollectors.info

balanced-to-ground operation, and an electrostatic shield is provided. The secondary winding is tapped to provide either 600- or 1,200-ohm termination for the line. The secondary side of the input coil is brought out to terminals, so that a network can be inserted to equalize for loaded cable.

The output circuit comprises a multiple winding transformer used in an unbalanced hybrid connection for feedback, a line-balancing network, and a feedback network. The line winding is center-tapped for balanced operation and taps are provided for connection to either 600- or 1,200-ohm lines. The primary winding is tapped for 10:1 impedance division to minimize power loss to the line. The output impedance is generated by feedback action, thus avoiding power loss in a terminating resistance.

The feedback system comprises two essential loops, one being effective for voice-frequency currents, and the other being effective for bias currents, which are essentially direct currents serving to stabilize the operating point for the transistor. In one loop, voice-frequency current from the hybrid transformer is fed back through a resistor in series with the input circuit. By shunting this resistor with one of lower value, the feedback may be changed to increase the gain by approximately 11 db. The collector current for the output transistor is stabilized by a common emitter resistance. A fraction of the current is diverted to the base circuit of the first transistor to stabilize the collector voltage of the input transistor.

The amplifier may be operated from a 24-volt battery or from a 48-volt battery with a series dropping resistor of 1,400 ohms. The gain of the amplifier is 0 to 36 ± 1 db in three overlapping ranges of about 15 db each. Range is selected by making screw-down contacts at the front of the amplifier. Gain within any range is smoothly adjustable by potentiometer. Gain is down about 0.5 db at 300 and 12,000 Hertz.

17.7 ASSOCIATED PLUG-IN APPARATUS UNITS

The one-type terminating set used with the 24V4 repeater provides the transition between four-wire lines and two-wire lines or drops. Each set is made up of a two coil hybrid transformer, series blocking capacitors, compromise network, building-out capacitors and two optional impedance improving networks for each direction of transmission.

TCI Library: www.telephonecollectors.info

The 359-type equalizers serve to compensate for the transmission-frequency characteristics of the line facilities with which they are used.

Where gain is not needed in the repeaters, the 849-type network is used in lieu of the amplifiers. In special cases, both amplifiers are replaced by these networks. Electrically, each network is the equivalent of a 1C pad, plus a transformer when needed, for matching the pad to line facilities. The pad part is adjusted by means of 89-type plug-in resistors.

17.8 44V4 REPEATER

The 44V4 repeater is a four-wire voice frequency repeater usually inserted at an intermediate point in a long trunk to provide gain and equalization for low loss circuits on loaded or nonloaded lines. It consists of two amplifiers, two equalizers and a jack field. Figure 17-7 shows a typical circuit configuration of this repeater.

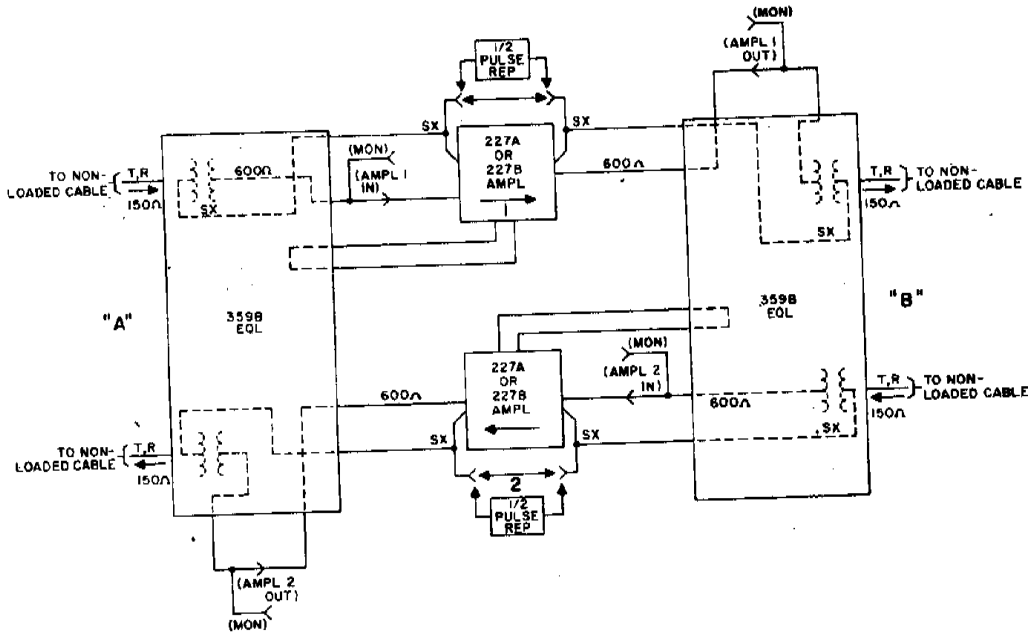

Figure 17-7 44V Repeater Plug-In Units Arranged For Non-Loaded Cable Requiring Gain, Equalization, and Simplex Signaling

TCI Library: www.telephonecollectors.info

17.9 E-TYPE REPEATERS

A. E1 Repeater

An interesting and rather remarkable design of voice-frequency repeater circuit is illustrated in Figure 17-8. This device is sometimes known as a negative-impedance repeater or converter, but is coded in the Bell System as an E-type telephone repeater. Instead of being inserted in the line as in the case of other types of telephone repeaters, the amplifier is coupled to the line through a transformer without breaking the line continuity This transformer may be viewed as both an input and output transformer. As indicated in the drawing, the amplifier circuit employs a dual-triode connected in a push-pull arrangement. The grounded grid connection of the tubes results in a very large feedback because the input and output are in a common circuit. The secondary windings of the transformer are included in the output (plate to cathode) circuit as well as in the input circuit, and plate to cathode current thus flows through both the output and input circuits. Plate to cathode current changes accordingly tend to set up induced voltages in the primary side of the transformer.

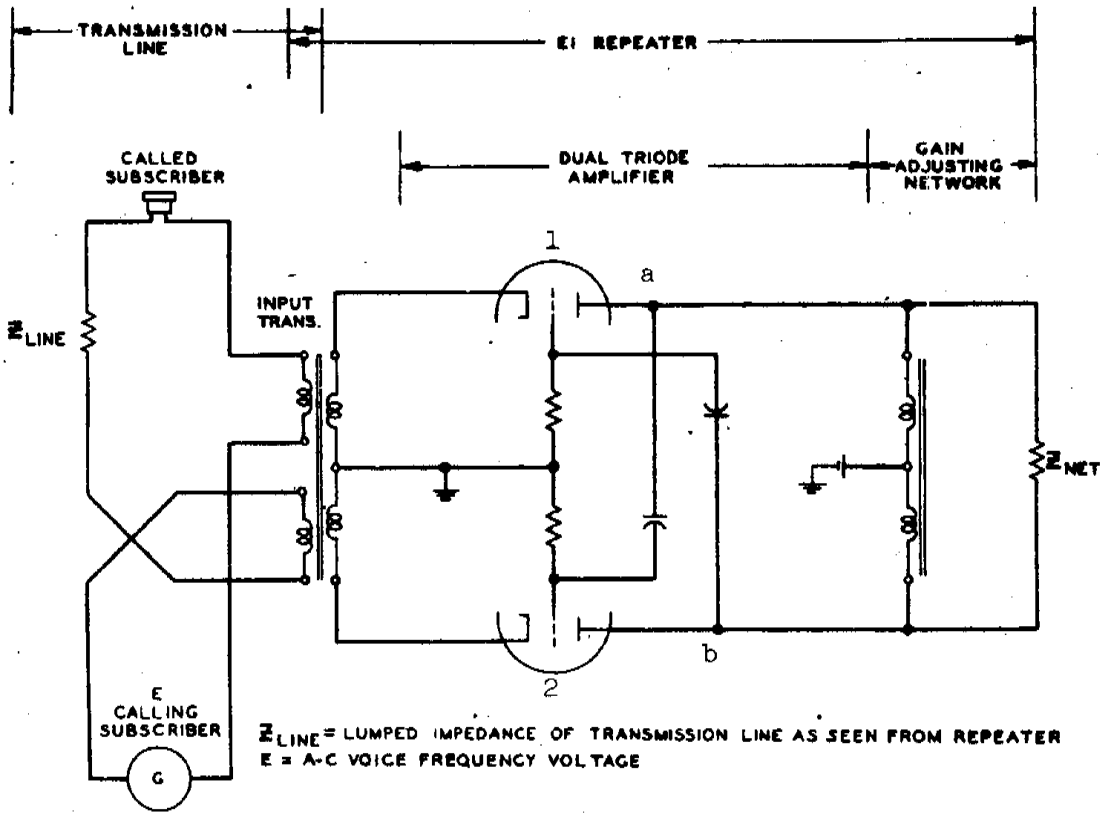

Figure 17-8 Simplfied Schematic of E1 Repeater

TCI Library: www.telephonecollectors.info

At first glance it might appear that this circuit arrangement would have practically no effect on the transmission line because current flowing in the line would induce voltages in the transformer secondary, which would be applied across the cathode-grid circuit of the tubes to cause corresponding currents in the plate-cathode circuits that would flow through the transformer secondaries and set up voltages that would counteract the original applied voltages. This would be true if it were not for the capacitors which couple the plate of each tube to the grid of the other tube. The potential at the grid of Tube 2 is thus determined not alone by the input voltage, but also by the potential at point a. This potential depends on the amount of current flowing in the circuit of Tube 1 and the resultant voltage drops across the retardation coil and the elements of the gain adjusting network. Similarly, the grid potential of Tube 1 is controlled by the potential at point b.

A careful analysis of the voltages throughout the circuit when an a-c input signal is applied, will show that amplified voltages are set up in the secondary windings, and that these voltages are of such phase as to induce voltages in the primary windings that add to the line signal voltages so as to increase the current in the line in either direction. The net amount of amplification secured is controlled by the gain adjusting network by virtue of its control over the potentials at points a and b. In practice, the gain adjusting networks are designed so that the connections of their elements can be adjusted in various specified ways depending upon the characteristics of the line facilities in which the repeater is used. The network connections thus determine not only the overall gain of the repeater, but provide equalization to match the loss-frequency characteristics of the line.

Transmission-wise, it is convenient to consider the E repeater as an impedance converter, which makes the positive impedance of the gain adjusting network appear as a negative impedance coupled in series with the line by the transformer. For this reason, it is frequently called a "negative impedance repeater." When current passes through a positive impedance, a voltage difference IZ, is developed across the impedance. The voltage will be directly proportional to the current, as long as the impedance is not changed. A negative impedance also produces a voltage across its terminals which is proportional to the current which it carries.

TCI Library: www.telephonecollectors.info

However, this voltage will have a polarity that aids the flow of current. So a negative impedance will tend to cancel the "opposition" to current flow offered by a positive impedance in series with it. It is in this way that the E repeater overcomes a portion of the attenuation of the transmission line to which it is connected.

Repeaters of this type provide gains up to 8 or 10 db over the voice-frequency range of approximately 300 to 3,500 Hertz. The application of E repeaters is generally to Exchange telephone plant, where they may be used effectively to improve transmission on long trunks or subscriber lines. They can be applied either at terminals or intermediate points of such lines or trunks.

B. E23 Repeater

Since the equivalent circuit of any transmission line is a T-network, a connected device that is not to be a source of reflections must have an equivalent circuit with both a series and a shunt component. The E repeater is in effect only a negative impedance in series with the line, and it is inherently a source of echo.

This unfortunate characteristic has generally restricted the E1's use to interlocal trunks where the echo problem is usually less critical. This limitation brought about the introduction of two new negative impedance repeaters, the E2 and E3. The E2 is electrically the same as its predecessor, the E1, differing only in equipment arrangements. However, center taps are provided on the line windings of the E2 transformer to permit connection of a shunt element. The circuit of the E3 is materially different from that of the E2, but it performs the same function. It makes the positive impedance of its network appear as a negative impedance between the line terminals of the repeater. However, this negative impedance is designed to be bridged across the line. Normally this connection is made between the center taps on the line windings of an E2. Such a combination is termed an E23 repeater and can be seen in Figure 17-9. The E23 can be viewed as an artificial transmission line having an impedance which matches that of the real circuits with which it is associated, but having a negative attenuation constant so that it which replaces some of the energy lost in the real line.

TCI Library: www.telephonecollectors.info

Since the E23 can provide appreciable gain without introducing objectionable echo, it is finding increasing application in toll connecting trunks as well as inter-local trunks and special service lines.

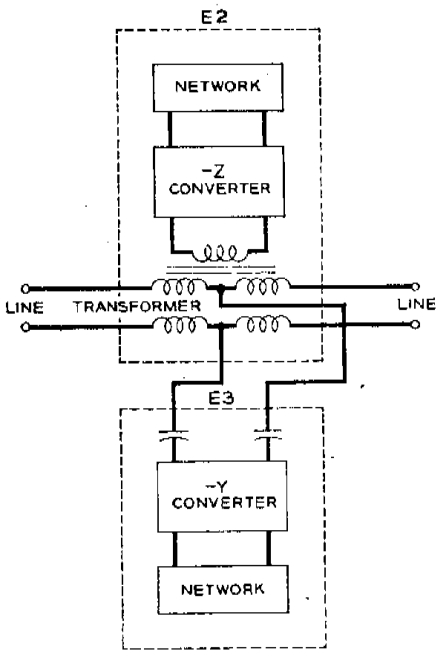

Figure 17-9 Block Diagram E23 Repeater

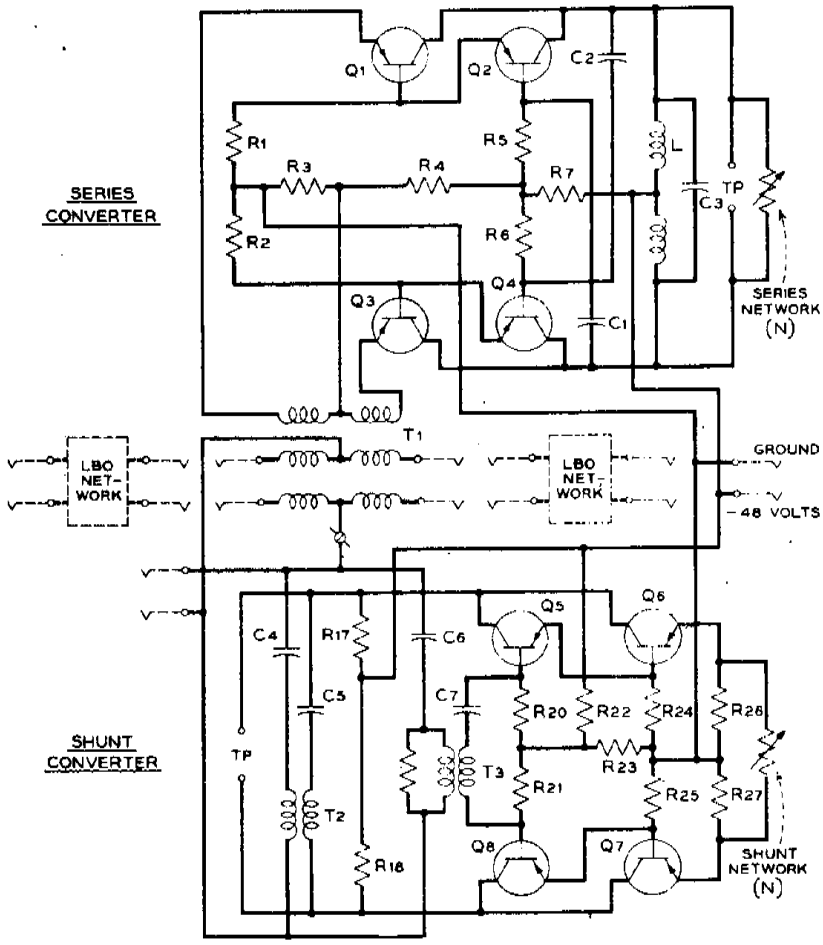

Figure 17-10 Complete Schematic of E6 Repeater

TCI Library: www.telephonecollectors.info

C. E6 Repeater

The E6 is a transistorized two-wire, voice-frequency repeater of the plug-in type. The repeater consists of an 831A network and two line-building-out (LBO) networks. Figure 17-10 shows the schematic of an E6 repeater.

The 831A network is composed of a series converter and a shunt converter which change component resistive networks to negative impedances. These negative impedances form the arms of a gain pad designed to work with the LBOs which match the repeater to the line. The LBO contains elements to build out the line with regard to length, gauge, loading, capacitance, and whether the repeater is to be used at a terminal or intermediate location. Adjustments of the LBO and of repeater gain are made by screwdriver-operated screws which short out or connect in the various components as required.

Repeater gains up to approximately 12 db are possible in favorable cases. In a specific circuit, (12V, 6db) more gain can be realized from a repeater at or near the midpoint than from one at a terminal.

On certain types of circuits, more repeater gain is required than is normally obtainable without resultant singing during idle- or switching-circuit conditions. The greater gains are operable only with idle-circuit terminations or with repeater disablers of the loop-current-operated type. In many cases, the idle-circuit terminations cannot be used without adverse effect on signaling features, and in these cases, repeater disablers are required. The disablers must be located in the same bay with the associated repeaters in order to minimize the effect of capacitance of office cabling upon frequency characteristic of equipped facilities and to prevent interchannel crosstalk.

The E6 repeaters may be operated in tandem on the same circuit, provided the rules for maximum permissible gain are observed.

Combination of the series and shunt units, reduction in size of the line transformer, transistorization, and simplification of repeater networks result in space saving of about 50% over the E23 repeater, as seen in Figure 17-11. Combination of the two units also saves

TCI Library: www.telephonecollectors.info

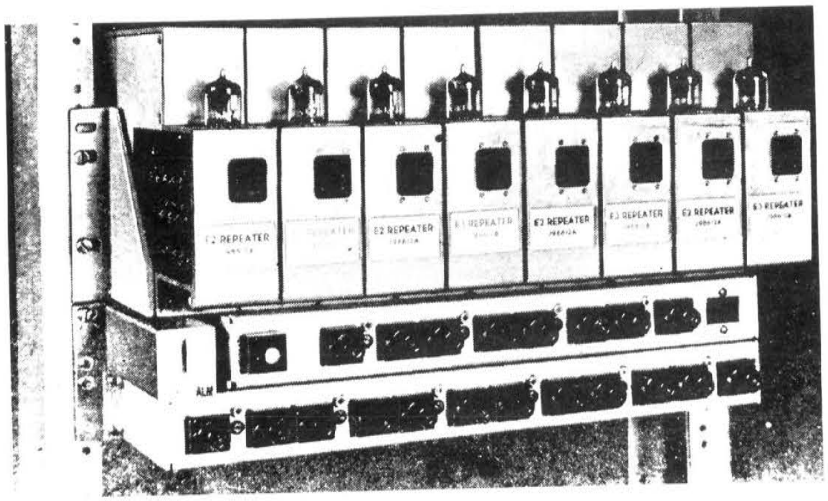

Four E23 Repeater With Mounting Shelf

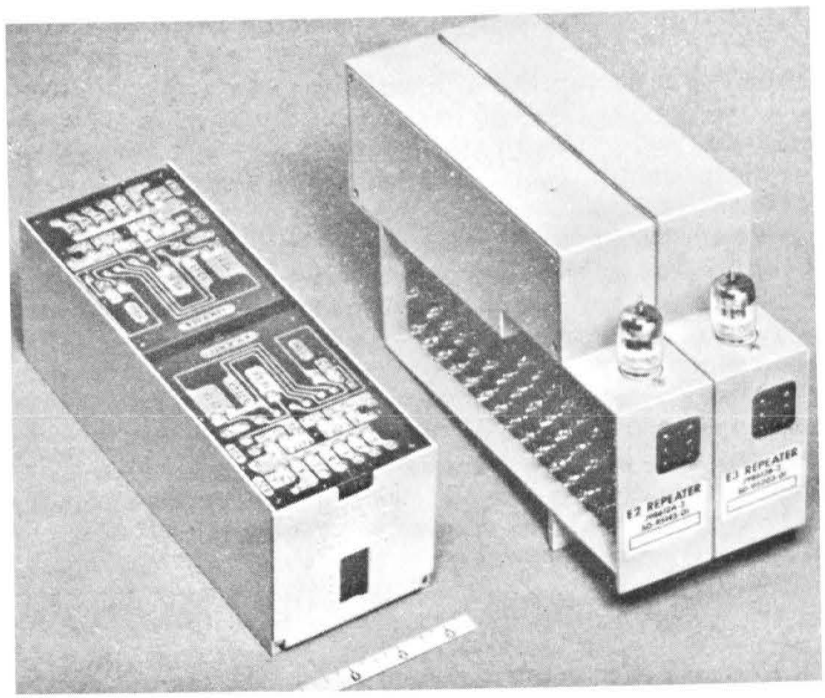

Figure 17-11 E23 and E6 Repeater

TCI Library: www.telephonecollectors.info

handling the time during installation and maintenance, and reduces the number of plug-in contacts.

The use of transistors in place of vacuum tubes frees the E6 repeater from the need for 130 volt battery. This permits easy application in outlying offices that have only 48-volt supply. It also reduces power consumption and the problem of heat dissipation. In the vacuum-tube repeater, filament-current adjustments were required; the use of transistors does away with filament currents.

D. E7 Repeater

The E7 repeater is a transistorized, two-wire, voice-frequency telephone repeater of the plug-in type. It is designed to be inserted between the central office and the subscribers nonloaded loop and used for TWX and Dataphone services, in the manner indicated in Figure 17-12. The repeater improves the loop return loss by modifying the impedance seen from the central office end, provides moderate gains at higher voice - frequencies to permit meeting return-loss and insertion-loss requirements, respectively, and inserts moderate losses at frequencies below 850 Hz as part of its equalization function.

The E7 repeater, although it uses the same mounting shelf arrangements and housing as the E6, has no counterpart among the other E type negative-impedance repeaters. The E7 repeater consists of three major parts:

(1) The Coupling Transformer
(2) The Negative-impedance Converter (NIC)
(3) The Adjustable Network

This repeater acts basically as a shunt repeater at high voice frequencies and a series repeater at low frequencies. As the E7 repeaters must improve the impedance matches between nonloaded loops, which can vary over a considerable range, and nominal office impedance of 900 ohms and 2 microfarads in series, they are necessarily unsymmetrical devices. To couple the office to the loop, a transformer with taps on the loop windings is employed. The converter is coupled to both the office and the loop by means of a fixed third winding.

TCI Library: www.telephonecollectors.info

The E7 repeater improves the transmission by decreasing the loop loss at the high-frequency end of the voice band and increasing it at the low-frequency end. The amount of the high-frequency gain introduced by the repeater is primarily determined by the coupling-transformer turns ratio and may be as high as 8 db. As the E7 is not designed to present a smooth-termination at the central office end of the loop it may reduce the return loss at the station end of the loop. Therefore, this repeater is restricted to terminal subscriber loops that do not switch the station end circuit.

The E7 repeater's negative-impedance converter is a shunt-type (short-circuit stable) negative-impedance converter which presents to the coupling transformer approximately the negative of the impedance of its adjustable network. The shunt converter employs compount-connected transistors in a balanced amplifier and keeps the gain essentially constant, regardless of normal variations of the transistors and of the power-supply voltage.

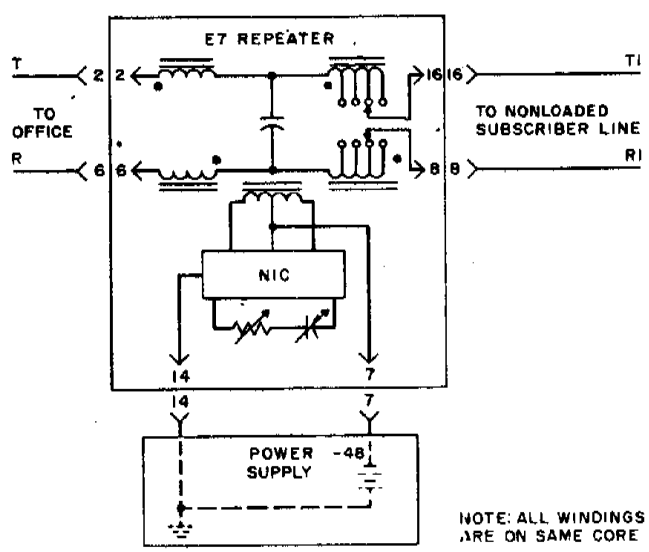

Figure 17-12 Simplified Schematic of E7 Repeater

TCI Library: www.telephonecollectors.info

CHAPTER 18

TELEPHONE POWER PLANTS

18.1 INTRODUCTION

The term power plant, or power equipment, when applied to telephone work, refers to that part of the central office which is devoted to furnishing current required to operate the telephone apparatus. The purpose of the telephone power plant is to furnish energy of the required character in the proper amount and be available 100 percent of the time. An elaborate telephone system is rendered useless if the supply of power fails. Such a failure could cause the "memory" circuits used in today's larger telephone exchanges to lose their stored information to say nothing of cutting off thousands of established telephone conversations and preventing new calls from being made. In addition, a power failure could interrupt the orderly flow of data transmission, halt TV programs and other connected services. In an emergency such a failure could be disastrous. In a way, the power plant might be termed the heart of the telephone system since every line and connection depends on the supply of power.

To meet the vital need of every-ready power, it is necessary to furnish a primary source of power which is reliable. This is usually available through the commercial power services of the local electric and power company. Wherever possible, two services connected to different generating stations or systems are brought into the telephone building. Storage batteries of sufficient capacity to carry the load of the office during failure of the sources of power supply are also used. Common practice and experience have resulted in batteries being provided to carry the load for certain specified intervals.

Carrier power plant ac requirements are such that a continuous supply of power is necessary for the proper functioning of repeater units. This is accomplished by motor alternator sets which are ac driven from commercial power under normal conditions and battery driven during the period of commercial power failure.

To provide reserve power to clocks and other ac operated apparatus during momentary interruptions of commercial power or where the commercial voltage drops below approximately 85% of normal, ac generating units driven from the central office battery are automatically switched-in.

TCI Library: www.telephonecollectors.info

Reserve power supplied by an engine driven alternator on the premises is usually provided under present day practices to supply the essential ac power requirements of the telephone office until the commercial power service is restored.

The central office equipment requires direct current (dc), usually at 24 and 48 volts, for voice transmission and also for operating switching mechanism, relays and other apparatus. In addition many other forms of current are required such as 20-cycle, or 1000-cycle alternating current (ac) for ringing and signaling subscribers or operators in other central offices. 130 volt (dc) supply, both positive and negative is required for telegraph and teletypewriter operation and for plate battery on electron tubes. Since central office equipment and apparatus is engineered to function within specified voltage limits, all battery voltages are closely regulated.

Since continuous power must be provided by the telephone power plant, storage batteries are usually provided. Motor generator units and rectifier units are used to keep them charged so that they can take over the load temporarily when the commercial power supply fails. There are several arrangements of generators and batteries that have been used in the past to develop central office power. The practice at present is to supply the load current continuously from several charging units operated in parallel with each other and with a single storage battery line-up. In this arrangement, the storage battery is "floated," or connected continuously across the main bus bars. Being always connected to the load, the storage batteries, in addition to being immediately available in case of a power failure, have an important filtering effect in reducing noise caused by the charging units. Noiseless direct current (free from ripples or fluctuations) must be furnished for the talking circuits as the telephone receiver is sensitive to noises as well as voice currents. Noise filters, therefore, are provided in the battery feeders for this purpose.

The nominal voltage of each charging unit used is maintained at a value sufficiently high to take care of the load requirements of the office and to supply a small "trickle" charge to the battery, thus keeping it fully charged. The present practice is to provide automatic voltage regulation to insure that the load on the plant is

TCI Library: www.telephonecollectors.info

absorbed by the output of the charging units and to insure that the required number of charging units to absorb the load may be cut-in or cut-out as required. In some power plants all charging rectifiers operate continuously to share the load between them.

A. PRINCIPAL UNITS

Telephone power plants vary in magnitude and detail depending upon the size and kind of central office they are used with. Broadly, the principal units of power plants for medium and large sized central offices are:

(a) Commercial power supply fusing and protective equipment for safeguarding the supply as it enters the power plant.

(b) The charging equipment consisting of the motor generator charging machines or rectifiers and their associated equipment, used to convert the commercial power supply to direct current at voltages suitable for central office operation.

(c) The power board containing the control and distribution equipment which includes switches, meters, safety devices and other equipment, necessary for the operation of the plant.

(d) The storage batteries for providing a source of emergency power in case of failure of the power source, and to aid in maintaining a uniform voltage for the current supply.

(e) The ringing and signaling equipment including the ringing machines and ringing power boards for supply and control of the ringing current, tone supply, interrupted current, coin control current and other forms of current supplied for signaling purposes.

(f) The reserve power supply consisting of an engine-alternator set with its associated controls and equipment is used to furnish ac power when the commercial power service fails.

TCI Library: www.telephonecollectors.info

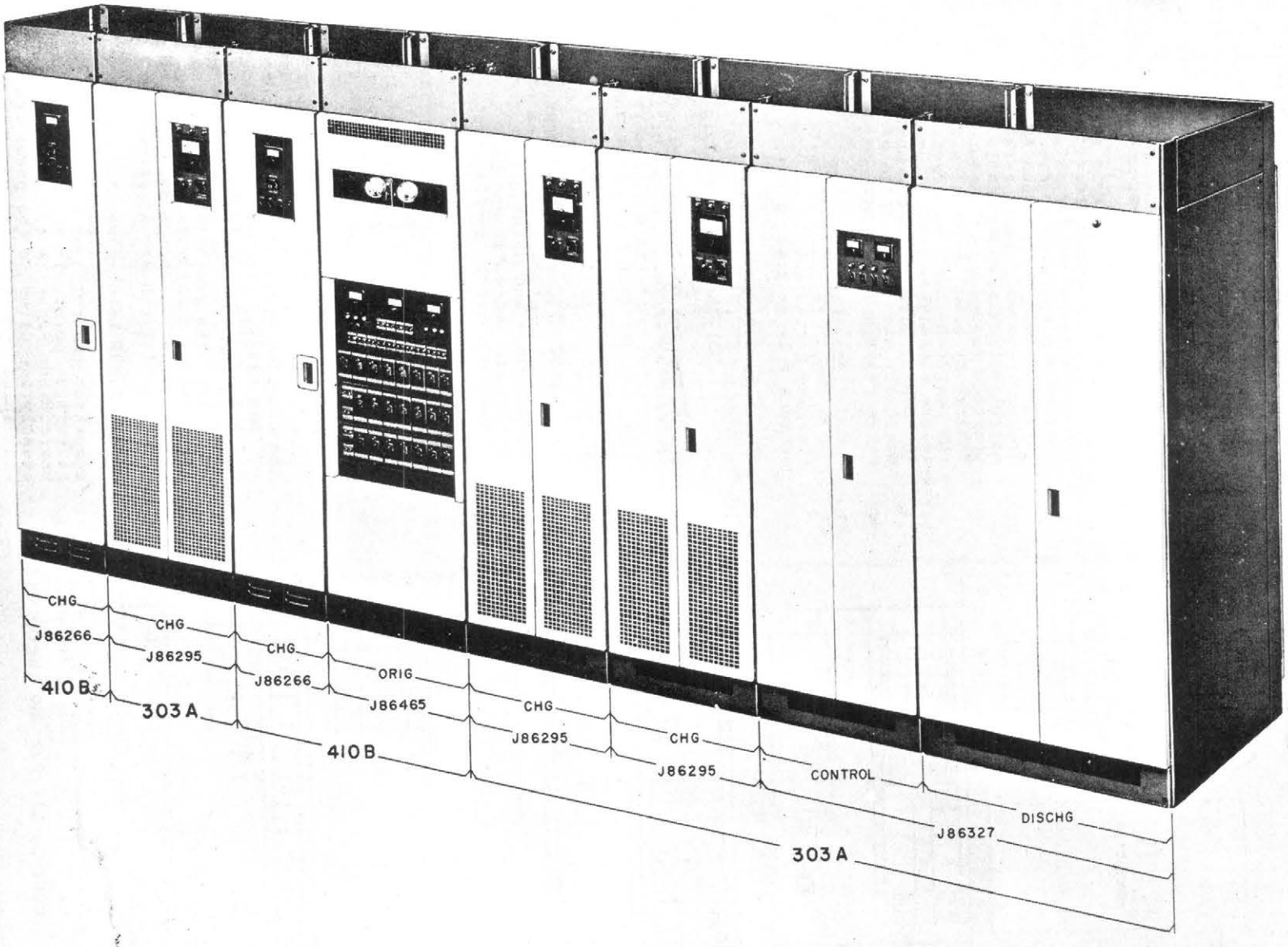

Figure 18-1 Combined 303A And 410B Power Plants

TCI Library: www.telephonecollectors.info

B. POWER PLANT SCHEMATIC

Figure 18.2 is a schematic of an automatic power plant showing both a motor generator and a rectifier as a source of supply and having load requirements of 100 to 4000 amperes. The battery in this plant is continuously floated and the charging unit voltage, therefore, maintained at a constant value. As indicated in Figure 18.2 this is accomplished automatically by means of a motor driven field rheostat associated with a shunt wound generator and by an electronic regulating and control circuit associated with the rectifier.

A voltage relay designated GEN, REG. Voltage Relay in the drawing, is bridged across the main battery. As long as the battery voltage remains as its proper value, this relay is not operated. If the battery voltage becomes too high or too low, one or the other of the two relay contacts is closed. This causes either relay L or relay R to operate and the operation of either of these relays causes the motor driven field rheostat to move in the direction which will restore the generator voltage to its normal value; or in the case of a rectifier, cause the electronic control circuit to raise or lower the rectifier as required.

To avoid overloading the charging unit, an ammeter relay is inserted in series with the line. When the unit is fully loaded, a contact on this relay closes causing the A relay to operate and open the regulating voltage relay circuit. This prevents any further attempt by the relay to increase the charging unit output.

The circuit shown includes two emergency cells which are connected to switches in such a way that one or both may be connected in series with the main battery. These cells are provided to take care of emergency conditions where the outside power supply fails and the charging units are not operating. In such cases the load must be carried by the batteries alone and if the failure continues for an appreciable time, the battery voltage will decrease below the specified minimum value. The emergency cells are then automatically cut into the circuit by a voltage relay bridged across the line as shown.

TCI Library: www.telephonecollectors.info

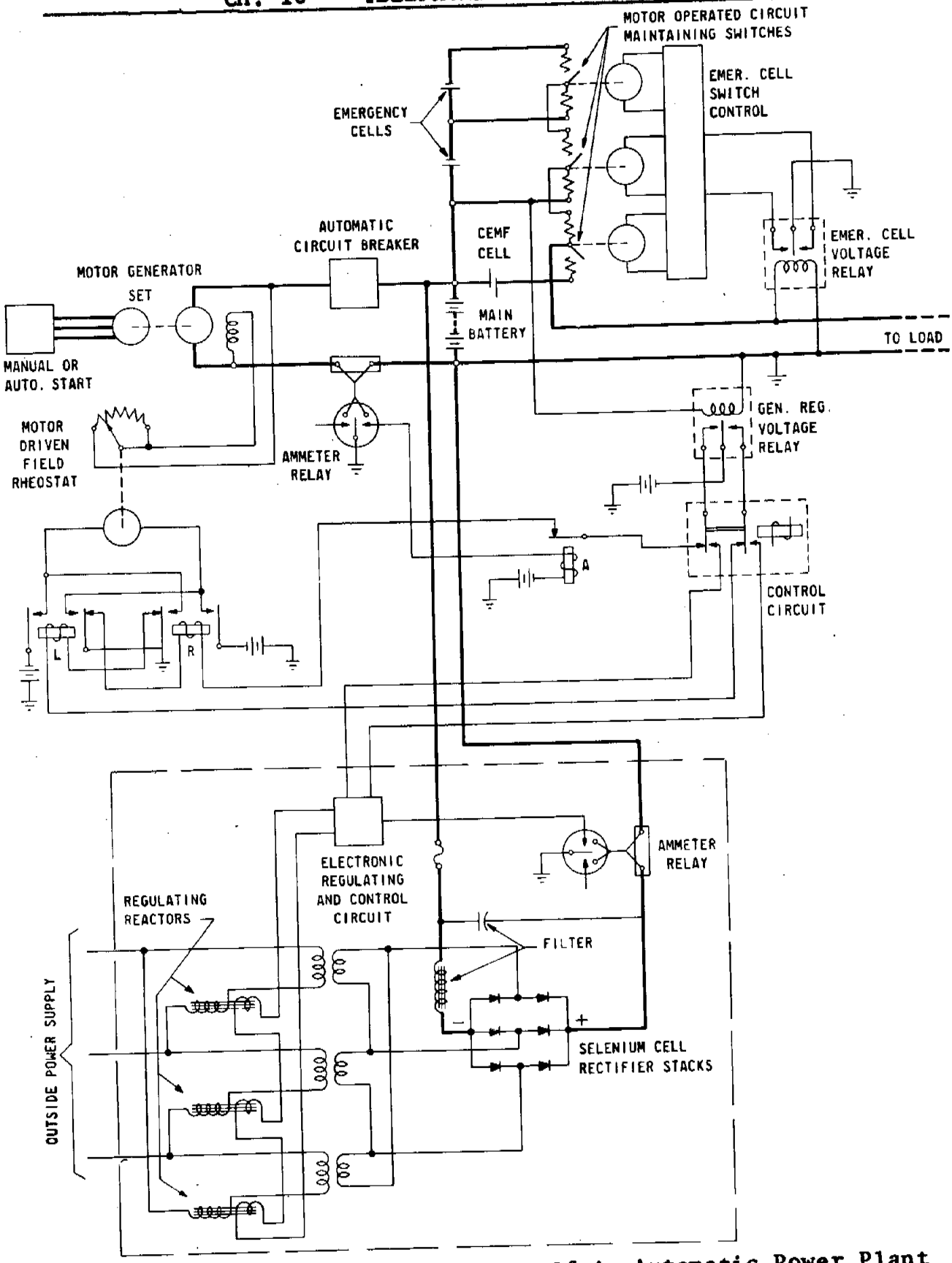

Figure 18-2 Simplified Schematic Of An Automatic Power Plant

TCI Library: www.telephonecollectors.info

Switches are provided for charging the emergency cells from the charging units in series with the main battery. However, since the emergency cells are not always in use they are continuously supplied with a small trickle charge furnished by a rectifier which maintains them in a fully charged condition. These switches and the emergency cell charging rectifier are not shown in the circuit of Figure 18-2.

The main battery is, or course, kept in a charged condition as long as the plant is operating normally. When failure of the outside supply requires the battery to carry the load for an appreciable time, however, the battery will become more or less discharged and will therefore require special charging. To provide charging current in such a case, it is necessary to increase the output voltage of the charging unit above its normal value. However, since the charging unit is connected directly to the load, an increase in its output voltage would also increase the load voltage.

To avoid increasing the load voltage, the circuit also includes a counter-emf (C.E.M.F.) cell which is automatically inserted in series with the load circuit when the output voltage of the charging unit is increased above its specified value. The C.E.M.F. cells, when current flows through it, sets up a voltage opposing the voltage which is driving the current. The countercell voltage is approximately 2 volts per cell and is substantially constant under wide variations of current. Physically, the C.E.M.F. cell consists of two plates of pure nickel immersed in a caustic soda solution. The size of the plates is determined by the amount of current which the cell is required to handle. The cells are usually mounted along with the storage battery cells.

Figure 18-2 shows one generator and one rectifier. However, additional units may be included to carry the maximum office load. With a light load the motor generator set is running and the battery voltage is held to close limits by the motor driven field rheostat under control of the voltage relay.

With a rising office load, when the first charging unit reaches full load, the ammeter relay makes its "high" contact and causes the voltage relay to be disconnected from control of the first unit thus preventing an overload and at the same time connecting it to the second unit. A

TCI Library: www.telephonecollectors.info

further increase in the office load again decreases the battery voltage causing the voltage relay to make its "low" contact. This causes relays in the control circuit to function and start up the second unit under control of the voltage relay. Any further increase in the load will be handled in the same way and as soon as the second unit reaches its rated full load, the next unit will be started and connected.

With a falling office load, the battery voltage increases and the output of the charging unit is decreased when the voltage relay makes its low contact. When the output is decreased to no load the unit is shut down and control including the voltage relay is transferred to the next lower numbered charging unit. This process continues until the output of the charging unit or units is sufficient to float the load.

C. ALARM SIGNALS

Visual and audible signals are provided to indicate abnormal conditions such as high or low charging or floating voltages. Alarms are also provided to indicate not only trouble conditions, such as blown fuses and equipment failures, but also to serve as a warning to the attendant when a charging unit is out of service.

18.2 POWER SERVICE SUPPLY AND DISTRIBUTION

The source of primary power for telephone power plants must be dependable. Commercial ac power obtainable from the local power companies is as reliable as can be expected. If the power company can furnish power from two generating plants independently or if there is available some other source of suitable power, the most dependable and adoptable source is selected as the regular supply and facilities for switching to the alternative source are provided. However, interruptions in the transmission of the power supply to telephone central offices do occur on occasions and because of this possibility provision must be made to furnish reserve power. By this means the telephone power plant may continue functioning in the normal manner irrespective of the duration of the commercial power failure.

TCI Library: www.telephonecollectors.info

Reserve power is supplied by Engine Alternator sets which are manually controlled in the larger offices. These units are usually large enough to provide all the ac power required to properly operate the power plant in the regular manner including radio and television channels, automatic message accounting equipment, emergency lights and certain elevator services.

In the smaller central offices, particularly those that are unattended, the engine alternator sets are automatically controlled and are cut-in as soon as the ac voltage drops below a certain value for a predetermined period of time. In some remote localities such as microwave towers, engine alternator sets furnish the power exclusively. In these instances, two sets are provided and each one automatically carries the load 1/2 of the time.

A. POWER SERVICE PANELS

A power service panel including the necessary switches, wattmeters and protective equipment are provided by the power company for terminating the power supply within the central office building. This main power supply panel is used to furnish all the power required for lighting and operating the various electrical equipments within the building, as well as for operating the central office power plant. Additional smaller Power Distributing Service Cabinets fed from the main service panel are located throughout the central office building as required.

B. PROTECTIVE DEVICES

All electrical circuits are protected against abnormal current flow, short circuits or grounds, which might damage the equipment or create a fire hazard, by means of fuses or other protective devices. Protection for power circuits includes fuses, saftofuses, fusetrons and circuit breakers.

Fuses of the cartridge type (N.E.C. or National Electrical Code Standard) are most commonly used for power circuits.

Saftofuse is the trade name of a safety fuse unit (called dead front) consisting of fuse clips (for holding a cartridge fuse) attached to an insulating holder which may be connected to the current carrying parts of the circuit by inserting the holder into an insulating body which carries the bus-bar and lead connections.

TCI Library: www.telephonecollectors.info

Saftofuse Cabinets are sheet metal housings for enclosing the saftofuse units. The larger saftofuse cabinets are provided with covered wiring gutters which are opened only during installation or maintenance work. In a central office power plant the power service leads are run from the power service panel to the saftofuse cabinet (also called "power distributing service cabinet") where the circuits which lead to the charging machines, rectifiers and other electrical equipment requiring primary power voltages are protected.

Fusetrons (and Fustats) are the trade names of a protective device which is a combination of a fuse and a thermal element. They are commonly used for the protection of small motors. The motor starting current, for a short period while the motor is accelerating to normal speed, may be several times the full load ampere rating. A standard fuse large enough to carry the starting current would not, therefore, adequately protect the motor against a continuous overload which in time would heat it up sufficiently to damage it. The fusible link of the fusetron provides the same protection against momentary abnormal currents as an ordinary fuse, while the thermal element heats up and opens the circuit on a continuous current flow only slightly greater than its rated capacity. A fusetron of approximately the same ampere rating as the nameplate rating of the motor is usually used. A fusetron will open in about 1 or 3 minutes at 50 percent above its rating and in a somewhat longer period at 25 percent above its rating. It would carry 6 or 7 times its rated capacity for only one to two seconds.

C. POWER SERVICE DISTRIBUTION

The block schematic shown in Figure 18-3 illustrates a typical method of distributing power service to power equipment on various floors of a telephone building. The notes in Table 18-1 explain the symbols that are used in Figure 18-3.

TCI Library: www.telephonecollectors.info

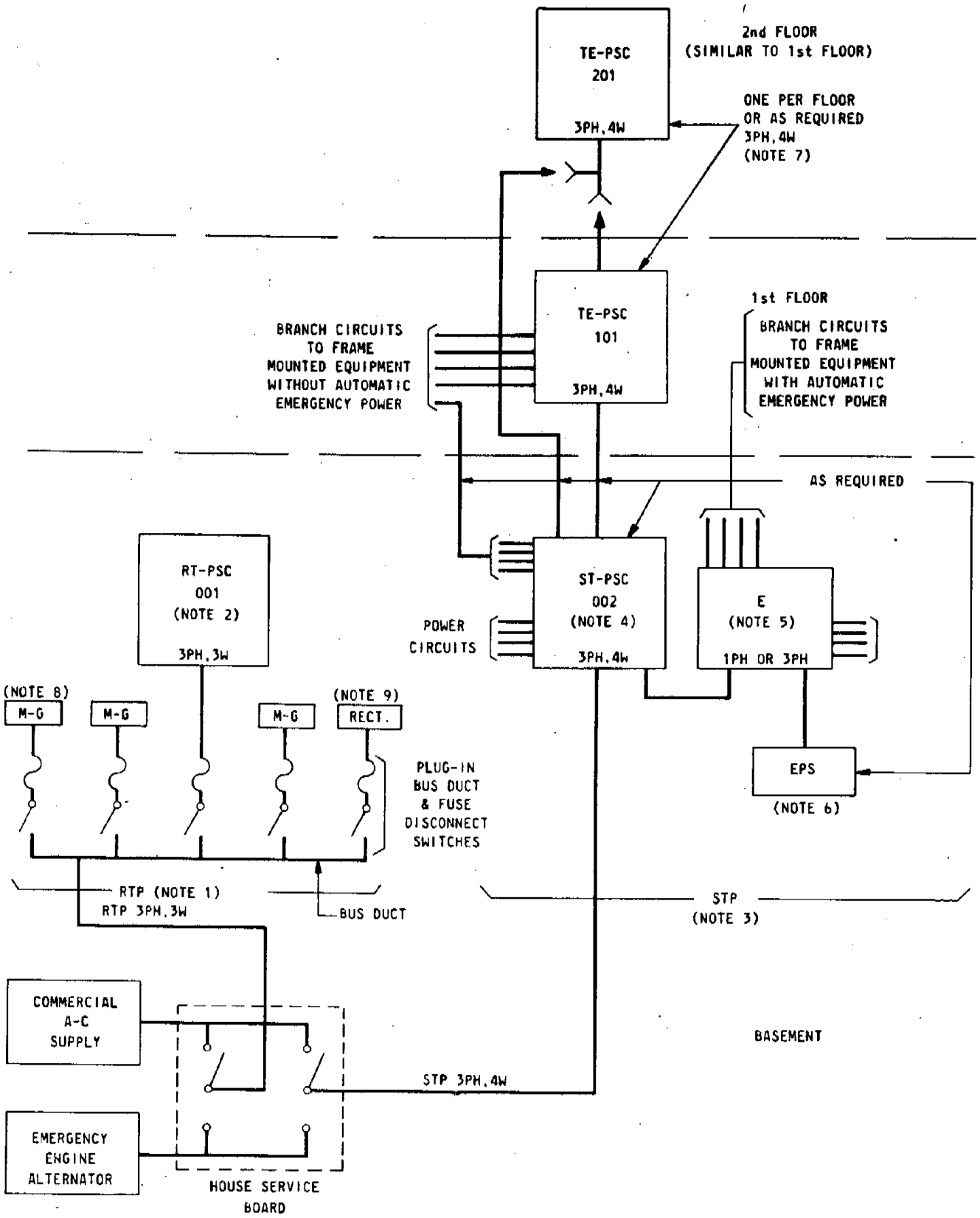

Figure 18-3 Power Service Distribution Schematic

TCI Library: www.telephonecollectors.info

TABLE 18-1

LEGEND AND NOTES ASSOCIATED WITH FIGURE 18-3

1. RTP or Regular Telephone Power Loads. Consists of battery charging equipment and miscellaneous equipment loads with engine alternator reserve.

2. RT-PSC or Regular Telephone - Power Service Cabinet. Supplies all single-phase ungrounded or small three-phase telephone power equipment loads when bus duct is used. It also supplies the MG sets of rectifiers when bus duct is not used.

3. STP or Special Telephone Loads. Consists of all AC operated equipment loads which should not be transferred to a manual or automatic start engine alternator during regular engine load test.

4. ST-PSC or Special Telephone - Power Service Cabinet. Its branch circuits feed power service cabinets on various floors and power outlets mounted on frames or walls. It also feeds the Emergency Power Distributing Cabinet or Panel.

5. E-Emergency Power Distributing Cabinet or Panel for Automatic Emergency Supplies. Supplies all AC operated equipment loads which require an automatically started emergency power supply similar to 500-type power plants.

6. EPS-Emergency Power Supply with Converter. For power service feeds to power outlets when commercial service fails.

7. TE-PSC-101 And 102 Telephone Equipment - Power Service Cabinet. For power distribution on each floor as required.

8. M-G, Motor-Generator. Used for charging the battery and floating the load.

9. RECT-Large Rectifier. Used for charging the battery and floating the load.

10. 277/480-Volts Service. When 277/480-volts service is used instead of 120/208-volts, the RTP 3-phase, 3-wire feeder would furnish 277/480-volts from the house switchboard only to equipment that is wired to accept this service. The STP 3-phase 4-wire feeder would be reduced to 120/208-volts by the use of step down transformers for all equipment that cannot operate on 277/480-volts supply.

TCI Library: www.telephonecollectors.info

18.3 CHARGING EQUIPMENT

The term "charging equipment" applies to rectifiers and motor generator sets and their associated controls, used to convert commercial power service supplies into direct current at the proper potential required for the operation of central office equipment and for charging central office batteries. Rectifiers make this conversion directly as compared with motor generator sets that convert electrical energy to mechanical energy and then to a different type of electrical energy. The output of the charging equipment is controlled to float the central office load in addition to a small conditioning charge that flows through the battery to keep the cells fully charged. When the commercial power service fails, and the charging units are stopped, the battery voltage is lowered in proportion to the amount of load and the length of time it takes to restore commercial power service to normal. Following a commercial power service failure, it is necessary to immediately charge the battery so that it can be ready for the next emergency. To expedite this recovery, a higher charging rate is used which is called the "charge voltage" as compared with the "float voltage" normally used to float the load.

Rectifiers and motor generator units are usually arranged for manual and automatic operation. The manual control is used to facilitate maintenance, adjustment and testing.

A. RECTIFIERS

A charging rectifier is commonly defined as a device for converting alternating current to direct current. All rectifying elements operate on the principle of permitting electric current to flow freely in one direction only. Basically two types of rectifiers are now used in the telephone power plant, Electron Tube and Semiconductor type rectifiers.

The electron tube type rectifiers are primarily used for battery charging or supplying plate circuits. They vary in size from a few watts to 1200 watts and are furnished for manual or automatic regulation. Electron tube rectifiers operate on the principle that a small change in voltage on the grid of an electron tube causes a comparatively large change in its output. The grid controls the flow of space current between the plate and the filament. Since the space current flows in only one direction, this rectifies the alternating current.

TCI Library: www.telephonecollectors.info

Semiconductor type rectifiers are used for battery charging, supplying current to batteryless power plants and various other types of central office loads. They are equipped for manual or automatic regulation. Their size varies from approximately one watt to 20 kilowatts and larger.

Magnetic amplifiers, saturable reactors and SCR's are used under control of transistorized printed circuit package units in modern rectifiers. The package unit consists of a voltage reference standard, an error detector and an amplifier which closely regulates the rectifier output as required. Figure 18-4 shows a 200 ampere 48-volt rectifier of this type. Modern rectifiers use silicon elements unlike previous metallic rectifiers that used germanium, selenium, or copper oxide elements for rectification of ac currents.

A new class of semiconductor being used in control circuits of charging rectifiers is the PN PN device, commonly called as silicon controlled rectifier (SCR). A rectifier, using this device, usually consists of transformers connected to a full wave bridge. The rectified voltage is blocked by SCR's in either the positive or negative output lead. The SCR is fired by a pulse over the gate lead of the SCR, from a blocking oscillator, which in turn is controlled by a transistorized error detector circuit. The conversion of electron tube rectifiers (thyratron) to semiconductor type rectifiers is now possible by using SCR devices in place of thyratron tubes.

B. MOTOR GENERATORS

The motor generator charging sets consist of a direct current generator directly coupled to a 200/230 or 440 volt 3-phase, 60-cycle alternating current induction motor. Alternating current service is practically universal at the present time. However, in a few older offices, in some larger cities, direct current commercial power is still furnished thus requiring the use of direct current motors.

TCI Library: www.telephonecollectors.info

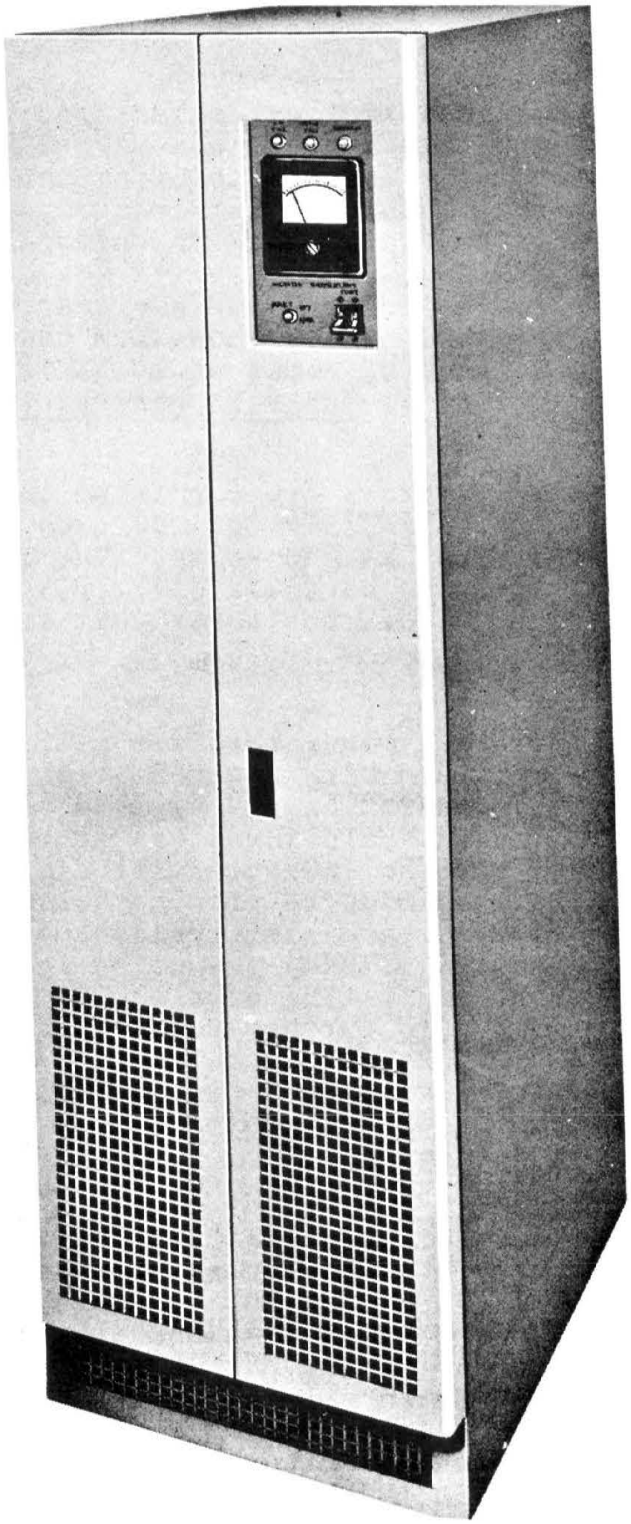

Figure 18-4 200 Ampere 48 Volt Semiconductor Type Rectifier

TCI Library: www.telephonecollectors.info

Since storage batteries decrease in voltage when discharging and require a voltage somewhat higher than the "normal" or "floating" voltage to bring them up to a fully charged condition, it is necessary that the charging generators have a controllable wide voltage range. The generators for charging 24 volt batteries have a voltage range of about 22 to 33 volts and are generally referred to as "33 volt generators" while those for charging 48 volt batteries have a range of about 44 to 65 volts and are generally referred to as "65 volt generators."

Charging generators are furnished in sizes of 600 to 1500 amperes at 24 volts, 500 to 1200 amperes at 48 volts and 100 to 300 amperes at 130 volts. The generators are of the commercial type and have largely replaced the "M" and "Diverter Pole" types due to lesser cost and standardized features.

Commercial type generators are self-excited (shunt wound) and are provided with a commutating field winding for satisfactory commutation at any load between no load and rated full load. Field rheostats are used to control the output voltage. The characteristics of the armature and commutator are such as to produce noise in the generated current and for this reason interpoles and other design features are utilized to keep the noise level at a minimum. However, a filter, consisting of a choke coil and condensers, is required to further reduce the noise to the point where it will not affect the quality of transmission.

C. AC INDUCTION MOTORS

Since alternating current commercial power is available in practically all localities, the motors for driving the dc generators are usually ac induction motors. However, in the past a few synchronous motors were used because of power factor considerations. Synchronous motors are more expensive than induction motors and require a more costly starting mechanism. In view of the higher initial costs and because power factor correction can be more economically accomplished by means of capacitors, synchronous motors are in general not being specified for motor generator use in telephone power plants.

TCI Library: www.telephonecollectors.info

The ac induction motors generally used are of the squirrel-cage type and are capable of continuously driving the dc generator at the specified maximum voltage and rated load under any condition of commercial power service within the limits of 190 to 253 volts or 400 to 500 volts depending on the list number and 58.8 and 61.2 cycles per second. They are also capable of carrying without injury to the equipment a 50 percent momentary current overload on the generator.

D. POWER FACTOR

This term is used to indicate a relationship between the ac current wave and voltage wave. If these waves are in phase with each other, this condition is known as "unity power factor." If the current wave lags behind the voltage wave, due to the reaction of inductive loads (such as motors, etc.) this is termed a "lagging power factor," and when the current wave leads the voltage wave it is termed a "leading power factor." Since the technical explanation of power factors is quite complicated it will, therefore, merely be pointed out here that a low power factor results in "wattless" current or current which does no useful work, but heats up the conductors and increases the voltage drop. This condition is observable with a power factor meter, a phase angle meter or a varmeter, which may be mounted on the power board. Some commercial power companies have a form of contract for power service which includes a penalty for power consumed by electrical equipment which operates at a low power factor. One means of power factor correction is by the use of capacitors which in general are associated with the motor starter circuit. They consist of metallic enclosures containing pyranol condensers.

E. MOTOR STARTERS

The various types and sizes of motors used in power plants require different types of starters. For small motors, the starter may consist simply of a tumbler switch associated with thermal cut-outs, or fusetrons, to protect the motor against overloads or abnormal currents. From this simple starter, the types progress to apparatus of a complex nature, such as the automatic starting compensators for polyphase ac motors. Some of those most commonly used in medium and large sized power plants are briefly described.

1. Across-the-Line Type

These starters are usually employed with motors from 1.5 to 15 HP where the starting current is sufficiently low to permit the motors to be

TCI Library: www.telephonecollectors.info

started by connecting them directly across the line. They are furnished in either manually operated or automatic types. Both types include a magnetic contactor (electrically operated switch) for closing the circuit to the motor and a temperature overload relay which opens the circuit to the operating coil of the contactor in case of an overload. The contactor and overload relay are mounted on an insulating base and enclosed in a sheet metal housing. A reset button is provided in the cover for manually resetting the temperature overload relay after it has been operated due to an overload.

The manually operated type employs "start" and "stop" buttons, which may be located on the power board or other location, for controlling the operation of the magnetic contactor.

The automatic type is equipped with a 24 volt dc relay, (with a resistance for use on 48 volts) for controlling the operation of the magnetic contactor. This relay is operated by the control circuit in an automatic power plant.

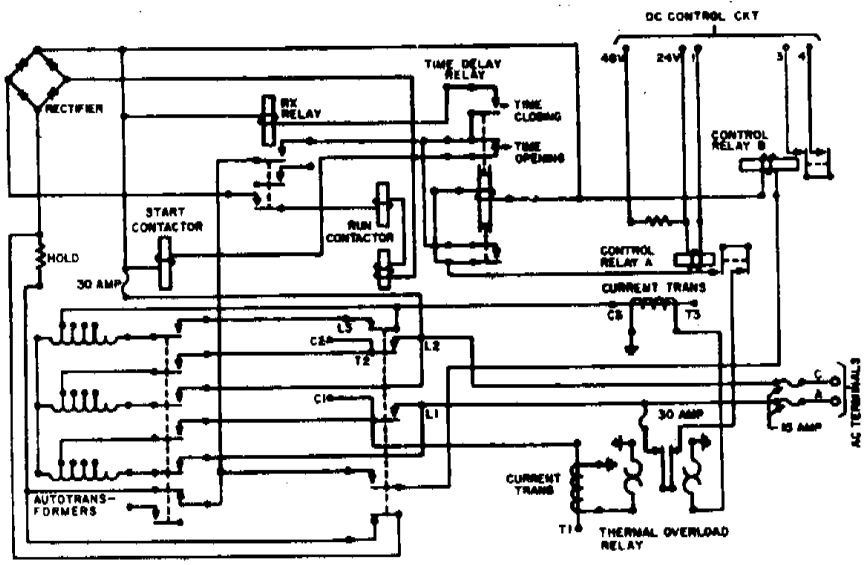

Figure 18-5 Motor Starter Schematic

TCI Library: www.telephonecollectors.info

2. Autotransformer Type AC Starter

The primary purpose of this type starting compensator is to limit the starting current of the larger ac motors (15 HP up) and to provide automatic starting. Each ac starter consists of a polyphase autotransformer with taps, a multipole starting contactor for connecting the autotransformer to the line and the motor to the autotransformer low-voltage taps, a running contactor for connecting the motor directly to the line, a definite time delay which, after a predetermined time, causes the starting contactor to open and the running contactor to close, and overload relays which open the running contactor in case of overload. As the motor rotates, it drives the adjustment dial until a projection on the dial actuates a switchette, thereby operating contacts to control the opening and closing of the start and run contactors. A control relay is mounted in the starter case and connected for operating the starter. The control relay is for use on 20 to 28 volts direct current. A series resistor is furnished for connecting in series with the relay coil for operation on 42 to 52 volts direct current. The complete equipment is mounted with a sheet metal case. A schematic and picture of a 3-phase automatic ac starter are shown in Figures 18-5 and 18-6 respectively.

Where manual start control features are required, manual starters may be used instead of automatic starters. Motor Generator Sets with manual starters are generally used as supplementary units to aid those under automatic control that normally carry the office load. Manual starters for the larger motors (larger than 15 HP) may be identified by the operating handle on the outside of the case with three different positions marked as "OFF," "START" and "RUN."

F. RHEOSTATS

Field rheostats are used to control the current output of generators by regulating the generator field current. There are two kinds: hand operated and motor driven, both are used in series in automatic plants. The hand operated rheostat is preset at the charge voltage for the regular and emergency batteries.

TCI Library: www.telephonecollectors.info

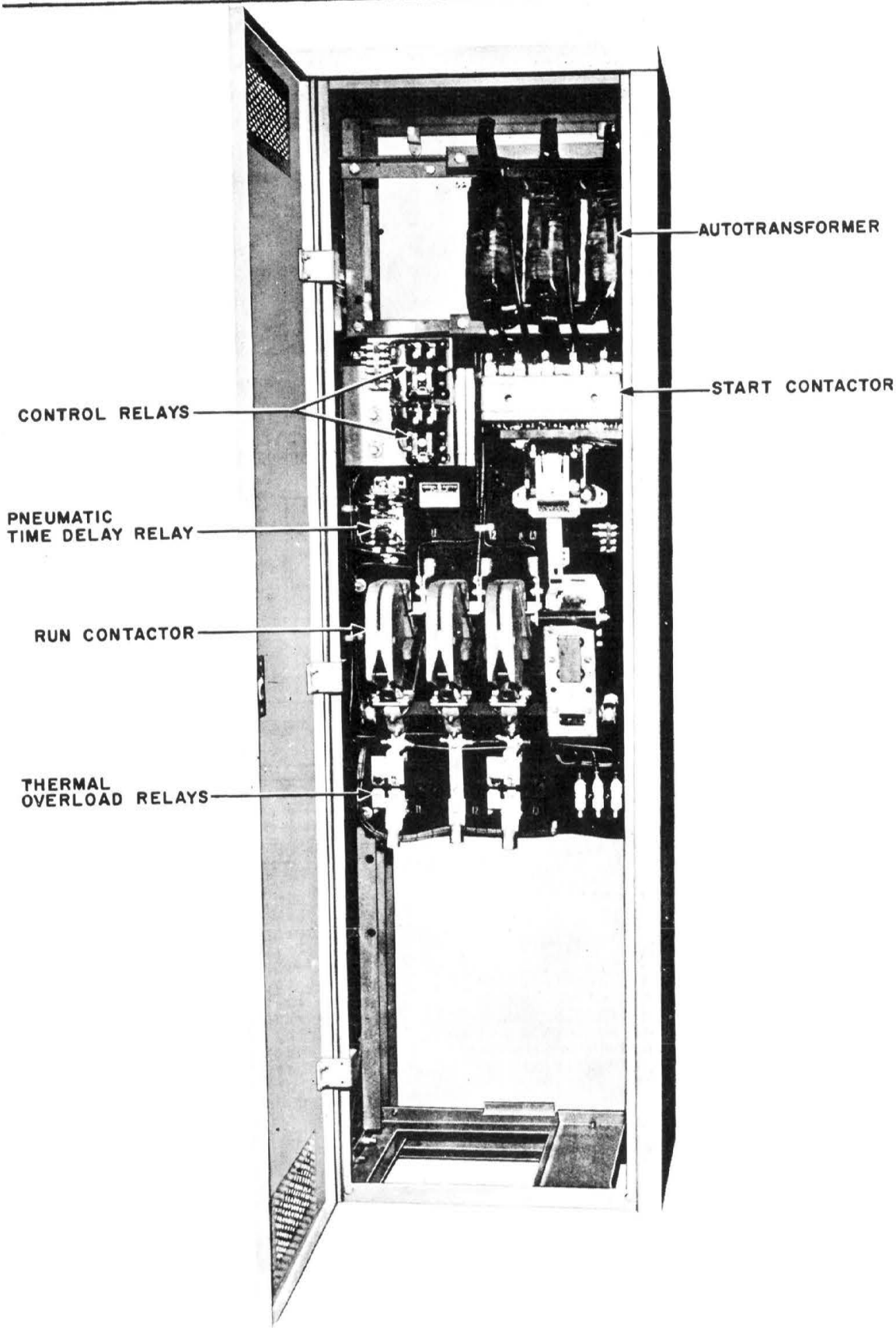

Figure 18-6 Typical Motor Starter

TCI Library: www.telephonecollectors.info

Each rheostat is made up of one or more circular plates on which are mounted contact buttons for terminating the resistance elements. Movable arms, with contact shoes, are provided for varying the amount of resistance in the circuit. To permit the dissipation of heat generated, the apparatus is not enclosed.

Hand operated field rheostats (Figure 18-7) are mounted on the rear of the generator control panels associated with the motor generator units. Handwheels on the front of the board are connected to the movable arms for varying the resistance. Interpolating rheostats have two sections: a main section consisting of coarse resistance steps covering the entire operating range of the associated machine and an interpolating section, consisting of fine resistance steps, which has a total resistance approximately equal to the highest resistance step of the Main Section. Dual handwheels are used, one fastened to a hollow shaft and the other fastened to a solid shaft which passes through the hollow shaft. The smallest handwheel fastened to the inner shaft controls the interpolating section.

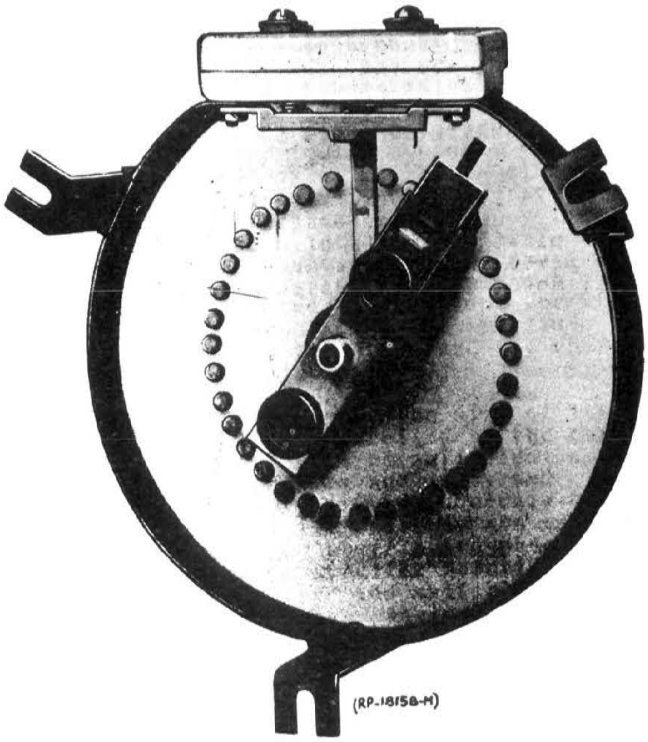

Figure 18-7 Generator Field Rheostat

TCI Library: www.telephonecollectors.info

The motor driven field rheostat used in automatically regulated power plants consists of a circular resistance plate and contact arm operated by a small motor driven through a speed reducing mechanism. This contact arm may be operated in either direction, shunting all or a portion of the total resistance of the plate. Limit switches, which open the motor circuit, are provided to prevent the operation of the contact arm beyond the end contacts. Control circuits actuate the motor drive through relays designated RAISE and LOWER to increase or decrease the output of the charging unit. Arrangements are also available for actuating these relays by means of manually operated keys. The motor driven rheostat is usually mounted near the bottom of the generator control bay.

18.4 CONTROL AND DISTRIBUTION

This section describes the principal items of equipment and apparatus employed to control the operation of the power plant and for controlling the power plant output. Some apparatus that might be considered in this category has been previously described in paragraph 18.3 because of its close association with the operation of charging units. Most of the apparatus described in this section is mounted on the power board or charging unit control panel.

The use of automatic power plants and automatic emergency cell switching, voltage regulation, etc., have led to the use of many new devices. Because of the wide variations in size and operating characteristics, the following descriptions are necessarily limited to a brief outline of the purpose and basic operation of each type.

A. POWER BOARDS

The power board serves to centralize the various controls required in a power plant. Each bay is assembled on a box type framework that is floor supported, the bays are bolted together to form a single unit. Attached to the framework are the unit panels of steel or impregnated asbestos that mount the fuses, switches and other control equipment. Steel panels are also furnished for closing in the ends of a power board. The power board framework also supports the associated cable racks and bus bars.

TCI Library: www.telephonecollectors.info

The main control bay of a large power board mounts the various voltage control and alarm relays together with the fuses, lamps and keys associated with these circuits. Emergency cell trickle charging rectifiers are usually mounted on this bay except when a separate rectifier bay is necessary.

The battery control board portion of a power board, is used as a switching center and distributing point for power to the telephone central office. Two or more bays mount the emergency cell switches, the main charge fuses, a discharge ammeter and voltmeter, voltage relay and the various sizes of discharge fuses required for central office loads. The emergency cell switches in most power plants operate automatically to connect or disconnect emergency cells as required. A battery control board is shown in Figure 18-8.

Small power plants usually consist of a control unit, charging equipment and discharge fusing mounted on one or more bays.

B. SWITCHES

Broadly, the term "switch" applies to any device used for opening and closing a circuit or for transferring the continuity of a circuit from one path to another. In the past, most switches were of the manually operated knife blade type, either single throw or double throw and equipped with one or more poles (current carrying blades). As power circuits became more complicated and many operating features were automatically controlled, switches likewise became more complex in character. Additional features were added to the knife switches, and electrically operated switches known as "contactors," "multipole electrically operated switches," "motor-driven emergency cell switches," "emergency lighting relay switches," "control relays" and others were introduced. In a modern power plant, most of the switches are of an electrically operated type, except for the knife switches associated with the discharge fuse and switch units and the charge switches on generator panels. Figure 18-9 shows various type switches.

TCI Library: www.telephonecollectors.info

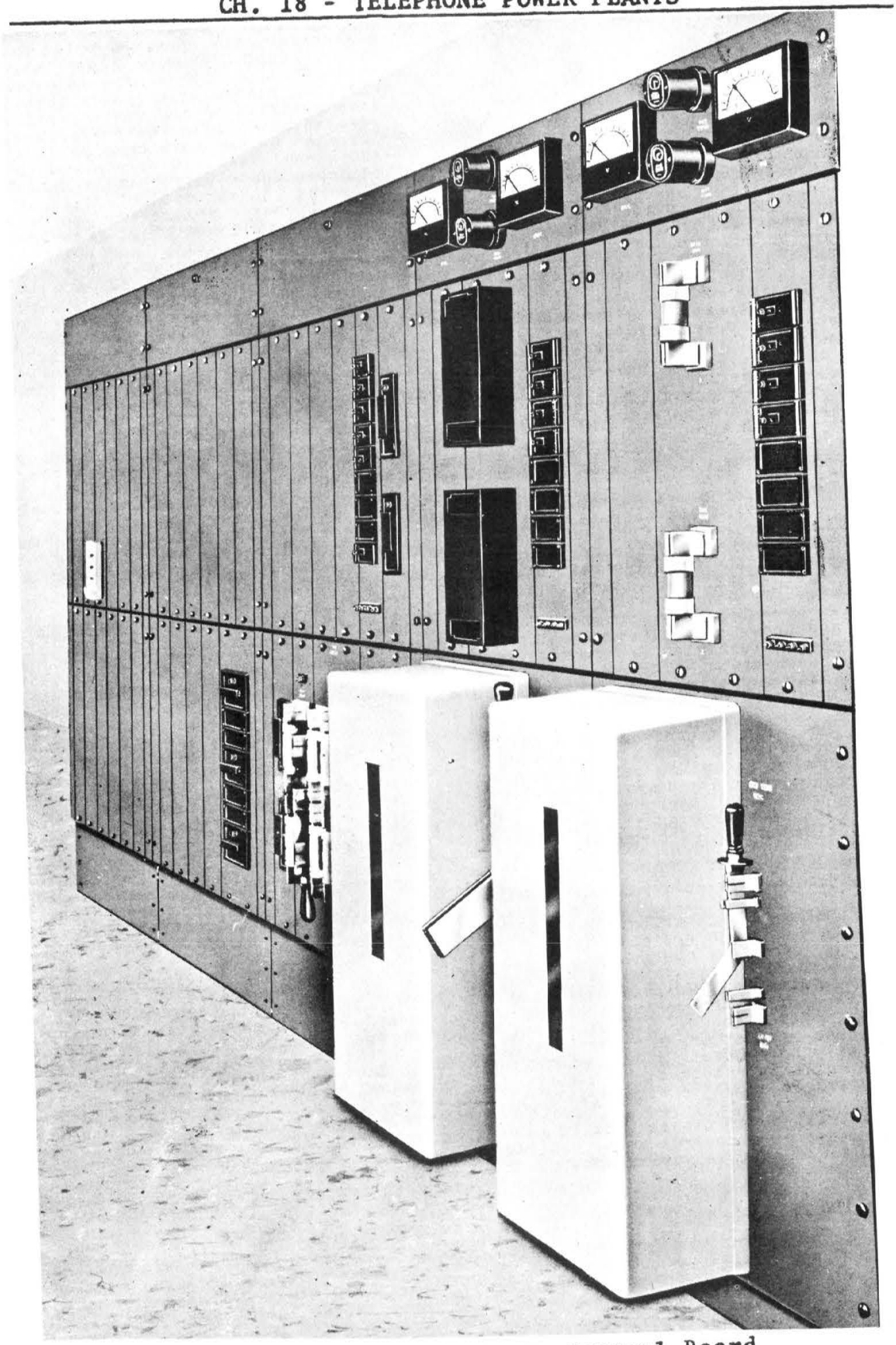

Figure 18-8 Battery Control Board

TCI Library: www.telephonecollectors.info

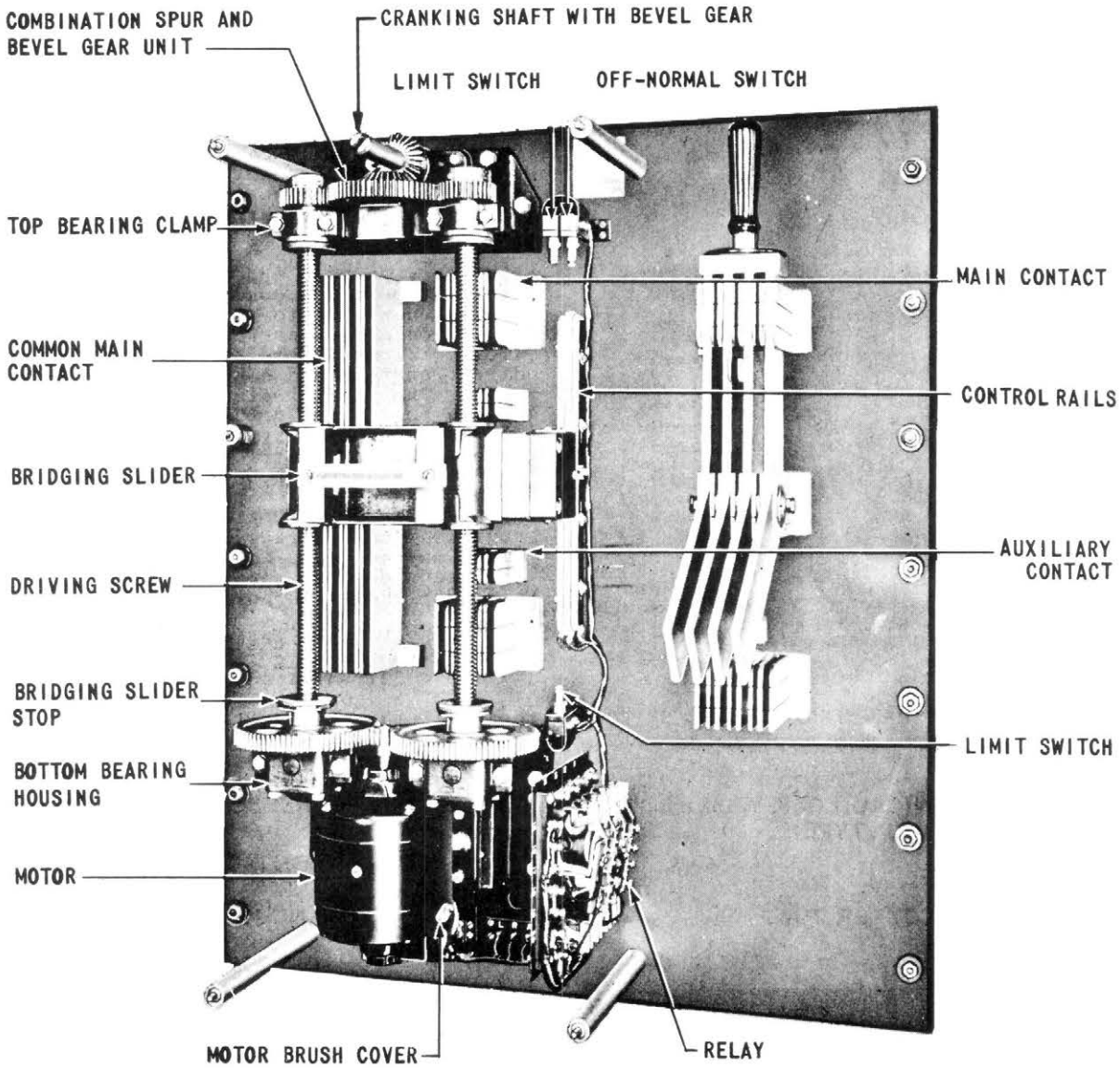

Motor-Driven Slider Type Switch

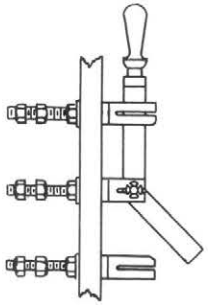

Rocker Type Knife Switch
Manually Operated

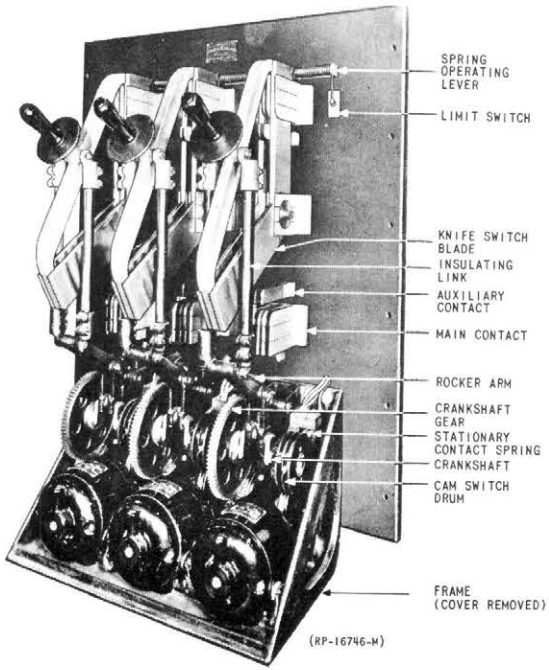

Motor-Driven Knife Blade Type Switch

Figure 18-9 Emergency Cell Switches Mounted On Battery Control Board

TCI Library: www.telephonecollectors.info

Knife Switches: The size of the switch is controlled by the current flow. There must be sufficient copper in the knife blades and jaws, and suitable contacts to provide adequate carrying capacity. Knife switches are usually mounted on unit type power board panels arranged to perform specific functions; such as discharge fuse and switch panels, battery transfer switch panels, emergency cell switch panels and the like.

Manually operated emergency cell and C.E.M.F. cell switches are usually of the rocker type. They are mounted on a unit panel in groups of 2, 3 or 4 depending on the number and arrangement of the cells to be switched. The switches are equipped with auxiliary contacts and current limiting resistors to limit the flow of current as the cells are momentarily short circuited through the resistors when the switches are operated. Mechanical interlocks are provided to insure the proper sequence of operation.

Automatically operated emergency cell switches are used in modern power plants where unattended operation is desired. The switches are motor driven and operate under the control of a voltage relay.

The rotary cam type switch consists of a camshaft with a set of conducting cams which mate with stationary main contacts in proper sequence of operation. A set of laminated studs is provided with strapping and two resistors to limit the short circuit current of the cells being switched. A set of auxiliary cams on the camshaft actuate microswitches to provide external signals and through a reversing relay, control the driving motor and rotation of the switch. The switch may be operated manually by uncoupling the gear train.

The slider type switch is a three position switch equipped with the necessary relays, auxiliary contacts and limit switches for controlling its operation. The switch consists of a bridging slider and main contact blades that make contact between a main rail and one of three main contacts depending on the slider position.

The motor driven rocker type switch is composed of three knife type switches operated by means of a linkage system and motor for each switch. Cam and limit switches are provided for each motor and its associated switch to insure operation without interruption and transfer control to the next motor unit for proper sequence of operation. Manual operation of each switch can be achieved by removing the link. Auxiliary contacts and current limiting resistors protect the switch contacts from damage during temporary short circuits as the emergency cells are connected.

TCI Library: www.telephonecollectors.info

A discharge fuse and switch unit consist of a double-throw knife switch associated with two fuses. The two fuses are connected in series with the discharge lead but the knife switch short circuits one of them. Should the other fuse operate, the switch can be thrown, thereby short circuiting the operated fuse and placing the good fuse in the circuit. After the operated fuse is replaced, the switch blade may be returned to its normal position.

Safety type switches consist essentially of knife type switches mounted on an insulating panel and enclosed in a metal cabinet. A handle on the outside of the cabinet operates the switch. They are furnished in single-throw and double-throw type having fuse clips of the proper capacity mounted on the panel. They range in capacity of 30 to 1200 amperes and are used principally for controlling circuits carrying primary commercial power supply voltages.

Saftofuse units serve as switches in many applications. The insulated saftofuse unit which carries the fuse may be removed from its holder, thereby opening the circuit. This unit may then be placed in the holder reversed, exposing the fuse to view as an indication that the circuit is open.

Emergency lighting relay switches function to automatically connect emergency lighting circuits in case the regular service voltage fails or decreases below a predetermined value and to disconnect the lamps from the emergency service upon restoration of the regular service voltage. The emergency lighting switch for use on single-phase power service is essentially a magnet switch of the mechanically-latched type with a self-contained closing coil and an undervoltage tripping device. Emergency lighting switches for use on polyphase services are similar to the single-phase switches except that additional undervoltage relays are included. A terminal block is provided for connecting the grounded side of the emergency lighting system. A test switch or switches are provided on the panel for simulating a power failure for testing purposes. Emergency lighting switches are double-pole single-throw, are available in capacities of 30, 60 and 100 amperes per pole and are suitable for use on 115 and 230 volt single phase and 200 volt three phase, 60 cycle regular lighting services and on 24 and 48 volt dc emergency lighting services. They are available in either flush mounted or surface mounted cabinets or on panels without cabinets.

TCI Library: www.telephonecollectors.info

Multipole Electrically Operated Transfer Switches are used on ringing power boards to transfer ringing, tone and signaling leads from the regular ringing machine to a reserve machine in case of a primary commercial power failure or other emergency affecting the output of the regular machine. It is operated by electromagnets, and transfers 12 circuits from one set of 12 contacts to another set of 12 contacts. The switch is held closed on one throw when the operating coils of the magnets are energized, and held closed on the opposite throw by springs, when the coils are de-energized.

C. CONTACTORS

The term "contactor" is used to designate a type of relay that can safely conduct higher currents through its contacts than can be conducted over the contacts of its associated control relay. The main contacts (1 or 2) are operated by an electromagnet, which in turn is controlled by power circuit control apparatus such as control relays. They are arranged for front or rear-of-board connection, that is, the terminals may be on the front or brought through to the rear of the power panel. The operating parts are on the front. The larger sizes are usually provided with magnetic blowout coils connected in series with the main contacts and arc shields which form a chute into which the arc is blown by the magnetic blowout. The contactors in some cases are equipped with one or more sets of auxiliary contacts for performing associated circuit functions. They are furnished in various types such as single-pole, double-pole, normally-open or normally-closed types; and they range in size up to 1500 amperes capacity for the normally-open types and 300 amperes for the normally-closed type.

Normally-open contactors are those on which the main contacts remain open when the electromagnet is not energized. Normally-closed contactors have the main contacts held closed under spring pressure and are open only while the electromagnet is energized.

D. CONTROL RELAYS

Many types of electrically operated power apparatus (such as contactors, motor operated emergency cell switches, etc.) require more current to operate them than the originating control device such as a key, telephone relay or voltage relay will carry. It is therefore, necessary to have the originating control device operate a "control relay" which in turn operates the larger

TCI Library: www.telephonecollectors.info

apparatus. Control relays are furnished in many types and sizes to meet various operating conditions. They may be furnished with one to four contacts and with front contacts, back contacts, or combinations of both. Some types operate on direct current and some on alternating current. The smaller sizes have contacts intended to carry one or two amperes and some of the larger sizes may carry up to 30 amperes under certain conditions. The control relays, arranged for back of board connections and mounted on power board panels, are usually fitted with glass or sheet metal covers. Those arranged for front connections may not have covers, although some are enclosed in sheet metal housings, when they are not located on power board panels.

E. VOLTAGE RELAYS

Voltage relays are used to operate alarm circuits and control emergency cell switching circuits and charging rates for battery charging units when the voltage reaches a predetermined high or low value. Each voltage relay is furnished for a specified voltage range. The relay is so designed and adjusted that the "low" contact will make at its rated low voltage limit and the "high" contact will make at the rated "high" voltage limit. The contacts are also adjustable to a limited extent, within the range of the particular relays, the method of adjustment depending on the type of voltage relay used. Broadly, voltage relays fall into two general types, the moving coil type and the solenoid type. The current carrying capacity of the contacts of both types is limited, so they are arranged in the circuit to operate telephone type relays which in turn operate alarm circuits, control relays or other equipment.

The moving coil type voltage relay is similar to a standard voltmeter in general construction except that the moving arm is provided with contacts. The cases may be designed for either flush or surface mounting depending on the type used. Shielded type voltage relays are provided for applications where the accuracy of operation might be affected by the field created by the presence of current carrying leads.

The solenoid type voltage relay employs a solenoid with a floating core linked to a pivoted contact arm. Holding coils are provided, one connected in series with each contact. These coils, when the contacts close, tend to hold them tighter. The holding effect of the coil is adjustable, and the contacts are adjustable. This type voltage relay is in general used to regulate the discharge voltage of power plants by controlling the automatic switching of EM cells and CEMF cells.

TCI Library: www.telephonecollectors.info

F. AMMETER RELAYS

In automatic power plants, ammeter relays are connected in the output circuit of the charging machines as part of the control circuit equipment for the starting and stopping of individual charging units as the office load varies. The ammeter relay resembles a conventional ammeter in appearance but the moving pointer is equipped with contacts which make on "high" or "low" stationary contacts.

Each ammeter relay consists of a millivoltmeter of the D' Arsonval type for use with an external shunt. Suitable shunts, connected in series with the charging unit output, are available in capacities of from 25 to 1500 amperes inclusive. The moving pointer is provided with a set of insulated contacts which move with the pointer and make contact with corresponding contacts on two stationary pointers (high and low). The ammeter scale is calibrated to correspond to the output of the associated charging unit; such as 0-400 amperes for a 400 ampere unit. Each meter is enclosed in a pressed steel, circular, dust-tight, moisture-proof case with a removable cover.

The high and low contacts are adjustable and are equally adjusted at the factory. The high contacts are adjustable by means of an adjusting screw outside of the case. The low contacts are adjustable by means of an adjusting screw located under the case.

In an automatic power plant, the low contacts are set at a point which will cause the charging unit to be shut off through the control circuit. The high contacts when operated cause the motor driven field rheostat to stop so that the charging unit will not be overloaded and at the same time, when furnished, starts up the next charging unit, connects it to the battery and increases its output as required to carry the office load.

The contacts of ammeter relays are limited in their current carrying capacity and, therefore, they are arranged in the circuit to operate telephone type relays which in turn operate control relays or other apparatus required for controlling the output of the charging units.

TCI Library: www.telephonecollectors.info

G. AUTOMATIC VOLTAGE REGULATORS

In general, the purpose of an automatic voltage regulator is to control the output of a charging unit to float the office load and maintain the battery voltage within specified float or charge voltage limits.

Since the output of a generator depends upon the generator field strength, it is necessary to change the field strength as the load and voltage tend to vary. An automatic voltage regulator which responds to changes in voltage is, therefore, used to control the field strength of the generator to accomplish this purpose. Several types of automatic voltage regulators are used depending on the size and characteristics of the generators involved.

Voltage regulators are also used to control ac line voltages where power service line voltage variations exceed the allowable voltage variation of the equipment. They may be either the magnetic type with no adjustments to control the degree of regulation or a motor operated variable transformer type which controls the voltage applied to an auxiliary transformer to correct for changes in line voltage and load.

1. Voltage Controller

The voltage controller shown in Figure 18-10 is mounted on the battery control board of the power plant involved and consists of a solenoid coil and plunger operating a contact lever which controls two sets of contacts, a main set and an auxiliary set. These contacts operate in conjunction with a cam which is driven by a synchronous type single phase motor. The main contacts make and break with the toothed part of the cam and the auxiliary contacts make and break with the solid disc part.

The rotating cam and disc permit the "high" or "low" contacts to make every 10 seconds if the movement of the contact arm places them in a position to make. This allows time for the motor driven rheostat, located on the charging unit control panel and operated through control relays, to function and the regulated voltage to stabilize between the contact intervals.

TCI Library: www.telephonecollectors.info

2. Motor Driven Centrifugal Type Automatic Voltage Regulator

These regulators are usually mounted on the power board. When used for ac ringing generators, the ac voltage to be regulated is fed to the regulating motor through an autotransformer and a copper oxide rectifier, both of which are part of the regulating unit.

This type consists of a permanent magnet excited dc motor which is connected to a centrifugal type regulator enclosed in the same housing. The regulator includes contacts which in normal operation open and close rapidly, in turn opening and closing a shunt circuit across part of the resistance which is in series with the generator field, thereby varying the field excitations of the ringing generator. The dc motor, which is connected to the output circuit of the ringing generator being regulated, increases or decreases in speed as the voltage varies.

As the ringing generator voltage drops and the regulator speed slows down, the contacts close the short circuiting part of the ringing generator field resistance thus strengthening the field and increasing the voltage. The increase in voltage causes the regulator motor to speed up. The centrifugal action on the weights causes the contacts to open and again insert the field resistance in the circuit, thus weakening the field and descreasing the ringing generator voltage. Rapid cutting in and out of the resistance in the field circuit provides an effective excitation which gives the desired voltage. An adjusting knob and dial is provided on the end of the frame to increase or decrease the regulated generator voltage.

TCI Library: www.telephonecollectors.info

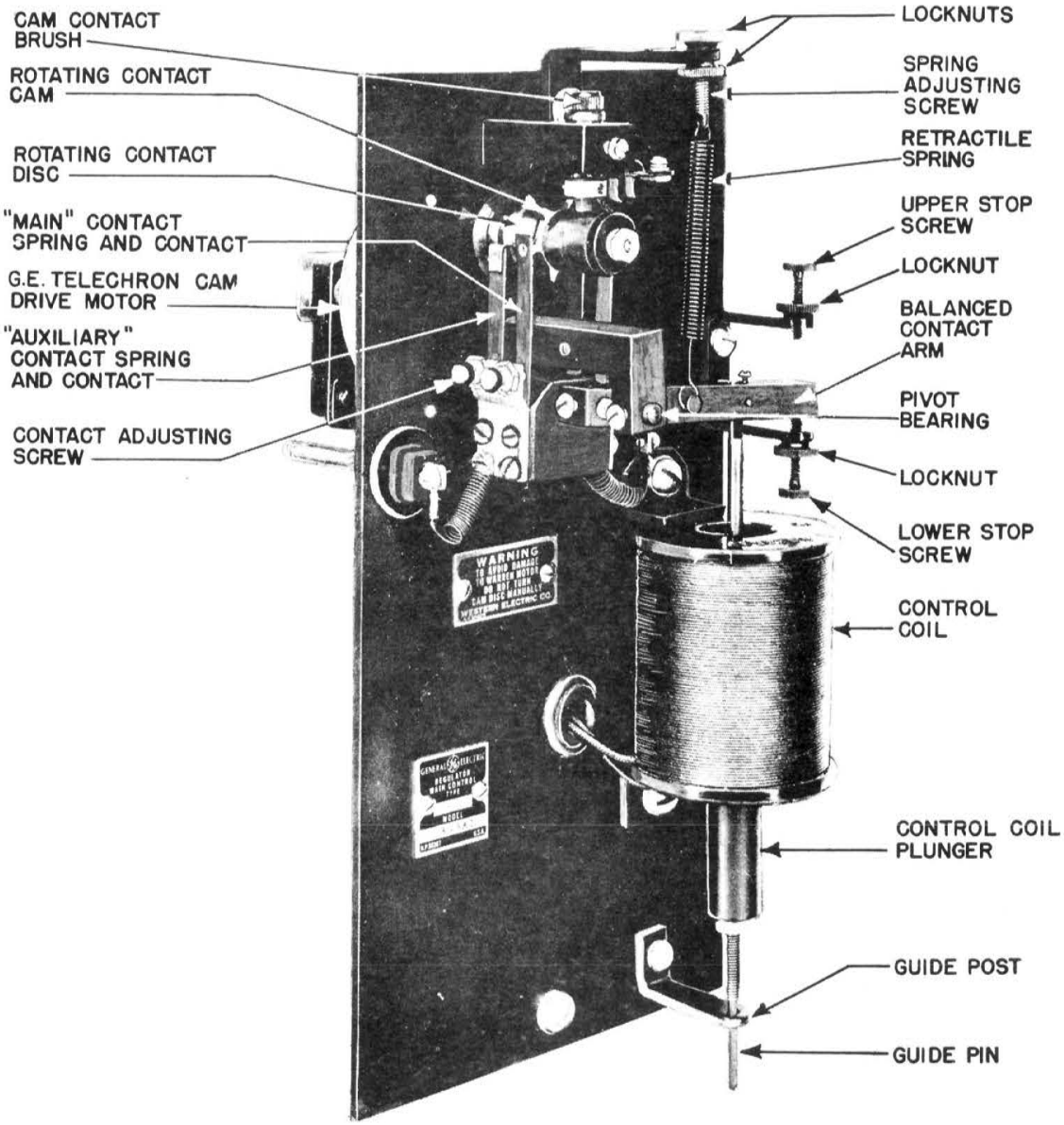

Figure 18-10 Voltage Controller

TCI Library: www.telephonecollectors.info

3. Contact Type Speed Voltage Regulators

They are designed to control the speed (frequency) and voltage of battery driven ringing machine (initially used on the 804C Ringing Power Plant), by operating on the respective motor and generator fields. The mechanical contact type regulators, used for this purpose, control the resistance of these field circuits by sampling the 20 cycle output voltage of the ringing machine and thus maintains the frequency between 18-1/3 - 20 cycles and the voltage between 84-88 volts.

This type regulator consists of a sensitive solenoid or actuating element which moves an armature which, in turn, operates a push bar. The movement of the push bar governs the position of the direct acting fingers and determines the amount of resistance in the regulated circuit. In the "no voltage" position, all ten fingers are closed and the regulating resistance is at the minimum value. As the voltage on the solenoid is increased, the pull of the reference springs is overcome and the fingers pushed from the associated contact bar, thereby increasing the resistance in the regulated circuit. An air dashpot, with an adjusting screw, is provided to obtain optimum speed of response.

The regulator is arranged for pin jack mounting in a suitable receptable with soldering type terminals, for connecting the external regulating resistances and the solenoid wiring.

4. Rectifier Type - Electronic Control Voltage Regulator

This equipment is used with 24 and 48 volt motor generator sets in the 302A power plant. When properly connected to the field of an appropriate motor generator set and the power plant control circuit, it provides high grade regulation of the average battery float and charge voltages, which are adjustable. In addition, this equipment automatically protects the motor generator set from excessive overload. All parts are designed for long life and, with the exception of the electron tubes, should not normally require replacements.

TCI Library: www.telephonecollectors.info

The voltage regulator and exciter are combined. The voltage regulator monitors the central office battery voltage and compares it to a reference voltage standard. When deviations from the standard are detected, information is transmitted to the exciter which, in turn, changes the field current of the generator to increase its output and return the battery voltage to the proper value.

Battery voltage deviations are primarily caused by changes in office load. If these deviations exceed the capacity of the regulated charging generator, the voltage regulator automatically switches from constant voltage to constant current to protect the machine from overload.

This equipment also regulates for changes in the ac input voltage rendering the output of the regulated machine virtually insensitive to ac input voltage changes. It is mounted on a framework designed to fit into the bottom of the control bay of the regulated motor-generator set. One is used for each regulated machine.

H. AUTOTRANSFORMERS

Autotransformers are used to control ac output voltage, particularly in L type carrier plants. Here constant current high voltages are required at main stations to feed a series circuit consisting of auxiliary repeater stations. The output voltages required must be maintained within close limits in certain applications. In these instances, two connected in series and referred to as Course and Fine adjustment autotransformers, are used.

They normally consist of a single-phase reversible motor which is coupled through a gearing arrangement to a brush mechanism which is moved across the commutating surface of the autotransformer.

The magnitude of the voltage output is controlled by the position of the brush on the autotransformer commutator which changes the winding ratio. With this arrangement, an output voltage may be obtained within required limits.

TCI Library: www.telephonecollectors.info

Limit switches are furnished which function with a motor control circuit to stop the brush travel when predetermined positions are reached on the commutator segment.

The motor of the unit may be controlled by relays or an electronic regulator, which in turn is controlled by a voltage sensitive bridge circuit.

I. METERS

To provide a visable means for determining the characteristics and the amount of current flowing in the power circuits, meters are provided. They are usually mounted on the power board or machine control panels.

Ammeters: Ammeters are used to indicate the current flow in amperes between the batteries and distributing fuse panel, between the generators and battery or at other points where such information is useful in operating the plant. Under certain conditions, an instrument switch may be used to permit one ammeter to be switched from one circuit to another, such as to a charging or discharge circuit. Where the generators vary in size, it is the usual practice to provide ammeters of the proper range for each machine. In connecting an ammeter to a circuit, an ammeter shunt (of the proper value for that ammeter) is connected in series with the circuit. The terminals of the instrument are connected to the terminals of the shunt either directly or through the instrument switch. Most of the current flows through the shunt and only a very small portion is bypassed around the shunt through the meter. When the amount of current to be measured is comparatively small, this shunt is sometimes self-contained in the ammeter case.

Voltmeters: The voltmeter is used to indicate the voltage (or potential) of a circuit. It is connected directly across the circuit to be measured by means of fused leads. An instrument switch is sometimes used to connect one meter to more than one circuit, such as to one or more generators or to a battery to which the generators may be connected.

Wattmeters: Wattmeters are used at emergency engine driven alternator installations when it is necessary to know the actual kilowatt output of the alternator when carrying the office load.

TCI Library: www.telephonecollectors.info

Frequency Meters: These are used to indicate the frequency of alternating current. When furnished with an emergency engine driven alternating current generator (alternator), it indicates the frequency of the alternator output and also checks on the engine speed which is directly proportional to the frequency.

Power Factor, Phase Angle and Varmeters: These are used on installations where the commercial power company imposes a penalty for operating at a low power factor, and where either synchronous motors or static condensers are provided for "boosting" the power factor. They are special ac wattmeters arranged to indicate the power available in a circuit.

18.5 RINGING, TONE AND SIGNALING EQUIPMENT

In the operation of a telephone plant, ringing, tone and interrupted currents are of almost equal importance to those obtained from the charging units and their associated batteries. These currents, which are supplied by the "ringing power plant," are used to operate the bells at subscribers' stations, to signal from one office to another for establishing trunk or toll connections and for providing the various kinds of tone and signaling current necessary in the operation of the central office. Continuous service of the ringing power plant output is therefore required. For this reason reserve equipment is furnished for use when failures occur in the regular equipment or when there is an interruption in the commercial power service.

Ringing current, tones and interrupted signal requirements differ for dial, toll and repeater equipments. The type of ringing equipment required to furnish these needs is influenced by the central office size. In general, the output of the ringing power equipment usually embraces the following types of current, or combinations:

Ringing current, at a frequency of approximately 20 cycles, is furnished for ringing subscribers' bells. For passing ringing signals over toll circuits, 1000-cycle ringing current is usually employed.

Tone current is used to audibly transmit circuit conditions such as "busy signals," "dial tone" and the like to subscribers or to the operating forces.

TCI Library: www.telephonecollectors.info

Interrupted signaling current is employed for the ringing and silent intervals for machine ringing, flashing supervisory signals and for other purposes where periodically interrupted or timed pulses are required in performing central office operating functions. Interruptions of 60 IPM (interruptions per minute) and 120 IPM are commonly used in many types of central offices and in addition, interruptions of one, two, three or four seconds and combinations, thereof are used in central offices arranged for machine ringing.

Coin control current is generated by the larger size ringing machine for controlling the "coin collect" and "coin return" features of pay stations. Positive and negative 120 volt direct current is used for this purpose. In smaller central offices, dry cell batteries are used to provide the coin control current.

A. RINGING SYSTEMS

Manual ringing systems are employed in small manually operated P.B.X.'s where the subscribers' bells are rung by operating a key in the operators' keyshelf. The duration of the ringing period and the method of ringing, whether a steady long ring or an intermittent series of short rings, is entirely under control of the operator. For this service, the ringing equipment provides a steady flow of alternating or superimposed ringing current to the switchboard.

Alternating ringing current of approximately 20 cycles is employed for single party lines, where the subscribers' ringers are connected across the line, and for two party selective or four party semiselective (code) ringing, where the ringers are connected from each side of the line to ground.

Superimposed ringing current is supplied for four party selective ringing or eight party semiselective ringing. The subscribers' ringers are connected from each side of the line to ground. Superimposed ringing current is alternating ringing current superimposed on a direct current by connecting the ringing current supply in series with a battery of 36-40 volts so that the ringing current becomes, in effect, pulsating direct current. This is shown graphically in Figure 18-11. The ringing current is superimposed on a positive and a negative battery, to obtain positive and negative pulsating current. The subscribers' ringers are so constructed and adjusted that

TCI Library: www.telephonecollectors.info

each will respond to only one polarity of superimposed current. By connecting a ringer responding to negative and another responding to positive ringing current from one side of the line to ground, and two more similar ringers from the other side of the line to ground, four party selective ringing is accomplished. By doubling the number of ringers and employing "one-ring" and "two-rings," eight party semiselective ringing is obtained.

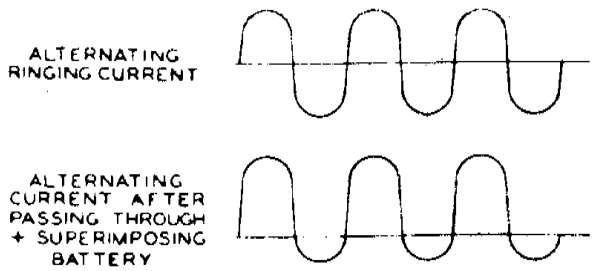

Figure 18-11 Comparison of AC And Superimposed Ringing Wave Forms

B. MACHINE RINGING SYSTEMS

The term "machine ringing" indicates that after ringing is started it continues automatically until the subscriber answers or the call is abandoned. It is employed in dial central offices and in the larger P.B.X. exchanges. In dial offices the ringing starts as soon as the connection is established to the "called" subscriber's line. The ringing current flows through a "tripping relay" circuit and when the subscriber answers, the tripping relay operates and discontinues the flow of ringing current to that line.

The ringing current supplied for machine ringing is broken up into ringing and silent intervals. These intervals vary somewhat in different types of ringing plant equipment, but in the larger plants the ringing interval is two seconds and the silent interval four seconds. For semiselective ringing where "one-ring" and "two-rings" are employed, the two rings are one second ring, one second silent. These interruptions are provided by the slow-speed interruptions which are driven by the gear ringing machine. In small plants motor driven interrupters are used.

TCI Library: www.telephonecollectors.info

In order that the tripping relay may function the instant the subscriber answers, tripping battery is furnished (also through the low-speed interrupters) during the silent interval. This silent interval tripping battery may be furnished by the central office battery or by separate cells. The direct current component of the superimposed ringing current, where this type of ringing current is employed, assists in the operation of the tripping relay during the ringing interval.

"AC-DC ringing" is employed to improve the operation of the tripping relays in machine ringing circuits where straight ac ringing was formerly used. This current is obtained by connecting central office 48 volt battery in series with the ac ringing generator. The dc component of the AC-DC ringing increases the tripping range and assures that positive tripping will occur during the ringing interval as well as during the silent interval.

The "pick-up" circuit arrangement, where one-ring and two-ring semiselective machine ringing is used, is devised to avoid the false ringing of the two-ring subscribers. The connecting circuits include pick-up relays which control the starting of the ringing interval. These relays are, in turn, controlled by the "pick-up" slow speed interrupted (PKU) on the ringing machine. By means of the pick-up circuit the ringing is always started so that both rings of the two-ring code are sounded initially as well as during the remainder of the ringing period.

C. TONES AND INTERRUPTED SIGNALS

Tones are used to audibly transmit circuit conditions to subscribers or operators. These are usually furnished as "high tone" and "low tone."

For certain purposes they are furnished as continuous tones such as "dial tone," "audible ringing tone," "number checking tone," etc. For other purposes the tones are uniformly interrupted by motor driven interrupters for such as "busy tone," "all trunks busy tone," etc. Howler tone, used for attracting the attention of subscribers where the receiver has been left off the switch hook, is provided by the high tone frequency. In the larger ringing plants, tones are produced by a tone alternator which is provided as part of the ringing machine. In smaller plants, these tones are produced by high speed

TCI Library: www.telephonecollectors.info

split ring interrupters, normally driven by small ac or dc motors or by static frequency generators. Static frequency generators usually include a varistor, condensers, resistances and transformer units potted in a metal case and are used as a source of high tone, low tone, busy tone, dial tone and audible ringing tone.

The tone alternator consists of three inductors and is wound for three different tone channels. One tone channel produces low tone, a second channel produces high tone and a third channel produces audible ringing tone. The "low tone" frequency is 660-cycles/second, the "high tone" frequency is 500-cycles/second and the "audible ring" frequency is 420-cycles/second. The audible ringing tone, when used in connection with suitable repeating and retardation coils, impresses upon the ringing circuit a tone which is audible to the calling subscriber during ringing. The tone alternator consists of a case in which are mounted a common exciting structure of Alnico (a permanent magnet type), three stators, each with a separate inductor winding for supplying tones and their corresponding rotors. It produces a uniform induced tone which is taken from the stator windings without brushes. The tone alternator case is arranged for bolting to the bearing housing of a ringing machine. A rotor spider is provided with pins for driving a low-speed interrupter.

The flux through the stator poles changes as the teeth of the rotor rotate past the stator poles and thus generates the alternating voltages in the windings on the poles. The tone alternator is mounted between the ringing generator and the low-speed interrupters.

The low-speed interrupter, which controls the ringing and silent intervals for machine ringing and for providing variously timed interruptions or signals for many other purposes, consists of a worm driven reduction gear assembly and the necessary interrupting units. In the smaller plants, the interrupting units may consist of contact springs, operated by cams. The reduction gear may be driven by the ringing machine shaft or by a small motor. Figure 18-12 shows an ac motor driven spring-type interrupter used in 806F type ringing power plants. The single-phase synchronous capacitor-type motor operates at a speed of 1800 rpm and is equipped with an enclosed gear train. Depending on the gear train used, a six or eight second ringing cycle is obtained.

TCI Library: www.telephonecollectors.info

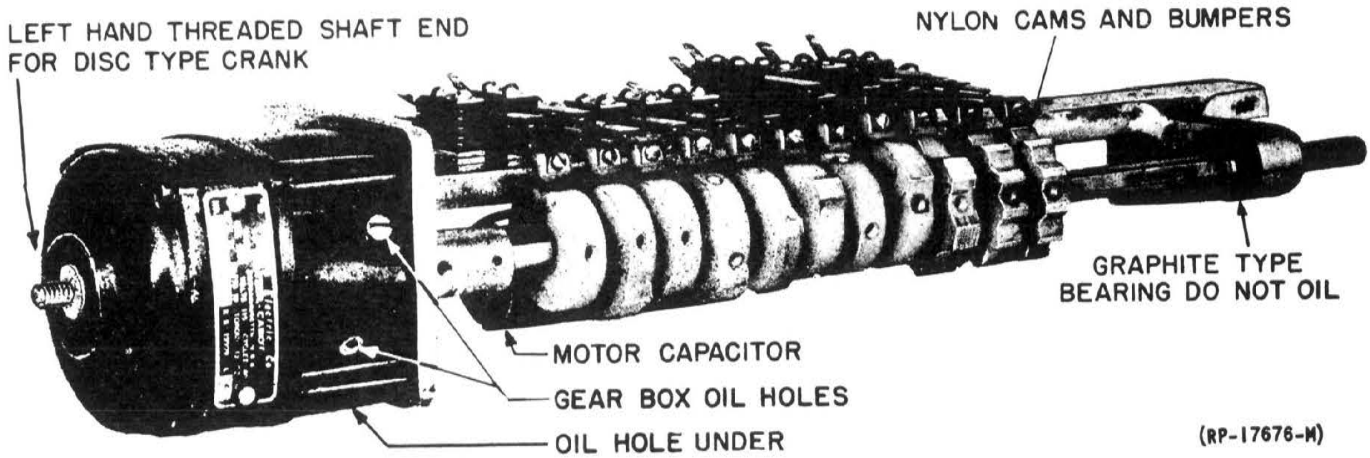

Figure 18-12 AC Motor Driven Low-Speed Interrupter

The rotary mercury type interrupter, used on the larger 803C Ringing Power Plant, consists of one or more interrupter units mounted on the low-speed shafts of a reduction gear driven by a ringing machine. The rotary mercury-type interrupter units, consist of either two or three steel discs separated by insulators placed between the discs and the whole clamped tightly together. Annular grooves or channels are cut into one side of the discs. The units are so assembled that the channel of one disc is adjacent to the channel of the next disc with the insulator separating them. The insulators have one or more openings or ports connecting adjacent channels. The grooves are partially filled with mercury. When the units are rotated, contact is made from one disc to the other by the mercury when a port of the insulator dips into the mercury pool. The port openings are provided with Lavite washers to withstand the arcing during operation. On interrupter units having 3 discs, channels are cut on both sides of the center disc. The number of ports and their spacing around the insulator, the amount of mercury in the channels, and the speed of rotation determine the timing of each interrupter unit. The rims of the discs, against which the brushes bear, present a continuous surface and, therefore, longer wear with less maintenance is obtained.

TCI Library: www.telephonecollectors.info

Ringing machines with tone alternators and cam-driven spring-type interrupters are used on the 804C Ringing Power Plant, In this plant, high and low tones are furnished by a tone alternator which is part of the ringing machine. One channel of high tone and two channels of low tone (one for steady tone and one for interrupted tone) are furnished. Each channel is tapped so that all tone voltages, with the exception of step-by-step dial tone (10V), may be obtained direct from the tone alternator without the necessity of additional coils. Machine and code ringing and various other interruptions are obtained from the new type nylon cam-driven interrupters which can be maintained to a greater degree of accuracy than has been previously possible with the spring-type interrupters.

D. RINGING GENERATORS

The three principal methods of generating ringing current are by pole changers, static ringing generators and motor generators. Space does not permit describing all the types of ringing generators in common use but several representative type are outlined to illustrate the scope of applications.

1. Static Ringing Generator

Static ringing generators are frequency converters and are used to convert 60-cycle commercial power to 20-cycle ringing power. Similar generators are used to convert 50-cycles to 16-2/3 cycles. They have no moving parts, except a starting relay armature which is found in some generators. This armature is in motion only at the time of starting. When a starting relay is not required, a modulating transformer is provided to start the 20-cycle oscillations.

When a 60-cycle supply is applied, the starting relay operates, opens its back contact and sets up a condition favorable for the 20-cycle oscillations. If the 20-cycle frequency is sustained, the starting relay will be held operated. If the 20-cycle frequency is not sustained, the starting relay will release and a second start will be made. In general, not more than two or three successive starts of the starting relay are required. On those generators where the input is a 50-cycle source, the same operation will give a 16-2/3-cycle output.

TCI Library: www.telephonecollectors.info

Sixty cycle ac is applied to the oscillating circuit, consisting of part of the output transformer, the 8 MF condenser, winding of the starting relay, and the tone coil. The circuit, with the saturated coil shorted by the starting relay back contact, has a relatively low impedance to 60-cycle current which however, operates the starting relay, placing the saturated coil in the circuit and setting up a condition favorable for 20-cycle oscillations. If the 20-cycle frequency, for which the circuit is favorably tuned, is sustained, the current at this frequency will be great enough to hold the starting relay operated. If the 20-cycle current is not sustained with the intial operation of the relay, it releases and reoperates until the 20-cycle frequency is sustained. The frequency of the 60-cycle primary supply, being equal to the third harmonic, serves to keep the train of the 20-cycle wave and its harmonics, in operation. The 20-cycle ringing output is taken from the secondary of the output transformer. With a tone coil and its condenser, proper harmonics are made to serve the useful purpose of furnishing audible ringing tone.

The static ringing generators will deliver an output up to approximately 1/2 ampere of 20-cycle ringing current continuously at 75-110 volts and will withstand temporary overloads of 100 percent. In offices where superimposed battery is connected in series with the ringing supply, a separate autotransformer is used and connected to the output transformer terminals.

2. Motor Driven Howler Interrupter

This apparatus consists of a single-phase, split-phase motor with a tone commutator mounted on the motor shaft extension. The commutator has one solid collector ring and one segmented ring with 16 live segments, each connected to the collector ring, to obtain 480 interruptions per second at a speed of 1800 rpm. The collector ring has one common brush to feed current into the interrupter, and the segmented ring has three brushes furnishing three interrupted circuits.

TCI Library: www.telephonecollectors.info

3. Small Motor Driven Ringing Machines

In some smaller central offices which require a continuous ringing current supply, dc motor driven ringing generators are used either as the reserve source or for both the regular and the reserve sources. They may be arranged to operate continuously or to operate under control of the telephone switching equipment. They are of the inverted rotary converter type and are used in small offices and large P.B.X.'s. Two of these machines are usually mounted on a power board panel and covered with a common sheet steel cover with circuit provisions for automatically switching from the regular machine to the reserve machine in case of failure. A dc motor driven ringing generator may be used as a reserve for the static ringing generator during a commercial power failure. However, the more recently developed plants use static ringing generators, frequency generators and ac motor driven cam and spring interrupters on a regular and reserve unit basis. In these plants, a rotary inverter is provided to furnish ac during power service failures. If the ac line voltage falls below 85 percent of normal, the plant transfers automatically to the inverter. About 15 seconds later the plant transfers back if the line has recovered to at least 90 percent of normal voltage; if not, it remains on the reserve until the line voltage does recover.

4. Tone and Interrupter Features

In central offices, the ringing machines are usually equipped for producing tones and low speed interruptions. In the large plants the ringing machines also produce coin control current. See Figure 18-13.

One quarter ampere ringing plants, developed for use in community dial offices use static machines for 20-cycle ringing and all tones. The interrupters are ac motor driven and are operated by nylon cams assuring maximum reliability and precise timing intervals. Automatic transfer to the reverse machine is included and in the event of a power failure a battery driven inverter supplies ac to operate the plant.

TCI Library: www.telephonecollectors.info

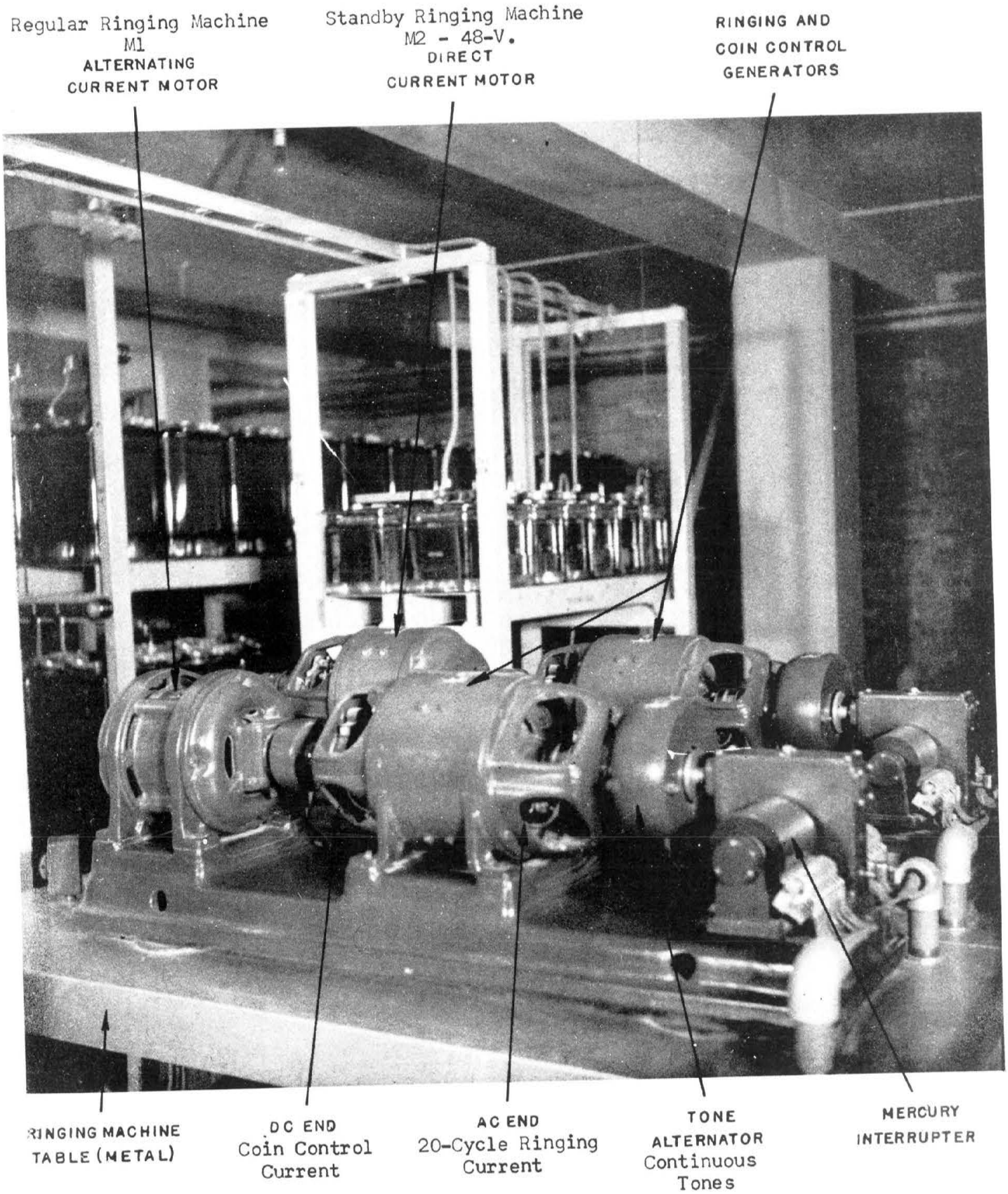

Figure 18-13 Commercial Type Ringing Machines

TCI Library: www.telephonecollectors.info

A larger ampere ringing plant, developed for use in No. 1 and No. 5 Crossbar, No. 1 and 350 SXS fills the gap between the 1/2 ampere plants used mainly in community dial offices and the large 2-6 ampere ringing machine. It employs a 1 ampere ringing machine which incorporates integrally mounted tone alternators for high quality dial and busy tones and adjustable type interrupters capable of a high degree of accuracy of interrupter timing intervals. There is an ac line driven ringing generator for normal supply with automatic transfer to a dc driven generator under conditions of ac service failure, dial tone failure, high or low 20-cycle ringing voltage. An electronic type voltage regulator on the ac machine and a contact type speed regulator on the dc set maintains the standard 18-1/2 to 20-cycle and 84 to 88 ringing voltage.

The ringing machines are mounted in the ringing bays on pull out sliding shelves for easy maintenance, and the complete plant is contained in two box-type framework bays having a total width of 49-1/8", a depth of 36" and a height of 8'.

The interrupters are driven from nylon cams which are machined to close tolerances and the interrupter springs are equipped with adjusting screws; thus the ringing intervals can be maintained to a greater degree of accuracy than has been previously possible with spring-type interrupters. Each machine is equipped with an enclosed tone alternator on one end. Two channels of low tone, one for steady dial tone and one for interrupted busy tones are provided, and one channel of high tone.

The 1 ampere ringing generators used in this plant do not furnish coin control battery and, therefore, a separate unit consisting of two 120 volt, 0.8 ampere rectifiers and two strings of 6 dry cells, one for positive and one for negative coin control, are furnished. The coin potential is normally obtained from the rectifiers, but in the case of power or rectifier failure, the load is automatically transferred to the batteries. Additional units of this plant may be provided as the need arises to supply ringing loads above 1 ampere.

TCI Library: www.telephonecollectors.info

Another large ringing plant, is furnished in the 2, 4 or 6 ampere size. The ac line driven machine normally carries the load and the reserve dc machine operates from the office 24 or 48 volt central office battery. Automatic transfer to the battery driven machine takes place when the ac commercial power fails or drops below a specified value.

The battery driven motor speed is controlled by a speed regulator mounted on the commutator end of the motor and serves to keep the motor speed within limits. A tone generator is mounted between the generator and the low-speed interrupter reduction gear which drives the rotary mercury-type interrupters. The generator furnishes ac ringing current and positive and negative direct current at approximately 120 volts for coin control. This direct current is also used to excite the field coils of the generator and for this purpose is connected through a generator field rheostat and an ac motor driven centrifugal voltage regulator for controlling the ringing current voltage.

In order to provide the various ringing voltages necessary for the continuous supply to PBX's as well as for the AC-DC or superimposed machine ringing service, an output transformer having several output voltage taps is supplied with each machine.

The foregoing descriptions did not outline certain features, frequently incorporated in ringing power plants, which are described broadly in the following paragraphs.

The division of the ringing load in machine ringing offices is accomplished by means of the slow-speed interrupters. Since the ringing interval is usually only one half as long as the silent interval (2 seconds and 4 seconds), it is possible to utilize three slow-speed interrupter units to an arrangement whereby one-third of the office is supplied ringing current during a two-second ringing period, another third of the office during the next two-seconds and a third during the following two-seconds. Thus the ringing generator can carry three times the load it could handle if the whole office were supplied during the same two-second ringing period.

TCI Library: www.telephonecollectors.info

Automatic Switching from the regular to reserve ringing supply is employed in most of the larger plants. While the detailed circuit arrangement may differ with various sizes and types of plants this feature provides for starting the reserve battery driven machine when the voltage of the regular ac driven machine falls below predetermined value, caused by a primary power supply failure or other trouble. The ringing supply, tone and interrupted signal circuits are transferred from the regular machine to the reserve machine by means of a multipole electrically operated transfer switch. When ringing current of the proper voltage from the regular machine becomes available, the supply circuits are automatically transferred back to it and the reserve machine stopped.

The charging of the ringing batteries is treated as a function of the ringing power plant. It was previously mentioned that batteries are employed in connection with silent interval tripping, ringing interval tripping and for superimposed ringing. In certain systems the central office battery is used for some of these functions and separate storage batteries for others. Where separate storage batteries are used as part of the ringing facilities the ringing power plant is provided with suitable types of rectifiers and auxiliary equipment to maintain these batteries in a properly charged condition.

E. NO. 1 ESS RINGING AND TONE PLANT

The use and design of solid state devices in power supply and ringing and tone plants for No. 1 ESS led to a new idea in precision dial tones and call progress tones.

In its use of precision tones, No. 1 ESS is unique among telephone central offices. An office requires four fundamental tones - a dial tone for TOUCH-TONE Calling, audible ringing tone, high tone, and low tone. High tone is a single frequency, the others are mixtures of two separate frequencies. The four component frequencies from which the mixtures are selected (see Table 18-2) are generated as pure sinusoidal signals in transistor oscillators and are

TCI Library: www.telephonecollectors.info

added together and amplified by transistor feedback amplifiers. (Figure 18-14 shows the waveforms generated by the amplifiers.) Each oscillator contains tuned reed selectors that select the basic frequencies within 0.5 percent. The actual output of the oscillators, a square wave, is converted by bandpass filters to a sine wave with a harmonic level 60 db down from the basic frequencies.

Audible ringing tone also is generated as a combination of two precision tones. In conventional central offices, audible tone is superimposed on inaudible 20-cycle ringing power and it is interrupted and distributed from the ringing plant. In these offices the two tones often are generated simultaneously. In No. 1 ESS, 20-cycle ringing is generated in one set of generators, and audible ringing is generated and interrupted in a separate set. Audible ringing tone is distributed within the office and applied to loop and trunk circuits through balanced 900-ohm office wiring in the same manner as all other tones.

Continuous outputs from the generators and all outputs from the interrupters are fed to a transfer and control circuit which then directs the various tones to appropriate distribution circuits. Both continuous and interrupted ringing signals for ac-dc, and superimposed ringing are fed to these panels. All signaling interruptions -- 30, 60, and 120 interruptions per minute - are sent to the network via an applique circuit. All tones are routed from output transformers through splitting resistors to furnish a balanced output.

No. 1 ESS is the only system in operation with signaling plants designed on the philosophy of precision tones. The plants used in No. 1 ESS are not compatible with other systems. However, their expected performance makes it safe to consider ESS as a pioneer in a technique that will be adapted to other large switching systems. There are four primary advantages. First, in present switching systems, signaling techniques require rather wideband receivers at the distant termination of loops and trunks. No. 1 ESS signaling is received within a much narrower range than is possible in conventional systems. Second, low loss which is a vital factor in interoffice trunking gives rise to stringent return loss requirements. The No. 1 ESS signaling system easily meets them. Third, the precise nature of No. 1 ESS tones result in even less noise and crosstalk than occurs in conventional systems. Finally, the controlled harmonic content of the signals permits machine recognition of tones, a capability that may lead to new features.

TCI Library: www.telephonecollectors.info

TABLE 18-2

THE FOUR COMPONENT FREQUENCIES

Tones	Frequencies (CPS)
TOUCH-TONE Calling	350 + 440
Audible Ringing	440 + 480
High Tone	480
Low Tone	480 + 620
Line Busy Tone	Low Tone at 60 ipm
Paths ("fast") Busy Tone	Low Tone at 120 ipm

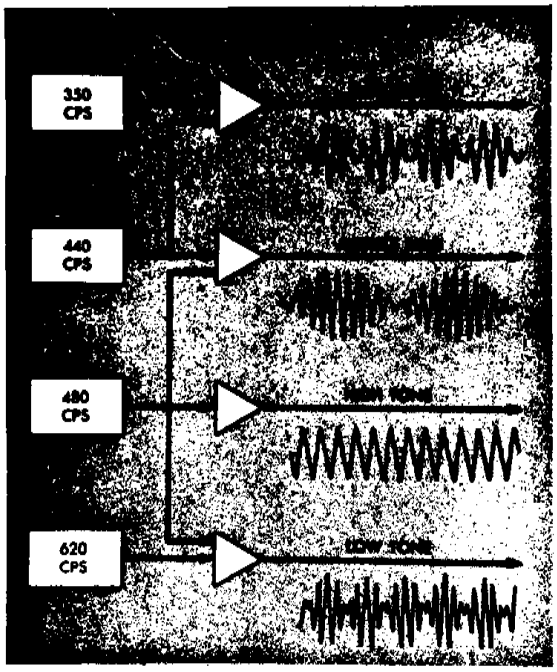

Figure 18-14 The four basic frequency components of No. 1 ESS ringing and tone signals and the waveforms generated by the transistor amplifiers when the basic frequencies are mixed to form the tones.

TCI Library: www.telephonecollectors.info

Two sizes of ringing and tone plants have been designed to accommodate small or large offices. A third, intermediate, rated at 1.5 amperes, size is underway for the future. At present, the 806H Plant, which has a ringing capacity of 1/2 ampere, is used for smaller offices. For large offices, there is the 808A Plant which has 6-ampere transistor generators. These large generators were recently designed to operate from -48 volt battery supply so that they will not be affected by any possible ac power failure. The tone generators are designed to supply the largest office and are the same in all offices.

Except for the small rotary interrupter, the ringing and tone plants are entirely solid state. In fact, to handle the larger currents that must be interrupted in large offices, solid state devices are used as interrupter followers in the ringing part of 808A Plant. Fully solid state interrupters are planned for use in future No. 1 ESS offices. A feature of these interrupters is all-transistor timing circuits that are synchronized with the 20 cps signal. All the interrupting switches also will be solid state devices.

18.6 BATTERY AND CEMF CELLS

There are three general types of battery cells used in telephone plants. They are storage batteries, C.E.M.F. cells and dry cells. The most important of these is the storage battery or accumulator in which chemical changes are brought about by passing direct current through them, called charging, thereby rendering them capable of delivering electrical energy, called discharging. The plates of some storage battery cells contain lead-calcium and others lead-antimony. Nickel-cadmium (nicad) batteries are being used for engine starting batteries in reserve power plants with excellent results. However, the voltage per cell is less than lead-type cells so that more nicad cells are required for any required voltage.

Associated with the storage battery in certain instances are counterelectromotive force (CEMF) cells. They do not accumulate nor store energy but develop potential or voltage when current is passed through them. Therefore, they are not charged and discharged as are storage batteries but are connected in series with them in units of one or more. They are used for regulating the voltage supplied to the telephone plant by the storage batteries in combination with the charging equipment.

TCI Library: www.telephonecollectors.info

In some instances, small amperages at voltages different from those required for the operation of the bulk of the circuits and apparatus in a telephone plant, are obtained from primary dry cell batteries.

A. STORAGE BATTERIES

Storage batteries are of great importance in telephone plants. They act as reservoirs of electricity and are, therefore, capable of supplying energy for limited periods, irrespective of interruptions in commercial power service. They are of low impedance and absorb much of the electrical noise which charging machines generate because of undulations in the voltage of their output.

A storage cell can be made by immersing lead plates in diluted sulphuric acid and passing direct current through the combination thus electrically "forming" the plates. This is an expensive method of accomplishing the results, and the storage capacity of a battery so made would be relatively small. Commercially, it is more economical to form the plates chemically.

In a commercial lead-acid storage battery, the plates consist essentially of lead with which a small amount of antimony or calcium is alloyed to increase its mechanical strength and stiffness. The plates are cast into grids to become containers for lead compounds known as active materials. There are many different designs of storage battery grids. However, the result obtained by all of them is essentially the same.

A storage battery cell is an electrolyte cell for supplying electric energy. It consists of several positive and negative plates with separators in between in a suitable container filled with an electrolyte which is dilute sulphuric acid. All positive plates of a cell are connected together and all negative plates are connected together and terminated at suitable positive and negative terminals used to connect the cell into the circuit. The number of plates in a cell will always be odd since an extra negative plate is required in each cell so that each positive plate may have a negative plate on each side, thus contributing toward the even working of the end positive plates and preventing them from buckling.

TCI Library: www.telephonecollectors.info

During charge a chemical action takes place within the cell between the plates and electrolyte whereby the lead sulphate on the positive plates is changed to lead peroxide and on the negative plates it is changed to sponge lead.

During discharge, a similar but opposite chemical action takes place whereby lead sulphate is formed on both sets of plates. This form of lead sulphate is in a finely divided state, and is essential to the operation of the cell. The loss of sulphuric acid from the electrolyte in the formation of the lead sulphate causes the lowering of the specific gravity during discharge while the chemical reaction producing water further dilutes the electrolyte. The relative density of electrolyte is an indication of the state of charge of a cell which may, therefore, be determined with a hydrometer.

The voltage of a storage cell varies between 1.75 volts when discharged, to approximately 2.50 volts at full charge. The normal voltage, under correct operating conditions, may be computed at approximately 2.17 volts. Therefore, the number of cells to be connected in series to obtain a desired circuit voltage requirement is in general obtained by dividing the desired voltage by 2.17.

The capacity of a storage cell is determined by the surface area of the positive plates of the cell, that is, the ampere capacity of the cell increases in direct proportion to the increase in the area of these plates. Rated capacity, or amper-hour capacity, is the number of ampere-hours which can be delivered under specific conditions as to rate of discharge, final voltage and temperature. For example, the rated capacity in ampere-hours of batteries classified under the 8 hour rate is 8 times the 8 hour discharge rate in amperes at a temperature of 77 degrees Fahrenheit when discharged to 1.75 volts per cell. If the discharge rate is 12.5 amperes, the rating is 8 hours x 12.5 amperes or 100 ampere-hours.

Sediment accumulates in the normal use of a cell which is regularly discharged and charged. The active material, mostly from the positive plates, is gradually worked loose from the plates and settles to the bottom of the cell in the form of sediment. Unnecessary overcharging, resulting in excessive gassing accelerates the wear on the plates and consequently the accumulation of sediment. If sediment piles up either on the bottom of the container or on the plate supports, so that it comes into

TCI Library: www.telephonecollectors.info

contact with the bottom of the plates, it will produce a partial short-circuit which will shunt part of the current during charging and will also cause the affected cell to discharge continuously when not being charged. With present operating methods, particularly continuous float, there is very little sediment deposited.

Sulphation in a storage cell is due to the lead sulphate on the positive plates reaching an abnormal condition where it tends to fill the pores of the plates and make the active material hard and dense. During the normal discharge of a cell, lead sulphate is being formed on the plates. If a cell is permitted to stand completely discharged, is habitually undercharged, or is otherwise neglected, the sulphate reaches the condition called sulphation. This form of sulphate makes the portions of the plates on which it is deposited inactive, thus reducing the capacity to that which is given by the remaining good material. The harmful sulphate formed in this manner when not in too large masses, can usually be converted into lead peroxide and lead in the same manner as the finely divided useful substance by considerable extra charging.

1. Pilot Cells

   To sample the condition of each battery a pilot cell is selected. Readings are taken to note the temperature, specific gravity and voltage of the pilot cell. These readings indicate the general condition of the battery.

2. Battery Plates

   A positive plate consists of a grid and positive active material. A charged positive plate is usually dark brown in color. The terminal to which positive plates are attached is usually designated (+) or (POS) or is referred to as the plus material.

   A negative plate consists of a grid and negative active material. A charged negative plate is light gray in color. The terminal to which negative plates are attached is usually designated (-) or (NEG) or is referred to as the minus terminal.

TCI Library: www.telephonecollectors.info

3. Separators

It is essential that the positive and negative plates of any cell should be mechanically separated from each other in a way to prevent metallic contact or short circuit. The material used is porous and allows circulation of the electrolyte and low resistance to current flow.

Wood or microporous hard rubber separators and fine spun glass-fiber mats or perforated hard rubber retainers in various combinations are used to separate the plates. See Figure 18-15.

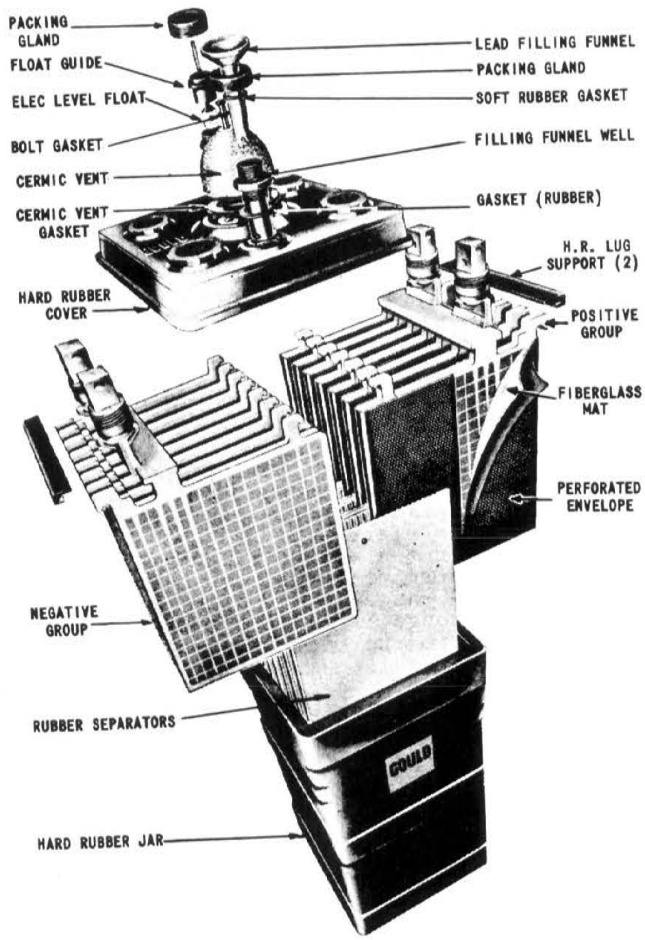

Figure 18-15 Cell Assembly

TCI Library: www.telephonecollectors.info

The separators deteriorate with age, becoming mechanically weak or brittle or both, so that if work is done on an aged cell, it is likely that the separators will be damaged. However, if the cell is not disturbed, the separators are likely to provide the required separation and last as long as the plates.

4. Electrolyte

The electrolyte is the solution in which the plates of a storage cell are immersed and which in combination with the active material of the plates, determines the electromotive force or voltage of the cell. This solution consists of purified sulphuric acid and approved water.

The specific gravity of the solution at any time is dependent upon the type of cell, the electrolyte temperature and the amount of charge in it. Since specific gravity varies with changes in temperature, readings must be corrected to an established base temperature of 70 or 77 degrees Fahrenheit for reference purposes.

Specific gravity is the ratio between the density of the electrolyte and the density of water. The specific gravity of the electrolyte becomes lower as the battery is discharged and rises as the battery is charged.

Water, which is lost from the electrolyte through evaporation or other reasons, must be replaced to keep the proportion of water to acid constant. If this were not done, the hydrometer readings would reflect the variation of the electrolyte density due to water loss and could not be relied upon as an accurate indication of the condition of charge.

Gravity range is the difference in specific gravity of the electrolyte of a fully charged cell and of the same cell discharged to the point where, for practical purposes, it is considered fully discharged. The amount of this difference depends upon the quantity of electrolyte in the cell as compared with the quantity of available active material in the plates. If

TCI Library: www.telephonecollectors.info

the plates are badly sulphated, or a portion of the active material has been dissipated so that the full capacity is not available, the range in specific gravity to complete discharge is reduced in proportion to the reduction in capacity. The range also varies with the rate of discharge. Ampere-hour capacity and, therefore the gravity range, increases as the discharge rate is decreased, because more time is available for diffusion of the electrolyte in the pores of the plates, and a large part of the total active material is able to take part in the chemical action.

The nominal specific gravity of a cell is an assumed value which the cell will approximate when new, fully charged, with the electrolyte near the maximum level and temperature at 77°F. Most batteries now used in telephone power plants have a nominal specific gravity of 1.210 (1.201 to 1.225).

5. Charge and Discharge Rates

The nominal charging rate is a current value recommended by the manufacturer as a current which can be absorbed by the cell throughout the charge without overheating or harmful gassing. There is no harmful effect in charging at a rate less than the nominal. Usually, a reduced rate is more economical and tends toward greater battery life. To conserve time, a high starting rate with a low finishing rate is sometimes specified.

Because the large surface of active material and the low internal resistance, a battery can usually be discharged at any rate without injury. In general, the greatest output in ampere-hours and watt-hours is obtained when the battery is discharged over several days, since the diffusion of acid, through the active material, is more complete and a greater percentage of the active material is available to sustain the charge. Telephone batteries are usually rated to discharge to 1.75 volts per cell in eight hours.

TCI Library: www.telephonecollectors.info

6. Types of Storage Cells

There are two general types of enclosed storage battery cells used in the power plant: rack mounted and floor mounted. The rack mounted cells are furnished in plastic or hard rubber containers. The floor mounted cells are furnished in hard rubber containers.

B. COUNTERCELLS (C.E.M.F.)

After batteries have been partially discharged, it is necessary to charge them promptly for further use. During the charging, however, the voltage across the battery must be somewhat higher than when floating. To prevent this higher voltage from reaching the central office discharge circuits, it is necessary to employ counterelectromotive force (CEMF) cells, between the battery and the load, to reduce the potential to the desired value.

Alkaline type counter-emf cells normally function to oppose, and thereby cause a voltage drop in the main discharge battery supply; the voltage being lowered by an amount depending on the number of cells in the circuit. This drop occurs as current is passed through the cells when they are connected in series with the battery discharge supply.

The advantage of counter-emf cells, as compared to a series resistance, which may be used, is that the voltage drop through the countercells does not depend entirely on the amperage flowing through the circuit. Whereas, the voltage drop due to a series resistance (IR drop) is directly proportional to the current flow. However, the counter-emf developed is dependent to some extent on the amount of current passing through it. But, the range of the countervoltage is fairly narrow, varying from 1.85 volts per cell, at 10% rated load, to approximately 2.15 volts per cell at full load when the alkaline solution is new, at the correct level and at a temperature of 100°F. The values change with age and temperature.

Primarily, counter-emf cells are introduced in the discharge circuit, when the battery is being charged to hold the office voltage within the upper allowable voltage limits at the distribution point, and provide a reduced constant voltage supply. Briefly, their function is that of voltage regulation and, therefore, may operate in the circuit continuously or intermittently.

TCI Library: www.telephonecollectors.info

Semiconductor type selenium countercells are also used to supply a countervoltage in some power plants. Their use permits additional cells to be connected in the plant battery in order to obtain suitable reserve power when the battery voltage is lowered due to a power failure. Provisions are made to switch out the countercells, thereby raising the voltage as required.

Semiconductor type countercells consist of various combinations of series and parallel selenium cells arranged to produce a 2.0 volt drop in battery charging circuits. They eliminate the hazards and maintenance problems associated with the alkaline cells and can be used to replace them. The cells are made of selenium covered metal plates, specially treated so their internal resistance decreases rapidly as the current flow through them increases. The voltage drop across these cells changes very little for substantial changes in the current flow. Because of this, the cells are very effective as voltage regulators.

C. ENGINE STARTING BATTERIES

Batteries of the lead-sulphuric acid type, and the nickel-cadmium alkaline type, are designed for engine starting where the normal routine is three starts per week, with voltages maintained between starts at 2.17 volts per cell for the lead acid type and 1.45 volts per cell for the nickel-cadmium type. All batteries are shipped filled with electrolyte and charged. They are composed of a number of cells in trays (nickel-cadmium) or cases (lead-acid) depending on the voltage required to start the engine.

Nickel-cadmium batteries have been used in telephone plants for some time with excellent results and minimum maintenance. At potentials up to 1.47 volts per cell, the gassing is negligible. The gas given off is the same as that given off by lead-acid cells, namely, a mixture of hydrogen and oxygen. Since this is explosive, the same antiexplosion precautions apply to these cells as to lead-acid cells. Bell System operating routines call for no operation at voltages above 1.45. For this reason, explosions are less likely than on lead-acid cells, and antiexplosion design features have not been provided for these cells.

TCI Library: www.telephonecollectors.info

The alkaline electrolyte is corrosive and attacks most animal and vegetable products including clothing, the skin, and paint, as well as some metals including aluminum and zinc but excluding iron, steel, and nickel. It attacks glass very slowly (Pyrex-type glass almost negligibly), so exposure of glass other than the Pyrex type or of porcelain should be for as short duration as practicable. Glass or porcelain objects should be washed in water after exposure to electrolyte.

D. DRY CELLS

A dry cell is a primary cell. It produces electrical energy through an electrochemical reaction which is not efficiently reversible except in the earlier stages of discharge. Hence, the cell, when fully discharged, cannot be economically recharged. The electrolyte is completely enclosed in the absorbent materials within the cell.

A dry battery is a combination of two or more dry cells electrically connected together to produce electrical energy.

Ordinarily, the cell is enclosed in a zinc can. This serves as the negative electrode and is usually lined with a layer of paste and absorbent paper. The positive electrode consists of a central carbon rod surrounded by a layer of material known as the depolarizer or "mix." The "mix" consists of a mixture of ground carbon or graphite and manganese dioxide. Both the "mix" and the lining are moistened with electrolyte consisting of a water solution of ammonium chloride (sal ammoniac) and zinc chloride.

The open end of the zinc can is closed by a layer of insulating compound, or by an insulated metal top, to hold the materials in place and to prevent evaporation of the moisture in the cell.

When the external circuit, between the terminals of the cell, is closed, chemical changes within the cell produce electrical energy. These changes result in the liberation of hydrogen, which tends to collect at the carbon electrode if not absorbed by the manganese dioxide in the "mix." With use, the various constituents of the cell either become exhausted or coated with the products of chemical reactions, thereby increasing the internal resistance and lowering the operating voltage of the cell.

TCI Library: www.telephonecollectors.info

Local internal action is responsible for the consumption of some of the chemical energy in the cell. This loss of energy, which occurs both while on open circuit (either in storage or assembled in equipment) and while on closed circuit, is known as shelf depreciation.

The life of a cell depends upon its size, ingredients, processes of manufacture, age, and also on the frequency, duration, and rate of discharges, and the circuit voltage limits.

The chemicals in the cell, including the water, gradually become exhausted due to useful current output and to shelf depreciation. When this condition is reached, no more electrical energy can be supplied. To obtain reliable service, it is economical in most telephone application to discard cells before their capacity is completely exhausted. However, if the cell has become exhausted due to a high rate or extended period of discharge, it may recover, to some extent, if allowed to stand idle, to give further service.

When batteries are exposed to abnormally high temperatures, the voltage, both open-circuit and operating, and the rate of shelf depreciation are increased. Batteries should, therefore, be kept away from abnormally high temperatures both during storage and in use.

Low temperatures decrease shelf depreciation but also reduce the open-circuit and operating voltages. Under most operating conditions, the life of a battery may be considerably decreased if its temperature is appreciably below 70°F. Except for grid service, a cell becomes inoperative when its internal temperature falls below 0°F. Batteries subjected to low temperatures incur no permanent injury and regain their normal characteristics when their internal temperatures are restored to normal. To minimize shelf depreciation, batteries should be stored at a temperature of about 34°F to 40°F.

Batteries in low-current-drain service will deliver most of the available ampere-hour output at a relatively high operating voltage, after which the voltage drop will be comparatively rapid. Hence, in this service a high cutoff point is desirable to insure reliability. For batteries in high-current-drain service, the higher current will produce a greater internal resistance drop and a lower

TCI Library: www.telephonecollectors.info

operating voltage. A lower cutoff point is, therefore, necessary to obtain efficient use of the available energy contained in the cells. When it is necessary to maintain the battery voltage within close limits under high current drains, it is frequently desirable to add one or more cells in series when the cutoff point is first reached, in order to take advantage of the increased output thereby obtainable from the whole battery.

Dry cell batteries are used in the telephone office for a variety of purposes. In the power plant their most common use is for tripping battery reserve, where a rectifier normally furnishes the supply, and for message register battery supply either as a reserve for use where a rectifier is furnished or as the main source of message register battery supply.

18.7 EMERGENCY AC SUPPLIES

A. ENGINE ALTERNATORS

It is essential in the design of a telephone power plant, that provisions be made to assure an uninterrupted supply of primary power within practical limitations. For this purpose, engine alternators are usually installed to furnish reserve power during emergencies. In some installations, engine sets are the sole source of primary power; this is usually due to lack of commercial power facilities. At some locations, mobile diesel engine sets are used. The engine sets are plugged into permanently installed building connections for emergency use.

Two types of engine sets have been standardized for use in the telephone central office: gasoline driven and diesel driven. Only the 5 KW unit of the gasoline type is presently being furnished. Diesel engine sets range from 10 KW to 500 KW in standard sizes and up to about 1000 KW in the nonstandard sizes. All engine sets may be obtained with manual or automatic controls. Alternators are available for single or polyphase power supplies.

The size and type of the engine alternator set and the controls are determined by the Telephone Company. The manually controlled sets are used in central offices where maintenance forces are always on hand to start the engine and switch the load on and off. Automatically controlled sets are used in unattended or partially attended offices. They are arranged to start automatically when commercial power service fails and to assume the load when ready, also to shut down when commercial power is restored. Figure 18-16 shows the gasoline driven engine set currently in use and Figure 18-17 shows the 100 KW diesel engine set.

TCI Library: www.telephonecollectors.info

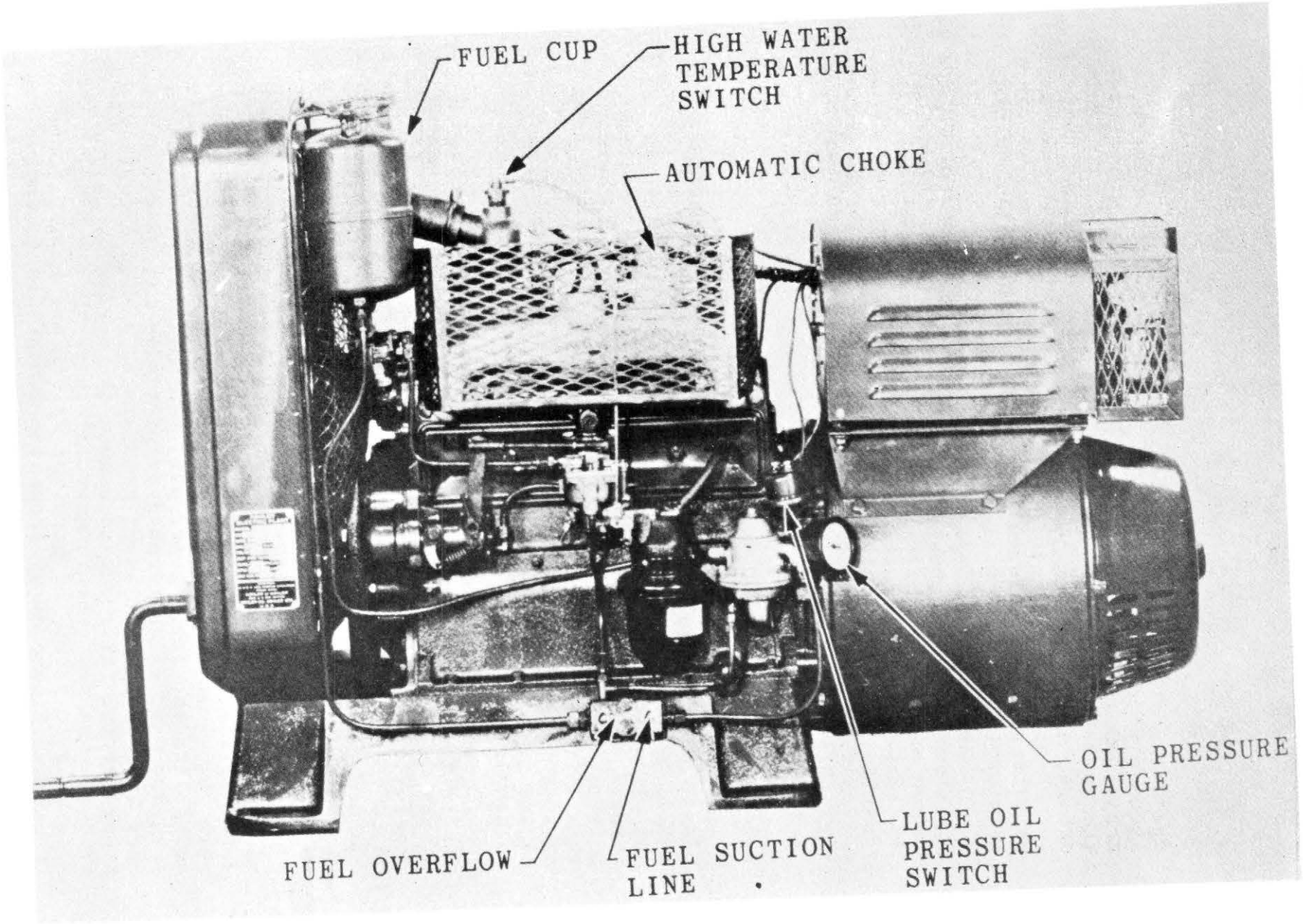

TCI Library: www.telephonecollectors.info

FIGURE 18-16 - 5KW GASOLINE TYPE ENGINE ALTERNATOR

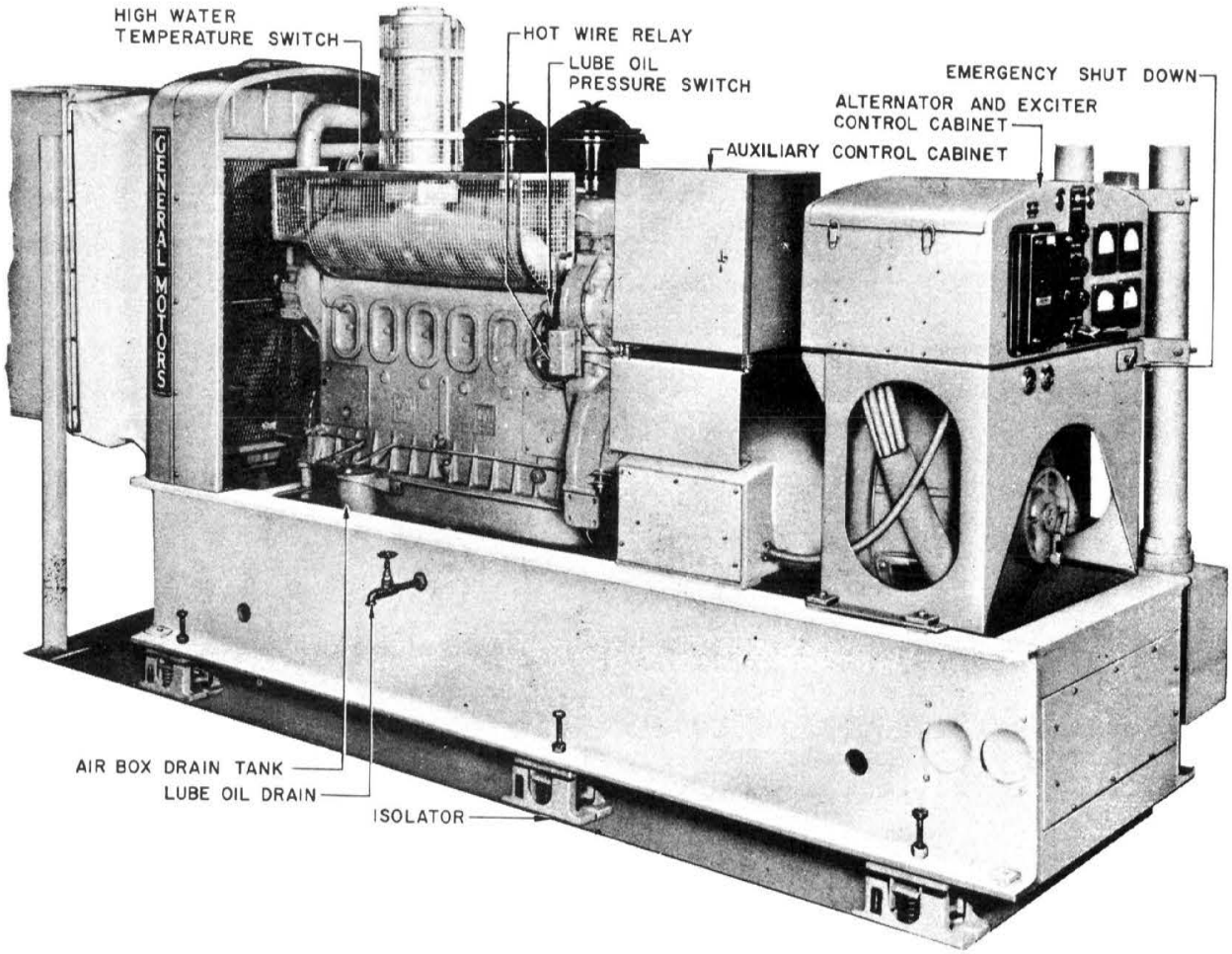

Figure 18-17 100 KW Diesel Type Engine-Alternator

TCI Library: www.telephonecollectors.info

The engine with its start controls and the alternator with its exciter are mounted on a common base. Engine and alternator are directly connected by a flexible coupling.

Engines are cooled by radiators, fans or city running water - in which case heat exchanges are provided. The gasoline engine uses four-cycle operation and the diesel engine two or four cycle operation. Operating speeds range from 900 to 1800 rpm.

Engines are started by a starting motor or by compressed air. The fuel supply is stored in buried tanks and is pumped from the tanks to the engine by a fuel pump. Exhaust equipment includes a silencer and piping to the outside of the building or to a building flue provided for this purpose.

Alternators are designed for 220 or 440 volt output at 60-cycle, 3-phase current or other values to match the local commercial power supply. The frequency is controlled by the speed of the engine which can be adjusted by a governor, mounted on the engine. Each alternator has a rotating field excited by a direct current generator called an exciter. The alternator control panel includes an automatic voltage regulator and the necessary controls to insure the desired voltage under manual or automatic operation. When more than one engine-alternator is required to carry the emergency load, they are operated in parallel.

1. Diesel Micropower Sets

This set consists of an ac motor, an alternator, a large flywheel, a diesel engine and an electrically operated clutch between the engine and flywheel. Parts are mounted on a skid-type base. A control cabinet for wall mounting is furnished. The cabinet is equipped with meters, an ac motor starter, power failure relays, an electrically operated bypass switch, control relays and switches.

Micropower sets are also known by the general term "no-break set." The unit is designed to operate unattended. The ac motor drives the alternator and flywheel from commercial power. When commercial power fails in any phase, or drops to 90% of normal line voltage, power failure relays release, in turn releasing the ac motor starter which energizes the electric clutch and the engine fuel solenoid from the alternator output. The inertia of the flywheel starts the engine by means of the clutch. The engine is brought up to speed rapidly.

TCI Library: www.telephonecollectors.info

About 15 minutes after the return of commercial power to a value of about 95% of normal or higher, the ac motor starter is energized, returning the alternator to ac motor drive, releasing the clutch and the engine fuel solenoid and shutting down the engine.

Units are being furnished in four sizes, 5, 10, 15 and 20 KW weighing, 2000, 2300, 3400 and 3800 pounds respectively.

2. Control Equipment

The controls for manually operated engine-alternator sets are generally mounted on the set. The controls for automatically operated sets are mounted in a separate control cabinet. These controls start the set, operate it at no load for a predetermined time and then transfer the load to the set. When the engine-alternator is no longer required, the controls shut the set off after a short time delay. All this is accomplished on an automatic, unattended basis.

Additional controls function to shut down the set when it malfunctions. At this time, connections to alarm circuits are made and the trouble indication is transmitted to an attendant for corrective action.

B. ALTERNATELY OPERATED ENGINE-ALTERNATORS

At locations where commercial power is not available, two automatically operated diesel sets are usually furnished for alternate operation. Each set operates for approximately 12 hours.

The nonrunning set is started automatically and warmed up prior to the shutdown of the running set. The load changeover is made just before the shutdown. Sets are equipped with starting motors that are supplied by a 32-volt battery which is common to both sets. The starting battery is charged by a regulated rectifier operated from the output of either set.

Complete automatic operation of the two sets is controlled by a main control cabinet which is separately floor mounted.

TCI Library: www.telephonecollectors.info

C. GAS TURBINE-POWERED ALTERNATOR

In addition to the gasoline and diesel engine alternators, there is the gas turbine-powered alternator. These types of turbines atomize liquid fuel to a gaseous form in their combustion chambers in the same way that a jet engine does. Until recently the largest size was 750 kilowatts, but as of 1967 sets of 2000 kilowatts size have been ordered for multistored telephone buildings. The gas turbines appear to be excellent replacements for the larger diesel powered engine-alternators. These alternators generate enough power to supply not only the switching equipment but also the lights, ventilation equipment, and other essential ac operated utility loads. Installation costs for a large gas turbine generator are lower than for a diesel engine alternator of comparable power. Though turbines use more diesel fuel per kilowatt hour, they are operated for only a few hours a year for test purposes and during commercial power failures. This makes installation costs rather than operating costs the deciding factor.

Figure 18-18 shows a schematic describing the principle of operation of the gas turbine

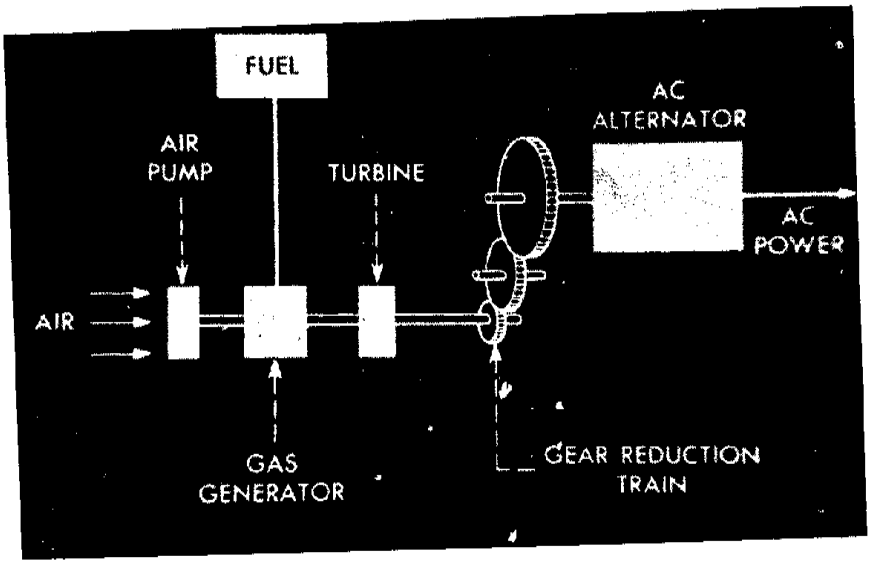

Figure 18-18 Gas Turbine Operation

TCI Library: www.telephonecollectors.info

Figure 18-19 is a photograph of a 750 kilowatt gas turbine running at rated speed of 23,300 rpm. The stainless steel foil surrounding the gas section acts as a heat shield.

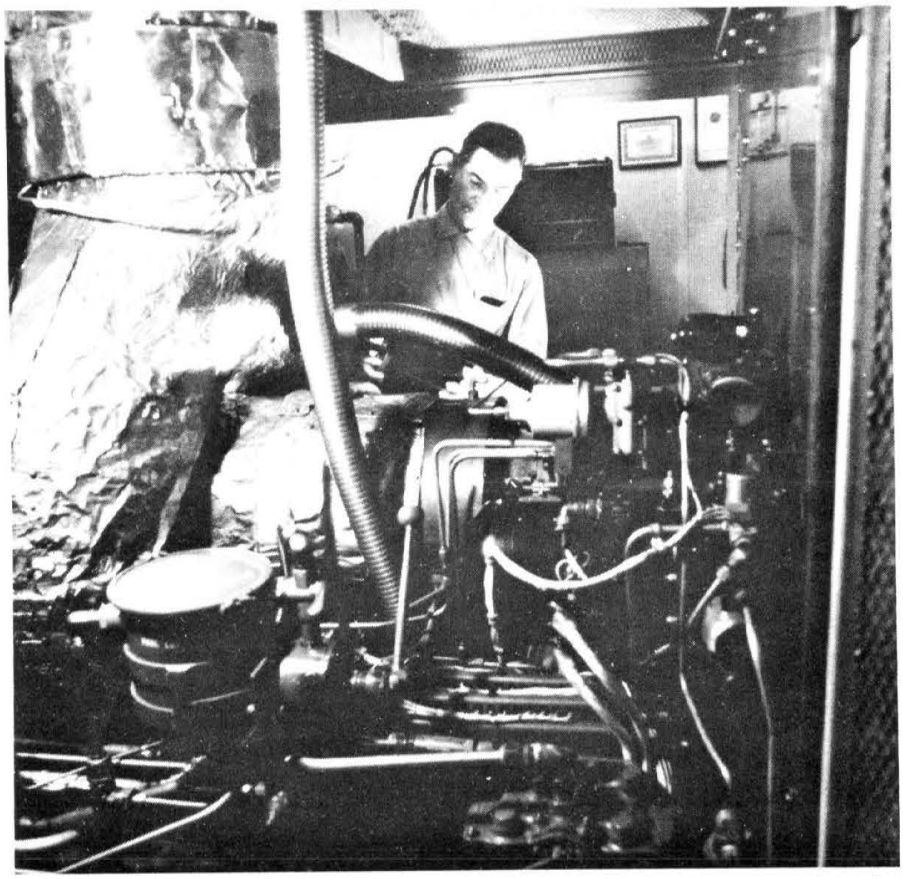

Figure 18-19 750 KW Gas Turbine Alternator

18.8 POWER SUPPLIES

A. L CARRIER

Continuous 230 volt, 60-cycle alternating current power is supplied to L carrier equipment from motor alternator sets. They consist of single-phase, self-excited alternators operated normally from commercial ac service by 3-phase induction motors and during emergencies from the 130 volt central office battery by dc motors all connected on the same shaft.

TCI Library: www.telephonecollectors.info

Three capacities of alternator sets are presently available, namely, 10, 16 and 21-KVA. The 10-KVA set is usually used in stations sending power in one direction for each pair of coaxials or in both directions when the number of auxiliary stations limits the power required within its capacity. The 16-KVA set is usually specified in stations sending power in two directions where the capacity of the 10-KVA set is insufficient. The 21-KVA set has application only for long spans in both directions.

By supplying the power from the alternator instead of direct from the ac commercial service, the effect of instantaneous changes in the coaxial current due to ac commercial service fluctuations will be reduced and will insulate the coaxials from surges and transients from the ac service due to lightning, power line crosses, etc. On ac commercial power failure or low voltage, a control circuit automatically transfers the drive from the ac motor to the dc motor. The sets are especially designed to include large amounts of inertia in their rotating elements to maintain nearly constant alternator output during the motor transfer and to prevent too rapid changes in the output during motor surges.

The output from the motor alternator sets is connected to one or more power control bays which supply a substantially constant current to a power section. Means are provided for manual regulation with safeguards to remove personal hazards as well as high voltages due to improper operation.

1. Two Motor Alternators

A two motor alternator set consists of a single-phase, rotating armature-type alternator with exciter, direct-connected to either a 3-phase or a single-phase ac squirrel cage induction motor and a dc shunt motor. They are mounted on a common subbase, having resilient mountings and normally operate continuously from ac line motors which have a suitable output to drive the alternator at full load and the dc motor at no load. All sets are started from the central office 130 volt battery under manual control until up to normal speed and voltage limits. Figure 18-20 shows the two motor alternator set used on L3 carrier.

TCI Library: www.telephonecollectors.info

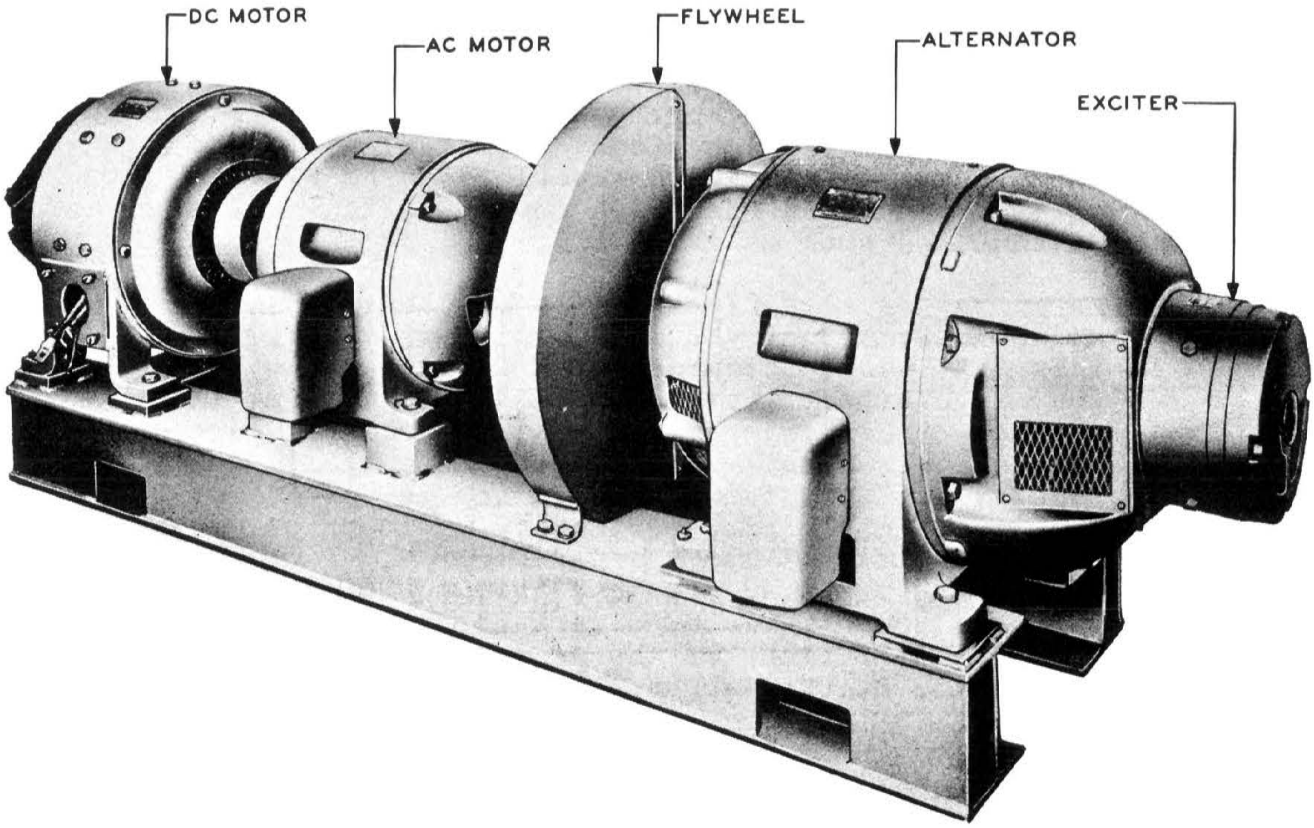

Figure 18-20 Two Motor Alternator Set

TCI Library: www.telephonecollectors.info

The output of the alternators of these sets is fed to a power control bay where the 230 volt, 60-cycle supply voltage is stepped up to the required voltage and automatically regulated to maintain a constant current to the power packs of office repeaters and over the coaxials to the power packs of auxiliary repeaters. The alternator, associated with each power section, has a designation such as ALT 2 L201-202, etc.

An emergency alternator set is run continuously at no load, normally driven by its ac motor. This set is a common emergency for a maximum of four regular sets for supplying an eight coaxial system. The emergency set is arranged through a common control unit to replace automatically any regular set that fails or goes low in voltage or that is removed from service for maintenance.

Alarms are provided for fuse failure, alternator failure, power failure, alternator high low voltage, or failure of the ac motor to hold the alternator voltage above 90 percent of normal voltage.

A motor controller panel, which contains the contactors and resistors for controlling the starting and running of the dc motor, is mounted on a start control panel directly associated with each motor alternator set.

Keys mounted on a transfer control bay provide means for starting and stopping, transferring the load to and from the emergency alternator, transferring the drive from one motor to the other, cutting off alarms, and testing automatic throwover due to power failure.

On ac power failure or low voltage, a marginal control circuit automatically transfers the drive of the set by opening the input to the ac motor and shorting a current-limiting resistance in the battery supply circuit of the dc motor to allow the dc motor to pick up the drive quickly. On resumption of commercial power, after a short delay, to allow the ac service to become stable, automatic transfer

TCI Library: www.telephonecollectors.info

returns the drive to the ac motor, reinserts the resistance between the dc motor and the battery, and shorts out a portion of the field resistance to keep the dc motor field at the proper value. During the dc motor operation, the speed of the set will be determined by the battery voltage. A fixed field resistance setting on the field resistance mounted on the dc motor controller unit is required to match the ac motor speed at the mean battery discharge voltage.

Auxiliary charging equipment is required for use in recharging the 130 volt battery of the power plant where the rectifier equipment furnished to float the light normal battery load is inadequate for the heavy emergency load imposed by the motor alternators. This control brings in an automatically controlled charging generator operated from the ac service whenever the battery stays at low voltage for a period of approximately six minutes. Once connected to the battery, this generator is controlled to charge the battery to its maximum voltage and the control functions to hold this charge for a predetermined time up to six hours, after which the battery is returned to its normal float condition.

2. Power Control Bay

The power control bay receives the 230 volt ac output from the motor alternator sets and regulates it for one power section and the associated office repeaters.

A power section is a series loop through the central conductors of two coaxials with the primary windings of the auxiliary repeater transformers in series at each repeater point. The power control circuit output voltage is applied to the input of a power section, the voltage depending on the length of the power section.

TCI Library: www.telephonecollectors.info

Power for the L3 carrier system involves supplying regulated and unregulated 230 volts to office equipment and regulated current over the coaxials to power sections of auxiliary repeaters. Step-up transformers with secondaries, tapped at suitable increments, provide power for auxiliary repeaters at 1.5 amperes at any voltage up to 4400 volts depending on the length of the power section. Protective switches are furnished on each power control bay which open the power circuit to the high voltage transformer when the covers to the high voltage panels are removed.

The particular current for each of the two lines of each power section is usually specified on a card holder mounted just above each of the two ammeters on the power control panel shown in Figure 18-21.

A resistance in series with the coaxial current circuit provides a drop for controlling motor driven variable transformers to raise and lower supply voltage to the step-up transformers as required to maintain constant coaxial current. Two types of control are furnished; a fine ± 1 percent control using an electronic regulator to control the motor which drives a fast acting small variable transformer which has a buck-boost range of 10 percent of the total, and a coarse control using relay control of a motor driving a large variable transformer. This large variable transformer, mounted in the base of the control bay, is slower acting and normally serves to hold the fine control within ± 3 percent of a center position so that the fine control will be ready at all times to correct for anticipated changes.

The course control arrangement also provides emergency regulation within ± 3 percent in the event of fine control failure and a means for manually turning power up or down on the cables as well as shut down protection in case of trouble such as an open cable.

Suitable alarms are furnished to indicate fuse failures, high or low line current if it persists more than 1/2 second, or line current failure in either of the two coaxials. Manual controls are included with each power control panel to raise or lower the line current.

TCI Library: www.telephonecollectors.info

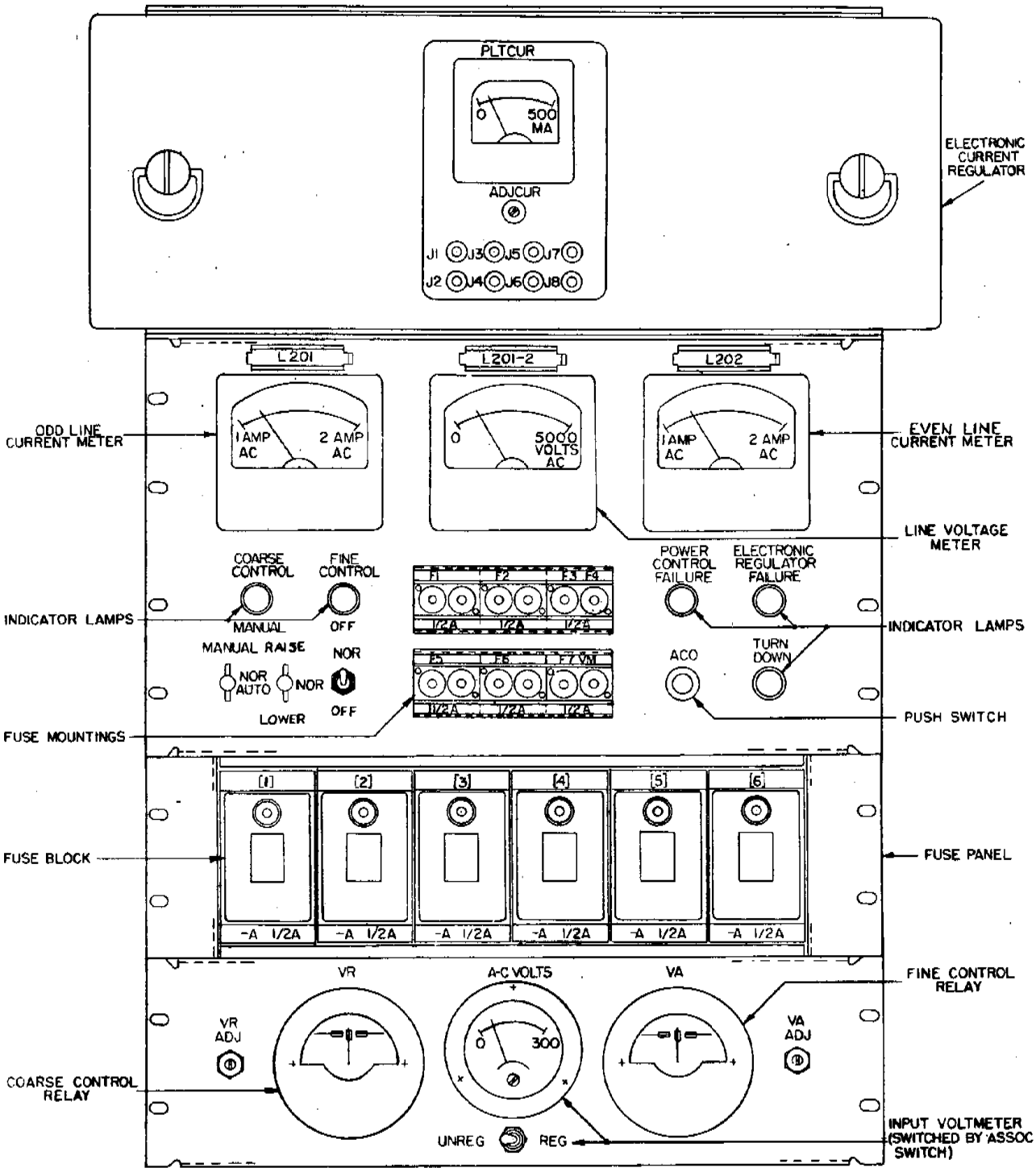

Figure 18-21 Power Control Panel

TCI Library: www.telephonecollectors.info

B. 508A POWER PLANT

Two-motor alternators used in the TH radio system, BMEWS (Ballistic Missile Early Warning System) and in some submarine cable systems, are designed to develop firm ac power from a commercial power source or its equivalent (engine-alternator) and when this fails, from a dc power supply.

The unit consists of a compound wound 130-volt dc motor, a synchronous type 208-volt, 60-cycle, 3-phase ac motor and a brushless, self-excited type, 230-volt, 60-cycle, single-phase alternator. The alternator uses a voltage regulator which senses output voltage and current to maintain a closely regulated output voltage.

The voltage regulator is mounted on the machine frame and furnishes dc power to the exciter field of the stator, which generates an ac voltage in the rotating exciter armature. The ac voltage is rectified by the 3-phase full wave silicon bridge to provide a dc rotating field for the alternator stator winding.

The dc motor is equipped with four brush lifting solenoids which hold the brushes away from the commutator when the alternator is driven by the ac motor. When the ac power fails the brushes are automatically dropped on the commutator and the drive is transferred to the dc motor. When ac power is restored, the drive is returned to the dc motor and the brushes of the dc motor are lifted from the commutator.

The complete plant consists of five regular load carrying two-motor alternators, one continually running spare set, operating at no load and one nonrunning spare set. Four control cabinets contain the necessary switching and control circuitry for the seven sets. Figure 18-22 shows the two-motor alternators mounted on machine tables and three control cabinets. Figure 18-23 shows the main control panel.

C. CONVERTERS AND INVERTERS

Semiconductor-type inverters and converters are now being used extensively for supplying power to various types of equipment. They vary in size from units that are mounted on a relay rack bay to floor supported units seven feet high.

TCI Library: www.telephonecollectors.info

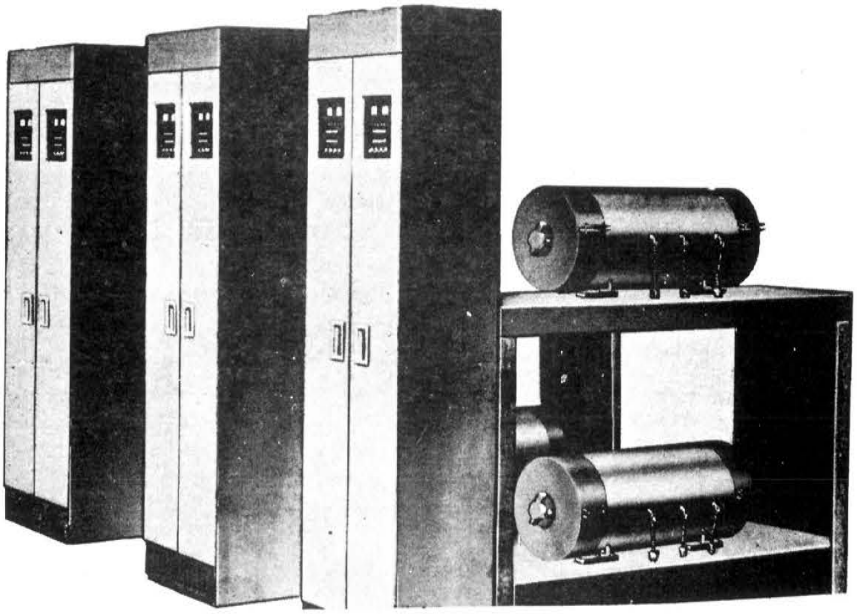

Figure 18-22 Control Cabinets and Two-Motor Alternators

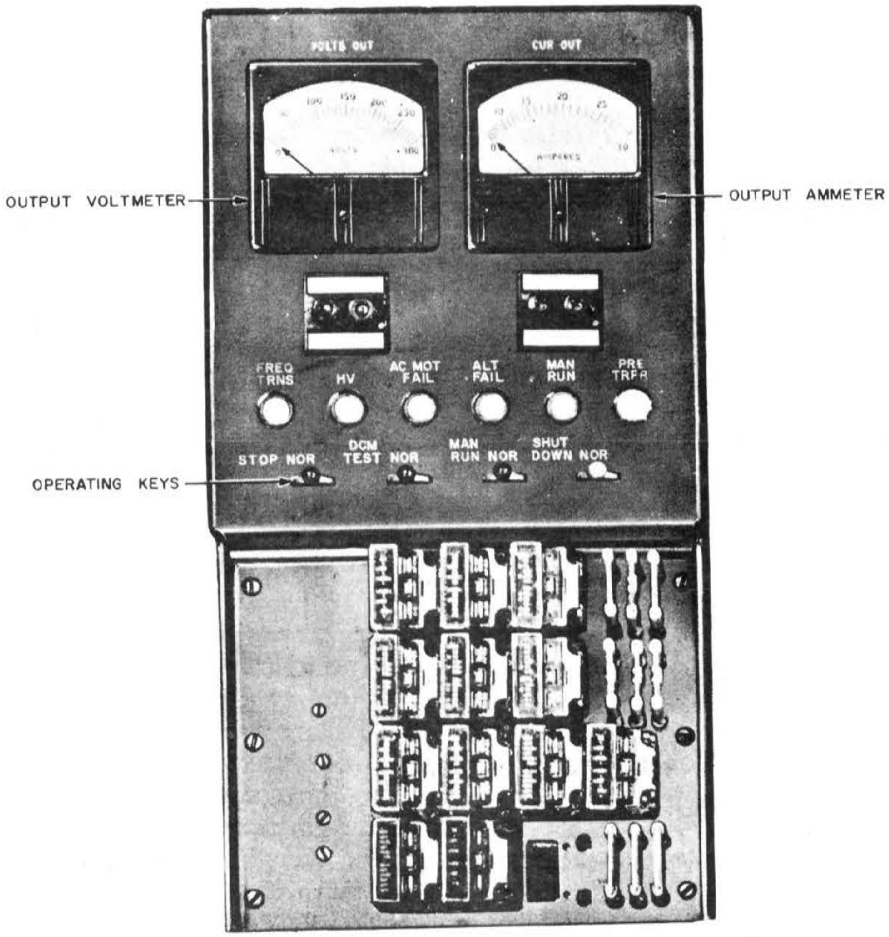

Figure 18-23 Main Control Panel

TCI Library: www.telephonecollectors.info

Transistorized dc to dc converters are designed to convert an existing plant voltage (usually 48-volts), to a higher or lower potential for power requirements that do not justify the installation of a more expensive power plant.

The converter operates from an input of 48-volts and supplies 24-volts at one to 15 amperes. It is designed to replace former applications that utilized CEMF cells or resistors to reduce the 48-volt plant voltage to 24-volts. The converter is more desirable as it prevents uneven discharge of the 48-volt battery.

Other converters supply 120- or 130-volts at 0.75 amperes, 130-volts at 1.5 amperes and 24-volts at five amperes.

Transistorized inverters are used to supply alternating current from a direct current source. In the SD submarine cable system they replace the two-motor alternator sets used on earlier installations.

Some of the largest inverters in use are rated at 5 KVA and invert a 42- to 52-volt dc input to 400-cycle, square wave 230-volt ac regulated and unregulated output, to supply the high voltage rectifiers of the SD submarine cable system.

A 5 VA inverter designed for relay rack mounting operates from an input of 20- to 28-volts dc and is designed to furnish output of 16.6-volts dc, 4.1-volts ac and 55-volts ac at less than one ampere, for monitoring and testing submarine cable equipment at the unpowered end of the cable.

18.9 POWER CONDUCTORS AND FILTERS

A. TYPES OF CONDUCTORS

Conductors in armored cables or in conduit are used to extend the commercial power supply to charging, ringing and other motor driven equipment including rectifiers, and to lighting and plug fixtures. They are also used to distribute converted ac or dc power to the equipment in the telephone central office. Conductors may be insulated, solid or stranded wires or they may be bus bars which depend upon spacing and nonconducting supports, for their insulation. See Figure 18-24.

TCI Library: www.telephonecollectors.info

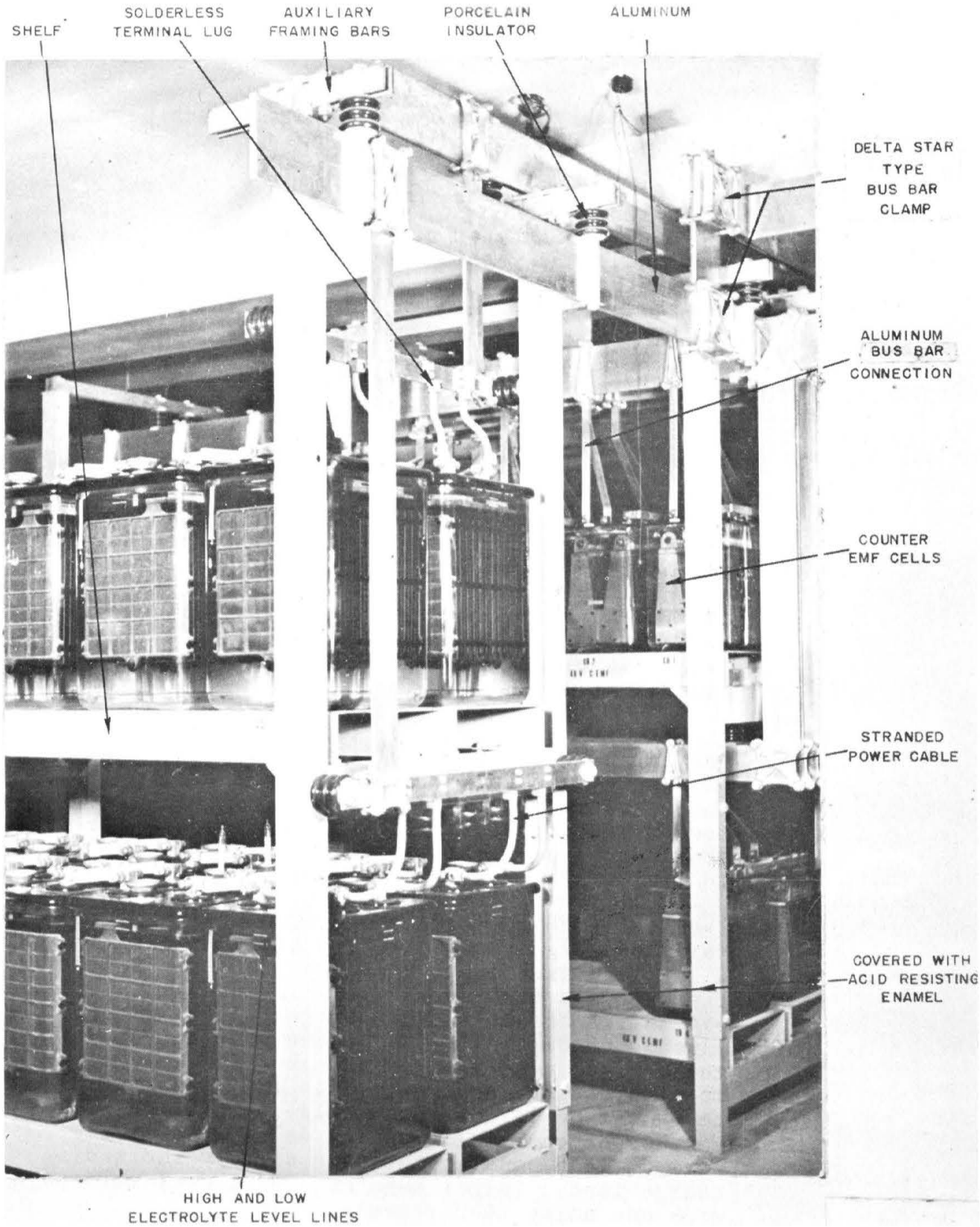

Figure 18-24 Bus Bar Connections At Battery Stand

TCI Library: www.telephonecollectors.info

The size of the conductor required for each particular application will depend on the following factors:

1. The safe carrying capacity. This is the amount of current a conductor will carry without becoming overheated. An open bus bar of a given sectional area will safely carry more current than an equivalent insulated wire or cable because the bus bar, being directly exposed to the air, radiates heat more readily than does an insulated wire or cable. In general, this factor is controlling for ac circuits since in dc circuits the voltage drop considerations usually dictate the size conductor thus insuring more than an adequate safe carrying capacity.

2. The permissible voltage drop. This is the amount that may be lost in a pair of conductors, and still supply sufficient potential at the end of the loop to insure that the apparatus served will not fail to operate. It is computed at the maximum current which the conductors are expected to carry. In some instances the allowable drop is in the order of one-tenth of a volt while in others, it may be one-fourth or one-half volt.

3. The limitation of noise. This is accomplished by making the conductors, which are a common source of supply to a number of circuits including telephone transmitters and receivers, sufficiently low in reactance or effective resistance so that the inductive effect is at a minimum. Noise control is covered later in this Section.

4. The fuse size to which the conductor is connected. Main discharge fuses are frequently selected which will carry indefinitely somewhat more current than the expected peak load. This is done as an extra precaution against large current surges due to unusual conditions. The conductors connected to those fuses must then be made sufficiently large to be protected by the fuses. This means that they must be larger than would be required because of carrying capacity determined by the maximum load, and in the case of very short discharge leads, larger than needed to meet voltage drop and noise requirements.

TCI Library: www.telephonecollectors.info

The various terms used with conductors, cables, and wire are:

1. "Armored Cable" is usually a multiconductor flexible cable consisting of flame retarding moisture - resistance wires helically wound with paper, or other fiberous covering, and a flexible metallic armor. The wire is 600 volt type "RH" braided rubber covered as defined by the National Electrical Code. Armored cable may be used in telephone power plants for power service to motors, rectifiers, for ringing and tone circuits and for frame and aisle lighting circuits where this does not conflict with local ordinances. Sizes are from No. 14 A.W.G. to 500,000 cm.

2. "Braided Rubber Covered" (BRC) cable and wire is usually 600 volt, type "RH-RW or RHW." It is made in sizes No. 14 A.W.G. to 800,000 cm and is run in power plant conduit or on racks.

3. "Cable" is an assembly of two or more conductors. Single conductors, solid or stranded, are called wire.

4. "Charge Conductors" are those that run between charging units and the battery or the point at which discharge conductors connect.

5. "Discharge Conductors" are those that carry discharge current from the battery. Counter-electromotive Force Cell (CEMF), electrolytic condenser and choke coil conductors are classified as discharge conductors.

6. "Filament Conductors" are those that carry direct current to filament circuits.

7. "Paired Conductors" are conductors of opposite polarity of a given circuit run closely together (but not necessarily twisted) so that the interlinking magnetic fluxes from currents in opposite directions neutralize each other. Three conductors (ground, 24 volts and 48 volts) are considered paired if run close together. Bus bars are considered paired if run on 3" centers, or as close as the plant equipment arrangements permit.

TCI Library: www.telephonecollectors.info

8. "Plate Conductors" are those carrying current to plate circuits.

9. "Service Circuits" are used to designate bus bars or wires connected to commercial power service or to a local reserve engine alternator set during power failure.

10. "Signaling Conductors" are those classified generally as telegraph, signal, ringing and tone.

11. "Singly Run Conductors" are those not paired with a conductor carrying current in the opposite direction.

12. "Sleeves" are conduit nipples or short lengths of conduit or smooth iron pipe or fiber duct. They are frequently used to protect cables or wires passing through walls or floors.

13. "Telegraph Conductors" are those carrying current to telegraph or teletypewriter equipment.

For convenience in handling, and in stocking the conductors, as well as the terminals and bus bar clamps used with them, power cables are limited to 800,000 circular mils in area, and bus bar 12 inches wide x 1/2 inch thick. Where more conductivity is required, parallel cables or laminated bus bars are used. In many instances, space considerations require the use of laminated bus bars less than 12 inches in width.

B. COMMERCIAL POWER SERVICE LEADS

Commercial power service supply leads are brought into the building and terminated on a service panel which is equipped with fuses or circuit breakers or other protective devices. From the service panel, circuits are extended to various parts of the building for lighting and other power services not directly associated with the telephone equipment and to a second service panel for telephone equipment known as the power service cabinet. All of this work is customarily arranged for by the telephone company prior to the start of the telephone installation work.

TCI Library: www.telephonecollectors.info

The power service supply for the telephone power plant is picked up at the power service cabinet by the installer, and extended, through fusing to the various machines, etc., with their control apparatus. Electric power service for frame and aisle lighting and for convenience outlets at frames and switchboards is usually picked up by the installer at the lighting panel boxes previously provided by the telephone company. All wiring which is either normally or intermittently connected to all commercial power supply sources or to equivalent sources such as reserve engine alternator plants located in the telephone buildings, is either run in conduit or with armored cable.

C. NOISE CONTROL

Precautions are necessary in power plant wiring, to insure that the currents flowing in or the voltages maintained on certain wires do not cause objectionable reactions on other circuits through inductive and capacity effects. The wiring connected to commercial power service, if not properly shielded and grounded, contributes to noise problems and causes other effects on talking circuits.

To reduce all these effects to a minimum, conductors are paired to neutralize their inductive effect. Talking (quiet) battery leads and signaling battery leads are run separately at specified distances apart. Conductors carrying ringing, tone and other high and low frequency ac currents having high voltage peaks including service circuits, are run in armored cable or conduit. In addition, leads which feed amplifiers are shielded since any inductive effect would be amplified along with the voice current.

The direct current required in a central office in general falls into two classes, "signaling battery" which is used to operate all the various types of electromechanical apparatus such as relays etc., and "talking battery" which supplies the medium for voice transmission. Since practically all equipment for generating direct current introduces ripples or noise in their output, it is necessary that battery filters be used to keep such disturbances at a minimum. Figure 18-25 indicates graphically the effect of a filter on an irregular wave form having high frequency ripples or noise.

TCI Library: www.telephonecollectors.info

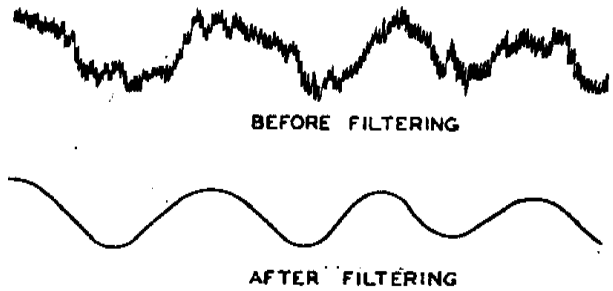

Figure 18-25 Effect Of A Filter On An Irregular Wave Form

Battery filters consist essentially of an inductor (retardation coil or coils) and a pair of (or one) electrolytic capacitors with a 20 ampere self-alarming fuse or with a 15 ampere fuse per capacitor between the filtered side of the inductor and ground. An alarm fuse is wired in parallel with each 15 ampere fuse. Filters come in capacities of 10-200 amperes. Large common filters, formerly located in the power room, have been replaced by the decentralized type which are mounted on relay rack bays, fuse bays, cable racks, on top of frames, and in switchboard turning sections, as required. The use of decentralized filters makes unnecessary separate power cable runs for signal and talking battery between the power plant and the various frames. This not only results in a saving in power cables but also improves the troublesome noise and crosstalk exposure encountered with former common filter arrangments and noise caused by a common drop.

The inductor of the filter impedes the fluctuations in the talking battery and the capacitor of the filter furnishes a bypass for the high frequency ripples (ac). A typical filter arrangement is shown in Figure 18-26.

In computing the values of the desired inductance and capacity, a combination is obtained which constitutes a "low pass" filter, that is, it will pass low frequencies that are not considered disturbing. It should be remembered that storage batteries also offer a low resistance to high frequency ripples and therefore contribute greatly in bypassing noise that might otherwise reach the discharge circuits.

TCI Library: www.telephonecollectors.info

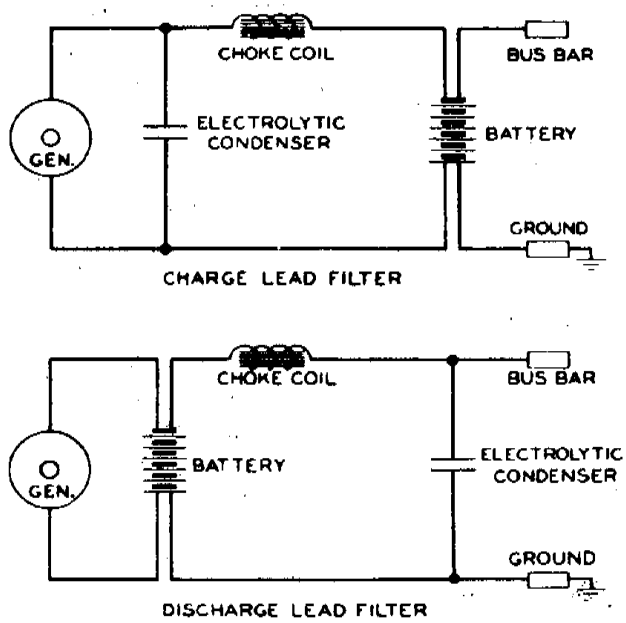

Figure 18-26 Typical Filter Arrangement

D. BUS BARS

Where space permits, in runs between charging machines, power boards and batteries, aluminum or copper bus bars are generally used. For any given current carrying requirements, an aluminum bus bar is approximately one and one-half times as large as a copper bar. Its weight is about one-half of that of the equivalent copper bar.

In addition to the weight advantage, which makes aluminum bus bars easier to handle than copper, it requires no protective finish even when located in rooms with open type storage batteries. And, it presents a very good appearance in a telephone office where most of the ironwork and apparatus is finished with aluminum paints and enamels.

To insure satisfactory contact, it is necessary to properly clean the contact area. Copper surfaces are normally cleaned with abrasive paper and then thin coat of NO-OX-ID "A" compound is applied. Aluminum surfaces are cleaned in a similar manner except that after the NO-OX-ID "A" compound is applied, the contact surfaces are scratch brushed to break up any soft oxide that may have formed. The reason for this is that metal oxidizes on exposure to the air, and if not coated with some material which will exclude the air, will cause poor electrical connections.

TCI Library: www.telephonecollectors.info

E. CENTRAL OFFICE GROUNDS

Earth connections or central office grounds, perform several important functions. One, it provides a low resistance path to earth, for dissipating lightning and other strong currents intercepted by lightning arrestors and protectors. Another, it grounds one terminal of the central office common battery to minimize electrical troubles in case of a cross with a high potential line. Usually, this is the positive (+) end of the batteries. If this were not done, that is, if a common battery telephone exchange were insulated from the earth, and some portion of the wiring became crossed with the wiring of an electric light, power or railway distribution system, the potential of the telephone system would be raised to that of the other system and subject the telephone apparatus to voltages which may be higher than they were designed to withstand and subject personnel to high voltages. Similarly, all frames, racks, etc., which support equipment are grounded so that they will not endanger people working in telephone central offices nor telephone apparatus and equipment.

Some circuits, used in the telephone plant, utilize the earth as part of their operating paths. This is particularly true of ringing circuits where selective and semiselective party ringing is used on subscriber sets and for dc telegraph and simplex or composited dc signaling.

Because grounds are important, it is customary to use the piping of water supply or gas distribution systems which can usually be depended upon to be of low resistance and have a high carrying capacity. In some instances, such as at repeater stations and small manual and dial offices, where water or gas system piping is not available, "made grounds" must be used. The standard method is to drive several pipes or rods into the ground, preferably in the basement of the building housing the telephone plant. The pipes or rods are spaced six to ten feet apart, and are bonded together to form a unit.

TCI Library: www.telephonecollectors.info

CHAPTER 19

CENTRAL OFFICE TEST FACILITIES

19.1 INTRODUCTION

Test facilities, such as testboards and test desks, are used to facilitate the location of troubles on toll and local circuits and to expedite the restoration of the service that has been interrupted. Before investigating the more common types of testboards and test desks used today, it would be helpful to examine the basic methods of measurements used in direct-current and alternating-current test circuits.

19.2 MEASUREMENTS IN D.C. CIRCUITS

A. INSULATION RESISTANCE

Measurements of faulty insulation is accomplished by connecting a voltmeter and battery in series with the wires under test. See Figure 19-1.

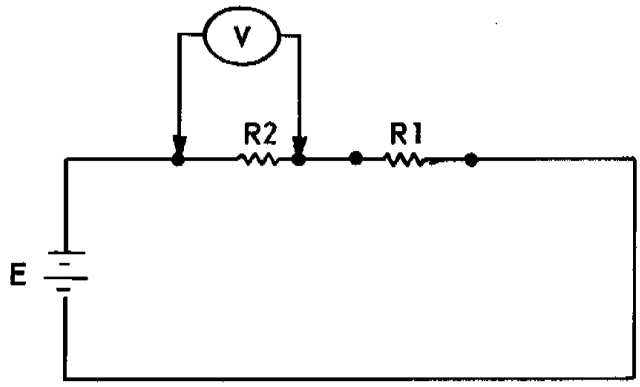

Figure 19-1 Insulation Measurement

Voltmeter V reads the drop across its own internal resistance, R2. The voltmeters used for measuring insulation are especially designed to have abnormally high internal resistances; the ones used in the standard testboard testing

TCI Library: www.telephonecollectors.info

circuits have a resistance of 100,000 ohms. The resistance of the fault, R1, may be found by determining the voltage drop (V) across the known resistance (R_2).

B. WHEATSTONE BRIDGE

The Wheatstone Bridge is an invaluable instrument in locating the four common types of line faults encountered in the open wire and cable plant. These faults are essentially crosses, grounds, opens and resistance unbalance.

Figure 19-2 illustrates the conventional type of Wheatstone Bridge. It consists of a network of resistors with a galvanometer connected between one set of diagonally opposite corners and a battery between the other set of diagonally opposite corners.

If the resistance of the A arm is assumed to be equal to that of the B arm and the total resistance consisting of the A and X arms is assumed to be greater than the total resistance consisting of the B and R arms, more current will flow through the resistances B and R than through the resistances A and X. Consequently, the voltage drop across B will be larger than that across A, and the junction between resistances A and X will be at a higher potential than that between resistances B and R. The net result will be that an unbalance current will flow downward through the galvanometer.

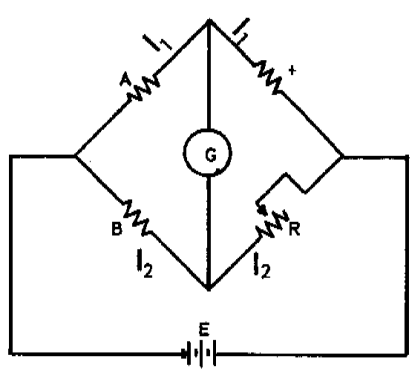

Figure 19-2 Basic Wheatstone Bridge Circuit

TCI Library: www.telephonecollectors.info

If the resistance of the R arm of the bridge is varied until the current flowing through the resistances B and R is equal to that flowing through the resistances A and X, the voltage drop across B will be equal to that across A. Since the junction between resistances A and X then will be at the same potential as the junction between resistances B and R, no current will flow through the galvanometer. Under this condition the bridge is said to be balanced. This is also the condition of the bridge at the completion of measurements made on cable or open wire conductors. When the bridge is balanced and the resistance of the three arms of the bridge are known, the resistance of the fourth arm may be calculated.

Wheatstone bridges are usually constructed so that the resistance in the A and B arms can be varied to suit the needs of a particular test. The A and B arms are commonly called ratio arms since by changing the ratio A/B the range of resistances which can be measured is materially increased. Mathematically, the unknown resistance X is found by multiplying the ratio A/B by R.

C. SIMPLE LOOP TEST

To make simple loop tests, the circuit shown in Figure 19-3 is employed. In this circuit, the X (unknown resistance) arm of the bridge shown in Figure 19-2 is replaced by a pair of wires which have been looped or connected together at the distant office. When the bridge is balanced, no current flows through the galvanometer and the loop resistance (L) is found by multiplying the ratio A/B by R. If the ratio arms A and B are made equal, then A/B becomes equal to one, and L is equal to R.

Measurements of the loop resistance of open wire or cable pairs thus can be made by short-circuiting the two wires of a pair at the distant office and measuring the resistance of the wires by means of the bridge at the home office.

D. VARLEY LOOP MEASUREMENTS

A Varley loop measurement is a special type of loop resistance measurement which is used for locating troubles such as grounds and crosses. A line fault location by the Varley loop method requires the use of one good wire in addition to the faulty wire. It consists essentially of the determination of the loop resistance of the conductors between the fault and the distant office.

TCI Library: www.telephonecollectors.info

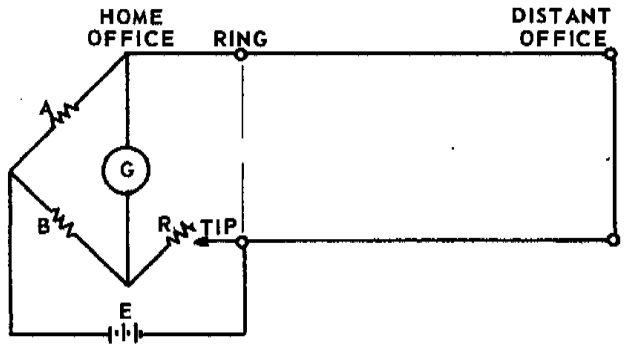

Figure 19-3 Circuit for Simple Loop Test

Figures 19-4 and 19-5 are schematics showing the equivalent bridge circuits for making grounded and metallic Varley measurements, respectively. A grounded Varley measurement, shown in Figure 19-4, is one in which the return path from the fault to the battery is through ground. A metallic Varley measurement, shown in Figure 19-5, is one in which the return path is through a wire. The magnitude of the resistance in the return path does not affect the bridge balance; however, it does affect the bridge sensitivity and, therefore, the accuracy of the measurement.

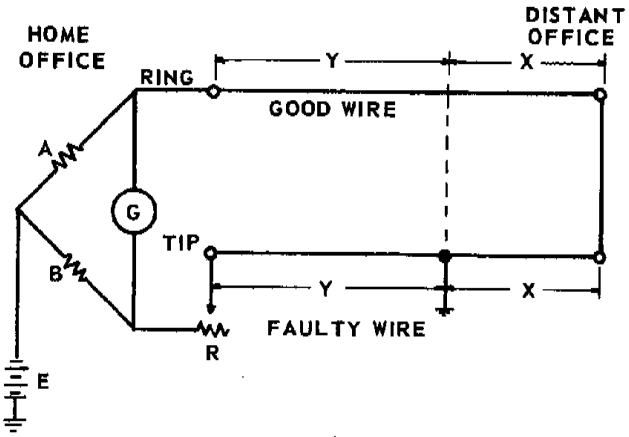

Figure 19-4 Schematic Circuit for Grounded Varley Measurement

TCI Library: www.telephonecollectors.info

In both figures, assume the values of the Wheatstone Bridge ratio arms A and B to be equal, the good and faulty wires to have equal conductor resistance, Y to be the resistance of one wire from the home office to the fault, and X to be the resistance of that wire from the fault to the distant office. Since the ratio A/B is equal to one, it is easily shown that

$$R = 2X = V$$

The balancing resistance, R, is equal to the loop resistance from the fault to the distant office, and is known as the Varley measurement or V.

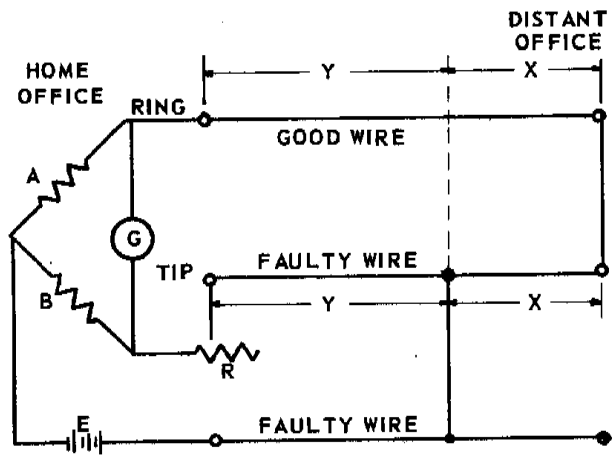

Figure 19-5 Schematic Circuit for Metallic Varley Measurement

E. MURRAY LOOP TEST

The theory of the Murray loop test is similar to that of the Varley. But instead of setting the arms A and B to have equal values and using the adjustable balancing resistance R to compensate for the difference in wire resistance between the good wire connection and the defective wire connection, the arm B is eliminated altogether and the variable resistance arm is connected in its place as shown in Figure 19-6. In this arrangement, the ratio of the reading R to the setting of the arm A, is equal to the ratio of the

TCI Library: www.telephonecollectors.info

resistance of the defective wire from the home office to ground to the resistance of this same wire from ground, to the distant office plus the resistance of the good wire, or expressed mathematically.

$$\frac{R}{A} = \frac{X - Y}{X + Y}$$

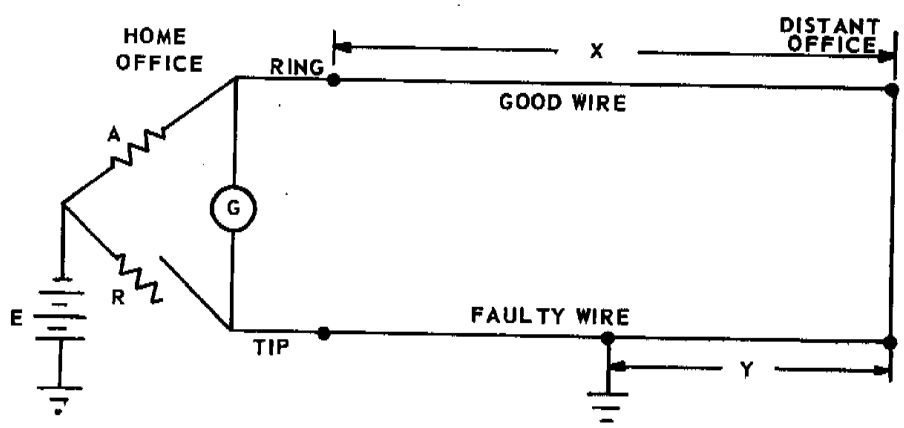

Figure 19-6 Schematic Circuit for Murray Test

The advantage of the Murray test in locating a fault is that the test does not require the use of a third wire (good wire) as would be necessary in the Varley method. Except in certain special conditions involving rural lines or one pair service cables, the Murray test is rarely used in telephone practice for locating grounds or crosses. The Murray type connection is commonly used, however, for locating opens. But since the wires here are open, it is obvious that no ordinary direct current measurement can be made. Instead, a low frequency alternating current is generated by means of an interrupter which reverses the battery voltage several times a second and simultaneously reverses the polarity of the galvanometer connections. The bridge, when balanced, then compares the capacitance of the good wire to its far end with that of the defective wire to the point where it is open.

TCI Library: www.telephonecollectors.info

19.3 MEASUREMENTS IN A.C. CIRCUITS

A. IMPEDANCE MEASUREMENTS

It is important to match impedances at junction points of communication circuits in order to eliminate unnecessary transmission losses or other undesirable effects. This makes it necessary, for practical maintenance purposes, to have available a device which can measure impedances accurately.

Figure 19-7 indicates the principle of a simple bridge circuit widely used in the telephone plant for measuring impedances in the voice-frequency range between 100 and 3000 Hertz. As shown, the unknown impedance is connected in one arm of the bridge and the balancing arm consists of a variable resistor and a variable inductor in series. Arms R_a and R_b are resistors of equal value. Measuring current is supplied from a variable oscillator capable of delivering satisfactory waveshape and output through the range of voice frequencies for which the bridge is designed. The values of R and L, when adjusted so that no current is in the telephone receiver, will be equal to the corresponding values of the unknown impedance. The circuit as shown in the diagram could measure only an inductive impedance. The practical circuit, however, is arranged so that the variable inductor may be switched into the other arm of the bridge in series with the unknown impedance. When the bridge is balanced in this condition, the inductometer in effect gives a measure of negative inductance, which is equivalent to capacitance. The variable units are actually calibrated to read resistance in ohms and inductance in millihenries, but the readings may readily be converted into reactance and impedance values by the application of basic a-c equations.

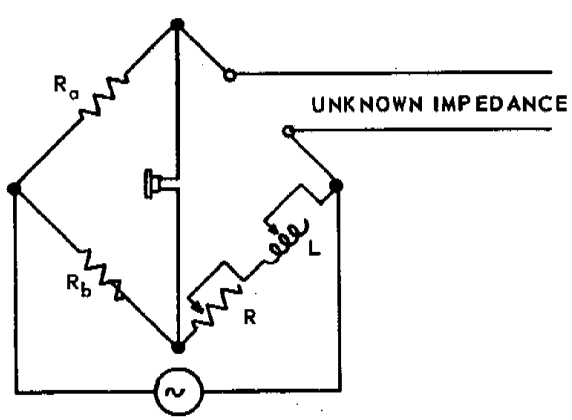

Figure 19-7 Simple Impedance Bridge

TCI Library: www.telephonecollectors.info

Other bridge designs, operating on a basically similar principle, are used for impedance measurements at higher frequencies. One of these, which is satisfactory for measurements between 1800 and 35,000 Hertz, is shown schematically in Figure 19-8. The bridge here is the familiar hybrid coil. When the unknown impedance connected to the "line" side of the coil is matched by the adjustable impedance connected to the "net" side of the coil, voltage applied to the series winding from an oscillator will produce no current in the bridge connection to the amplifier-detector. It will be noted that the reactance adjustment in this circuit is made by means of a variable capacitor rather than an inductometer. If the reactance of the unknown impedance is inductive, the variable capacitor is transferred by an appropriate switch to the line side of the coil in series with the unknown impedance.

Another bridge, designed for making measurements between 1 and 100 KHz, is shown in Figure 19-9 in a simplified schematic. This bridge differs from the usual circuit in that the ratio arms are four pairs of equal resistances, and the variable and unknown impedances are connected between mid-points of opposite pairs. The impedance is measured when the bridge is balanced in terms of resistance and capacitance in parallel rather than in series, and switches are provided to transfer the variable elements to the opposite side of the bridge if this should be necessary to secure balance.

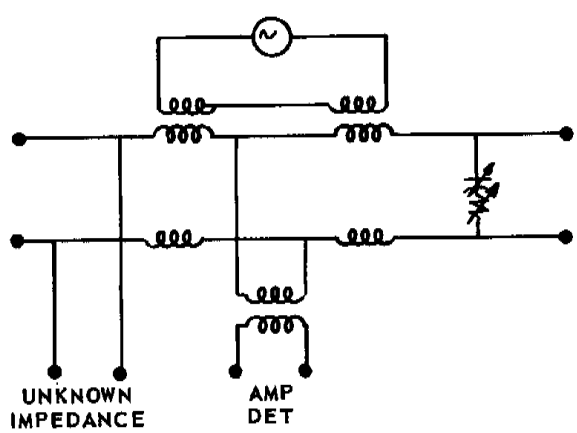

Figure 19-8 Hybrid-Type Impedance Bridge

TCI Library: www.telephonecollectors.info

One of the major uses of the impedance bridge in practical communications work is the location of impedance irregularities in long wire circuits. The impedance of a long line that is free from irregularities and terminated in its characteristic impedance, when measured over a wide band of frequencies, will appear as a smooth curve over the measured frequency range. If, however, there is an impedance irregularity along the line, such as might be caused by a defective or improperly located loading coil, some part of the energy applied to the line at the sending end will be reflected back from the point of irregularity. The reflected wave will add to or subtract from the initial applied wave, depending on its phase relationship when it reaches the sending end. The sending end impedance will be affected accordingly. The phase of the reflected wave with respect to the initial wave of course depends on the time it takes to travel from the irregularity to the sending end or, since the velocity of propagation is a constant for a particular type of facility, on the distance from the irregularity to the sending end.

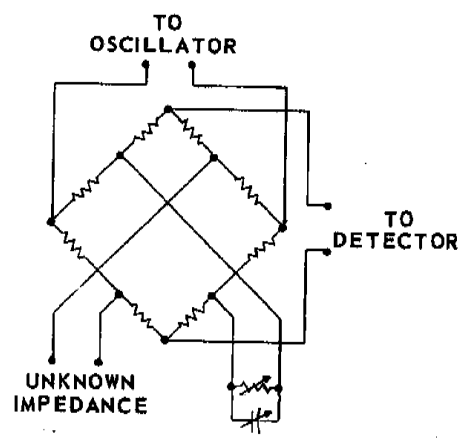

Figure 19-9 Simple Impedance Bridge

B. TRANSMISSION MEASUREMENTS

Most widely used, of the many types of measurements required in communications work, are those known as transmission measurements. These are measurements of the ratio of the power at the receiving end of a transmission line to the power applied to the transmitting end; this

TCI Library: www.telephonecollectors.info

indicates the loss or gain of a circuit in terms of decibels or comparable logarithmic units. Two basic methods of making transmission measurements are commonly employed. The first is a direct method in which a known amount of power (generally 1 milliwatt) is applied to the sending end of the circuit under test and the power at the receiving end is measured by a direct-reading meter in terms of db or dbm. This is obviously the simpler method and is used wherever practicable. In situations where it is not feasible to supply a known fixed power at the sending end of the circuit, a comparison method is used in which the loss or gain of the circuit under test is measured by comparing it with a known, calibrated loss or gain.

For routine checking of telephone circuits, transmission measurements are usually made at a single frequency of 1000 Hertz and, in most cases, the direct method of measurement is employed. Fixed testing power of 1 milliwatt is supplied at the sending terminals from a 1000-Hertz source of power, which consists of a small magneto-generator. At the receiving end, the power is amplified, rectified by copper-oxide varistors, and supplied to a d-c meter reading directly in db or dbm. The detailed circuit arrangement is shown in Figure 19-10. Where measurements at frequencies other than 1000 Hertz are required, the same receiving circuit may be used, but the sending power is furnished by an appropriate variable oscillator. To insure that the test power is at 1 milliwatt, the oscillator output is calibrated against a fixed 1000-Hertz generator output for each series of measurements at other frequencies.

In situations where a fixed known testing power source is not available, as would ordinarily be true in the case of portable transmission measuring sets, the comparison method mentioned above may be employed. The general principle of this type is illustrated in Figure 19-11. The set is first calibrated by connecting a voltage to a fixed artificial line which causes a definite known loss. The entering current, after passing through this line, is amplified and rectified and passed through a potentiometer to a d-c meter. The value of the applied voltage is then adjusted to such a value as to give any desired deflection of the meter, usually at mid-scale. After calibrating, connections are changed so that the same voltage is applied to a variable artificial line in

TCI Library: www.telephonecollectors.info

series with the circuit whose equivalent is to be determined. By cutting out sections of the artifical line, the total loss in the circuit is made the same as that in the calibrating circuit, so that the d-c meter gives the same deflection in both cases. The dials are arranged to read the loss in the unknown circuit directly.

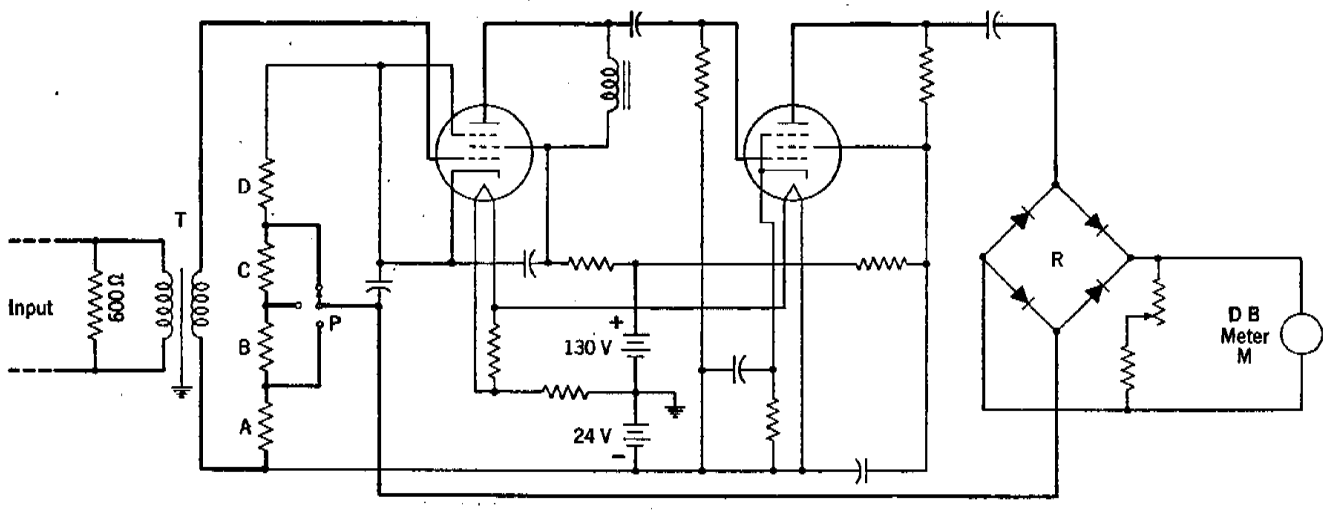

Figure 19-10 Direct Reading Transmission Measuring Set with Amplifier

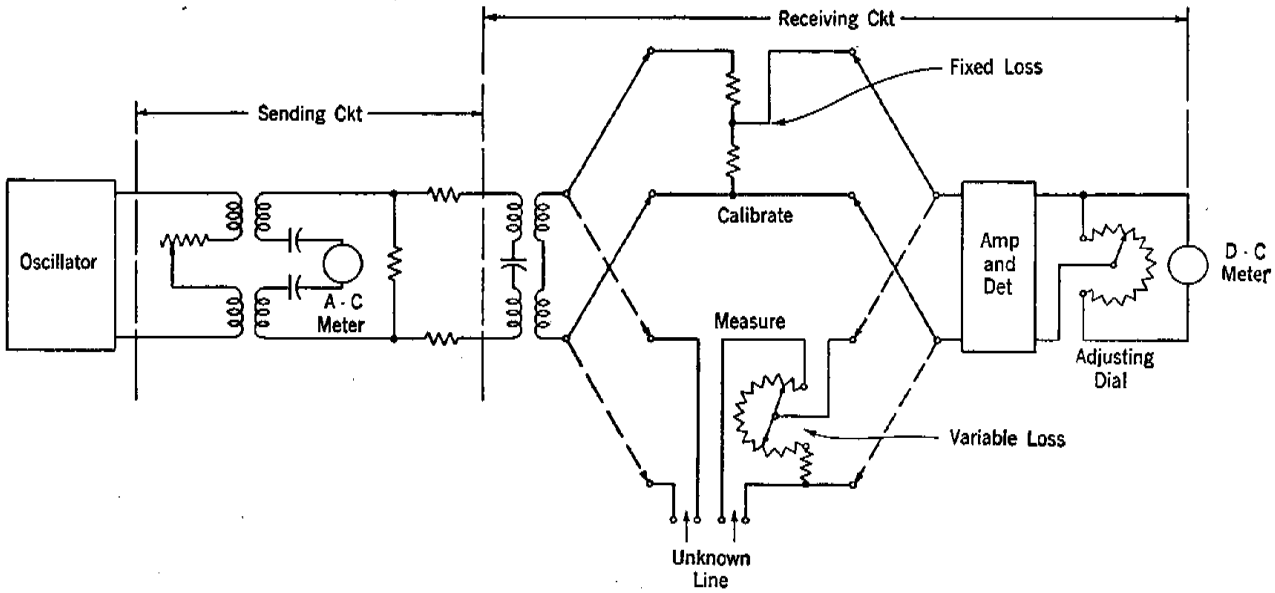

Figure 19-11 Principle of Transmission Measuring Set

TCI Library: www.telephonecollectors.info

For transmission measurements at higher frequencies up to 350 KHz, both comparison type and direct-reading sets are extensively used in the telephone plant. The principles involved are not essentially different from those already discussed for measurements at voice-frequencies, although the measuring sets themselves are necessarily somewhat more elaborate in design. The comparison type sets generally employ thermocouple detectors to drive a direct-reading meter. The receiving circuits of the direct-reading sets are essentially super-heterodyne detectors, the outputs of which are fed to d-c milli- or microammeters reading directly in dbm. Appropriate types of variable oscillators must be employed with each measuring set.

C. NOISE MEASUREMENTS

Voltages within the voice-frequency range, induced in a telephone circuit by electric power circuits, are manifested to a listener on the telephone circuit as noise. In many cases, crosstalk currents may also appear merely as noise. This is particularly true in the case of cable circuits where any crosstalk heard is likely to come simultaneously from a considerable number of other circuits, and appears to the listener on the disturbed circuit as a special form of noise, called "babble." In other words, it is just an unintelligible conglomeration of speech sounds coming from a large number of sources.

The disturbing effect of noise to a listener depends first, of course, upon its volume. It also depends upon the frequency of the noise currents. Figure 19-12 shows the results of tests that have been made to determine the relative disturbing effects of various noise frequencies. It will be noted that the disturbing effect peaks up rather sharply in the neighborhood of 1100 cycles. Where noise is of appreciable volume - particularly in the more sensitive frequency range - it is naturally annoying to the telephone user and may seriously reduce the intelligibility of conversation. It is accordingly necessary to keep the noise in working telephone circuits below those limits where its interfering effect on conversation will be important.

TCI Library: www.telephonecollectors.info

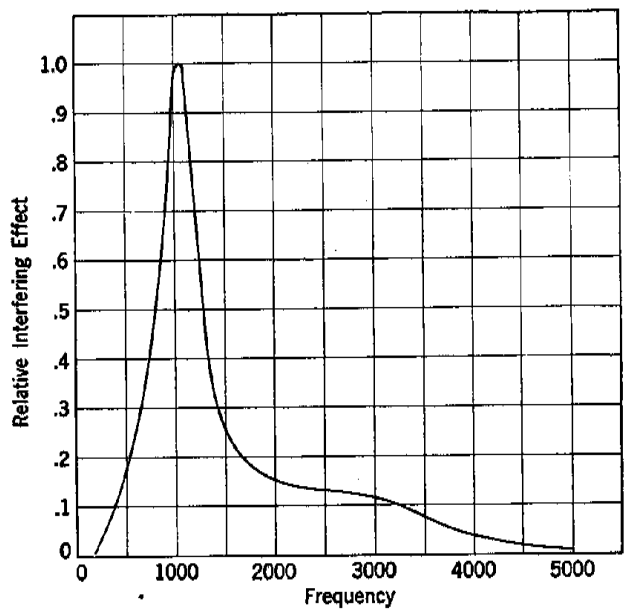

Figure 19-12 Relative Interfering Effect of Noise at Different Frequencies

Noise measurements differ from transmission loss measurements in that the received current which is introduced into the measuring circuit is much smaller and necessitates the use of a more sensitive amplifier. Since no sending power is employed and since no unusual terminations are required at the distant end of the circuit being tested, noise and crosstalk volume measurements can be made on a bridging basis with normal circuit terminations during the momentarily idle periods while the circuits are in service.

The ideal objective of the various methods for counteracting crosstalk and noise induction in telephone circuits is to eliminate their effects altogether. In practice this ideal is rarely attained. But certain practical limits are established, and every reasonable effort is made to keep the crosstalk and noise below these limits. In designing and maintaining circuits, therefore, it is desirable to be able to make definite quantitative measurements of both crosstalk and noise. As in any other kind of measurement, this requires the establishment of definite units.

TCI Library: www.telephonecollectors.info

The measure of either crosstalk or noise that would be of major significance is the extent of the interference or annoyance to which a listener on a disturbed circuit is subjected. Since such a measure is obviously affected by numerous subjective factors, it is clear that completely objective quantitative measurements of crosstalk and noise effects are practically impossible. It is possible, however, to make precise quantitative measurements of the crosstalk coupling between a given sending point on a disturbed circuit and a given receiving point. Essentially this is simply the measurement of the transmission loss between the two points, and like any other transmission measurement it may be made at one or more frequencies as desired. Such a measurement gives a value of what is known as "crosstalk coupling loss" in db. A more commonly used measure of crosstalk coupling employs a unit designated dbx, which expresses the coupling in db above "reference coupling." Reference coupling is equivalent, broadly speaking, to a crosstalk coupling loss of 90 db, and is formally defined as "the coupling which would be required to give a reading of zero dba on a 2-type noise measuring set connected to the disturbed circuit when a test tone of 90 dba (using the same weighting as that used on the disturbed circuit) is impressed on the disturbing circuit."

Another unit sometimes used for measuring crosstalk coupling is the "crosstalk unit," abbreviated CU. The number of crosstalk units representing any given coupling is 10^6 times the ratio of the current or voltage in the disturbed circuit to the current or voltage in the disturbing circuit at the two points under consideration; or, if the circuit impedances are not the same, 10^6 times the square root of the power ratio. The relationships between the three measures of crosstalk coupling are shown graphically in Figure 19-13.

For measuring noise, a basic reference point has been selected, which is equal to 10^{-12} watts of 1000-Hertz power. This corresponds to 90 db below 1 milliwatt (-90 dbm). Noise may then be measured in terms of number of decibels above this reference point. However, the interfering effect of noise on a listener varies with both the level and the frequency; and the relative importance of the components of noise at the different frequencies must be taken into consideration in determining the total amount of interference.

TCI Library: www.telephonecollectors.info

The interfering effect also varies according to the sensitivity of the receiving device that converts the noise currents into audible sound. For these reasons, in measuring noise, it is desirable to employ "weighting networks" which act to integrate the noise power over the voice-frequency range by giving each small band of frequencies a weighting proportional to its contribution to the total interfering effect. Different weighting networks may be used with different receiving devices. Even so, equal values of db reading will not necessarily indicate equal interfering effects without some adjustment of the calibration constants. In practice, an adjusted unit designed dba is employed, which measures the acoustic interfering effect of the frequency-weighted noise energy. Equal values of dba measured across any receiving device, with proper weighting used, should indicate approximately equal interfering effects.

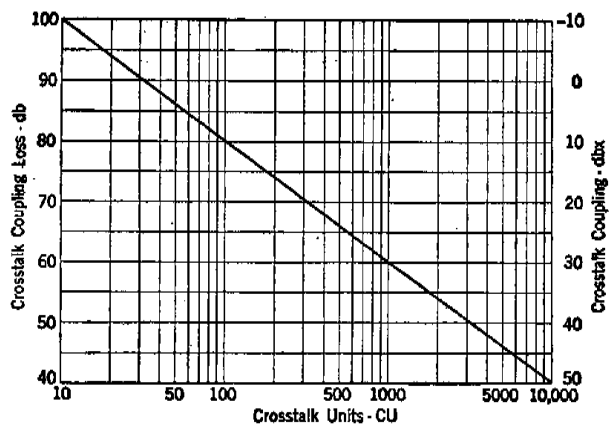

Figure 19-13 Relations Between Crosstalk Measuring Units

19.4 TOLL TESTBOARDS

A. GENERAL

Many of the toll testboards and much of the testing equipment still in use are considered obsolete and will not be described here. When engineering effort is to be expended

TCI Library: www.telephonecollectors.info

on these obsolete items, considerable research and careful engineering is required on the part of the engineer. We will therefore consider only the more common units which are currently in general use.

B. TOLL TESTBOARD CLASSIFICATIONS

Toll testboards fall into three principle categories:

1. Primary testboards

2. Secondary testboards

3. Telegraph testboards

Primary testboard positions are used to terminate the toll line cable and open wire pairs. The primary jacks permit ready access to the line conductors to facilitate testing them and determining the type and location of any existing trouble. These jacks also permit patching on a temporary basis defective cable pairs or toll terminating equipment.

Secondary testboard positions provide an appearance of the circuit on the drop side of cable equipment or a complete appearance of open wire lines (in toll test stations equipped with both a primary and secondary testboard). Facilities are provided for monitoring, talking and signaling on circuits as desired and for patching or making operating tests on drop circuits and ringer equipment. In some cases, such as the No. 18-B type of testboard, "test and out of service" jacks are provided as an exact multiple of the toll line multiple in the toll switchboard.

The third category, telegraph testboards, service both line and subscriber telegraph circuits.

A simplified diagram giving the relationship of the primary and secondary positions of toll testboards is shown in Figure 19-14.

C. NO. 17 TOLL TESTBOARDS

The No. 17B toll testboard has been developed to replace both the multiple and nonmultiple No. 8 test and control board. From a functional point of view the No. 17B

TCI Library: www.telephonecollectors.info

toll testboard is the same as the No. 8 test and control board, in that it continues the direct reporting of intertoll trunk (toll line) troubles by the operator to the test board attendant and provides overall toll circuit testing features.

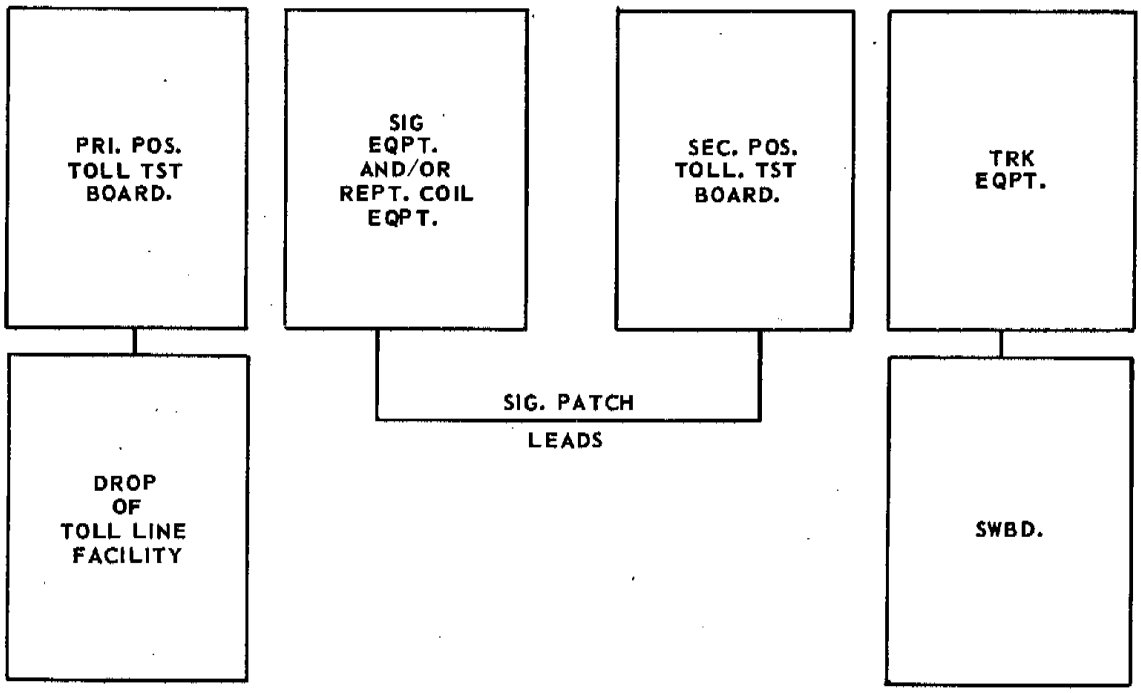

Figure 19-14 Relationship of Primary and Secondary Positions of Toll Testboard

The No. 17B toll testboard is designed for use in a No. 5 crossbar office, a crossbar tandem office at toll switching points, and is associated with switchboards such as No. 1, 3 type, or No. 11, for facilitating the location of troubles on toll circuits and to expedite the restoration of service when it has been interrupted. The testboard consists of a lower unit housing testing equipment and a jack field in which appears the intertoll trunks and community dial office trunks. In some cases patching jacks are provided.

TCI Library: www.telephonecollectors.info

The equipment consists of facilities for monitoring and talking on a trunk, for making 1000 Hertz transmission measurements, noise measurements, signaling, timed ringing and miscellaneous other tests. The lower unit consists generally of the keyshelf and associated cord and test circuit.

Intertoll dialing (ITD) and community dial trunks and miscellaneous test circuits are on standard jack field frameworks. Patching jacks are provided on a four-jack basis per ringdown intertoll trunk. Patching jacks are not provided for intertoll dial trunks.

The No. 17C toll testboard is a variation of the No. 17 type testboard which is designed specifically to operate with the four-wire intertoll trunks of the No. 4 crossbar toll switching systems. It is used for making overall tests of the toll circuits. Supplementary jack bays are used for patching.

D. NO. 18B TOLL TESTBOARD

The No. 18B toll testboard is used to facilitate the location of troubles on toll circuits and to expedite the restoration of service that has been interrupted. It permits over-all testing of toll circuits and serves the purpose of a primary board, combined board, and decentralized toll, Dial System A, or crossbar tandem testboard, by providing all of the jack appearances and testing equipment usually required for the testing, patching, and maintenance of intertoll trunks and their associated office equipment. A view of this testboard is shown in Figure 19-15.

The testboard is primarily designed to be associated with switchboards, such as No. 3, 3C, 3CF, 3CL, or 11 (sleeve supervision), but may also be used with crossbar tandem offices and decentralized toll switchboards. The testboard secondary cords may be modified with an auxiliary secondary cord circuit so that the testboard may be associated with No. 1 and 2 toll switchboards or 9C, 10 and 12 toll positions in manual offices or connecting company offices. The auxiliary secondary cord converts the 48-volt ringing signal from the position circuit to 20-Hertz ringing and converts the supervisory signal in the connecting circuit to sleeve supervision required in the testboard.

TCI Library: www.telephonecollectors.info

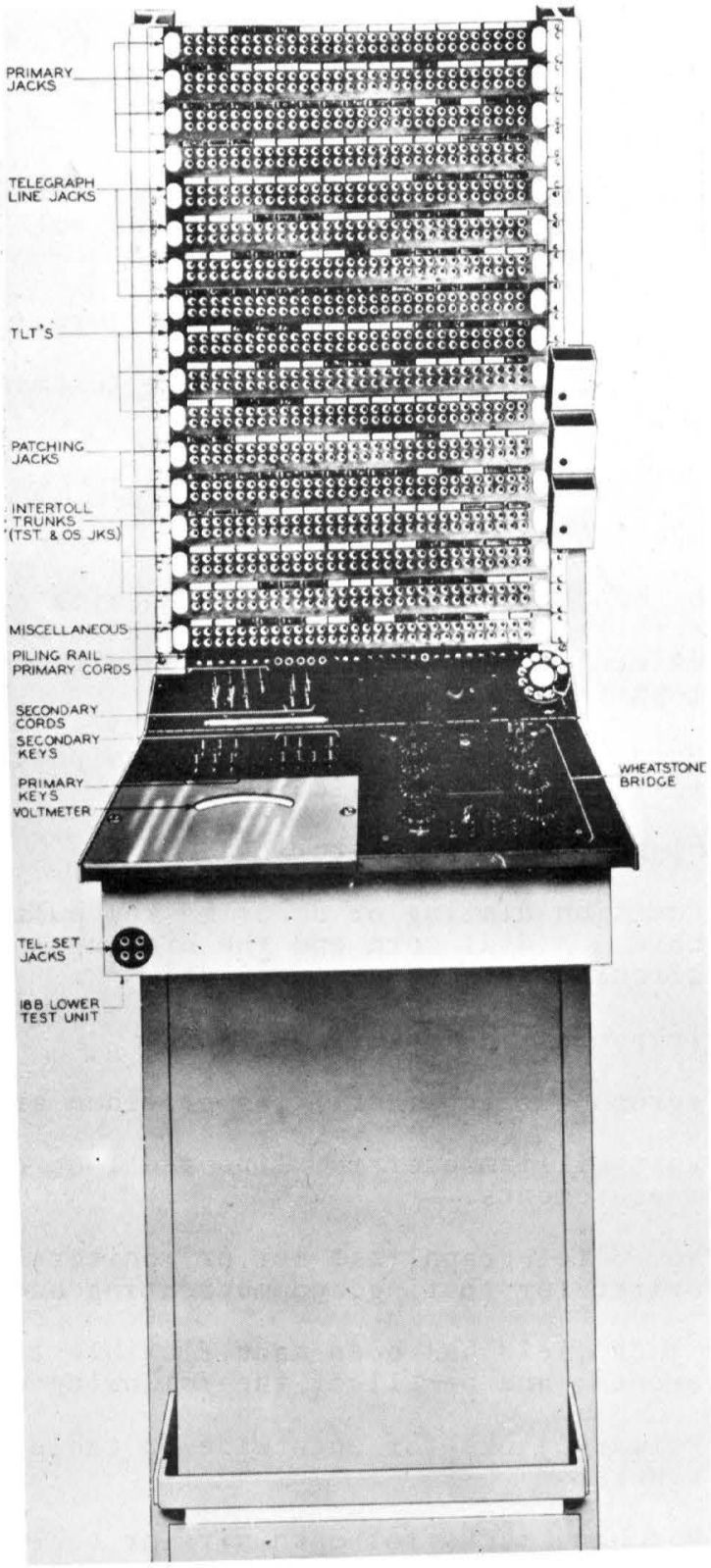

Figure 19-15 18B Toll Testboard

TCI Library: www.telephonecollectors.info

Primary testboard arrangement permits testing and maintenance of outside plant facilities on toll lines. Primary testing facilities provided are:

1. Single plug and twin plug test cord.

2. Talking and ringing to outside testmen or telegraph subscriber.

3. Voltmeter testing.

4. Wheatstone Bridge testing.

Combined testboard arrangement permits over-all testing of intertoll trunks and their associated office equipment by providing both primary and secondary test facilities. Secondary test facilities provide:

1. Cord circuits which may serve as patching, holding, testing, or talking cords.

2. High impedance monitoring.

3. Position dialing or dc or mf key pulsing on either cord. A dial cord and the dialing and supervisory circuit may also be furnished.

4. Transmission measuring.

Telegraph testing facilities provided are:

1. Volt-milliammeter for line and loop current measurements.

2. No. 3 telegraph test set or monitoring teletypewriter for testing, communicating and monitoring.

The jack field has been made flexible to meet various job requirements; and/or all of the following may be included:

1. Primary jacks for open wire or cable intertoll trunks.

2. Patching jacks for open wire or cable intertoll trunks.

TCI Library: www.telephonecollectors.info

3. Test and out-of-service jacks for intertoll trunks and community dial office trunk circuits.

4. Patching, monitoring and signal test jacks for full period talking in long line circuits.

5. Incoming and outgoing 2-way and test trunk circuits.

6. Telegraph line jacks.

7. Telegraph loop terminal jacks.

8. Miscellaneous test and out-of-service jacks.

E. NO. 19A TOLL TESTBOARD

The No. 19A toll testboard is used in No. 5 Crossbar (4 wire) toll offices for making over-all tests of the toll circuits. This testboard consists of a lower unit which houses testing and control equipment, and a jack field in which an appearance of the intertoll trunks (test jacks, patch jacks) and miscellaneous other trunks appear.

In line with the general design of the No. 5 Crossbar (4 wire) toll switching system, the circuits in this board are arranged on a 4-wire basis necessitating the use of twin jacks in the jack field and twin plugs on the cords which connect to these jacks.

The testing facilities available provide for monitoring and talking on a trunk and for making 1000 Hertz and multi-frequency transmission measurements, signaling, and miscellaneous other tests enabling the testman to diagnose the trouble which exists on a circuit, so that he may notify the proper maintenance group of the nature of the trouble.

F. NO. 9 TELEGRAPH TESTBOARD

The No. 9 telegraph testboard employs relay rack bays for mounting the jacks and testing equipment required for maintaining telegraph service. The telegraph testboard is divided into two major types as follows:

1. Telegraph Line Bays: The line bays contain generally only those jack circuits which stand between the interoffice lines or trunks and the equipment

TCI Library: www.telephonecollectors.info

in the telegraph office. A telegraph line bay contains a writing shelf or a test lower unit which contains cord-ended testing equipment. A jack field mounted in the upper part of the bay contains carrier and dc telegraph line jacks, interposition trunks, and miscellaneous jacks. The upper unit equipment also includes an apparatus panel, miscellaneous mounting plates, and, when so desired, terminal strips for the jack circuits.

2. Telegraph Loop Terminal Bays: The terminal bays are intended primarily for the administration of private-line telegraph service and contain jack circuits for patching and testing subscriber loops as well as directly associated equipment.

   A telegraph loop terminal bay contains either a test lower unit similar to that at a line bay or a shelf for mounting a teletypewriter. Above these is a jack field, consisting of various arrangements of 3, 4, 5, 6, 7, or 8 jack TLT circuits as well as interposition trunks and miscellaneous jacks. Above the jack field are telegraph relays and sounder and relays associated with the telegraph loop terminals. These relays operate under control of manual telegraph subscribers over their loops and are used to call in an attendant.

   In addition to the normal functions of the TLT positions, those particular positions in which the telegraph repeaters, assigned to teletypewriter switchboard ringdown, intertoll trunks, and automatic signaling trunks are terminated, are equipped with additional testing facilities. As these facilities test the teletypewriter switchboard circuits, they vary in design according to the type of switchboard.

The test lower unit equipment provides for the following:

1. Current and bias measurements in telegraph lines and loops.

2. Voltmeter tests to check continuity, voltages, polarities, loop leakage, and busy conditions on trunks.

TCI Library: www.telephonecollectors.info

3. Operating tests, that is, monitoring and communication with telegraph key and sounder or with teletypewriter.

4. Telephone communication with teletypewriter subscribers and with attendants in a distant office.

5. Telegraph communication with attendants in a distant office.

6. Teletypewriter orientation range scale measurements on associated teletypewriter.

Testing equipment not located in the testboard bays, but terminating there, provides facilities for making the following tests:

1. Hit indication on lines.

2. Transmission measuring.

3. Stability testing.

4. Loop current indicating.

To permit making transmission tests, sources of teletypewriter signals, biased and unbiased, and reversals signals, etc., are provided.

Means are also available whereby a testboard attendant at the line positions can associate a meter at the loop pad bay with any 130-volt subscriber loop arranged for inverse neutral operation in order to observe the current flowing in the loop. The attendant at the loop pad bay may then observe, and by means of the associated loop pad potentiometer, adjust the current to the proper value.

Several applications of jacks in the line bays and telegraph loop terminal bays are shown in Figure 19-16.

TCI Library: www.telephonecollectors.info

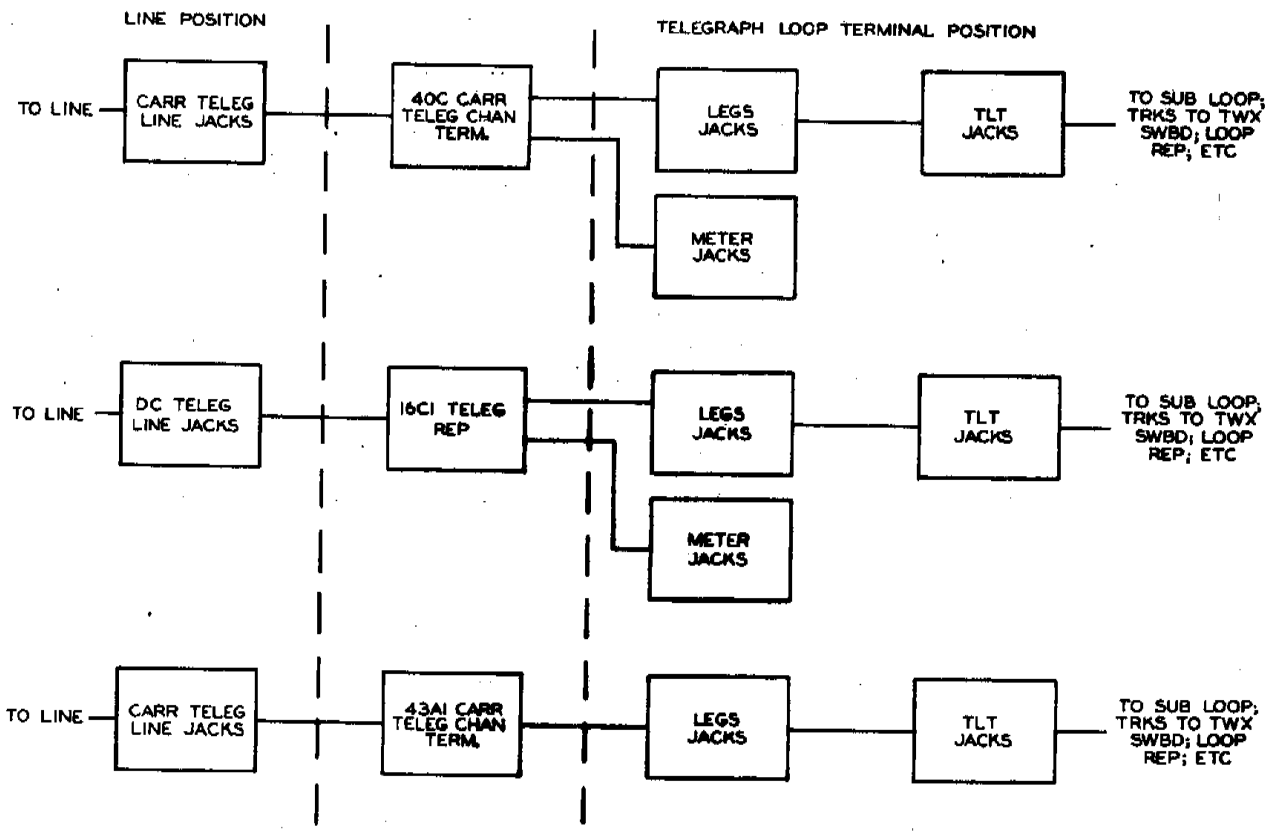

Figure 19-16 Typical Uses of Jack Circuits at Telegraph Testboard

19.5 LOCAL TESTING

A. GENERAL

Local testing facilities are furnished for the maintenance of all types of central offices, as well as the associated outside plant equipment. The testing methods used will vary in technique, from manually controlled tests to automatically controlled tests, depending upon the type and vintage of equipment being tested.

TCI Library: www.telephonecollectors.info

While the names of frames, cabinets and desks used for local testing would make a rather long list, only three types have been selected for discussion in this chapter. These three types of test facilities use nearly all of the techniques that would be found in a completed study of the local testing field. The testing facilities covered herein are the No. 14 local test desk, the master test frame (No. 5 crossbar), and the line insulation test frame.

B. NO. 14 LOCAL TEST DESK

The No. 14 local test desk is designed as a universal desk for use in all systems, manual, panel, step-by-step, and crossbar. The No. 14 local test desk is also universal in that it can be used on either a local or centralized basis, predominantly for outside of plant equipment. Also one test center can be arranged to serve any combination of offices.

The physical appearance of a local test desk is similar to a switchboard in that each position has a key and plug shelf, writing space and face equipment with 10-1/4 inch panels. See Figure 19-17. A number of positions may be located side by side forming a line-up.

The local test center, test desk, repair service desk and desks for supervision, are usually located in the same building, but in a separate room from the switching equipment. Local test centers may be furnished on a one per building basis; however, in metropolitan areas where the local office buildings are close together, the test centers may be furnished on a centralized basis. In centralized testing the local test center serves the building it is located in as well as a number of nearby buildings, with resultant savings in space, equipment and personnel.

The various tests are made under control of keys in the keyshelf. The connection to the line under test is obtained by single ended cords that are plugged into test trunks located in the face equipment. The cords are for the primary test circuit, secondary test circuit, and WHEATSTONE BRIDGE test circuit. An overlap exists between the test functions of the primary and secondary test circuits; each will perform some tests not performed by the other circuit as well as some of the same tests. The type of

TCI Library: www.telephonecollectors.info

functions common to both test circuits are means of establishing connections to subscribers' lines, talking, monitoring, and ringing. By operation of the reverse key, the association of the primary and secondary cords to the primary and secondary test circuits can be reversed, except for the howler which is only associated with the secondary test cord.

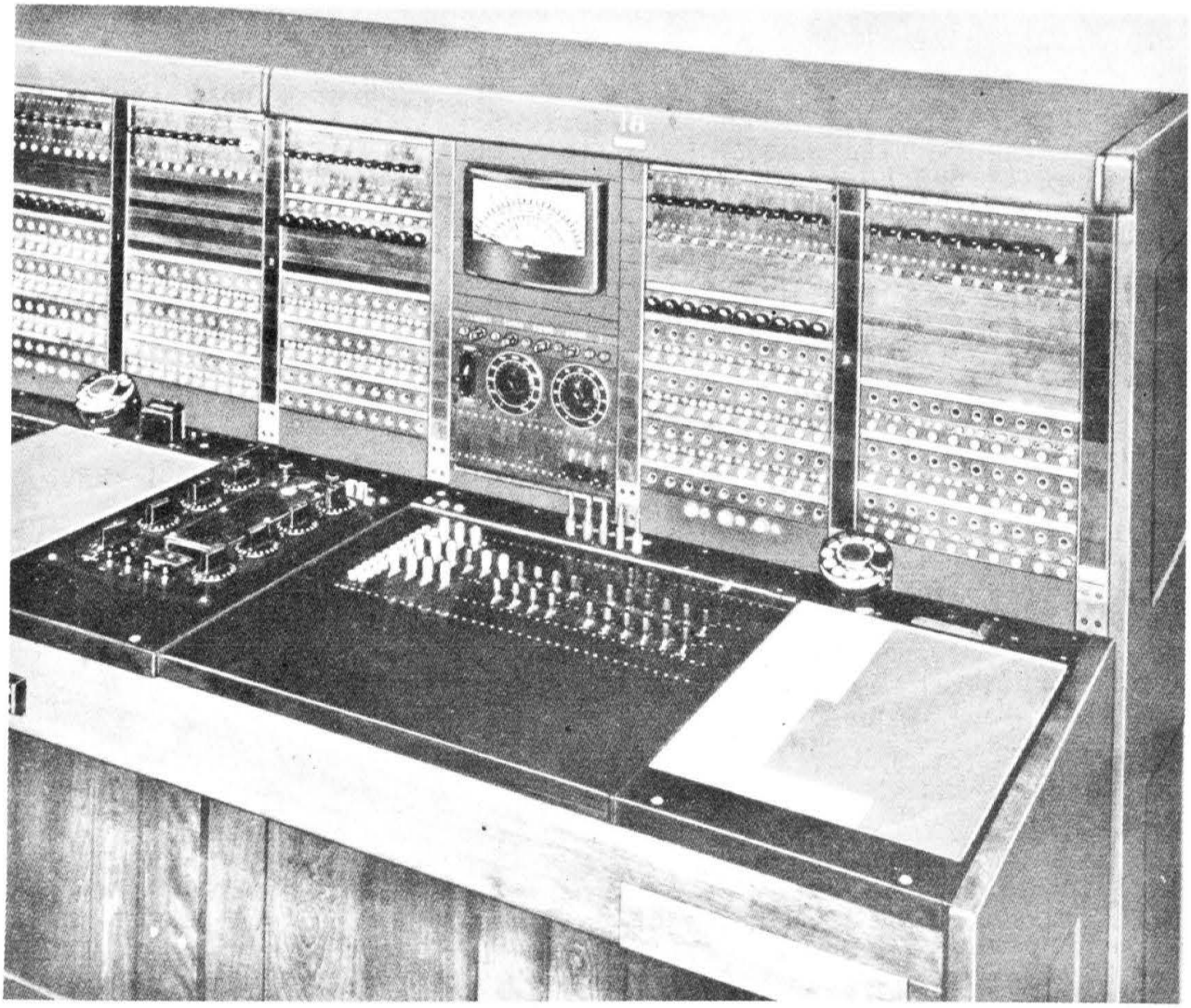

Figure 19-17 No. 14 Local Test Desk Test Position

TCI Library: www.telephonecollectors.info

The test trunks, which appear in the face equipment, test trunks to the MDF, in and out test trunks, intermittent trouble, wheatstone bridge test trunks, etc., terminate on distributing frames. The personnel working at the local test desk instruct the maintenance personnel what cross-connections are to be set up between test trunks and other lines or trunks. Communication between the testman and the local distributing frame is by a loudspeaker system. Call circuits and talking trunks are furnished for communication with other maintenance locations and operators at switchboards or toll testboards. The keys for controlling these talking connections are located in the top of the face equipment and multipled through the line-up but not necessarily on a position basis. The test center may also serve alarm receiving equipment and a teletypewriter for recording details of line failure from the line insulation test frame.

C. MASTER TEST FRAME

The testing facilities for mechanical switching offices have undergone evolutionary development to keep pace with the development of the switching systems. The present day facilities incorporate a considerable degree of automatic as well as manual testing techniques. For purposes of illustration in the text the master test frame of the No. 5 crossbar office will be discussed. This test frame incorporates procedures and techniques common to test frames of other switching systems, such as trouble indicator, trouble recorder, and sender test frames.

Practically all of the maintenance facilities in a No. 5 crossbar office are concentrated in several bays of equipment, known as the master test frame. This frame, together with other maintenance facilities, is located in a part of the office called the maintenance center. This center is usually located near the major common control frames, such as markers, senders and registers, to facilitate cabling and maintenance.

The principle maintenance functions performed by the master test frame are:

1. Automatically records, on punched cards, troubles encountered on service calls and equipment used on test calls.

TCI Library: www.telephonecollectors.info

2. Tests nearly all of the major circuits in the office.

3. Automatically monitors the pulsing performance of registers and senders during service and test calls.

4. Acts as a central control and observation point for the office.

The equipment of the master test frame consists primarily of a trouble recorder on automatic monitor, a master test circuit, and a jack bay for outgoing trunks. During unattended periods the alarms may be extended to a distant office.

D. LINE INSULATION TEST FRAME

The line insulation test equipment is arranged to operate on an automatic basis to disclose defects in cable, cable terminals, drop wire, and inside wire which may eventually affect subscriber service. The tests are controlled either by the local maintenance force or by remote control from a local test center. The test control circuit connects the test circuit successively to the subscriber lines skipping busy lines and other lines which may produce false indications or cause service interference. The test equipment stops automatically upon completion of the test cycle or when the traffic load in the office requires the use of the equipment temporarily assigned for line insulation testing. When the test control equipment locates a line that fails to meet the test condition, a record is made of the line and the test condition under which the line failed. Line locations are successively generated in the test control circuit for connecting the test circuit to the line. Any line that is found busy as well as lines assigned to toll trunks, dial PBX, test lines or other uses which would give a false trouble indication or service interference are skipped by the line insulation test control circuit. The speed of testing is approximately 12,000 lines per hour. The line insulation test frame can be started by operating keys at the test frame or from the local test desk through the test trunk and selector circuit. Access to the line link frames of crossbar offices is obtained through one of the marker multiples and the no test connector. Access to the lines of step-by-step offices is obtained through the test distributor and test connector.

TCI Library: www.telephonecollectors.info

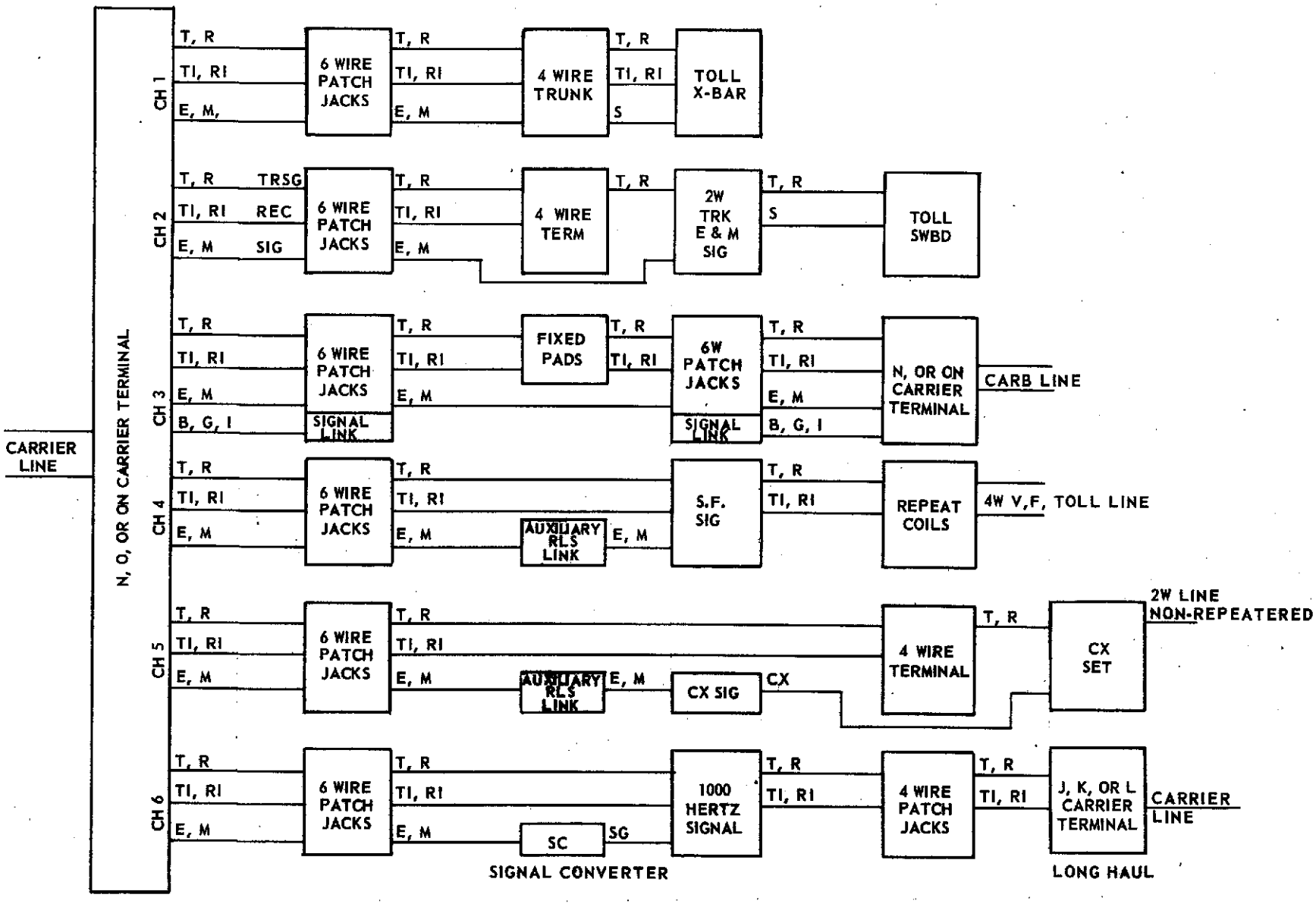

Figure 19-18 Connections at a Six-Wire Voice Frequency Patch Bay

TCI Library: www.telephonecollectors.info

19.6 VOICE FREQUENCY PATCHING BAYS

The voice frequency (V.F.) side of the various short-haul carrier systems may connect through six-wire voice frequency patch jacks to the assigned V.F. facilities. At the six-wire (6W) patch jacks, access to the carrier channel equipment and the V.F. equipment, or the segregation of the two equipments, may be made. The six-wire voice frequency patch bay provides a centralized monitoring, level measuring, signal testing, and patching position for the carrier system.

Figure 19-18 shows a block schematic of the connections of various types of V.F. equipment through 6W patch jacks to a carrier system. The connections as shown, illustrates the variation of facility assignment to a carrier system and does not represent a typical assignment. Channel 1 provides a line circuit for a trunk connecting to a toll crossbar switching system. Channel 2 provides a line circuit for a trunk connecting to a toll switchboard. Channel 3 shows a through connection from one carrier system to Channel 1 of another carrier system. Fixed pads, which are part of the six-wire patch bay equipment, are used to adjust the output level of one carrier system to the input level of the other carrier system. Signal link jacks and lamps, and a turn-over in the cross connection of E and M leads, are necessary to connect the signaling leads of one system to the signaling leads of the other system. Channel 4 is connected through to a 4W toll line, which is arranged for single-frequency signaling at the distant end. The toll terminal equipment necessary to connect to the carrier system is also indicated. Channel 5 is a similar arrangement that connects to a 2W V.F. line, which is arranged for composite signaling at the distant end. Channel 6 is a through connection to a carrier system which does not have built-in signaling. Toll terminal signaling equipment is provided on the J, K, and L carrier system.

Four-wire terminating sets or hybrids are provided in the channel units of the short-haul carrier systems. When the carrier system is connected through 6W patch jacks, the terminating sets or hybrids are not used.

The 6W patch bay monitoring and test equipment is shown in Figure 19-19. A voice frequency amplifier and telephone set are provided for monitoring and talking on carrier

TCI Library: www.telephonecollectors.info

channels and for use with order wires and local trunks that are provided at the 6W patch bay. A common transmission and noise measuring system is provided per line-up or group of bays and a 1000 Hertz, one milliwatt, signal is provided as a standard level test signal. A Transmission Measuring Set (T.M.S.) circuit that contains position control relays, an amplifier-rectifier, and a projection type DB meter is used to measure a change in level of the MW signal after it has been transmitted through either the carrier facility or the V.F. facility. A patch to DEM OUT (Demodulator Out) and MOD IN (Modulator In) jacks disconnects the carrier channel from the V.F. facility and provides a test connection to the carrier channel. A patch to EQ OUT (Equalizer Out) and EQ IN (Equalizer In) jacks disconnects the V.F. facility from the carrier facility and provides a test connection to the V.F. facility. An auxiliary T.M.S. meter, under the control of a key, may be provided at the location of the carrier equipment. With it, levels adjustments may be made on the carrier equipment while the results are observed on the meter. Additional patch and test jacks, for program equipment assigned to carrier channels, may be provided at the 6W patch bay. These jacks are cross connected to the two-wire V.F. program equipment so that level measurements may be at this point. Reversing of the program equipment may be controlled by a test jack at the 6W patch bay. Testing of the channel or V.F. signaling circuits, and spare signaling circuits terminated on jacks at the 6W patch bays, is accomplished by the use of portable signal test sets. Signal test battery supplies are provided at the bays.

Although the foregoing deals with the 6 wire Voice Frequency Patch Bay other patching bays exist such as the 4 wire V.F. Patch Bay, which is similar but doesn't use the E & M lead (signaling) jacks. High-frequency patch bays are used at intermediate or end points in carrier systems as the voice-frequency is only modulated in steps up to the line frequency.

TCI Library: www.telephonecollectors.info

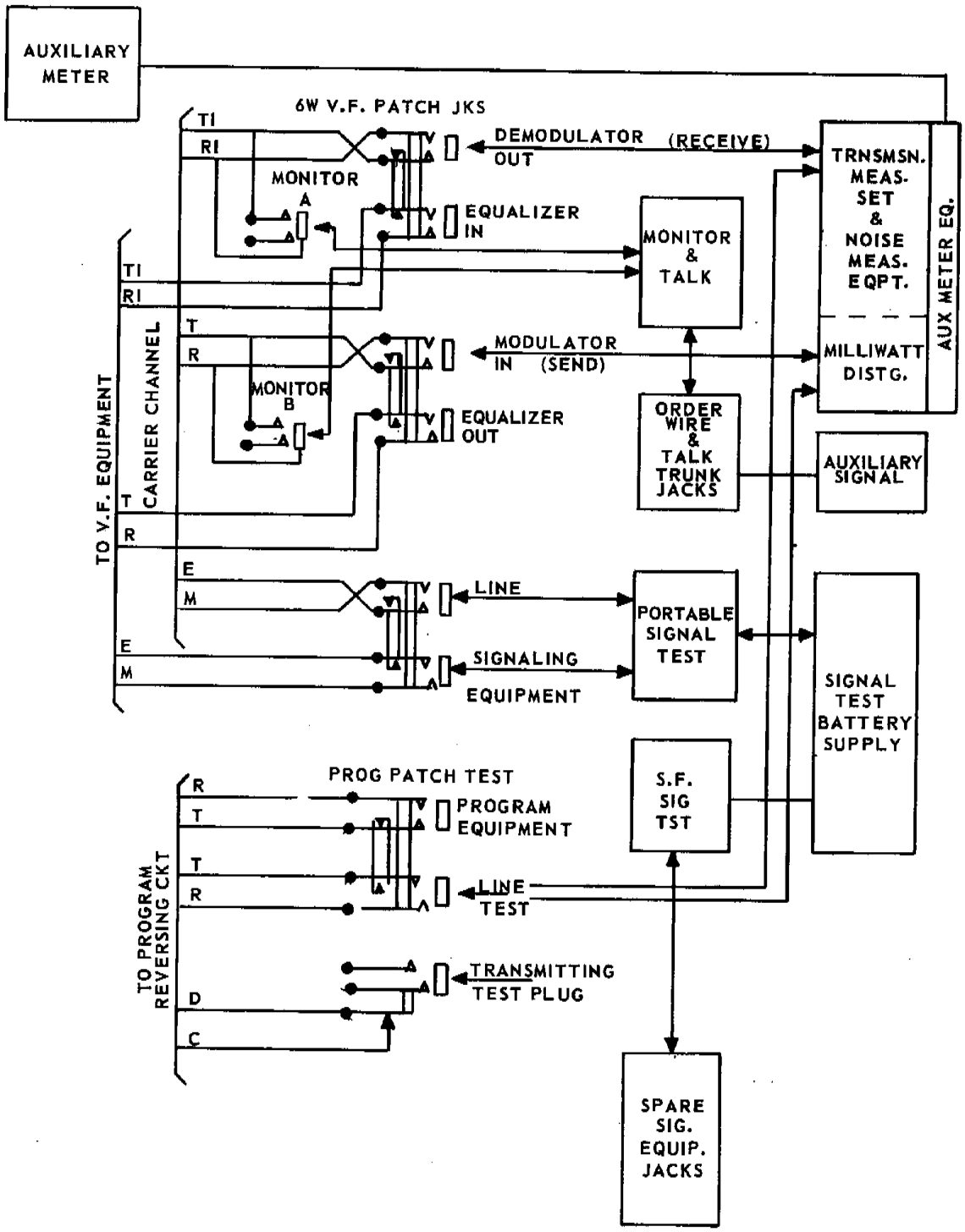

Figure 19-19 Test Equipment at a 6 Wire Voice Frequency Patch Bay

TCI Library: www.telephonecollectors.info